Laboratory Manual

CORE PRACTICAL 5: Introduction to Python (21BMTCC505)

B.Sc. Mathematics-Semester

Department of Mathematics

ATMIYA UNIVERSITY

(Established under the Gujarat Private University Act 11, 2018)

Yogidham Gurukul, Kalawad Road, Rajkot - 360005, Gujarat

Atmiya University Rajkot

CERTIFICATE

This is to certify that Mr./Ms. << STUDENT NAME>> Enrolment No. <<EN NO>>

Branch << BRANCH NAME>> Semester 6th Division << DIV >> has satisfactorily completed his/her term work in the Subject of **Introduction to Python (21BMTCC505)** within the four walls of the institute.

Date of Submission: << DD/MM/YYYY>>

<< SIGNATURE >>
Subject – in – Charge

<< SIGNATURE >>
Head of Dept.

Atmiya University Rajkot

+91 281 2563445 +91 281 2563952 admin@atmiyauni.ac.in www.atmiyauni.ac.in

REVISIONHISTORY

VERSION	DATE	AUTHOR	REVISIONSUMMARY
1	01/07/2023	Mrs. Nisha K.. Nesadia Assistant Professor Deptartment. of Mathematics	1st Edition

INDEX

Sr No.	Name of Experiment	Page No	Date of Submission	Grade	Sign
1	1.1 Installation & Setup of Python and any Framework (Pycharm etc.) 1.2 Write a program to pint Hello World on screen. 1.3 Write Python programs to demonstrate the following: ii) input ii) 'end'		<<DD/MM/YYYY>>	<GRADE>	<< SIGN >>
2	2.1Write a program to check entered number is even-odd. 2.2 Demonstrate the following control transfer statements in Python with suitable examples: i) break ii) continue iii) pass.		<<DD/MM/YYYY>>	<GRADE>	<< SIGN >>
3	3.1 Write a program to find maximum and minimum from 3 entered numbers. 3.2 Write a program to print sum of first 50 numbers with different loops.		<<DD/MM/YYYY>>	<GRADE>	<< SIGN >>
4	4.1 Write Python programs to print the following Patterns: * * * * * * * * * * * * * * * 4.2 Write Python programs to print the following Patterns: * * * * * * * * * * * * * * *		<<DD/MM/YYYY>>	<GRADE>	<< SIGN >>

+91 281 2563445 +91 281 2563952 admin@atmiyauni.ac.in www.atmiyauni.ac.in
Atmiya University Rajkot

Sr No.	Name of Experiment	Page No	Date of Submission	Grade	Sign
5	5.1 Write a program to perform searching and sorting in given list. 5.2 Write a program to learn different types of structures (list, dictionary, tuple) in python. Display all information of student.		<<DD/MM/YYYY>>	<GRADE>	<< SIGN >>
6	6.1 Write a program using user define function to print factorial series. 6.2 Write a program using user define function to print Fibonacci series.		<<DD/MM/YYYY>>	<GRADE>	<< SIGN >>
7	Write a program to understand working of exception handling and assertions. 7.1 Handle divide by zero exception. 7.2 Handle any user define exception.		<<DD/MM/YYYY>>	<GRADE>	<< SIGN >>
8	Write following programs using regular expressions: 8.1 (i) Character Only (ii) Mobile number only 8.2 Regular expression for email like. [a-z].[az]@[a-z].domainname ("@" not be repeated and last "." not repeated).		<<DD/MM/YYYY>>	<GRADE>	<< SIGN >>
9	9.1 Demonstrate the following functions/methods which operates on strings in Python with suitable examples: • count( ) • replace( ) • split( ) • join( ) • upper( ) • len( )		<<DD/MM/YYYY>>	<GRADE>	<< SIGN >>
10	10.1 Write a Python program to demonstrate Local and Global variables.		<<DD/MM/YYYY>>	<GRADE>	<< SIGN >>
11	11.1 Write a program to demonstrate use of all types of inheritance by using simple example.		<<DD/MM/YYYY>>	<GRADE>	<< SIGN >>
12	12.1 Write a program to demonstrate file handling. 12.2 Write a program to create a file of random numbers then separate even and odd numbers in separate file.		<<DD/MM/YYYY>>	<GRADE>	<< SIGN >>

+91 281 2563445 +91 281 2563952 admin@atmiyauni.ac.in www.atmiyauni.ac.in

13	13.1 Plot graph of result of student (Name vs. Percentage, Subject vs. Percentage, Pass vs. Fail) using Pyplot.		<<DD/MM/YYYY>>	<GRADE>	<< SIGN >>
14	14.1 Draw graphics Smiley using Turtle.				
15	15.1 Write a program to create three push buttons using tkinter. Background color of a frame should be changed when different buttons are clicked.		<<DD/MM/YYYY>>	<GRADE>	<< SIGN >>

+91 281 2563445 +91 281 2563952 admin@atmiyauni.ac.in www.atmiyauni.ac.in
Atmiya University Rajkot

1.2 Write a program to print Hello World on screen.

```
print("Hello world")
```

Output

```
Hello world
```

1.3 Write Python programs to demonstrate the following:
i) input ii) 'end'

i)

```
x=input('Nisha')
```

Output

```
Nisha
```

ii)

```
for i in range(1,10):
        print(i)
```

Output

```
1
2
3
4
5
6
7
8
9
```

```
for i in range(1,10):
        print(i,end=" ")
```

Output

```
1 2 3 4 5 6 7 8 9
```


+91 281 2563445 +91 281 2563952 admin@atmiyauni.ac.in www.atmiyauni.ac.in
Atmiya University Rajkot

2.1Write a program to check entered number is even-odd.

```
num = int(input("Enter a number: "))
if (num % 2) == 0:
   print("{0} is Even".format(num))
else:
   print("{0} is Odd".format(num))
```

Output

```
Enter a number: 5
5 is Odd
```

2.2 Demonstrate the following control transfer statements in Python with suitable examples: i) break ii) continue iii) pass.

i) break

```
stock=5
x=int(input("How many cholates you want?"))
i=1
while i<=x:
    if i>stock:
        print("out of stock")
        break
    print("Chocolate")
    i=i+1
```

Output

How many cholates you want?6
Chocolate
Chocolate
Chocolate
Chocolate

+91 281 2563445 +91 281 2563952 admin@atmiyauni.ac.in www.atmiyauni.ac.in
Atmiya University Rajkot

Chocolate
out of stock

ii) continue

```
for i in range(1,10):
   if(i%2!=0):
      continue
   else:
      print(i)
```

Output

2
4
6
8

iii) pass

```
for i in range(1,10):
   if(i%2!=0):
      pass
   else:
      print(i)
```

Output

2
4
6
8

3.1 Write a program to find maximum and minimum from 3 entered numbers.

Maximum

```
a=int(input("Enter variable a="))
b=int(input("Enter variable b="))
c=int(input("Enter variable c="))

if(a>b and a>c):
```


+91 281 2563445 +91 281 2563952 admin@atmiyauni.ac.in www.atmiyauni.ac.in
Atmiya University Rajkot

```
    print(" {} is > than {} and {} ".format(a,b,c))
elif(b>a and b>c):
    print(" {} is > than {} and {} ".format(b,a,c))
else:
    print(" {} is > than {} and {} ".format(c, a, b))
```

Output

```
Enter variable a=10
Enter variable b=20
Enter variable c=30
 30 is > than 10 and 20
```

Minimum

```
a=int(input("Enter variable a="))
b=int(input("Enter variable b="))
c=int(input("Enter variable c="))

if(a<b and a<c):
print(" {} is < than {} and {} ".format(a,b,c))
elif(b<a and b<c):
print(" {} is < than {} and {} ".format(b,a,c))
else:
print(" {} is < than {} and {} ".format(c, a, b))
```

Output

```
Enter variable a=10
Enter variable b=20
Enter variable c=30
10 is < than 20 and 30
```

3.2 Write a program to print sum of first 50 numbers with different loops.

Using For loop

```
sum=0
for i in range(1,6):
    sum=sum+i
```


+91 281 2563445 +91 281 2563952 admin@atmiyauni.ac.in www.atmiyauni.ac.in
Atmiya University Rajkot

```
print("sum=",sum)
```

Output

```
sum= 15
```

Using While loop

```
sum=0
i=0
while(i<6):
   sum=sum+i
   i=i+1

print("sum=",sum)
```

Output

```
sum= 15
```

4.1 Write Python programs to print the following Patterns:

```
*
* *
* * *
* * * *
* * * * *
```

```
n=6
for i in range(0,n):
        for j in range(0,i+1):
                print("*" ,end = "")
        print("\r")
```

Output

```
*
```


+91 281 2563445 +91 281 2563952 admin@atmiyauni.ac.in www.atmiyauni.ac.in
Atmiya University Rajkot

```
**

***

****

*****

******
```

4.2 Write Python programs to print the following Patterns:

```
        *
      *  *
    *  *  *
  *  *  *  *
*  *  *  *  *
```

```
n=5
print("pattern")
for i in range(0,n):
        for j in range(i,n):
                print(" " ,end = " ")
        for j in range(0,i+1):
                print("*",end = " ")
        print("\r")
```

Output

```
pattern
        *

      * *

    * * *

  * * * *

* * * * *
```


+91 281 2563445 +91 281 2563952 admin@atmiyauni.ac.in www.atmiyauni.ac.in
Atmiya University Rajkot

5.1 Write a program to perform searching and sorting in given list.

```
def  linearsearch(arr, x):
   for i in range(len(arr)):
      if arr[i] == x:
         return i
   return -1
arr = ['t','u','t','o','r','i','a','l']
x = 'a'
print("element found at index "+str(linearsearch(arr,x)))
```

Output

element found at index 6

5.2 Write a program to learn different types of structures (list, dictionary, tuple) in python. Display all information of student.

```
Import struct
print(struct.pack('14s i', b'Tutorialspoint', 2020))
print(struct.pack('i i f 3s', 1, 2, 3.5, b'abc'))
```

```
list1=['hello','world']
print(list1)
list2=[2,3,4,5,6,7]
print(list2)
list2[0:2]
list2.append
list2.append([10,30,20])
```

```
tuple=(123,'hello')
print(tuple)
tup=(1,2,3,4)
 tup
tup[1]
tuple[1]
print(tuple[1])
```


+91 281 2563445 +91 281 2563952 admin@atmiyauni.ac.in www.atmiyauni.ac.in
Atmiya University Rajkot

```
list = ['a',10,'b',0.4,True]
print("List:", list)
tuple = ('a',10,'b',0.4,True)
print("Tuple:", tuple)
dictionary = {'a':True,10:'Ten'}
print("Dictionary:", dictionary)
```

Output

```
['hello', 'world']
[2, 3, 4, 5, 6, 7]
[2, 3]
[2,3,4,5,6,7,[10,20,30]]

(123, 'hello')
(1, 2, 3, 4)
2
'hello'
hello

List: ['a', 10, 'b', 0.4, True]
Tuple: ('a', 10, 'b', 0.4, True)
Dictionary: {'a': True, 10: 'Ten'}
```

6.1 Write a program using user define function to print factorial series.

```
def factorial(n):
    if(n==1 or n==0):
        return 1
    else:
        return (n * factorial(n - 1))
num = int(input("Enter any number"))
print("number : ",num)
print("Factorial : ",factorial(num))
```

Output

```
Number :  5
```


+91 281 2563445 +91 281 2563952 admin@atmiyauni.ac.in www.atmiyauni.ac.in
Atmiya University Rajkot

Factorial : 120

6.2 Write a program using user define function to print fibonacci series.

```
def fb(nterm):
    n1,n2=0,1
    count=0
    if nterm<=0:
        print("Enter positive number")
    elif nterm==1:
        print("fibonacci series=")
        print(n1)
    else:
        print("fibonacci series=")
        while count<nterm:
            print(n1)
            next_num=n1+n2
            n1=n2
            n2=next_num
            count=count+1
nterm=int(input("How many terms?="))
fb(nterm)
```

Output

```
How many terms? 5
fibonacci series=
0
1
1
2
3
```

7.1 Handle divide by zero exception.

a=6

+91 281 2563445 +91 281 2563952 admin@atmiyauni.ac.in www.atmiyauni.ac.in
Atmiya University Rajkot

```
b=0

try:
   print(a/b)
except ZeroDivisionError as e:
   print(e)
finally:
   print("Exception handled successfully")
```

Output

```
division by zero
Exception handled successfully
```

7.2 Handle any user define exception.

```
class VoterAgeCheck(Exception):
   def __init__(self):
      super()
try:
   if age<18:
      raise VoterAgeCheck
except VoterAgeCheck:
   print("your age less than 18")
finally:
   print("This is example of User defined exception")
```

Output

```
enter your age=12
your age less than 18
This is example of User defined exception
```

8. Write following programs using regular expressions:

8.1 character

```
import re as re
str="this is atmiya university time and 6th semester lecture starts from morning 7:30 to 1:30"
```


+91 281 2563445 +91 281 2563952 admin@atmiyauni.ac.in www.atmiyauni.ac.in
Atmiya University Rajkot

```
x=re.findall('\D+',str)
print(x)
```

Output

['this is atmiya university time and ', 'th semester lecture starts from morning ', ':', ' to ', ':']

8.2 Regular expression for email like. [a-z].[az]@[a-z].domainname ("@" not be repeated and last "." not repeated). Extract email from text

```
import re
txt=' this is my email abc.xyz@gmail.com
myemail=re.findall('[\w\.-]+@[\w\.-]+',txt)
print(myemail)
```

Output

abc.xyz@gmail.com

9.1 Demonstrate the following functions/methods which operates on strings in Python with suitable examples:

- **count( )**
- **replace( )**
- **split( )**
- **join( )**
- **upper( )**
- **len( )**

- **count( )**

```
aList = [123, 'xyz', 'zara', 'abc', 123];
print "Count for 123 : ", aList.count(123)
print "Count for zara : ", aList.count('zara')
```

Output

```
Count for 123 :  2
Count for zara :  1
```


+91 281 2563445 +91 281 2563952 admin@atmiyauni.ac.in www.atmiyauni.ac.in
Atmiya University Rajkot

10.1 Write a Python program to demonstrate Local and Global variables.

11.1 Write a program to demonstrate use of inheritance by using simple example.

```
class Animal:
    def speak(self):
        print("Animal Speaking")
#child class Dog inherits the base class Animal
class Dog(Animal):
    def bark(self):
        print("dog barking")
d = Dog()
d.bark()
d.speak()
```

Output

```
dog barking
Animal Speaking
```

12.1 Write a program to demonstrate file handling.

```
f1=open('file1.txt','r')
f2=open('file2.txt','r+')
for i in f1:
    f2.write(i.upper())
print(f2.read())
f2.close()
```

Output

```
CONVERT THIS TEXT INTO UPPER
```


+91 281 2563445 +91 281 2563952 admin@atmiyauni.ac.in www.atmiyauni.ac.in
Atmiya University Rajkot

file1.txt content	File2.txt content
convert this text into upper	CONVERT THIS TEXT INTO UPPER

12.2 Write a program to create a file of random numbers then separate even and odd numbers in separate file.

```
f1=open("file1.txt",'w')
n=int(input("enter how many numbers you want to filter in odd & Even="))
for i in range(1,n+1):
   print("enter number ",i," =",end="")
   f1.write(input()+"\n")

f2=open("odd.txt",'w+')
f3=open("even.txt",'w+')
f2.write("List of odd numbers\n")
f3.write("List of even numbers\n")

f1=open("file1.txt",'r')
for i in f1:
   if int(i)%2==0:
      f2.write(i)
   else:
      f3.write(i)
print("Successfully filtered odd and even numbers")
```

Output

```
enter how many numbers you want to filter in odd & Even=5
enter number  1  =10
enter number  2  =5
enter number  3  =63
enter number  4  =2
enter number  5  =7
```


+91 281 2563445 +91 281 2563952 admin@atmiyauni.ac.in www.atmiyauni.ac.in
Atmiya University Rajkot

Successfully filtered odd and even numbers

file1.txt content	odd.txt content	even.txt content
10 5 63 2 7	List of odd numbers 10 2	List of even numbers 5 63 7

13.1 Plot graph of result of student (Name vs. Percentage, Subject vs. Percentage, Pass vs. Fail) using Pyplot.

```
import matplotlib.pyplot as plt
# x-coordinates of left sides of bars
left = [1, 2, 3,]

# heights of bars
height = [80, 24, 50,]
# labels for bars
tick_label = ['Sanjay', 'Vijay', 'Rajesh',]
# plotting a bar chart
plt.bar(left, height, tick_label = tick_label,
        width = 0.8, color = ['red', 'green'])

# naming the x-axis
plt.xlabel('Student Name')
# naming the y-axis
plt.ylabel('Marks')
# plot title
plt.title('Maths Result')

# function to show the plot
plt.show()
```

Output

+91 281 2563445 +91 281 2563952 admin@atmiyauni.ac.in www.atmiyauni.ac.in
Atmiya University Rajkot

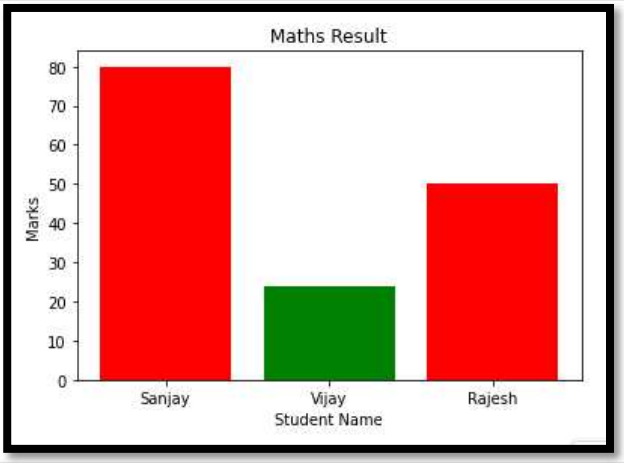

14.1 Draw graphics Smiley using Turtle.

```
import turtle
pen = turtle.Turtle()
# function for creation of eye
def eye(col, rad):
        pen.down()
        pen.fillcolor(col)
        pen.begin_fill()
        pen.circle(rad)
        pen.end_fill()
        pen.up()
# draw face
pen.fillcolor('yellow')
pen.begin_fill()
pen.circle(100)
pen.end_fill()
pen.up()
# draw eyes
pen.goto(-40, 120)
eye('white', 15)
pen.goto(40, 120)
eye('white', 15)
# draw mouth
pen.goto(-40, 85)
```

```
pen.down()
pen.right(90)
pen.circle(40, 180)
pen.up()
pen.end_fill()
pen.hideturtle()
```

Output

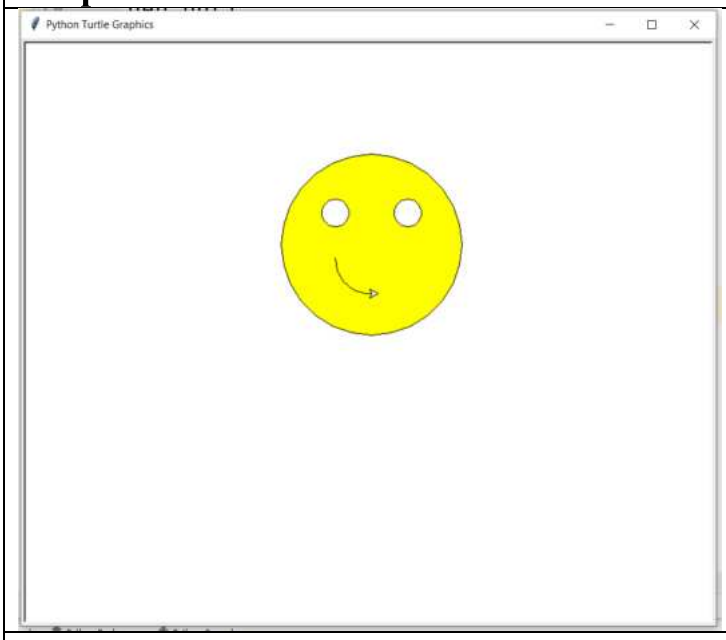

15.1 Write a program to create push buttons using tkinter. Background color of a frame should be changed when buttons are clicked.

```
from tkinter import *
gui = Tk(className='Python Examples - Window Color')
gui.geometry("400x200")
#set window color
bg_clr="white"
gui.configure(bg=bg_clr)

def change_clr_blue():
bg_clr="blue"
gui.configure(bg=bg_clr)

def change_clr_red():
```

```
bg_clr="red"
gui.configure(bg=bg_clr)

def change_clr_green():
bg_clr="green"
gui.configure(bg=bg_clr)

btn=Button(gui, text="click me to make background color to blue",
fg='blue',command=change_clr_blue).pack()
btn=Button(gui, text="click me to make background color to red",
fg='red',command=change_clr_red).pack()
btn=Button(gui, text="click me to make background color to green",
fg='green',command=change_clr_green).pack()

gui.mainloop()
```

output

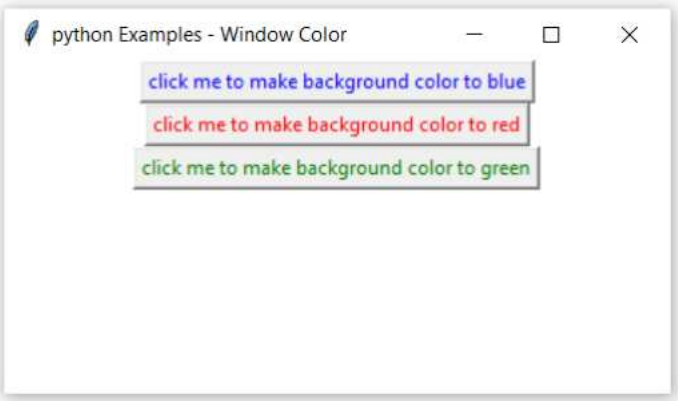

On blue btn click

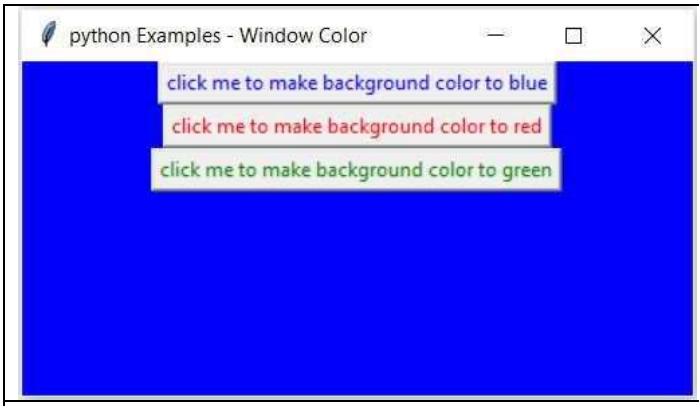

On greenbtn click

Extra Practicals:

for i in range(0,n): for j in range(i,n): print(" *" ,end = "") print("\r")	* *
for i in range(0,n): for j in range(0,i+1):	*

+91 281 2563445 +91 281 2563952 admin@atmiyauni.ac.in www.atmiyauni.ac.in
Atmiya University Rajkot

print("",end = "") for j in range(i,n): print("*",end = "") print("\r")	** *** **** ***** ******
n=6 for i in range(0,n): for j in range(0,i+1): print("*" ,end = "") print("\r") for i in range(0,n): for j in range(i,n): print(" *" ,end = "") print("\r") for i in range(0,n): for j in range(i,n): print(" " ,end = "") for j in range(0,i+1): print("*",end = "") print("\r") for i in range(0,n): for j in range(0,i+1): print("",end = "") for j in range(i,n): print("*",end = "") print("\r") for i in range(0,n): for j in range(i,n): print(" " ,end = "") for j in range(0,i+1): print("*",end = "")	* ** *** **** ***** ****** *

+91 281 2563445 +91 281 2563952 admin@atmiyauni.ac.in www.atmiyauni.ac.in
Atmiya University Rajkot

```
        for j in range(0,i+1):
                print("*",end = "")
        print("\r")
for i in range(0,n):
        for j in range(i,n):
                print(" " ,end = "")
        for j in range(0,i):
                print("*",end = "")
        for j in range(0,i+1):
                print("*",end = "")
        print("\r")
for i in range(0,n):
        for j in range(0,i+1):
                print(" " ,end = "")
        for j in range(i,n-1):
                print("*",end = "")
        for j in range(i,n):
                print("*",end = "")
        print("\r")
for i in range(0,n):
        for j in range(i+1):
                print( i+1,end = "")
        print("\r")
for i in range(0,n):
        for j in range(0,i+1):
                print(" " ,end = "")
        for j in range(i,n-1):
                print(i,end = "")
        for j in range(i,n):
                print(i,end = "")
        print("\r")
for i in range(0,n):
        for j in range(i+1):
                print( i,end = "")
        print("\r")
```

```
  **
 ***
****
*****
******

******
*****
****
***
**
*

   **
  ****
 ******
********
**********
***********
```


+91 281 2563445 +91 281 2563952 admin@atmiyauni.ac.in www.atmiyauni.ac.in
Atmiya University Rajkot

	* *** ***** ******* ********* ********** ********** ********* ******* ***** *** * 1 22 333 4444 55555

+91 281 2563445 +91 281 2563952 admin@atmiyauni.ac.in www.atmiyauni.ac.in
Atmiya University Rajkot

	666666 00000000000 111111111 2222222 33333 444 5 0 11 222 3333 44444 555555 > > > > > > > > > >

*****

~ INDEX ~

UNIT	UNIT NAME	PAGE NO
1	**Pre-Programming Techniques & Introduction to C**	**01**
	What is Program?	01
	Pre Programming Tools	01
	What is Language?	07
	Language Translators	07
	C Character Set	08
	C-Tokens (Keywords, Identifiers, Constants, Strings, Special Symbols, Operators)	09
	Variable	16
	Data Types	18
	Basic Structure of C Program	20
	• *Question Bank*	25
2	**Control Structure**	**28**
	Control Structure (Decision Making Statements)	28
	(A) Forms of if	28
	(B) Switch Case	37
	(C) Conditional Operator	40
	(D) Goto Statement	41
	Looping Structure (while, do…while, for statement)	42
	Break & Continue Statement	47
	• *Question Bank*	49
3	**Functions (UDF & In-built)**	**51**
	What is Function?	51
	Built-in Function	51
	User Defined Function (UDF)	62
	Array as a function argument	67
	Recursion	68
	• *Question Bank*	69
4	**Array**	**71**
	Introduction	71
	Types of an Array	71
	Character Array	75
	String Functions	78
	Two-dimensional Character Array	80
	• *Question Bank*	82
5	**Structure & Union**	**83**
	What is Structure?	83
	Accessing members of Structure	84
	Array of Structure	85
	Structure as a function argument	85
	Union	86
	Differences between Structure and Union	87
	Differences between Array and Structure	88
	• *Question Bank*	89

Atmiya University Rajkot

Atmiya University
Rajkot

UNIT – 1

Pre-Programming Techniques & Introduction to C

What is Program?

A program is a specific set of ordered operations for a computer to perform a specific task. The computer gets one instruction and performs it and then gets the next instruction. The storage area or memory can also contain the data that the instruction operates on. Note that a program is also a special kind of data that indicates how to operate on application or user data.

Pre-programming Techniques:

The techniques which are used to solve any problem definition by analyzing any problem are known as pre-programming techniques. The pre-programming tools are used to analyze and make some decision about the problem.

Pre-Programming Tools:

There are two pre-programming tools which are helpful to analyze the problem & to take decisions about the problem.

1) Flow Charts
2) Algorithms

(1) Flow Charts:

We all know that to represent anything the "Graphical Method" is the best way. The graphical (pictorial) representation of any problem is known as "Flow Chart". In Flowcharts, the decisions & results of the decisions are mapped out in individual shapes. It is also referred to as "Blue Print" or "Diagrammatic Representation" of any problem/algorithm. It shows a flow of logic involved in solving a problem.

How Flow Charts are useful?

- ✓ They represent the data flow.
- ✓ They show all major elements & their relationships.
- ✓ They give the visual layout of the program.
- ✓ They provide a clear overview of the entire problem & its solution.

Rules to draw a flowchart:

- ✓ Use the symbols as they are designed to be used.
- ✓ Be consistent in the use of the symbols.
- ✓ Be sure that meaning is clear, both in the way you draw the flowchart & in the entries you make within the symbol.

Atmiya University Rajkot

- **The symbols which are used to draw a flow chart are as given below:**

Name	Symbol	Task/Function
Oval	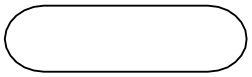	Indicates starting and ending points of the flowchart. This symbol may contain the words like Start, Begin, Stop, End Etc.
Parallelogram	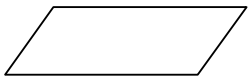	Used to indicate Input/output in flowchart.
Rectangle	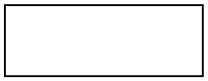	Used to indicate the Process part in flowchart. Also used to declare the variables.
Diamond	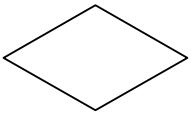	Used to indicate condition for Decision making. This symbol always contains the conditions or expressions.
Arrows	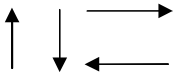	Used to Indicate the control flow of the flowchart. Generally, the flow of control may be top to bottom or left to right.
On Page Connector	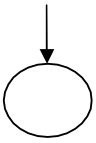	Used to connect multi way flow of the control & direct the control to the particular point.
Off Page Connector	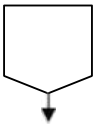	Used to show off page connectivity in flowchart.

Examples of Simple Flowchart

Flowchart 1: A Flowchart that print the simple message.

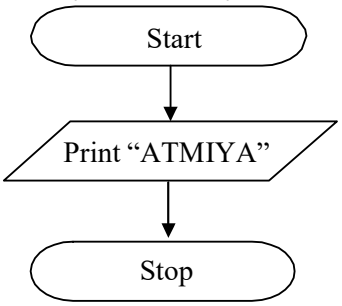

- **Concept of Variable & Constant:**

Variable:

A variable is a name given to the memory location. During the execution of the program the value of the variable will be changed or altered.

Constant:

A constant is a value which is stored inside the variable. In short, they are the fixed values.

For e.g.:

3a + 5b in this equation, a & b are variables and 3 & 5 are constants.

Flowchart 2: A Flowchart to input two numbers and print sum as an output.

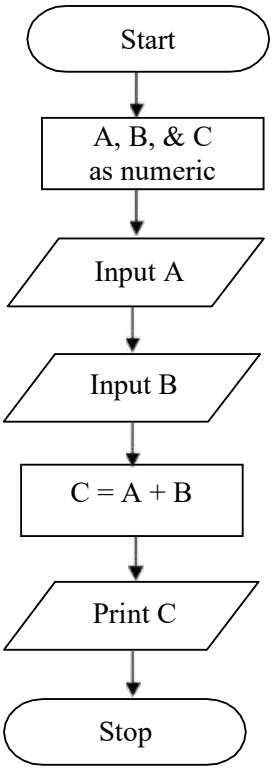

Atmiya University Rajkot

- **Examples of Conditional Flowchart**

Flowchart 3: A flowchart to check whether the no. is odd or even.

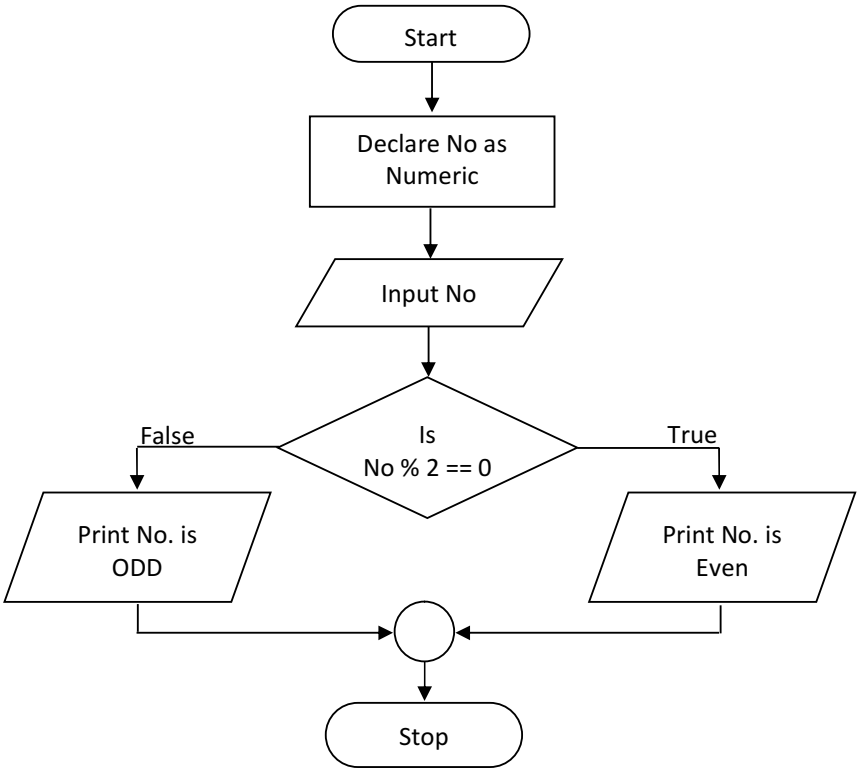

Flowchart 4: A flowchart to find out maximum value from two values.

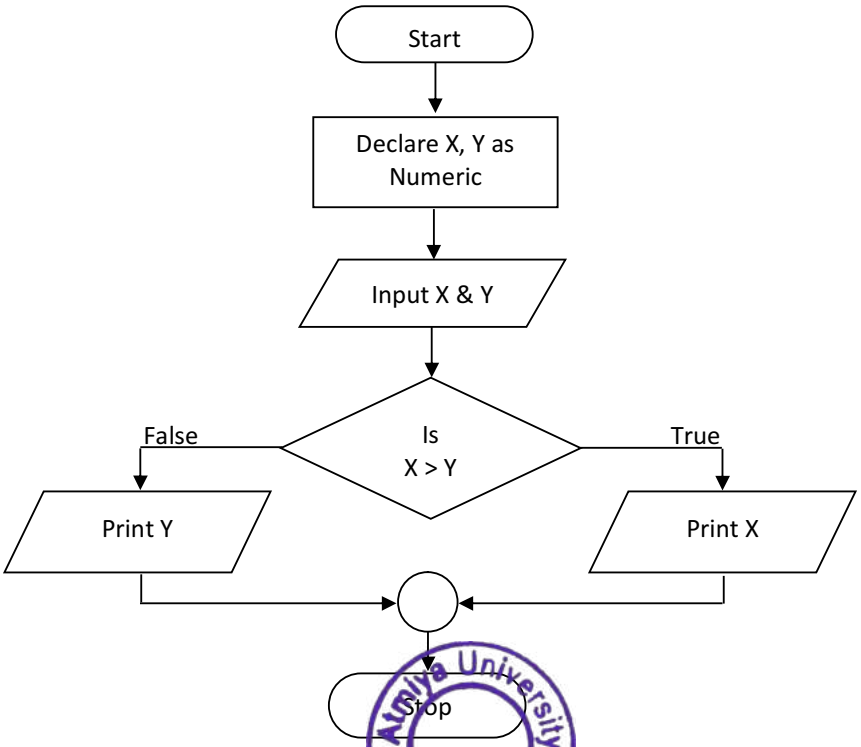

Atmiya University Rajkot

- **Example of Looping (Iterative Flowchart)**

Flowchart 5: A flowchart to print 1 to 10 numbers.

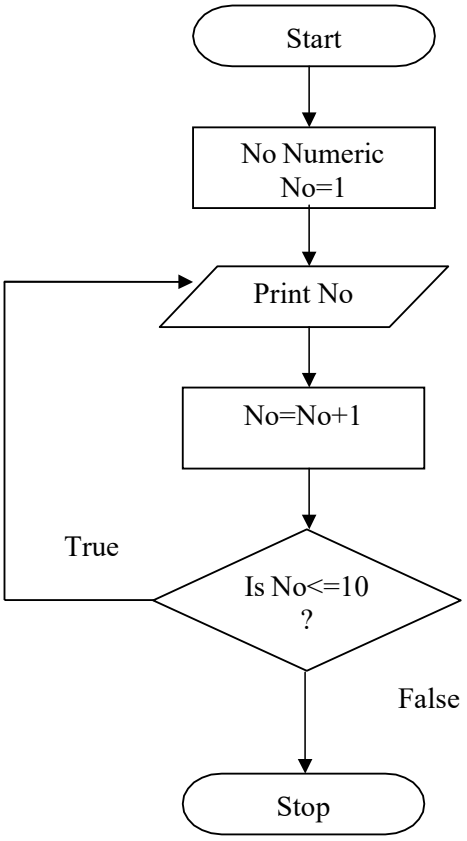

(2) Algorithms:

- An algorithm is a list of instructions, procedures or formulas used to solve a problem.
- An algorithm is a step-by-step representation to solve any problem.
- Algorithms are just the textual presentation of the flowchart.
- It consists of English like statements. Each statement must be precise and well- defined to perform a specific operation. When these statements are executed for a given set of conditions, they will produce the required results.

Algorithmic Notation:

- While writing algorithms the following notations are considered.

Name of the algorithm:

- It specifies the problem to be solved.

Step Number:

- Identification tag of an instruction and it is an unsigned positive integer.

Termination:

- It specifies the end of the algorithm. It is generally a STOP statement and the last instruction in the algorithm.

Atmiya University Rajkot

Facilities Provided by Algorithms:

- It makes the program easy-to-read and understands.
- It makes the program portable & efficient.
- It displays easy steps for processing
- It simplifies the modification & updating the existing program.
- It facilitates testing of program at development stage.

Algorithm 1: An algorithm to print message on the screen.

Step 1: Begin
Step 2: Print "Atmiya"
Step 3: End

Algorithm 2: An Algorithm to add two numbers.

Step 1: Begin
Step 2: Declare the variables a, b & c as numeric
Step 3: Input the value of a
Step 4: Input the value of b
Step 5: add the values of variable a & b and assign the answer in variable c
Step 6: print c Step 7: End

Algorithm 3: An Algorithm to check whether the no. is ODD or EVEN.

Step 1: Begin
Step 2: Declare the variable No as Numeric
Step 3: Input the value of No
Step 4: Divide the No with 2 and check the reminder, if reminder is 0 then goto step 5 otherwise goto step 6
Step 5: print "No. is Even", goto step 7
Step 6: print "No. is Odd"
Step 7: End

OR

Step 1: Begin
Step 2: Declare the variable No as Numeric
Step 3: Input the value of No
Step 4: if a%2 == 0 then Print "No. is Odd" and goto step 5 else print "No. is Even"
Step 5: End

Algorithm 4: An Algorithm to find out maximum no. from given two numbers.

Step 1: Begin
Step 2: Declare the variables a & b as numeric
Step 3: Input the value of a
Step 4: Input the value of b
Step 5: if a>b then Print the value of a and goto step 6
Else print the value of b
Step 6: End

Atmiya University Rajkot

Introduction to C

What is Language?

- We can simply define a Language as a medium of Communication and it is a collection of alphabets and symbols.
- In our real life, the main purpose of the language is communication, not more than it. And we all know that the proper communication is only possible if both the sides the language is well understood.
- So, if we want to perform our task on a computer, we should have clear idea about the language of computer. (That means if we want to communicate with computer!)
- By using the language of computer, one can perform his/her task on a computer in form of Program.
- A Computer language is just a collection of some keywords and identifiers and with the help of this, a communication is possible between two peripherals of computer, two computers and in between computer and a user.
- And here we have to learn 'C Language' as a first computer programming language.

What is C Language?

- C is a Programming Language.
- Developed By Dennis Ritchie.
- In the year 1972.
- At the place AT & T's Bell Laboratory, USA.

History of C Language:

The short chart representation of this history is as given below:

Year	Language	Developed By	Description
1960	ALGOL	International Committee	Root of all modern Languages.
1963	CPL (Combined Programming Language)	Cambridge University	It was hard to learn and difficult to learn.
1967	BCPL (Basic Combined Programming Language)	Martin Richards at Cambridge University	Developed for writing system software. Less Powerful.
1970	B	Ken Thompson	Used to create early version of UNIX operating system.
1972	C	Dennis Ritchie	Structured, High level, Machine independent Programming Language.

WHAT ARE LANGUAGE TRANSLATORS?

As we know that computer understands only the instruction written in the Machine language (Binary).

Therefore, a program written in any other language should be translated to Machine language. For this purpose, special program is available they are called translators or language processors. This special program accepts the user program and checks each statement and produces a corresponding set of Machine language instructions.

Atmiya University Rajkot

There are two types of Translators.

(1) Compiler (2) Interpreters

(1) Compiler:

- A Compiler checks the entire program written by user and if it is free from error and mistakes then produces a complete program in Machine language known as object program.
- But if it founds some error in program then it does not execute the single statement of the program.
- So, compiler translate whole program in Machine language before it starts execution.

(2) Interpreters:

- Interpreters perform the similar job like compiler but in different way.
- It translates (Interprets) one statement at a time and if it is error – free then executes that statement. This continues till the last statement in the program has been translated and executed.
- Thus, Interpreter translates and executes the statement before it goes to next statement.
- When it founds some error in statement it will immediately stop the execution of the program.
- Since compiler of Interpreter can translate only a particular language for which it is designed one has to use different compiler for different languages.

Difference of Compiler – Interpreter:

- Error finding is much easier in Interpreter because it checks and executes each statement at a time. So, wherever it fines some error it will stop the execution.
- Where Compiler first checks all the statement for error and provide lists of all the errors in the program.
- Interpreter take more time for the execution of a program compared to Compilers because it translates and executes each statement one by one.

C Character Set:

A Character denotes any alphabet, digit or special symbol used to represent information.
The characters in C are grouped into the following categories:

- Letters
- Digits
- Special Symbols
- White Spaces

Letters:

- Upper Case A….Z Lower Case a….z

Digits:

- 0……9

Atmiya University Rajkot

➢ Special Characters:

, Comma	& Ampersand	[Left bracket
. Period	^ Carot	] Right bracket
; Semi colon	– Minus sign	{ Left brace
: Colon	* Asterisk	} Right brace # Number sign
? Question mark	+ Plus sign	(Left parenthesis
‘ Apostrophe	< Opening angle bracket (or less than sign)	) Right parenthesis
“ Quotation mark	> Closing angle bracket (or greater than sign)	/ Slash
! Exclamation mark	$ Dollar sign	\ Backslash
| Vertical bar		% Per cent sign
~ Tilde		
_ Underscore		

➢ White Space:

- Blank space
- Horizontal tab
- Carriage return
- New line
- Form feed

C-Tokens:

In a passage of text, individual words and punctuation marks are called tokens.
Similarly, “ The smallest Individual part of the program is known as Token.”

Given below are C Tokens:

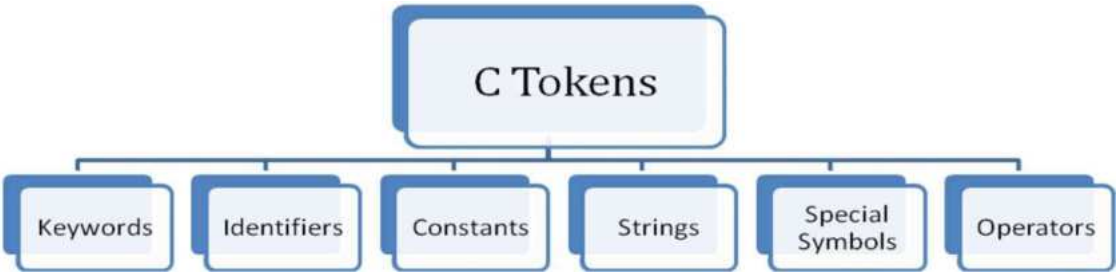

➢ Keywords:

- Keywords are the words whose meaning is already explained to the ‘C’ compiler.
- All keywords have fixed meaning, and these meanings cannot be changed.
- The keywords cannot be used as an Identifier.
- The keywords are also known as “Reserved Words”.
- Given below is the list of keywords supported by ANSI C. There are total 32 keywords available in ANSI C.

Atmiya University Rajkot

Key words in C			
Auto	Double	Int	Struct
Break	Else	Long	Switch
Case	Enum	Register	Typedef
Char	Extern	Return	Union
Const	Float	Short	Void
Continue	For	Signed	Unsigned
Default	Goto	Sizeof	Volatile
Do	If	static	While

- **Identifiers:**

The name given to the variables, functions and arrays is referred to as an Identifier.
These are user-defined names and consist of letters, digits & Special symbol (Only Underscore).
There are some rules to define an Identifier. They are as given below:

Rules:

First character must be an alphabet (or underscore).
Must consist of only letters, digits or underscore.
Only first 31 characters are significant.
Must not be a keyword.
Must not contain any white space.

- **Constants:**

Constants are the fixed values which are stored inside the variable.
During the execution of the program constants remains fixed.

C Supports several types of constants, they are as given below:

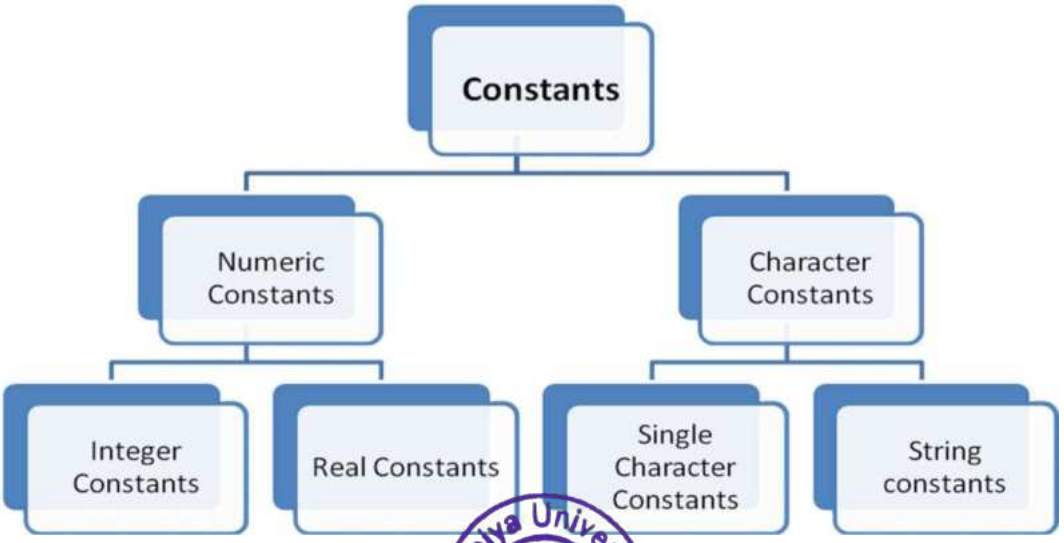

Atmiya University Rajkot

Numeric Constants:

As its name suggests the numeric constants are made up of digits. There are 2 types of numeric constants as given below.

(I) Integer constants:

There are some rules for defining integer constants.
An Integer constant must have at least one digit.
It must not have a decimal point. It could be either positive or negative.
If no sign proceeds, an integer constant assumed is positive.
No commas or blanks are allowed within an integer constant.
Example: - 436,45 10

(II) Real constants:

There are some rules for defining a real constant.
A Real constant must have at least on digit.
It must have a decimal point. It could be either positive or negative.
If no sign proceeds, an integer constant assumed is positive.
No commas or blanks are allowed within an integer constant.
A real number may also be expressed in exponential (or scientific) notation.
Example: - 134.98, 235.67

Character Constants:

As its name suggests the character constant always contains one character or no. of characters. There are 2 types of character constants.

(I) Single character Constants:

There are some rules for defining single character constants. They are as given below.

✓ **Rules:**

- A character constant is a single alphabet, a single digit or a single special symbol enclosed within a single inverted comma.
- Note that the character constant '5' is not the same as the number 5.
- Character constants have integer values known as ASCII values.
- For e.g. the statement printf("%d','a'); would print the number 97, the ASCII value of the letter a. Similarly, the statement printf("%c",97); would output the letter 'a'.
- Since each character constant represent an integer value it is also possible to perform arithmetic operations on character constants.
- **Example:** - 'A', '*', '1'

(II) String constants:

The rules of defining string constants are as given below.

✓ **Rules:**

- The string constants are always enclosed within double inverted commas. The string constants are just combination of characters, digits, and special symbols.
- **Example:** - "Welcome", "Hello"

Backslash character Constants:

C supports some special backslash character constants that are useful in output functions. Note that each one of them represents one character, although they consist of two characters.

Atmiya University Rajkot

These character combinations are known as escape sequences.
A list of such backslash character constants is given below:

Backslash character constants

Constant	Meaning
'\a'	audible alert(bell)
'\b'	back space
'\f'	form feed
'\n'	new line
'\r'	carriage return
'\v'	vertical tab
'\t'	horizontal tab
'\''	single quote
'\"'	double quote
'\?'	question mark
'\\'	backslash
'\0'	Null

SYMBOLIC CONSTANTS:

- We often use certain unique constants in a program.
- These constants may appear repeatedly in a number of places in the program. eg1. Constants 3.14 representing the value of the mathematical constant "pi". eg2. Total number of Students, TOTAL.
- We may use the name STRENGTH to define the number of students and PASS_MARKS to define the pass marks required in a subject.
- Constant values are assigned to these names at the beginning of the program.
- Subsequent use of the names STRENGTH and PASS_MARK in the program has the effect of causing their defined values to be automatically substituted at the appropriate points.

A constant is defined as follows:

Syntax:

#define symbolic-name value of constants

Example:

#define STRENGTH 100
#define PASS_MARK 50
#define PI 3.14159

o Symbolic names do not appear in declaration.

NOTE:

- A #define is a pre-processor compiler directive and not a statement. Therefore #define line should not end with a semicolon.
- Symbolic constants are generally written in uppercase so that they are easily distinguished from lowercase variable names.
- #define instructions are usually placed at the beginning before the main() function.
- Symbolic constants are not declared in declaration section.

Strings:

The combination of characters, digits & symbols is known as String.
The string is always enclosed within "& "(i.e., double inverted commas).

Atmiya University Rajkot

You can perform many operations on a string as per the requirement like.....

- Can compare two strings
- Can concate two strings
- Can calculate length of the string
- Can copy the string.

And all these operations can be possible by using the built-in functions available in <string.h> header file.

Special Symbols:

As the name suggest, each and every symbol is used for some special purpose.

We are already aware the available special symbols in C Character Set. (Read the Special Symbol list under the topic C Character Set).

Some are used as operators and may be some are used in some function, to complete the task.

Operators:

Operators are the symbols that can perform some operations on data or operands.

In short, it tells to computer to perform some mathematical or logical manipulation.

Before we learn the various operators, we have basic idea about the operator that is whether it is unary or binary?

What is Unary/Binary?

Generally, operators are classified into two main categories, namely Unary & Binary.

Unary: the operator that can operate only one operand at a time comes under this category.

For e.g.: -X, X++ etc.

Binary: the operator that can operate two operands at a time comes in this category.

For e.g.: a+b, a-b, a>b, a=10 etc.

C has rich set of operators; they are as given below:

(1) Arithmetic operators
(2) Relational operators
(3) Logical operators
(4) Assignment operators
(5) Increment and Decrement operators
(6) Conditional operators
(7) Bitwise operators
(8) Special operators

(1) Arithmetic Operators:

Arithmetic operators are used to perform arithmetic operations on data. The arithmetic operators are as given below.

Operator	Meaning
+	Addition or unary plus
-	Subtraction or unary minus
*	Multiplication
/	Division
%	Modulo division

Atmiya University Rajkot

- **Integer Arithmetic**

If a and b are integers, then for a = 14 and b = 4 we have the following results: a – b = 10
a + b = 18 a * b = 56
a / b = 3 (decimal part truncated) a % b = 2 (remainder of division)
If one of them is negative, the direction of truncation is implementation dependent. That is, 6/7 = 0 and –6/-7 = 0 but –6/7 may be zero or –1. (Machine dependent)

Similarly, during modulo division, the sign of the result is always the sign of the first operand (the dividend). That is,
-14 % 3 = -2
-14 % -3 = -2
14 % -3 = 2

- **Real Arithmetic**

An arithmetic operation involving only real operands is called real arithmetic. If x, y, and z are floats, then we will have:
x = 6.0/7.0 = 0.857143 y = 1.0/3.0 = 0.333333 z = -2.0/3.0 = -0.666667
The operator % cannot be used with real operands.

- **Mixed-mode Arithmetic**

When one of the operands is real and the other is integer, the expression is called a mixed-mode expression. Thus 15/10.0 = 1.5 whereas 15/10 = 1.

(2) Relational Operators:

The Relational operators are also known as "Comparison operators". Because comparisons can be done with the help of relational operators. Relational operators are used to show the relationship between 2 variables and variables and constants. They evaluate to either true or false.

Given below are the relational operators.

Operator	Meaning
<	is less than
<=	is less than or equal to
>	is greater than
>=	is greater than or equal to
==	is equal to
!=	is not equal to

(3) Logical Operators:

Logical operators are used to combine two or more expressions. In order to combine two or more, the one relational operator, the logical operators are used.

There are 3 logical operators as given below:
AND (&&)
OR (||)
NOT (!)
The logical operators && and || are used when we want to test more than one condition and make decisions.
For example: - if (age>18 && nationality=='I')
The expression which combines two or more relational expression is known as "Logical Expression" or "Compound Expression".

Atmiya University Rajkot

(4) Assignment Operator:

Assignment operators are used to assign a value to the variables.
"=" Sign is used to perform an assignment operation.
For e.g.: x=10;
Arithmetic assignment operators are also used in combination to simplify the use of both operators.
The combinations of both (arithmetic & assignment) operators are known as "Arithmetic Assignment Operators" or "Short Hand Operators" . Given below are the arithmetic assignment operators, which are most commonly used.
Short Hand Operators OR Arithmetic Assignment Operators:

Simple Assignment Operator	Short hand Operator	Description
x=x+10	x+=10	Add the value 10 to the variable X and store the answer in variable x.
x=x-10	x-=10	Subtract the value 10 from the variable X and store the answer in variable x.
x=x*10	x*=10	Multiply the value 10 with variable x and store the answer into variable x.
x=x/10	x/=10	Divide the value 10 by variable x and store the answer into variable x.
x=x%10	x%=10	Divide the value 10 by variable x and store the reminder into variable x.

(5) Increment / Decrement Operators:

The increment or decrement operators are used to increase or decrease the value of the operand.
They come under the category of Unary operators, because they can handle only one operand at a time.
Increment Operator -> ++
Decrement Operator -> --
They simply increment or decrement the value of the variable by 1, which is by default.
They are always used with only an integer value can't be used with the floating-point value.

(6) Conditional Operators:

Refer Unit No. – 2

(7) Bitwise Operators:

C has a distinction of supporting special operators known as bitwise operators for manipulation of data at bit level.
Bitwise operators are used to perform operations at binary digit level.
These operators are used for testing the bits or shifting them right or left.
Bitwise operators may not be applied to float or double.
These operators are not commonly used and are used only in special applications where optimized used of storage is required.
Following are the bitwise operators used in C language.

Atmiya University Rajkot

Operator	Meaning
<<	Shifts the bits to left
>>	Shifts the bits to right
~	Bitwise inversion(one's complement)
&	Bitwise logical AND
|	Bitwise OR
^	Bitwise exclusive OR

(8) Special Operators

C supports some special operators of interest such as comma operator, sizeof operator, pointer operators (& and *) and member selection operators (. and ->). The comma and sizeof operators are discussed in this section.

The Comma Operator

The comma operator can be used to link the related expressions together. A comma-linked list of expressions is evaluated left to right and the value of right – most expression is the value of the combined expression. For example, the statement value = (x = 10, y = 5, x + y);
First assigns the value 10 to x, then assign 5 to y, and finally assigns 15(i.e. 10+5) to value. Since comma operator has the lowest precedence of all operators, the parentheses are necessary. Some applications of comma operator are:

In for loops:
for (n = 1, m = 10; n <= m; n++, m++)

In while loops:
while (c = getchar(), c != '10')

Exchanging values:
t = x, x = y, y = t;

The sizeof Operator

The sizeof is a compile time operator and, when used with an operand, it returns the number of bytes the operand occupies. The operand may be a variable, a constant or a data type qualifier.

Examples:
m=sizeof(sum); n=sizeof(long int); k=sizeof(235L);
The sizeof operator is normally used to determine the lengths of arrays and structures when their sizes are not known to the programmer. It is also used to allocate memory space dynamically to variables during executions of a program.

Variable:

- A Variable is the name given to memory location.
- During the execution of the program the value of the variable may be changed / altered.
- The variable is also known as a container, because they contain values as a data.
- Generally, the variable name consist of letters, digits and special symbol, but there are some rules to define a variable name, they are as given below :

Atmiya University Rajkot

❖ **Rules:**

- The variable name must begin with alphabets.
- The variable name should be meaningful. That means the variable should clearly indicate the purpose.
- No special symbols rather than underscore (_) is allowed.
- The variable name must not be a keyword.
- No commas or blanks are allowed while defining a variable.
- The variable name may be combination of alphabets, digits and underscore.
- Uppercase and lowercase are significant. That is, the variable Total is not the same as total or TOTAL.
- Examples (Valid Variable names)
- Number, Total, Marks_C, R_no1
- Examples (Invalid Variable names)
- 1_marks, (Area), R.no

How to Declare a Variable?

Syntax:

Data type variable1, variable2, ... variable n;

Example:

```
int a,b,c;
float x, y;
```

How to assign values to the variable?

You can assign values to the variables by using the assignment operator.

Syntax:

Variable_name = value;

Example:

```
int A=0;    // assignment at declaration time also called Initialization.
int X;      // Declaration of a variable.
X=10;       // Assigning a value 10 to the variable X.
X=A;        // Assigning a value of one variable to another variable.
```

Note : the assignment notation always work from right to left, that means value at the right side is assigned to the variable at the left side.

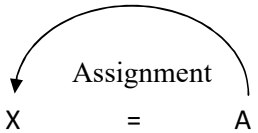

Atmiya University Rajkot

Data Types:

The predefined identification of any variable is known as "Data type".
The data type of any variable tells that what kind of values will be stored inside the variable.

ANSI c supports basically three classes of data types:

1. Primary (or Fundamental) data types
2. Derived data types
3. User-defined data types

Primary (or Fundamental) data types:

Basically, there are 5 primary data types in C, but all data types have some modifiers which helpful to extend the functionality of data types.
The primary data types with its respected bytes, range and keywords are as given below:

Data Types			
Data Type	**Keyword**	**Bytes**	**Range**
Integer	int	2	-32768 to 32767
Float	float	4	3.4e-38 to 3.4e+38
Character	char	1	-128 to 127
Double	double	8	1.7e-308 to 1.7e+308
Void	void	Empty date types	

- **Integer:**
  This data type is used to store the numeric value, without decimal point. (The whole number)
  If we use a 16-bit word length, the size of the integer value is limited to the range -32768 to +32767.
  For E.g.: 123, 456, 890

- **Float:**
  This data type is used to store the numeric value with a decimal point that is the floating-point number (Real number).
  It supports 6 digits after the decimal point.
  For Eg: 123.89, 78.09

- **Character:**
  This data type is used to store one or more character type data.
  For Eg: 'a', '@', "Atmiya" etc.

- **Double:**
  Used to handle double precision floating point number (i.e., More accurate Floating-point value).
  It provides accuracy up to 14 digits.
  All the data types have some modifiers which helpful to extend the meaning & facility of the data type. The modifiers, along with their memory space and range are as given in the table:

Atmiya University Rajkot

- **void data type:**
  "void" data type is known as "**Empty Data Type**". 'void' is a qualifier in C which can be used with function. When any function does not return anything or it does not have any arguments to declare, it can be declared using 'void'.

  Eg. :

  void change (int a)

  Return nothing

  void change(void)

  Return nothing No argument

  Though the 'void' is not compulsory, it is advisable to use with functions returning nothing otherwise computer shows a message in form of warning at the time of compilation i.e., 'function should return a value'. This thing is not going to output of the program. By providing the 'void' keyword along with function name, we are explicitly telling the computer that the functions do not return values.

Data types along with their modifiers		
Type	**Bytes**	**Range**
char or signed char	1	-128 to 127
unsigned char	1	0 to 255
int or signed int	2	-32768 to 32767
unsigned int	2	0 to 65535
short int or signed short int	1	-128 to 127
unsigned short int	1	0 to 255
long int or signed long int	4	-2147483648 to 2147483647
unsigned long int	4	0 to 4,294,483,647
float	4	3.4e-38 to 3.4e+38
double	8	1.7e-308 to 1.7e+308
long double	10	3.4e-4932 to 1.1e+4932

Atmiya University Rajkot

Basic Structure of C Program

Documentation Section
Link Section
Definition Section
Global Declaration Section

main() function Section
{
Declaration Part
Executable Part
}

Sub Program Section Function 1 Function 2 Function 3 (User Defined Function) …… Function n

The detailed content about all the section is as given below:
Documentation Section:
This section consists of a set of comment lines giving the name of the program, the author and other details, which the program would like to use later.

What is Comment?

The non-executable part of the program is known as comment.
There are two types of comment.

Single line comment:
Single l ine comment starts with //.
// this is single line comment

Multiline Comment:
Multiline comment encloses within /* and */
/* This is
Multi-line Comment */

Link Section:

This section provides instructions to the compiler to link functions from the system library. For example, if you want to use the function printf(), then you have to define link to the stdio.h (header file) and it is possible by using Pre-processor.

Atmiya University Rajkot

For Example:

```
#include<stdio.h>
#include<conio.h>
#include<math.h>
#include<stdlib.h>
```

- **Definition Section:**

This section defines all the symbolic constants.
o For e.g.: PI=3.1412
By defining symbolic constant one can use these symbolic constants instead of constant value.
The symbolic constants are defined with the help of pre-processor.
For e.g.:
#define PI 3.1412

- **Global Declaration Section:**

There are some variables that are used in more than one function. Such variables are called global variables. And they are declared in the global declaration section that is outside of all the functions. This section also declares all the user-defined function.

- **main() function Section:**

A main() function is a heart of any 'C' language program. Every C program must have one main() function section.

This section contains two parts:
(1) Declaration part and (2) Executable part.

(1) Declaration Part:
The declaration part declares all the variables used in the executable part.

(2) Executable Part:
This part contains all the executable statements.
Each & every statement in the executable part terminated by a semicolon.
These two parts must appear between the opening and closing braces. The program execution begins at the opening brace and ends at the closing brace.
The closing brace of the main function section is the logical end of the program.
Note: All sections, except the main function section may be absent when they are not required.

Example: 1 A program to print a simple message on the screen.

```
#include<stdio.h>
#include<conio.h>
main()
{
    printf("Atmiya University");
    return 0;
}
```

Output:
Atmiya University

Atmiya University Rajkot

Example: 2 A program to add two numbers.

```
#include<stdio.h>
#include<conio.h>
main()
{
        int a, b, c;
        clrscr();
        printf("Enter the value of a : ");
        scanf("%d",&a);
        printf("Enter the value of b : ");
        scanf("%d",&b);
        c=a+b;
        printf("\n Addition of a & b is %d",c);
        return 0;
}
```

Output:

Enter the value of a: 10
Enter the value of b: 20
Addition of a & b is 30

Example: 3 A program to calculate area of circle.

```
#include<stdio.h>
#include<conio.h>
#define PI 3.14
main()
{
        float r, a;
        clrscr();
        printf("\n Enter Radius : ");
        scanf("%f",&r);
        a = PI * r * r;
        printf("\n Area of Circle is : %f",a);
        return 0;
}
```

Output:

Enter Radius: 10
Area of Circle: 314

Sub-program Section:

- The subprogram section contains all the user-defined functions that are called in the main function. They are the code section which is defined outside the boundary of main function.
- This section defines all User Define Functions (UDF).

I/O functions of 'C' language.

- Reading, processing and writing of data are the three essential functions of a computer program. There are two methods of providing data to the program variables.
- One method is to assign values to variable through the assignment statements such as x=100;

Atmiya University Rajkot

- Another method is to use the input function scanf which can read data from keyboard, and the function printf which sends result out to a terminal.
- All input/output operations are carried out by two functions printf and scanf.
- Each program that uses a standard input/output function must contain the statement #include <stdio.h> at the beginning.
- The stdio.h is an abbreviation for standard input/output header file.
- The above #include <stdio.h> tells the compiler 'to search for a file stdio.h and place its contents at this point in the program.
- The contents of the header file become part of the source code when it is compiled.

➢ Reading data from keyboard:

- The general format of scanf is as follows:
- scanf ("control string", &variable1, &variable2,....);
- The control string contains the format of data being received.
- The ampersand symbol & before each variable name is an operator that specifies the variable name's address.
- We must always use this operator; otherwise, unexpected results may occur.
  Example: scanf("%d",&number);
- When this statement is encountered by the computer, the execution stops and waits for the value of the variable number to be typed in.
- Since the control string "%d" specifies that the integer value is to be read from the terminal, we have to type in the value in integer form.
- Once the number is typed in and the 'Return' key is pressed, the computer then proceeds to the next statement.
- Thus, the use of scanf provides an interactive feature and makes the program 'user friendly'.

➢ Printing data

- The general purpose of printf statement is to print the message.
  Example: printf ("Hello Everybody");
- The general format of printf is as follows:
  printf ("control string", variable1, variable2,....);
- The control string contains the format of data being received.
  Example: printf ("%d",number);
- When this statement is encountered by the computer, the computer prints the value of the variable that is read by the user.
- Since the control string "%d" specifies that the integer value is read from the terminal, we will get the value in integer form.
- Once the number is printed on the monitor, the computer then proceeds to the next statement. Thus, the use of printf provides an interactive feature and makes the program 'user friendly'.

➢ Type Casting

Converting one datatype into another is known as type casting or, type-conversion.
For example, if you want to store a 'float' value into a simple integer then you can type cast 'int' to 'float'. You can convert the values from one type to another data type using the cast operator as follows –

(type_name) expression

Atmiya University Rajkot

- Sometimes we are needed to force the compiler to explicitly convert the value of an expression to a particular data type.

This would be clear form the following example.

```
main()
{
    int x = 100;
    float div;

    div = x / 3;
    printf("Value of div : %f", div );
}
```

Output:

Value of div = 33.000000

The answer turns out to be 33.000000 and not 33.33. This is because of value 100 and 3 are both integer and hence 100/3 yields an integer. This 33 when stored in a is converted to 33.000000. At that time use type casting.

The following program illustrates this.

```
main()
{
    int x = 100;
    float div;

    div = (float) x / 3;
    printf("Value of div : %f",div);
}
```

Output:

Value of a = 33.333333

This program uses type casting. This consists of putting a pair of parentheses around the name of the data type in this program we said,

div = (float) x/3;

This expression (float) causes the variable x to be converted from type int to type float before used in the division operation which called Type Casting.

Atmiya University Rajkot

. . : : QUESTION BANK : : . .

One Mark Questions.

1. The graphical representation of any problem is known as_____. – **Flow Chart**
2. The step-by-step representation of any problem is known as _____. – **Algorithm**
3. The techniques which are used to solve any problem definition by analyzing any problem are known as _____. **Pre-Programming Techniques**
4. Which symbol is used to show the condition? – **Diamond**
5. Which symbol is used to show the variable declaration? – **Rectangle**
6. How many types of connectors in flowchart? – **2**
7. Which symbol is used to start every flow chart? – **Oval**
8. C is developed by _____ in the year_____. – **Dennis Ritchie, 1972**
9. BCPL stands for_____. – **Basic Combined Programming Language**
10. How many character set categories are available in C – Language? – **4**
11. Whose meaning of the words is already explained to the C Compiler? – **Keywords**
12. How many keywords are available in C-Language? – **32**
13. Keywords are known as _____. – **Reserve Words**
14. The name given to the variable, function or array is known as_____. – **Identifier**
15. _____ is the name given to memory location. – **Variable**
16. _____ are the values, stored inside the variable. – **Constants**
17. How many types of Constants are available in C-Language? – **2**
18. How many types of Numeric Constants are available in C-Language? – **2**
19. How many types of Character Constants are available in C-Language? – **2**
20. The Collection of Character is known as _____. – **Character Set**
21. _____ are the symbols that can perform some operations on operand. – **Operator**
22. How many types of Arithmetic operators are available in C-Language? – **5**
23. How many basic data types are available in C-Language? – **5**
24. ASCII stands for_____. – **American Standard Code for Information Interchange**
25. What is used to define a symbolic constant? – **#define**
26. Which symbol is used to termination of C programming statements? – **Semicolon**
27. Which language translator is used in Turbo-C? – **Compiler**
28. Which translator is interpreting the statements line by line? – **Interpreter**
29. Which type of operator is X+=10? – **Short hand operator**
30. Which operator is used to find the size of particular variable? – **sizeof Operator**
31. Which operator is used to store value into the variable? – **Assignment Operator (=)**
32. Which data type is known as empty data types? – **void**
33. What is the non-executable part of the program? – **Comments**
34. How many types of comments are available in C? – **2**
35. _____ Section is used to include the header files in C-Program. – **Link**
36. If X=9 and Z = X++ + X – – –X then value of Z is _____. – **8**

Atmiya University Rajkot

Descriptive Questions.

(1) What is program? Explain programming technique.
- What is program?
- Programming Techniques
- Programming Tools.

(2) Explain Flow chart in detail.
- Definition
- How flow chart is useful.
- Rules to draw a flow chart.
- Symbol for draw a flow chart.

(3) Explain Language Translator.
- About Translator.
- Two types of Translators
  - Compiler
  - Interpreter
- Difference of Compiler and Interpreter

(4) Explain C-Character Set.
- Letter
- Digit
- Special Character
- White Space

(5) Explain C-Tokens.
- Keywords
- Identifiers
- Constants
- Strings
- Special Symbols
- Operators

(6) Explain Constants in detail.

(1) Numeric Constants
  - Integer Constants
  - Real Constants

(2) Character Constants
  - Single Character Constants
  - String Constants

➢ Backslash character Constants

➢ Symbolic Constants

Atmiya University Rajkot

(7) Explain Different C-Operators.
- Arithmetic operators
- Relational operators
- Logical operators
- Assignment operators
- Increment and Decrement operators
- Conditional operators
- Bitwise operators
- Special operators

(8) Explain Logical operator with an example.
- (1) AND (&&) (2) OR (||) (3) NOT (!)
- Examples (1), (2) and (3)

(9) What is Variable? Explain in detail.
- What is Variable?
- Rules for define variable.
- How to declare variable?
- How to assign a value to the variable?

(10) What is Data Type? Explain Primary (Fundamental) Data Types.
- What is Data Type?
- Primary Data Types.
  - Integer, Float, Character, Double, Void

(11) Explain Basic Structure of C program.
- Documentation Section
- Link Section
- Definition Section
- Global Declaration Section
- Main function Section
  - Declaration Part
  - Executable Part
- Sub Program Section

(12) Explain reading & writing data from keyboard.
- Scanf function
- Printf function
- Example

(13) What is Type Conversion? Explain with an example.
- Definition of Type-Cast
- Description
- Example

Atmiya University Rajkot

Unit – 2

Control Structure

Introduction of Control Structure
(Decision Making Statements *or* Conditional statements)

- ✓ Until this point, we have seen that the C program executes from top to bottom sequentially, without skipping any single statement but this type of execution is not useful every time.
- ✓ Many times, it is necessary to change (alter) the flow of sequence of instruction. That means execute the program conditionally.
- ✓ C language supports statements that can be helpful to change the flow of program execution.
- ✓ These statements are called 'Control Statements' OR 'Decision Making Statements' OR 'Conditional Statements '.
- ✓ These statements help to execute the program conditionally, that means depending on the result of condition, some part (block) of the program will execute and some part (block) of the program will skip.
- ✓ The list of statements is as given below:
  - (A) if statement (Forms of if)
  - (B) switch statement
  - (C) Conditional operator statement
  - (D) goto statement
- ✓ These statements are purely known as "Decision Making". And they are also 'control' the flow of execution, they are also known as "Control Statement".
- ✓ Decision making with "if" statement
- ✓ If statement is the powerful decision making statement and is used to control the flow of execution of the statements.
- ✓ C uses the keyword if to implement the decision control instruction.
- ✓ Depending upon the no. of conditions and complexity of the program, one can use any form of if statement from the given list.

(A) Forms of if:

1. Simple if statement
2. if.....else statement
3. Nested if....else statement
4. else if ladder statement

(1) Simple if statement:

- ✓ It allows the computer to evaluate the expression first and then, depending on whether the value of the expression (relation or expression) is 'true' (non-zero) or 'false' (zero), it transfers the control to a particular statement.

➢ **Syntax:**

```
if(test -expression)
{
        statement-block
}
statement-x;
```


Atmiya University Rajkot

- **Flowchart:**

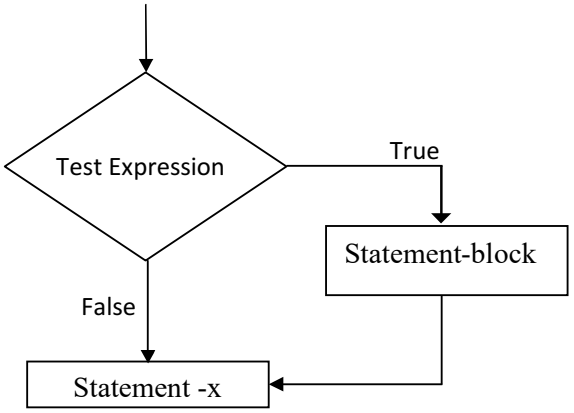

- **Description:**
  - ✓ If the test expression is evaluated to true, then the statement-block will be executed. And the statement-x will also be executed.
  - ✓ If the test expression is evaluated to false. Then the statement-block will be skipped and directly the control will jump to the statement-x.
  - ✓ Note that, in both the cases the statement-x will be executed.
  - ✓ The statement-block may be a single statement or the block of statements.

- **Example:** A program to check the entered age value.

```
// A program to show the use of simple if condition.
#include<stdio.h>
#include<conio.h>
main( )
{
        int age;
        clrscr( );
        printf(" \n Enter your age : ");
        scanf("%d",&age);
        if(age>=18)
        {
           printf(" \n You can get license");
        }
        printf(" \n Good Bye ');
        return 0;
}
```

- **Output:**

  Enter your age: 20
  You can get license
  Good Bye

Atmiya University Rajkot

(2) If … else statement:

If … else statement is the extension of the simple if statement. The general form (syntax) of if…else is as given below:

- **Syntax:**

```
if(test expression)
{
        True-block statement(s);
}
else
{
        False-block statement(s);
}
Statement-x;
```

- **Flowchart:**

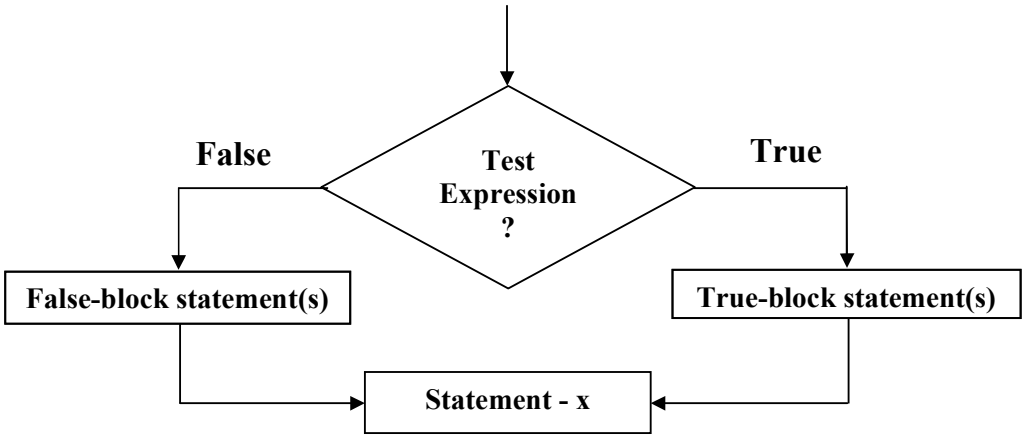

- **Description:**
  - ✓ First the expression is evaluated; if the expression is true then the control is transferred to the True-block of the program, and then the statement-x will be executed, which is out of the if else block.
  - ✓ If the expression is false, then the control is transferred to the False-block of the program. And then the statement-x, which is out of if … else block.
  - ✓ Note that, the statement-x will be executed in both the cases; they are not related with the result of the expression.
  - ✓ An Example of If…Else is as given below:

Atmiya University Rajkot

- **Example:** A Program to check whether the inputted no is positive or negative.

```
#include<stdio.h>
#include<conio.h>
main( )
{
        int no;
        clrscr( );
        printf(" \n Enter any number");
        scanf("%d",&no);
        if(no>0 )
        {
                printf(" \n The no. is Positive");
        }
        else
        {
                printf(" \n The no. is Negative");
        }
        return 0;
}
```

- **Output:**

```
Enter any number: 12
The no. is Positive
```

(3) Nested if … else Statement:

Some time it may happen that, the program require more than one condition, or we can say that series of conditions, at that time we have to use more than one ifelse statements in our program.

The one "if...else" statement within another "if....else" is known as "Nested if … else".

The general form of the "Nested if … else" is as given below:

- **Syntax:**

```
if(test expression -1 )
{
        if(test expression -2 )
        {
                Statement-1;
        }
        else
        {
                Statement-2;
        }
}
else
{
        Statement-3;
}
Statement –x;
```

Atmiya University Rajkot

- **Flowchart:**

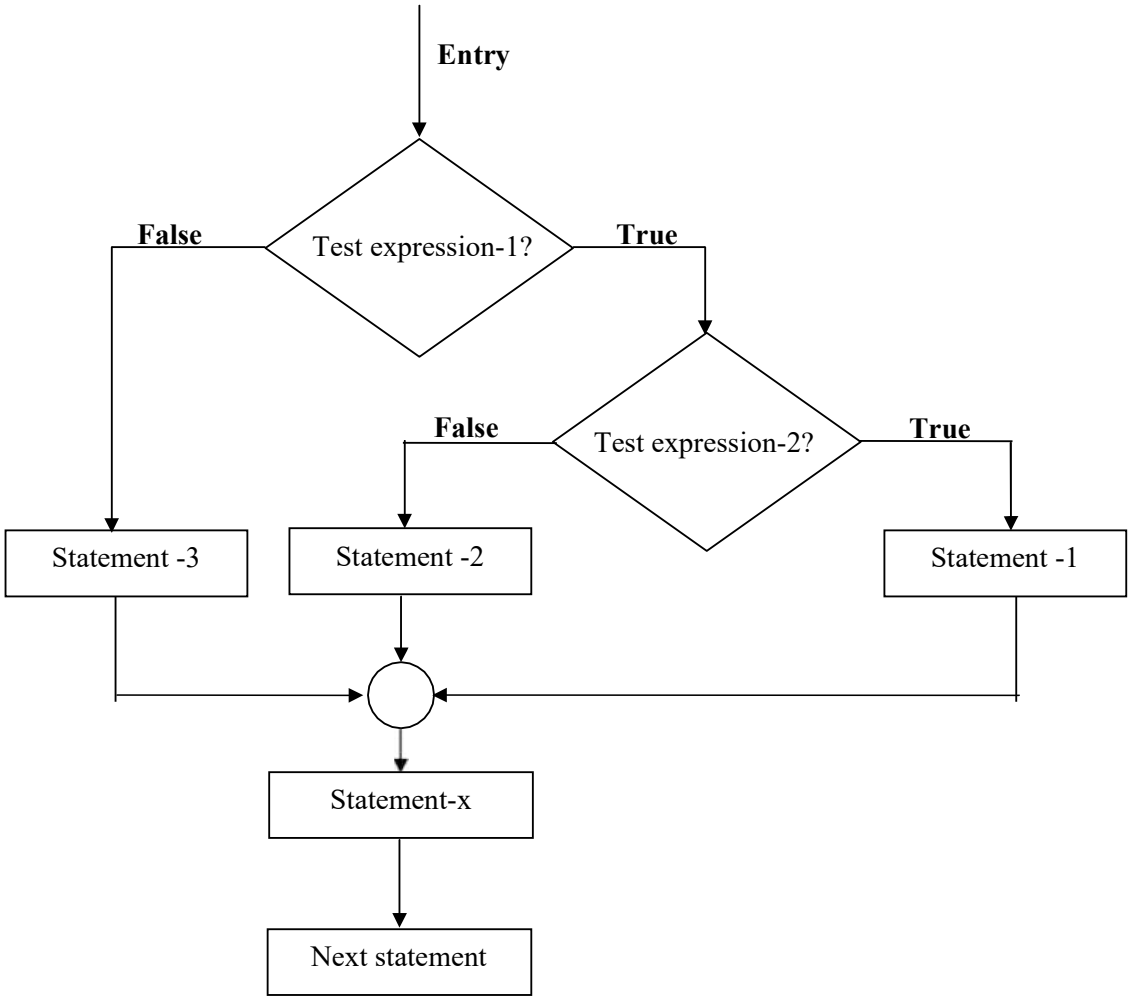

- **Description:**
  - ✓ If the Exp.1 evaluated to true, then the control will proceeds to the next expression (Exp.2). If both the Expressions are evaluated to true then the statement-1 will be executed.
  - ✓ If the Exp1 evaluated to true and Exp.2 evaluated to false then the control will transferred to the statemene-2.
  - ✓ And if the Exp.1 will evaluated to false, the control will transferred to the else portion of the main condition. That means the statement-3 will be evaluated.
  - ✓ And in any of the cases the control will proceeds always to the statement-x. Which is not depending on the result of the condition?

- **Example:** A Program to find out maximum value from given three values.

```
#include<stdio.h>
#include<conio.h>
main( )
{
        int a,b,c;
        printf(" \n Enter a: ");
        scanf("%d",&a);
        printf(" \n Enter b: ");
        scanf("%d",&b);
        printf(" \n Enter c: ");
        scanf("%d",&c);
        if(a>b)
        {
                if(a>c)
                {
                        printf(" \n A is Big");
                }
                else
                {
                        printf(" \n C is Big");
                }
        }
        else
        {
                if(c>b)
                {
                        printf(" \n C is Big");
                }
                else
                {
                        printf(" \n B is Big");
                }
        }
        return 0;
}
```

- **Output:**

```
Enter a: 20
Enter b: 30
Enter c: 40
C is Big.
```

Atmiya University Rajkot

(4) else...if ladder:

- ✓ Just observe that the program uses the nested if-else. This leads to three disadvantages:
- ✓ As the No. of conditions is going increased the level of indentation is also increased. An as a result the program is shifted to the right hand side, and readability of your program will be decreased.
- ✓ In case of nested if-else you must take care about the pair of the ifs and elses.
- ✓ You must take care of the opening braces and closing braces of each & every ifs and elses.

➢ **The general form of else...if ladder is as given below:**

Syntax:

```
if(condition-1)
        statement-1;

else if (condition-2)
        statement-2;

else if (condition-3)
        statement-3;

else if (condition-n)
        statement-n;
else
        default-statement;

statement-x;
```

➢ **Description:**

- ✓ This construct is known as the "ELSE…IF LADDER".
- ✓ The conditions are evaluated from top to bottom, downwards.
- ✓ As soon as a true condition is found, the statement associated with that condition will be executed, and then the control will transferred to the statement-x.(by skipping the rest of ladders).
- ✓ When all the condition become false, then the else portion that is the final else that contains the default- statement will be executed, and the control will transferred at the statement-x.
- ✓ That means the program execution will become faster, when you are using the else…if ladder instead of more than one ifs. Because after execution of a particular statement, there is not more conditions are checking, that means skipping the rest of ladder.

Atmiya University Rajkot

- **Flowchart:**

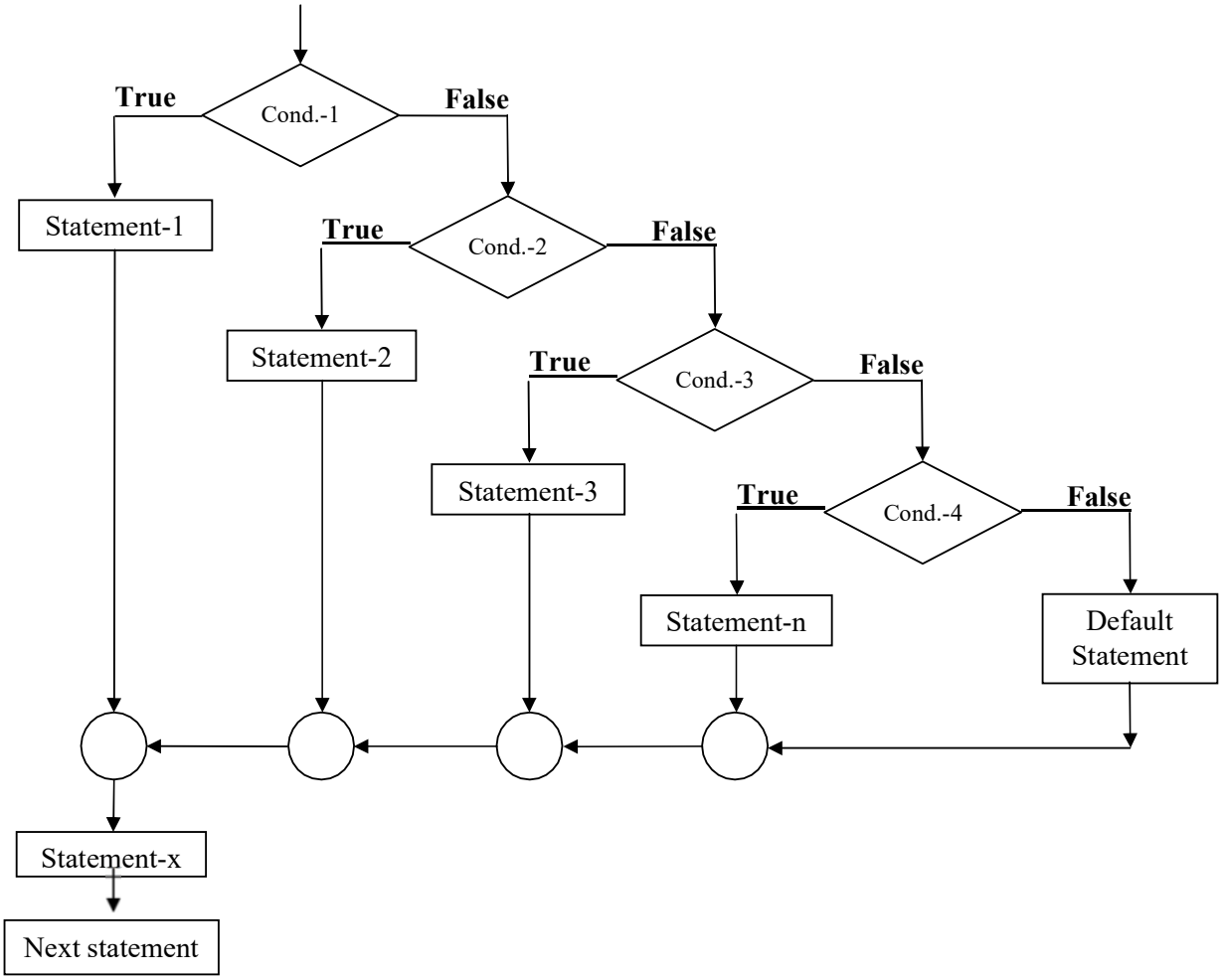

Atmiya University Rajkot

- **Example:** A Program to generate Mark sheet.

```
main( )
{
        int m1,m2,m3 ,tot;
        float per;
        printf(" \n Enter Mark1: ");
        scanf("%d",&m1 );
        printf(" \n Enter Mark2: ");
        scanf("%d",&m2 );
        printf(" \n Enter Mark3: ");
        scanf("%d",&m3 );
        tot=m1+m2+m3;
        per=(tot*100)/300;
        if(per>=80)
        {
                printf(" \n You get Distinction");
                printf(" \n Percentage : %f",per);
        }
        else if (per>=60)
        {
                printf(" \n You get First Class");
                printf(" \n Percentage : %f",per);
        }
        else if(per>=45)
        {
                printf(" \n You get Second Class");
                printf(" \n Percentage : %f",per);
        }
        else
        {
                printf(" \n You get Pass Class");
                printf(" \n Percentage : %f",per);
        }
       return 0;
}
```

- **Output:**

```
Enter Mark1: 80
Enter Mark2: 75
Enter Mark3: 85

You get Distinction
Percentage: 80.00
```


Atmiya University Rajkot

(B) "Switch…Case" statement (Multi way decision making statement):

- ✓ We have already done the decision making using simple ifs and multiple ifs and elses.
- ✓ And as we know that each new form of if was reduced the limitations of previous one.
- ✓ Actually there is no limitation of else if ladder. But when the no. of conditions are going to increasing the level of indentation will also going to increasing, at that time even a designer of a program will confuse about the program.
- ✓ So remove this limitation of the else…if ladder, C provides a facility called the Switch-Case statement, also known as "Branching Statement".

- ✓ The syntax of the Switch is as given below:

➢ **Syntax:**

```
switch(expression)
{
        case value-1:
                block-1;
                break;
        case value-2:
                block-2;
                break;

        ……................
        ……................

        default:
                Default-block;
}
```

➢ **Description:**

- ✓ The switch statement is particularly used for menu driven programming.
- ✓ The switch statement checks value of the expression against a list of case value, and when a match is found, a block of statements associated with that case is executed.
- ✓ The expression is an integer or character expressions.
- ✓ Value-1, value-2…. are the integer constants or the character constants.
- ✓ Each value in the list of case must be unique, that means no 2 case have similar values.
- ✓ Not that, each case keyword with expression is followed by a colon.
- ✓ The block-1, block-2…. Are the statement blocks and may contain 1 or more statement that will be executed.
- ✓ The value of switch (expression) will compared with a list of case values, and when a match is found the statement of that case will be executed.
- ✓ Note that, each block contain the "break" statement at the end of each statement block will signals the control at the statement-x which is out of the switch statement.
- ✓ When there is no match found between switch and case value the default case which is optional, and known as else case will be executed.
- ✓ ANSI C permits the use of as many as 257 case labels.

Atmiya University Rajkot

- **Advantage:**
  - ✓ The main advantage of switch statement over if is that it leads to more structured program & the level of indentation is manageable, more so if there are multiple statements within each case of switch.
  - ✓ Drawback is the use of logical operators. That means the logical operators cannot be used in switch…case.

- **Flowchart:**

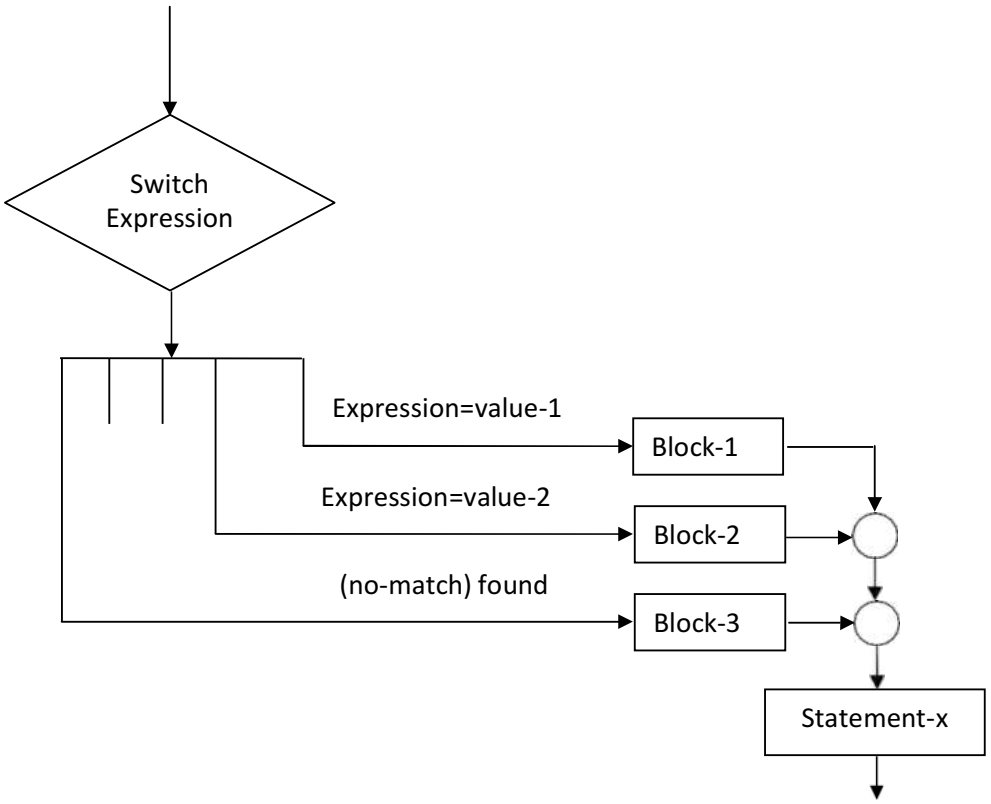

Atmiya University Rajkot

- **Example:** A menu driven program using switch…case:

```
main( )
{
        int ch,a,b,c;
        printf("\n 1.Addition");
        printf("\n 2.Subtraction");
        printf("\n 3. Multiplicatioin");
        printf("\n 4. Division");
        printf("\n Enter your choice : ");
        scanf("%d",&ch);
        printf("\n Enter A : ");
        scanf("%d",&a);
        printf("\n Enter B : ");
        scanf("%d",&b);
        switch(ch)
        {
                case 1:
                        c=a+b;
                        printf("%d",c);
                        break;
                case 2:
                        c=a-b;
                        printf("%d",c);
                        break;
                case 3:
                        c=a*b;
                        printf("%d",c);
                        break;
                case 4:
                        c=a/b;
                        printf("%d",c);
                        break;
                default:
                        printf("\n Invalid choice");
        }
        return 0;
}
```

- **Output:**

1. Addition
2. Subtraction
3. Multiplication
4. Division
5. Exit

Enter your choice: 1

Enter A: 10
Enter B: 20

30

Atmiya University Rajkot

(C) Conditional Operator:

- ✓ The conditional operator is also known as a "Ternary operator".
- ✓ It used as an alternative of simple if…else statement.
- ✓ The combination of ? and : is known as a conditional operator.
- ✓ The general form of conditional operator is as given below:

➢ **Syntax:**

Conditional expression ? expression 1 : expression 2;

➢ **Description:**

- ✓ In which the conditional expression is evaluated first, if the conditional expression is evaluated to true, then the expression 1 which is immediately followed by conditional expression will be executed.
- ✓ If the conditional expression is evaluated to false then the expression2 will be executed.
- ✓ The conditional operators can be used as an alternate of the simple if……else block. Since it can take 3 operands.
- ✓ The example of the conditional operator and it's comparison with simple if…else block is as given below:

➢ **Example:** Using conditional Operator

```
#include<stdio.h>
#include<conio.h>
main( )
{
        int x,y;
        printf("\n Enter the value of X :");
        scanf("%d",&x);
        printf("\n Enter the value of Y :");
        scanf("%d",&y);
        (x>y)?printf("X"): printf("Y");
        return 0;
}
```

The same thing can be done using if..else is as given below:

```
if(x>y)
        printf("X");
else
        printf("Y");
```

The following points can be noted out:

It's not necessary that the conditional operators should be used only in arithmetic statements.

➢ **Example:**

```
int i ;
scanf("%d",&i);
(i==1)? printf( "Hi") : printf( " Hello");
```

The conditional operator can be nested as shown below:

➢ **Example:**

```
char a='z';
printf("%c",(a>=' a ' ? a : ' ! '));
```

Atmiya University Rajkot

(D) "goto" statement:

- ✓ The goto statement is known as Jumping Statement.
- ✓ The goto statement is used to alter the normal sequence of program execution by transferring control to some other part of the program.
- ✓ That means if you want to control the flow of control according to a certain condition then you can do it with the help of "goto Statement ".
- ✓ Actually this statement is referred to as "goto label ".
- ✓ C supports the goto statements to branch unconditionally from one point to another in the program.
- ✓ The goto requires a label to identify the place where the branch is to be made.
- ✓ The label is any valid variable name, and must be followed by a colon.
- ✓ The label is placed immediately before the statement where the control is to be transferred.

➢ **Syntax:**

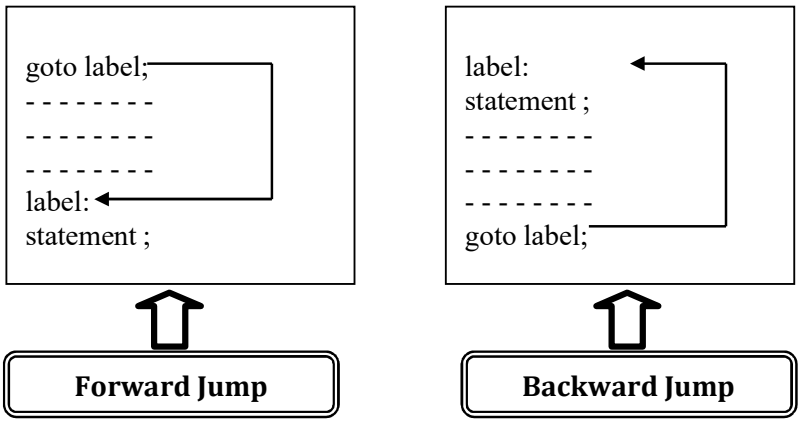

The label can be anywhere in the program either before or after the goto label; statement.

➢ **Description:**

- ✓ Note that a goto breaks the normal execution of the program.
- ✓ If the label: is placed before the statement goto label; a loop will be formed and some statements will be executed repeatedly. And such jump is known as "Backward Jump".
- ✓ If the label is placed after the goto label; some statements will be skipped & the jump is known as a "Forward Jump ".
- ✓ The most common applications of the goto is as given below:
- ✓ Branching around the statements and group of statements under certain conditions.
- ✓ Jumping it the end of a loop under the certain conditions, thus bypassing the reminder of the loop during the current pass.
- ✓ Jumping completely out of the loop under the certain conditions, thus terminating the execution of the loop.

Atmiya University Rajkot

- **Example:** A Program to print "ATMIYA" 3 times on screen.

```
#include<stdio.h>
#include<conio.h>

void main( )
{
        int cnt=1;
        XYZ:   // label
        printf("\n ATMIYA");
        cnt++;
        if(cnt<=3)
        goto XYZ;
        getch( );
}
```

- **Output:**

  ATMIYA
  ATMIYA
  ATMIYA

Various Looping Structures

- **What is Loop?**

  To perform a particular task no. of times the concept of loop is used.
  Or we can say that when we want to perform execute some program code repeatedly, at that time loop is used.

- **Types of Loop:**

  Basically there are two types of Loop:

  I. Finite Loop:
  II. Infinite Loop:

(I) Finite Loop:
When no. of iterations is fixed, that type of loop is known as Finite loop.

(II) Infinite Loop:
When no. of iterations is not fixed, that type of loop is known as Infinite loop.

Before learning about anything about loop, we first know following things:
Iteration: The meaning of the word "Iteration" is "Repetition".

- **Counter Variable:**
  - ✓ The variable which is used to count the no. of iterations is known as counter variable.
  - ✓ Types of Looping Structure/Statements:
  - ✓ There are three types of looping structure supported by C.
    - i. while statement
    - ii. do...while statement
    - iii. for statement

Atmiya University Rajkot

(i) While statement:

- ✓ The while statement is the simplest of all the loop structure in the C language.
- ✓ The syntax of the while statement is as given below:

➢ **Syntax:**

```
while (test expression)
{
        body of the loop
}
statement-x;
```

➢ **Description:**

- ✓ The while statement is known as entry-controlled loop. Because the condition is checked first and then the body of the loop will be executed if the condition is true.
- ✓ Here "while" is the keyword which denotes that the following block is the loop.
- ✓ If test expression is evaluated to true then and then the body of the loop will be executed, otherwise the control will transfer to the statement-x, which is immediately after the loop.
- ✓ If the condition is true and the loop will executed, then again the condition will be checked if the condition is true than the body of the loop will be executed. This process is continued while the test condition is not evaluated to false.

➢ **Flowchart:**

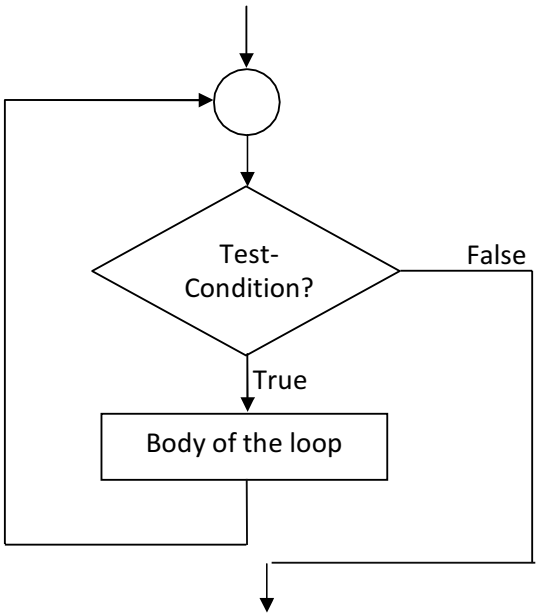

Atmiya University Rajkot

- **Example:** A Program to print 1 to 10 on screen.

```
#include<stdio.h>
#include<conio.h>

main( )
{
        int no=1;
        while(no<=10)
        {
                printf("\n %d",no);
                no++;
        }
        return 0;
}
```

- **Output:**

```
1
2
3
4
5
6
7
8
9
10
```

(ii) Do...while statement:

- ✓ The do…while statement is known as an "Exit-Controlled Loop".
- ✓ In case of while loop, the condition is checked first and then the body of the loop will be executed. That means if the condition is not satisfied at first attempt then the control will jump out of the loop.
- ✓ Where as in case of do…while statement the body of the loop is executed first and then the condition will checked, that means the body of the loop is executed if a condition is not satisfied at first attempt.

- **Syntax:**

```
do
{
        body of the loop
} while (condition);
```

- **Description:**
  - ✓ In above syntax the do & while are the keywords which defines the loop.
  - ✓ Consider the syntax the condition is not checked at the entry of the loop, but the condition is checked on exiting the loop.
  - ✓ According to the syntax, when the control will be reached at the do statement, then the control will proceeds to the body of the loop. And at last the condition will check.
  - ✓ Now if the condition is true then the control will go at the do statement again and the body of the loop is executed once again, this process continuous as long as the condition is true.

Atmiya University Rajkot

- **Example:** A Program to print 1 to 10 on screen.

```
#include<stdio.h>
#include<conio.h>
main( )
{
        int sum=0,count=1;
        do
        {
                sum=sum+count;
                count=count+1;
        }while(count<=10);
        printf("\n The Summation of 1 to 10 is : %d",sum);
        return 0;
}
```

- **Output:**
  The summation of 1 to 10 is 55

(iii) for statement:

- ✓ The for statement is the most widely used looping control statement among the all statements. This is again an entry controlled looping statement and provides a more concise loop control structure.
- ✓ The for loop is very simple and the syntax of the for loop is something different from the other 2 statements.

- **Syntax:**

```
for (initialization ; test condition ;increment)
{
        body of the loop;
}
```

- **Description:**
  - ✓ You can see the initialization of the counter variable is also the part of the loop.
  - ✓ Here the "for" statement is consisting of 3 parts:
    1. Initialization
    2. Testing
    3. Increment
  - ✓ The initialization of the counter variable is done only once, using an assignment statement.
  - ✓ The second part is consisting of the conditional statement that is the used to control the loop. If you want to know the maximum iterations of the loop, then you can identify it using the conditional expression.
  - ✓ The last part is consisting of the increment or decrement of the counter variable, through which the value of the counter variable is finally reach at the maximum iterations of the loop.
  - ✓ After executing this increment and decrement of the variable the value of the variable the new value of the variable is again tested, if the new value of the variable is satisfy the condition then the body of the loop is again executed. This process is continued till the value of the counter variable is reached at the maximum value of the variable.

Atmiya University Rajkot

- **Example:** A Program to print even numbers between 1 to 10 on screen.

```
#include<stdio.h>
#include<conio.h>
main()
{
        int i;
        clrscr();
        for(i=2; i<=10;i+=2)
        {
                printf(" \n %d",i);
        }
        return 0;
}
```

- **Output:**

```
2
4
6
8
10
```

- **Features of for loop:**
  - ✓ You can initialize more than one variable at a same time in the for statement.
  - ✓ You can give multiple arguments as an increment and decrement part of the for statement.
  - ✓ The test condition has any compound relation and the testing need not be limited only to the loop control variable.
  - ✓ It is also possible to use the expression to initialize the value of the counter variable.
  - ✓ It is also possible to omit one or more sections of the for statement.

Nesting of for loop:

- ✓ Like if statement, the for loop may be nested, that means one for loop within another for loop. This is as given below:
- **Example:**

```
for(i=1 ; i<=5 ; i++)
{
        ------
        ------
        for( j=1 ; j<=5 ; j++)
        {
                --------
                --------
        }
        -------
        -------
}
```

Inner Loop Part

Outer Loop Part

The nesting of the loop may continue up to any desired level, but our ANSI C Compiler allows up to 15 levels of the nesting.
The outer loop is for the rows and the inner loop is for the columns.

Atmiya University Rajkot

- **Example:** A Program using nested for loop

```
#include<stdio.h>
#include<conio.h>
main( )
{
        int I,j;
        clrscr ( );
        for( i=1 ; i <=5 ; i++)
        {
                for(j=1 ; j<=5 ; j++)
                {
                        printf("%d",i);
                }
                printf(" \n");
        }
        return 0;
}
```

- **Output:**

```
1 1 1 1 1
2 2 2 2 2
3 3 3 3 3
4 4 4 4 4
5 5 5 5 5
```

Break & Continue Statement:

1. break statement:

The break statement is used to terminate loops or to exit a switch.
The break statement will break or terminate the inner-most loop.
It can be used within a while, a do-while, a for or a switch statement. The break statement is written simply as break;
Without any embedded expressions or statement.

- **Example:**

```
for(i=1; i<=10; i++)
{
        if(i==5)
        break;
        printf("\n i=%d",i);
}
```

- **Output:**

```
1 2 3 4
```

Note: Here break will terminate the loop when the value of the variable I reach at the 5 & stops the execution.

Atmiya University Rajkot

2. Continue statement:

The continue statement is used to skip or to bypass some step or iteration of looping structure.

It does not terminate the loop but just skip or bypass the particular sequence of the loop structure. It is simply written as continue.

- **Example:**

```
for(i=1; i<=10; i++)
{
        if(i==5)
        continue;
        printf("\n i=%d",i);
}
```

- **Output:**

1 2 3 4 6 7 8 9 10

Note: The output of the above program will be 1,2,3,4,6,7,8,9,10. The 5th iteration of the loop will be skipped as we have defined the continue for that iteration. So, it will not print the value '5'.

Entry Controlled Loop v/s Exit Controlled Loop:

Entry Controlled Loop	Exit Controlled Loop
while statement is used an entry controlled loop.	do..while statement is used an an exit controlled loop.
Here the condition is checked first, and then body of the loop is executed.	Here the body of the loop appears first, prior to the condition.
If the condition is evaluated false at first attempt, the body of the loop will never execute.	Here the body of the loop executes at least once, if the condition is false.

Differences between while and do…while.

While	Do…while
The while loop is known as an "Entry Controlled Loop".	The do…while loop is known as "Exit-controlled Loop".
Here the condition is checked first, and then the body of the loop is executed.	Here the body of the loop is executed and then the condition is checked.
If the condition is evaluated false at the first attempt, the body of the loop will never execute.	If the condition is evaluated false at the first attempt, the body of the loop will execute at least once.

Syntax:
while(expression)
{
Body of loop.
}
	Syntax:
	do
	{
	Body of loop.
	} while(expression);

When we want to execute the body of the loop, when the expression evaluates true.	When we want to execute the body of the loop only once at that time this looping statement is used.

Atmiya University Rajkot

. . : : QUESTION BANK : : . .

One Mark Questions.

1. How many forms of if available in C? – **4**
2. What is another name of Switch Case? – **Branching Statement**
3. What is the multi way decision making statement? – **Switch Case**
4. When we put conditions with every else in program, that Notation is known as_____. – **else if ladder**
5. Which case is executed, while all the expression values are unmatched in switch statement? – **default**
6. When we put one if…else statement within another, is known as_____. – **Nested if else**
7. What is the alternate of the simple if……else block? – **Conditional Operator**
8. Which keyword is used for Jumping Statement? – **goto**
9. Which error will occur while we put semicolon (;) after the if()? – **Misplaced if**
10. Which keyword is used to transfer the control out of switch case block? – **break**
11. What concept is used to perform repetitive task no. of times? – **Loop**
12. Basically, there are _____ types of loops in C-Language. – **Two**
13. How many looping structures are available in C-Language? – **Three**
14. What is the Entry Control Loop in C? – **While**
15. What is the Exit Control Loop in C? – **Do…While**
16. How many parts (parameters) consisting in For Loop? - **Three**
17. What is the first part (parameter) of For Loop? – **Initialization**
18. The variable which is used to count the no. of iterations is known as _____. – **Counter Variable.**
19. Loop within another loop is known as _____. – **Nested Loop**
20. Which keyword is used to terminate the loop? – **break**
21. Which keyword is used to skip or bypass the iteration of loop? – **continue**

Descriptive Questions.

(1) Explain Decision making statements.
- if statement (Forms of if)
- switch statement
- Conditional operator statement
- goto statement

(2) Explain Form of if in C.
- Simple if statement
- if.....else statement
- Nested if....else statement
- else if ladder statement

Atmiya University Rajkot

(3) Explain Branching Statement.
- About Switch Case.
- Syntax
- Description
- Advantage

(4) What is Conditional Operator? Explain with an example.
- About Conditional Operator
- Syntax
- Description
- Example

(5) What is Loop? Explain various looping structure.
- What is loop?
- Type of loop.
- Three looping structure
  - For, While, Do…While

(6) Explain Exit Control Loop with an example.
- About Do…While loop
- Example.

(7) Explain For Loop with an example.
- About For loop
- Description with 3 parts
- Example.

(8) Explain break & continue statements with an example.
- break statement
- break example
- continue statement
- continue example

(9) Explain difference between Entry control loop and Exit control loop

(10) Explain difference between While and Do…While loop

(11) Any type of program of Control structure.

Atmiya University Rajkot

Unit – 3

Functions (UDF & In-built)

What is Function?

A function is self-contained block of statements that perform a particular task.

There are two types of functions:

(1) Built-in Function
(2) User Defined Function

Built-in Function: Built in functions are provided by the language itself, they are also known as "Library Functions".

User Defined Function (UDF): User Defined Functions are created by the user as per the requirements of the user.

(1) Built-in Functions:

Functions used with <stdio.h>:

❖ **printf( ):**

- ✓ printf( ) function is used to print or display values of variables using the standard output device (monitor). It has following form:
- ✓ printf("fromat string", v1, v2, …… vn);
- ✓ Where v1, v2, …. vn are variables whose values are to be displayed in the monitor. "Format string" is the control string which represents the format specification.
- ✓ There are several format specifiers - the one you use should depend on the type of the variable you wish to print out. Here are the common ones:

Format Specifier	Type
%d (or %i)	int
%h	short int
%u	unsigned int
%ld	long int
%c	char
%f	float
%lf	double
%L	Long double
%s	string
%x	Hexadecimal

- ✓ This function apply first format specifier to first argument, second format specifier to second argument, third to third .. etc.,a to end of the format.

Atmiya University Rajkot

- ✓ **Example:**

```
#include<stdio.h>
main()
{
        int a=10;
        printf("\n a equal to %d",a);
        return 0;
}
```

❖ **Scanf() :**

- ✓ scanf() function is used to read or input values of variables using the standard input device (keyboard). It has following form.
  - scanf("control string",&v1, &v2, ….. &vn);
- ✓ where v1, v2, …. vn are variables whose values are to be read from the keyboard. "Control string" represents the format specification.
- ✓ The symbol & (ampersand) represents the memory address where the variable value is to be stored.
- ✓ When this function is executed, the computer will wait for the values of the variable listed in scanf which are to be entered using the keyboard.
- ✓ **Example:**

```
main()
{
        int a;
        printf("\n enter any number:");
        scanf("%d",&a);
        return 0;
}
```

❖ **fflush():**

- ✓ **Syntax:**

  fflush (file *stream);

  If the given stream has buffered output, fflush writes the output for stream to associated file and if it is input stream then it will flush out the buffered memory.

  The stream remains open after fflush has executed.

  fflush has no effect on unbuffered stream.
- ✓ **Example:**

```
fflush(stdin);
fflush(stdout);
```

❖ **gets():**

- ✓ gets() function is used to read a string of characters including white spaces. Note that a string containing a white spaces canot read using scanf() with %s format specifier. It has the following form.
- ✓ **Example:**

```
void main()
{
        string s[80];
        gets(s);
        printf ("%s", s );
}
```

Atmiya University Rajkot

- **Puts():**
  - ✓ puts function is used to display a character string on the monitor screen. It works same as printf function but only for string value.
  - ✓ **Example:**

```
main()
{
    string s[80];
    gets(s);
    puts(s);
    return 0;
}
```

Functions used with <conio.h>:

- **getchar( ):**
  - ✓ getchar( ) function is used to read one character at a time form the standard input device (keyboard).
  - ✓ **Example:**

```
main()
{
        char ch;
        ch=getchar();
        return 0;
}
```

When this function is executed, the computer will wait for a key to be pressed and assigns the value to the variable when the enter key is pressed.

- **getche( ):**
  - ✓ getche( ) function is used to read a character form the keyboard without expecting the enter key press. However any key pressed by the user will be displayed on the monitor.
  - ✓ **Example:**

```
main()
{
        char ch;
        ch=getche();
        return 0;
}
```

- **getch( ):**
  - ✓ getch( ) function is used to read a character form the keyboard without expecting the enter key press.
  - ✓ **Example**:

```
main()
{
        char ch;
        ch=getch();
        return 0;
}
```

  - ✓ When this function is executed, the computer waits for a key to be pressed from the keyboard. As soon as a key is pressed, the control is transferred to the next line of the program and the value is assign to the char variable. It is noted that key (letter) pressed will not be displayed on the monitor screen.

Atmiya Institute Rajkot

- **clrscr( ):**
  - clrscr( ) function is used to clear the output screen. It places the cursor to the top left-hand corner.
  - **Example:**

```
#include<conio.h>
main()
{
        clrscr();
}
```

- **putchar( ):**
  - putchar( ) function is used to display one character at a time on the monitor screen.
  - **Example:**

```
char c = 'H';
putchar(c);
```

- **putch( ):**
  - putchar() function is used to display a character on the monitor screen. It has following form.
  - **Example:**

```
char c = 'H';
putch(c);
```

- **gotoxy( ):**
  - gotoxy( ) function is used to move the position of cursor at the specified row no. and column no. on the screen. It has no effect when specified row no. and column no. are out of rage.
  - **Syntax:**

    gotoxy(col no., row no.)

    where column number is in the range from 1 to 80 and row number is in the range from 1 to 25
  - **Example**:

```
main()
{
        gotoxy(20,15);
        printf("\n hello world");
        return 0;
}
```

- **textcolor( ):**
  - textcolor() function is used to selects new color for the characters.
  - It selects only foreground color in text mode.
  - It will not affect any characters that are already printed on the screen.
  - It affects only the characters that printed after this function is called.
  - **Syntax:**

    textcolor(Var_Name or Number);

    where no is a int variable or constant which range is 0 to 15.

Atmiya University Rajkot

- **textbackground():**
  - ✓ This function selects new background color for character. Only 0 to 7 colors are supported in background color. It will not affect any character already exist on the screen.
  - ✓ **syntax:**
    textbackground (Var_Name or Number);
    where no is a int variable or constant which range is 0 to 7.

- **cprintf():**
  - ✓ cprintf() sends formatted output to the screen. It works similarly as printf(). When we wants to use taxtcolor() or textbackground () like formatting functions, we must use cprintf() to see the affect of that function.
  - ✓ **Syntax:**
    cprintf("fromat string", v1, v2, …… vn);
  - ✓ **Example:**

```
main()
{
        int i ;
        for(i=1;i<10;i++)
        {
                textcolor(i);
                textbackground(i+1);
                cprintf("\n hello world");
        }
        return 0;
}
```

Differences between getch , getche and getchar.

getch()	getche()	getchar()
This function gets one character from the keyboard without display on the screen.	This function gets one character from the keyboard by echoing (displaying) it on screen.	This function accepts one character from the keyboard. (but you can feel that u are entering no. of characters).

Ex:
char ch;
printf("\n Enter any character:");
ch=getch();
printf("You entered %c",ch);
	Ex:
	char ch;
	printf("\n Enter any character:");
	ch=getch();
	printf("You entered %c",ch);
		Ex:
		char ch;
		printf("\n Enter any character:");
		ch=getchar();
		printf("You entered %c",ch);

Output: Enter any character : a You entered a	Output: Enter any character : a You entered a	Output: Enter any character : atmiya You entered a

Atmiya University Rajkot

Functions used with <math.h>:

- **abs( ):**
  - ✓ abs() gets the absolute value of an integer. This function will return the integer value. All the absolute value will be positive. It takes argument of -32768 to +32767 and returns the value from 0 to +32767.
  - ✓ **Syntax :**

    abs(Var_Name);

    where x is a int variable.
  - ✓ **Example**:

```
#include<math.h>
main()
{
        int a,b;
        a = -1234;
        b=abs(a);
        printf("A=%d, B=%d", a,b);
        return 0;
}
```

- **pow ( ):**
  - ✓ This function will return the value of x^y. If x, y both are 0 then it will return 1. Here x acts as base and y acts as exponent.
  - ✓ **Syntax:**

    pow (Var_Name1, Var_Name2);
  - ✓ **Example:**

```
#include<math.h>
main()
{
    float x = 5.5, y = 4.0, p;
    p = pow(x, y);
    printf("The value : %f", p);
    return 0;
}
```

- **ceil( ):**
  - ✓ This function returns smallest possible integer which is greater than or equal to x. It means it returns the nearest integer larger then x.
  - ✓ **Syntax:**

    ceil(Var_Name);
  - ✓ **Example :**

```
#include<math.h>
main()
{
        double x=123.54,result;
        result=ceil(x);
        printf("original number is %lf and rounded number is %lf",x,result);
        return 0;
}
```

Atmiya University Rajkot

- **floor( ):**
  - ✓ This function returns largest possible integer which is less than or equal to x. It means it returns the nearest integer smaller then x.
  - ✓ **Syntax:**

    floor(Var_Name);
  - ✓ **Example :**

```
#include<math.h>
main ()
{
    float X;
    X=2.7;
    printf("Value = %f", floor(X));
    return 0;
}
```

- **fmod():**
  - ✓ Function fmod() returns the reminder of real value.
  - ✓ **Syntax:**

    fmod(Var_Name1, Var_Name2);
    fmod() calculates x modulo y (x%y).
    It returns the reminder of x/y.
  - ✓ **Example :**

```
#include<stdio.h>
#include<conio.h>
#include<math.h>
main()
{
        double x=5.5,y=2.5, result;
        result=fmod(x,y);
        printf(" the reminder of %lf / %lf is %lf", x, y, result);
        return 0;
}
```

- **fabs( ):**
  - ✓ fabs () returns absolute value for real numbers. It returns positive real number and get real number as an argument.
  - ✓ It works same as abs (). But abs () gets integer and returns integers only, where fabs () can get real number and return real numbers.
  - ✓ **Syntax:**

    fabs (Var_Name);
  - ✓ **Example :**

```
#include<math.h>
main()
{
    double x=123.54, result;
    result=fabs(x);
    printf("absolute value of %lf is %lf", x, result);
    return 0;
}
```

Atmiya University Rajkot

Functions used with <ctype.h>:

isdigit():

- ✓ Isdigit() function is used to check whether the given character is digit or not.(0 to 9)
- ✓ This function returns TRUE value if value of x is a digit (0 to 9) otherwise it returns FALSE value.
- ✓ **Syntax:**

  isdigit (Var_Name);

  Where x is a character type argument
- ✓ **Example:**

```
#include<ctype.h>
main()
{
        char a;
        printf("\n enter any character:");
        scanf("%c",&a);
        if(isdigit(a))
        {
                printf("\n it is a digit.");
        }
        else
        {
                printf("\n it is not a digit.");
        }
        return 0;
}
```

isalpha():

- ✓ isalpha() function is used to check whether the given character is alphabet or not.
- ✓ This function returns TRUE value if value of x is an alphabet (A to Z, a to z) otherwise it returns FALSE value.
- ✓ **Syntax:**

  isalpha (Var_Name);

  Where x is a character type argument
- ✓ **Example:**

```
#include<ctype.h>
main()
{
        char a;
        printf("\n enter any character:");
        scanf("%c",&a);

        if(isalpha(a))
        {
                printf("\n it is a alphabet.");
        }
        else
        {
                printf("\n it is not a alphabet.");
        }
        return 0;
}
```


Atmiya University Rajkot

- **isalnum():**
  - ✓ isalnum() function is used to check whether the given character is digit/alphabet or not.
  - ✓ This function returns TRUE value if value of x is either alphabet or digit (A to Z, a to z, 0 to 9) otherwise it returns FALSE value.
  - ✓ **Syntax:**

    isalnum (Var_Name);

    Where x is a character type argument
  - ✓ **Example:**

```
#include<ctype.h>
main()
{
        char a;
        printf("\n enter any character:");
        scanf("%c",&a);
        if(isalnum(a))
        {
                printf("\n it is an alphanumeric value.");
        }
        else
        {
                printf("\n it is not an alphanumeric value.");
        }
        return 0;
}
```

- **isspace():**
  - ✓ Function isspace() is used to check whether the given character is space or not.
  - ✓ This function returns TRUE value if value of x is space character (space, tab, new line, carriage return, vertical tab) otherwise it returns FALSE value.
  - ✓ **Syntax:**

    isspace (Var_Name);

    Where x is a character type argument
  - ✓ **Example:**

```
#include<ctype.h>
main()
{
        char a;
        printf("\n enter any character:");
        scanf("%c",&a);
        if(isspace(a))
        {
                printf("It is a space")
        }
        else
        {
                printf("It is not a space.");
        }
        return 0;
}
```

Atmiya University Rajkot

- **isprint():**
  - isprint() is used to check whether the given character is printing character or not.
  - This function returns TRUE value if value stored in x is printable character otherwise it returns FALSE value.
  - **Syntax:**

    isprint (Var_Name);

    Where x is a character type argument

  - **Example:**

```
#include<ctype.h>
main()
{
        char a;
        printf("\n enter any character:");
        scanf("%c",&a);

        if(isprint(a))
        {
                printf("\n it is a printing character.");
        }
        else
        {
                printf("\n it is not a printing character.");
        }
        return 0;
}
```

- **islower():**
  - islower() is used to check whether the given character is in lower case or not.
  - This function returns TRUE value if value of x is lower alphabet (a to z) otherwise it returns FALSE value.
  - **Syntax**:

    islower(x);

    Where x is a character type argument

  - **Example:**

```
#include<ctype.h>
void main ()
{
        char a;
        printf ("\n enter any character :");
        scanf ("%c", &a);

        if (islower(a))
        {
                printf ("\n it is in lower case.");
        }
        else
        {
                printf ("\n it is not lower case.");
        }
}
```

Atmiya University Rajkot

- **isupper():**
  - ✓ isupper() is used to check whether the given character is in upper case or not.
  - ✓ This function returns TRUE value if value of x is upper alphabet (a to z) otherwise it returns FALSE value.
  - ✓ **Syntax:**
    isupper (x);
    Where x is a character type argument
  - ✓ **Example:**

```
#include<ctype.h>
main()
{
        char a;
        printf("\n enter any character:");
        scanf("%c", &a);
        if(isupper(a))
        {
                printf("\n it is in upper case.");
        }
        else
        {
                printf("\n it is not in upper case.");
        }
        return 0;
}
```

- **toupper():**
  - ✓ toupper() function is used to convert the character to upper case if it is in lower case else it will remain unchanged.
  - ✓ **Syntax**:
    toupper (Var_Name);
    Where x is a character type argument
  - ✓ **Example:**

```
#include<ctype.h>
main()
{
        char a;
        printf("\n enter any character:");
        scanf("%c", &a);
        printf("\n %c",toupper(a));
        return 0;
}
```

- **tolower():**
  - ✓ Function tolower() is used to convert the character to lower case if it is in upper case else it will remain unchanged.
  - ✓ **Syntax:**
    tolower (Var_Name);
    Where x is a character type argument

Atmiya University Rajkot

- ✓ **Example:**

```
#include<ctype.h>
main()
{
        char a;
        printf("\n enter any character:");
        scanf("%c", &a);
        printf("\n %c",tolower(a));
        return 0;
}
```

(2) User Defined Functions (UDF)

- ✓ **User Defined Function (UDF)**: User Defined Functions are created by the user as per the requirements of the user.
- ✓ How to create a user defined function? OR Elements of UDF.
  1) Function Declaration
  2) Function Definition
  3) Function Call

(1) Function Declaration:

Before creating any Function, one should declare the function. The function declaration is also known as "Function Prototype". The function prototype tells three things about the function…

1. **Name of the function:** Define the name of the function. The name of the function should be meaningful.
2. **No. & type of Arguments of the function:** The values which go inside the function are called arguments. In prototype you can define total no. of arguments and data type of the arguments.
3. **Return type of function:** The value comes out of the function are called return value.

Syntax of function declaration:

Return_data_type function_name (Parameter List)

Example:

int sum(int, int);

Terms of Function Declaration:

- ✓ The parameter list must be separated by commas.
- ✓ The types must match the types of parameters in the function definition, in number and order. Use of parameter names in the declaration is optional.
- ✓ If the function has no formal parameters, the list is written as (void).
- ✓ The return type is optional, when the function returns int type data.
- ✓ The return type is void if no value is returned.
- ✓ When the declared types do not match with the types in the function definition, compiler will produce an error.

Atmiya University Rajkot

(2) Function definition:

The part of the functions contains all the details of task, which is performed when the function is called.

In short, the function definition contains the coding, which is executed when the function is called.

Syntax:

```
ReturnDataType function_name (parameter_list)
{
        Local variable declarations;
        Executable statements;
        ……————————
        ……————————
        return (expression);
}
```

- ✓ All parts are not essential. Some may be absent. For example, the argument list and its associated argument declaration parts are optional.
- ✓ Similarly, the declaration of local variables is required only when any local variables are used in the function.
- ✓ A function can have any number of executable statements.

Function Header:

- ✓ The first line Return_Type Function_Name(parameter_list) is also known as function header and the statements within the opening and closing braces constitute the function body, which is a compound statement.
- ✓ The return statement is the mechanism for returning a value to the calling function.
- ✓ The function name should be appropriate to the task performed by the function.
- ✓ If the function is not returning anything then we need to specify the return type as void. Void is one of the fundamental data types in C.

Parameter list:

- ✓ The argument list contains valid variable names separated by commas.
- ✓ The list must be surrounded by parenthesis.
- ✓ The argument variables receive values from the calling function, thus providing a means for data communication from the calling function to the called function. They are often referred to as formal parameters.
- ✓ These values can also be used to send values to the calling program. Parameters are also known as arguments.
- ✓ Some examples of functions with arguments are:

```
int sum(int a, int b)
{
        ……————————.
}
```

Function Body:

- ✓ The Function Body contains the declarations and statements necessary for performing the required task.
- ✓ Local declarations that specify the variables needed by the function.
- ✓ Function statements that perform the task of the function.
- ✓ A return statement that returns the value evaluated by the function.
- ✓ If a function does not return any value we can omit the return statement. Its return type should be specified as void. Again it is nice to have a return statement even for void functions.

Atmiya University Rajkot

NOTE:

- ✓ When a function reaches its return statement, the control is transferred back to the calling program. In the absence of a return statement the closing brace acts as a void return.
- ✓ A local variable is a variable that is defined inside a function and used without having any role in the communication between functions.
- ✓ A function may or may not send back any value to the calling function. If it does, it is done through the return statement. While it is possible to pass to the called function any number of values, the called function can only return one value per call, at the most.

(3) Function Call (Calling a Function):

- ✓ A function can be called by simply using the function name in a statement.

e.g.

```
main()
{
        int ans;
        ans = mul(10, 5);
        printf("%d", ans);
        return 0;
}
```

- ✓ When the compiler encounters a function call, the control is transferred to the function mul (x, y).
- ✓ The function is then executed line by line as described and a value is returned when a return statement is encountered.
- ✓ This value is assigned to ans.
- ✓ A function cannot be used on the right side of an assignment statement.
- ✓ In a function call the function name is operand and the arguments specified in the parenthesis are called actual arguments. The actual arguments must match the function's formal arguments in type, order and number. Multiple actual parameters must be separated by commas.

NOTE:

- ✓ If the actual parameters are more than the formal parameters, the extra actual arguments will be discarded.
- ✓ On the other hand, if the actual are less than the formals, the unmatched formal arguments will be initialized to some garbage.
- ✓ Any mismatch in data types may also result in some garbage values.
- ✓ When you call the function, the function, the function which called, is known as "Called Function" & the other function from which the function is called is known as "Calling Function".

<u>The Function can be one of the following types</u>:

1. Function with argument and with return value.
2. Function with argument and no return value.
3. Function with no argument and with return value.
4. Function with no argument and no return value.

Atmiya University Rajkot

(1) Function with argument and with return value:

- ✓ This type of function can send arguments (data) from the calling function to the called function and wait for the result to be returned back from the called function back to the calling function.
- ✓ This type of function is mostly used in programming world because it can-do two-way communications.
- ✓ It can accept data as arguments as well as can send back data as return value.

✓ **Example:**

```
int sum(int , int);
void main( )
{
        int a, b, c;
        printf("\n Enter two values :");
        scanf("%d %d", &a, &b);
        c = sum(a, b);  // Function Call
        printf("\n Sum = %d", c);
        getch();
}
int sum(int x, int y)
{
        int z;
        z = x+y;
        return(z);      //Return Value
}
```

(2) Function with argument and no return value:

- ✓ This type of function can accept data from calling function. In other words, you send data to the called function from calling function but you cannot send result data back to the calling function.

✓ **Example:**

```
void sum(int , int);
void main( )
{
    int a, b;
    printf("\n Enter two values :");
    scanf("%d %d", &a, &b);
    sum(a, b);  // Function Call
    getch();
}
void sum(int x, int y)
{
    int z;
    z = x+y;
    printf("\n Sum = %d", z);
}
```

Atmiya University Rajkot

(3) Function no argument and with return value:

- ✓ We may need a function which does not take any argument but only returns values to the calling function then this type of function is useful.
- ✓ **Example:**

```
#include <stdio.h>
#include <conio.h>
int sum( );
void main( )
{
        int c;
        c = sum(a, b);  // Function Call
        printf("\n Sum = %d", c);
        getch();
}
int sum( )
{
        int x, y, z;
        printf("\n Enter two values :");
        scanf("%d %d", &x, &y);

        z = x+y;
        return z;        //Return value
}
```

(4) Function no argument and no return value:

- ✓ A C function without any arguments means you cannot pass data (values like int, char etc) to the called function. Similarly, function with no return type does not pass back data to the calling function.
- ✓ It is one of the simplest types of function in C.
- ✓ This type of function which does not return any value cannot be used in an expression it can be used only as independent statement.

- ✓ **Example:**

```
void sum( );
void main( )
{
        sum();  // Function Call
        getch();
}
void sum( )
{
        int x, y, z;
        printf("\n Enter two values :");
        scanf("%d %d", &x, &y);
        z = x+y;
        printf("\n Sum = %d",z);
}
```

Atmiya University Rajkot

Array as a function argument

- To pass an entire array to a function, only the name of the array is passed as an argument. To pass an array, there are [ ] is required in the function declaration to catch an arrays value. This informs the compiler that you are passing a one-dimensional array to the function. In C programming, you can pass arrays to function but you cannot return arrays from functions.
- **NOTE:** You can pass the entire array as a function argument and also can pass individual elements of an array to the function.

Ex.:

```
void xyz(int []);           // declaration
void main()
{
    int x[5],i;
    clrscr();
    for(i=0;i<5;i++)
    {
            printf("Enter Value : ");
            scanf("%d",&x[i]);
    }
    xyz(x);                 // function call
}
void xyz(int x[])           // definition
{
    int i,sum=0;
    for(i=0;i<5;i++)
    {
            sum=sum+x[i];
    }
    printf("Sum of 5 values : %d",sum);
}
```

Passing individual elements of an Array.

```
void ATMIYA (int)
void main()
{
    int i;
    int val[]={45, 65, 85};
    for(i=0;i<=2;i++)
    {
            ATMIYA(val[i]);         // Calling a function by passing one element each time.
    }
    getch();
}
void ATMIYA(int m)      // UDF
{
    printf("\n %d",m);
}
```

Output:

45
65
85

Atmiya University Rajkot

Recursion:

Recursive function is a function which contains a call to itself. Recursive function can be effectively used to solve problems where solution is expressed in terms of successively applying the same solution to subsets of the problem. When we write recursive function, we must have an "if statement" somewhere to force the function to return without the recursive call being executed. Otherwise, the function will never return.

Example of using recursive function:

Recursive function is closely related to definitions of functions in mathematics so we can solve factorial problems using recursive function

A function to evaluate factorial of n is as follows:

```
int fact(int);
void main()
{
        int n;
        printf("Enter number :");
        scanf("%d", &n);
        printf("Factorial value = %d", fact(n));
}


int fact(int n)
{
        If(n==0)
        {
            return 0;
        }
        else if(n==1)
        {
            return 1;
        }
        else
        {
            return n + ( fact(n-1) );
        }
}
```

Let us see how the recursion works. Assume that n=3, first time f=1, and f become 3, then n become 2, then the function will call again and f=3*2=6, n=1, then again fact will call and f=6*1=6, n=0. Now n=0 so, the condition if(n>0) become false then 6 will be return to the calling function.

Atmiya University Rajkot

. . : : QUESTION BANK : : . .

One Mark Questions.

1. Which header file should be included to use printf()? – **stdio.h**
2. Which header file should be included to use gets()? – **stdio.h**
3. Which header file should be included to use getchar()? – **conio.h**
4. Which header file should be included to use cprintf()? – **conio.h**
5. Which header file should be included to use ceil()? – **math.h**
6. Which header file should be included to use isdigit()? – **ctype.h**
7. Which header file should be included to use strcmp()? – **string.h**
8. How many types of UDF available in C? – **Four**
9. A function call itself is known as _____. – **Recursion**
10. A _____ is a self-contained block of statements that perform a particular task. – **Function**
11. How many types of function are available in C? – **Two**
12. Which function asks a character from user but not display its input on screen? – **getch()**
13. What is the output of → floor(-9.5)=? – **-10**
14. What is the output of → ceil(0.1)=? – **1**
15. What will be the output of → abs(-10)=? – **10**
16. What will be the output of → fabs(10.7)? – **10.7**
17. Which function is used to clear the previous input of user? – **fflush()**
18. The function name with the coding block is known as _____. – **Function definition**
19. What is the default return data type of UDF? – **int**
20. What is the range of argument of textcolor()? – **0 to 15**
21. What is the range of argument of textbackground()? – **0 to 7**
22. Which function is necessary to get effect while textcolor() is used? – **cprintf()**
23. How many argument(s) is/are required for gotoxy()? – **Two**

Descriptive Questions.

(1) What is Function? Explain the function used with stdio.h.
- What is Function?
- Types of Function
- Function list used with stdio.h.
- Example

(2) What is Function? Explain the function used with conio.h.
- What is Function?
- Types of Function
- Function list used with conio.h.
- Example

Atmiya University Rajkot

(3) What is Function? Explain the function used with math.h.
- What is Function?
- Types of Function
- Function list used with math.h.
- Example

(4) What is Function? Explain the function used with ctype.h.
- What is Function?
- Types of Function
- Function list used with ctype.h.
- Example

(5) What is Function? Differences between getch , getche and getchar
- What is Function?
- Difference with an example

(6) What is User Define Function? Explain Elements of UDF.
- What is UDF?
- Elements of UDF
  - Function Declaration
  - Function Call
  - Function Definition
- Example

(7) What is User Define Function? Explain types of UDF.
- What is UDF?
- Types of UDF
- Example

(8) What is Recursion? Explain with an example.
- What is Recursion?
- Descriptions with an example

(9) Explain formatting function.
- gotoxy(), textcolor(), textbackground(), cprintf()
- Descriptions with an example

(10) Explain single character function.
- getchar(), getche(), getch()
- putchar(), putch()
- Example

(11) Explain Array as a function argument with an example.
- Description
- Example

(12) Any type of program of Function.

Atmiya University Rajkot

Unit – 4

Array

Array

❖ **Introduction:**

- ✓ Up to this step, we have learned how to declare variable & how to store values in a variable?
- ✓ Some time it may happens that, in our program, we require more no. of values of same data type. For E.g. Storing of marks of 50 students.
- ✓ At that time it is not proper to take the 50 variables for storing marks and also it is really very difficult to manage no. of values.
- ✓ So, to solve the problem, we have one concept, known as an "Array".

❖ **What is an Array?**

- ✓ An array is a collection of elements having similar data type.
  Or
- ✓ An array is a group of related data items that share a common name or we can say that An Array is a fixed-size sequenced collection of elements of the same data type.
- ✓ An Array is also known as "Derived Data type ".
  Note:
- ✓ A Particular value in an array is indicated by a number called "index number" specified in a "subscript".
- ✓ Each value in an array is called "elements of an array".
- ✓ The "index number" is always starts from 0[zero] and the last index is always size-1.
- ✓ The name of the array can be any valid identifier, which represents a set of values of any valid data type available in C.

❖ **Types of an Array:**

(1) One Dimensional Array
(2) Multi Dimensional Array

(1) One Dimensional Array:

The array is said to be a one dimensional, if the array variable name has only one subscript. That means a list of items can be given one variable name using only one subscript and such variable is called a "Single scripted variable " or " One dimensional Array ".

Syntax:
Data-type Variable- name[size];
Where,
The data type is any valid c data type.
Variable is any valid c identifier.
And the size specifies the no. of values can be stored inside the array.

Example:
int a[5];

Here 5 is size of the array.
[5] Denotes one subscript.

Atmiya University Rajkot

The computer reserves the five locations as shown below:

a[0]
a[1]
a[2]
a[3]
a[4]

Description:

- ✓ Declares the variable named "a" and can hold 5 values at a same time.
- ✓ All the values may belong to only one data type that is integer.
- ✓ Consider the figure; the array variable name has one subscript that is called the index number.
- ✓ The array index begins with 0 and the last subscript is always size of array minus 1.
- ✓ If you want to access the elements of an array then you must access only by using its index values.

Note: Any references to the arrays outside the declared limits would not necessarily cause an error. Rather it might result in unpredictable results.

The size should be either a numeric constant or a symbolic constant.

Example: Program of using an Array:

```
#include<stdio.h>
#include<conio.h>

void main( )
{
        int a[5],i;

        for(i=0;i<5;i++)
        {
           printf("\n Enter Value:");
           scanf("%d",&a[i]);
        }

        for(i=0;i<5;i++)
        {
           printf("\n%d",a[i]);
        }
        getch( );
}
```


Atmiya University Rajkot

Output:

```
Enter Value: 10
Enter Value: 20
Enter Value: 30
Enter Value: 40
Enter Value: 50

10
20
30
40
50
```

✓ **Initialization of One-dimensional array:**

As an ordinary variable we can also initialize the array variable. The array can be initializing either "Compile time" or "Run time".

✓ **Compile Time Initialization:**

You can initialize an array at compile time by defining a set of values within {…….}.

Syntax:

data type variable name[size] = {list of values};

Example1:

```
int no[3]={1,2,3 };
where,
no[0]=1 no[1]=2 no[3]=2
```

Example2:

```
float a[4]={0 .08,0 .10 ,6.78,45 .5 };
where,
a[0]=0.08;
a[1]=0.10;
a[2]=6.78;
a[3]=45.5;
```

Example3:

```
char nm[5]={'A','T',' M','I','Y','A','\0'};
        or
char nm[5]= "ATMIYA";
where,
nm[0]='A';
nm[1]='T';
nm[2]='M';
nm[3]='I';
nm[4]='Y';
nm[5]='A';
nm[6]='\0';
```

Atmiya University Rajkot

(2) Multi Dimensional Array:

- ✓ We all know that an array variable can store a list of values. Now, if we want to store a list of value in form of table, at that time multi-dimensional array is used.
- ✓ The multi-dimensional array is just a variable name with 2 or more subscript.
- ✓ The same rule is applied over here. That is the subscript is start from 0 and the last subscript is size-1.
- ✓ Two-dimensional arrays are used to store two or more 1-D array.

Syntax:

Data-type variable-name [row size] [column size];

Example:

int no[3][4];

- ✓ The above variable no can hold total 12 values. The memory representation of the no variable is as given below:

no[0][0]	no[0][1]	no[0][2]	no[0][3]
no[1][0]	no[1][1]	no[1][2]	no[1][3]
no[2][0]	no[2][1]	no[2][2]	no[2][3]

Initialization of Two dimensional arrays:

Example:

int mat[2][2]={{1,2}{3,4}}

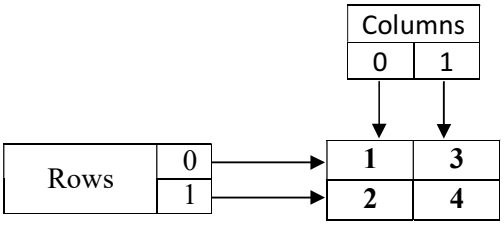

Atmiya University Rajkot

Example: A Program using 2 - D Array:

```
#include<stdio.h>
#includE<conio.h>

void main()
{
        int marks[3][3],i,j,total,avg; clrscr();
        /* Input marks of 3 subject of 3 student */
        for(i=0; i<3;i++)
        {
           for(j=0; j<3;j++)
           {
                    printf("Enter matks %d of student %d::", j+1,i+1 );
                    scanf("%d",&marks[i][j]);
           }
           printf(" \n");
        }
        for(i=0; i<3;i++)
        {
           printf(" \n Student %d::",i+1 );
           printf(" \n       \n");
           total=0;
           for (j=0; j<3;j++)
           {
                    printf("%5d",marks[i][j]);
                    total+=marks[ i][j];
           }
           avg=total/3;
           printf(" \n\ntotal of student %d is %d",i+1 ,total);
           printf(" \n Average of Student %d is %d \n ",i+1,avg);
        }
        getch();
}
```

Character Array

Character Array=String. We have discussed the string as a Token.
String: A String is a collection of characters. And we know collection means array and array of characters means string.

Any group of characters (except double quote sign) defined between double quotations marks is a constant string. Character strings are often used to build meaningful and readable programs.

Syntax (Declaration of String):
char string_nm[size];

Atmiya University Rajkot

Example:
char city[10];
char name[20];
Each character of the string is treated as an element of the array is stored in the memory as follows:
char nm[10];
Here the character variable nm can hold 10 characters that is string of maximum 10 characters.

Suppose we store the string value- "WEL COME".

'W'
'E'
'L'
' '
'C'
'O'
'M'
'E'
'\0'

Note: When the compiler sees a character string, it terminates with an additional character called null character ('\0') i.e slash zero.

Reading & Writing Strings:

1. Reading Strings:

We can read strings by using one of two functions:
scanf() & gets()

scanf(): We can read strings with the help of scanf() function by following the standard syntax of scanf() function.
That means we have to specify the format specifier as "%s" and the name of the string variable.

Example:

```
char clg_nm[10];
printf(" Enter Name of College : ");
scanf("%s" ,clg_nm);
printf(" \n You entered :   %s ",clg_nm);
```

Output:
Enter Name of College : Atmiya University
You entered : Atmiya

Atmiya University Rajkot

- ✓ The problem with the scanf function is that it terminates its input on the first white space it finds. (A white space includes blanks, tabs, carriage returns, form feeds, and new lines.) Therefore, if the following line of text is typed in at the terminal,
  - ➔ Virani Science
- ✓ Then only the string "Atmiya" will be read into the array address, since the blank space after the word "Atmiya" will terminate the string.
- ✓ In many text-processing applications, we need to read in an entire line of text from the terminal.
- ✓ It is not possible to use scanf function to read a line containing more than one word.
- ✓ This is because the scanf terminates reading as soon as a space is encountered in input.

- ✓ However, C supports a format specification known as the edit set conversion code %[..] that can be used to read a line containing a variety of characters, including whitespaces.

```
char Z[80];
scanf("%[^\n]",Z);
printf("%s",Z);
```

- ✓ This will read line of text from the keyboard and display the same on the screen.

gets(): This is a special function for getting a string from terminal.
This is a simple function with one string parameter and called as under:

Syntax:
gets(str);

Example:

```
char clg_nm[10];
printf(" Enter Name of College :");
gets(clg_nm);
printf(" \n You entered :   %s ",clg_nm);
```

Output:
Enter Name of College : Atmiya University
You entered : Atmiya University

Note: The scanf() function can't recognize the white space in a string where as the gets() function can recognize the string.
Like other variable name no need to specify & when you are getting string by using scanf().
When you want to store only one string, one dimensional character array is used, and when we want to store no. of string at that time two-dimensional character array is used.

2. Writing Strings to Screen

Using printf function:

- ✓ We have used extensively the printf function with %s format to print strings to the screen. The format %s can be used to display an array of characters that is terminated by the null character.
- ✓ For example, the statement -> printf("%s",name); can be used to display the entire contents of the array name.

Using putchar() and puts() Function:

- ➔ Please Refer Unit no. – 3

Atmiya University Rajkot

String – Handling Functions: <string.h>
Following are the most commonly used string-handling functions.

Sr. No.	Function	Action
1	strcat( )	Concatenates two strings.
2	strcmp( )	Compare two strings.
3	strcpy( )	Copies one string over another.
4	strlen( )	Finds the length of a string.
5	strrev( )	Reverse given string
6	strlwr( )	Converts given string into lower case letters
7	strupr( )	Converts given string into upper case letters

1) strcat( ) function :

The strcat function joins two strings together. It takes the following form:
Syntax: strcat (string1, string2);
string1 and string2 are character arrays. When the function strcat is executed, string2 is appended to string1. It does so by removing the null character at the end of string1 and placing string2 from there. The string at string2 remains unchanged. For example, consider the following three strings:

string1 =

0	1	2	3	4	5	6	7	8	9	10	11	12
V	E	R	Y		\0							

string2 =

0	1	2	3	4	5	6
G	O	O	D	\0		

Execution of the statement
strcat(part1,part2);
will result in:

string1 =

0	1	2	3	4	5	6	7	8	9	10	11	12
V	E	R	Y		G	O	O	D	\0			

string2 =

0	1	2	3	4	5	6
G	O	O	D	\0		

2) strcmp( ) Function :

- ✓ The strcmp function compares two strings identified by the arguments and has a value 0 if they are equal. If they are not, it has the numeric difference between the first nonmatching characters in the strings. It takes the form:
- ✓ **Syntax:**
  int strcmp (char string1, char string2);
  string1 and string2 may be string variables or string constants.

- ✓ **Examples are:**
  strcmp(name1,name2);
  strcmp(name1,"Xyz");
  strcmp("Xyz","Abc");
- ✓ if return value is < 0 then string1 is less than string2
- ✓ return value is == 0 then string1 is equal to string2
- ✓ return value is >0 then string1 is greater than string2.
- ✓ Our major concern is to determine whether the strings are equal; if not, which is alphabetically above. The value of the mismatch is rarely important. For example, the statement -> strcmp("their","there");
  will return a value of –9 which is the numeric difference between ASCII "i" and ASCII "r". That is, "i" minus "r" in ASCII code is –9. If the value is negative, string1 is alphabetically above string2.

3) strcpy( ) Function :

- ✓ The strcpy function works almost like a string-assignment operator. It takes the form
- ✓ Syntax: strcpy (string1, string2);
- ✓ and assigns the contents of string2 to string1. String1 may be a character array variable or a string constant.
- ✓ For example, the statement
  ➔ strcpy(city, "RAJKOT");
  will assign the string "RAJKOT" to the string variable city.
- ✓ Similarly, the statement
  strcpy(city1,city2);
  will assign the contents of the string variable city2 to the string variable city1. The size of the array city1 should be large enough to receive the contents of city2.

4) strlen( ) Function :

This function counts and returns the number of characters (length) in a string.

Syntax:

n = strlen(string);

Ex. n = strlen("Atmiya"); or n=strlen(str1);

Where n is an integer variable, which receives the value of the length of the string. The argument may be a string constant. The counting ends at the first null character.

5) strrev( ) Function :

This function changes all characters in a string to reverse order except the terminating null character.

Syntax:

strrev(string);

Example1:

printf("%s",sterev(str1));

Example1:

strrev(str1);
printf("%s",str1); /* or puts(str1); */
Where, str1 is a character string.

Atmiya University Rajkot

6) strlwr( ) Function :

Syntax: char strlwr(char string);

This function converts given string into lower case letters if it contains any upper case alphabets (A – Z). Other characters remain as it is.

Example1:

```
str1 = "AtMiYa123";
strlwr(str1);
printf("%s", str1);
```

this will print atmiya123 on the screen

Example2:

```
void main()
{
  char s1[20];
  scanf("%s",s1);
  printf("%s",strlwer(s1));
}
```

7) strupr( ) Function :

Syntax: strupr(string);

This function converts given string into upper case letters if it contains any lower case alphabets (a – z). Other characters remain as it is.

Example:

```
str1 = "AtMiYa123";
strupr(str1);
printf("%s", str1);
```

this will print ATMIYA123 on the screen.

Two Dimensional Character Array:

- ✓ The two-dimensional array can be defined as an array of arrays. The 2D array is organized as matrices which can be represented as the collection of rows and columns.
- ✓ 2D character arrays are very similar to 2D integer arrays. We store the elements and perform other operations in a similar manner. A 2D character array is more like a String array. It allows us to store multiple strings under the same name.

Syntax:

```
char string_nm[row size][col size];
```

Where,

Row size: denotes the total no. of strings

Col size: denotes the no. of characters per string.

Example:

```
char [5][10]={"INDIA"; "GUJARAT"; "RAJKOT"; "ATMIYA";"UNIVERSITY";}
```

I	N	D	I	A					
G	U	J	A	R	A	T			
R	A	J	K	O	T				
A	T	M	I	Y	A				
U	N	I	V	E	R	S	I	T	Y

Atmiya University Rajkot

Example:

A Program that accepts 5 names of students and print it in reverse sequence.

```
#include<stdio.h>
#include<conio.h>

vois main()
{
    char name[5][20];
    int i;
    clrscr();
    for(i=0; i<5;i++)
    {
            printf("Enter name");
            scanf("%s",name[i]); // Or gets(name[i]);
    }
    printf("\n\n");
    for(i=4; i>=0;i++)
    {
            printf("Name[%d]:%s \n",i+1,name[i]);
    }
    getch();
}
```

Output:

```
Enter Name: INDIA
Enter Name: GUJARAT
Enter Name: RAJKOT
Enter Name: ATMIYA
Enter Name: UNIVERSITY

Name[ 5 ] : UNIVERSITY
Name[ 4 ] : ATMIYA
Name[ 3 ] : RAJKOT
Name[ 2 ] : GUJARAT
Name[ 1 ] : INDIA
```

Atmiya University Rajkot

. . : : QUESTION BANK : : . .

One Mark Questions.

1. An array is also known as _____ Data Type. – **Derived**
2. An array is indicated by number is known as _____. – **Index Number**
3. Which character is used to terminate a string array? – **NULL Character** *or* **(\0)**
4. What is the collection of elements having similar data type? – **Array**
5. What is the last index of an array? – **n-1**
6. Which function is used to concatenate two strings? – **strcat()**
7. Which function is used to compare two strings? – **strcmp()**
8. What is the return data type of the strcmp()? – **int**
9. What value is return by strcmp(), if both the values are match? – **0 (ZERO)**

Descriptive Questions.

(1) What is an Array? Explain in detail.
- What is an Array?
- Types of an Array with syntax

(2) Explain one dimensional array with an example.
- Description
- Example

(3) Explain two dimensional array with an example.
- Description
- Example

(4) What is a Character Array? Explain in detail.
- What is an Array?
- Character Array with an example

(5) Explain String Handling Function with an example.
- Strcat(), strcmp(), strlen(), strcpy(), strrev(), strupr(), strlwr()
- Examples

(6) Explain Array as a function argument.
- Description
- Example

(7) Any types of programs can ask using Control Structure or an Array.

Atmiya University Rajkot

Unit – 5

Structure & Union

Introduction:

- When we want to store no. of elements having similar data type, the concept of array is used.
- If we want to represent a collection of data items of different types using a single name, then we cannot use an array.
- But sometimes in our program, it is required to store collection of elements that belongs to different-different data types. At that time the concept of structure is used.

What is Structure?

- The **structure** is the collection of elements having different data types grouped under the same name using the **struct** keyword. It is also known as the "**user-defined data type**" that enables the programmer to store different data type records in the Structure. Furthermore, the collection of data elements inside the Structure is termed as the **member**.
- The structure is mainly used to group the no. of data items that are logically related by giving them a single name.
- **Syntax:**

```
struct tag_name
{
        data type member..1;
        data type member..2;
        data type member..3;
        ------------
        ------------
        data type member..n;
};
struct tag_name struct_type_variable;
```

Description:

- The keyword "**struct**" defines the structure. The tag name is the name f the structure which should be meaningful identifier. Member..1, member..2, member..3 are the members of the structure which belongs to any valid C Data type. The template of the structure must be enclosed within curly braces {…} and terminated by a semicolon (;).

Declaring a Structure type variable:

- And in the last you can see one variable which is not belongs to a particular data type. Its data type is structure.
- **Note:**

  Remember one point: - Internally the members of the structure have not any space in the memory at compile time, when they are associated with the structure type variable at that time, they have been given a memory.

  To access the members of the structure the (.) dot is used.

  [.] dot operator is known as "Member Accessing Operator" Or "Member Referencing Operator".

Atmiya University Rajkot

Example:

```
struct student
{
        int RollNo;
        char nm[20];
};
```

Name of Structure
OR
Tag Name

Members of Structure

Declaring a Structure type variable:

```
struct   student   D1, D2;
```

Keyword

Name of structure

Name of accessing variable

Accessing members of Structure:

We cannot access the members of the structure directly like an ordinary variable, we have to use the [.] dot operator with structure type variable to access the members of structure.

Example:

```
D1.RollNo=1;
strcpy(D1.nm,"Atmiya");
D2.RollNo=2;
strcpy(D2.nm,"University");
```

Example Program using Simple Structure

```
#include<stdio.h>
#include<conio.h>
void main( )
{
        struct stud
        {
                int rno;
                char nm[15];
        };
        struct stud s;
        printf("\n Enter your Roll No. :");
        scanf("%d",&s.rno);
        printf("\n Enter your Name :");
        scanf("%s",s.nm);
        printf("\n Roll No. %d : ",s. rno);
        printf("\n Name : %s",s.nm);
        getch( );
}
```

Output: -
Enter Roll No. 12
Enter Name: Atmiya

Roll No: 12
Name : Atmiya

Array within Structure:

When we take an array as a member of a structure, it is called Array within Structure.

Example:

```
struct Employee
{
        int RollNo;
        char nm[20];
};
```

One character array is declared as member of structure. That is within the structure.

Atmiya University Rajkot

Array of structure:

Like an ordinary data type, we can also define an array of structure. When we make structure type variable as an array type, that is called Array of Structure.

Example:

```
struct Book
{
        int b_id;
        Char b_nm[20];
};
struct Book b[2];        // We are making array of structure variable.
```

Example Program a Program of Array of structure

```
#include<stdio.h>
#include<conio.h>
void main()
{
        struct stud
        {
                int r_no;
                char nm[20];
        };
        struct stud S[3];
        int i;
        clrscr();
        for(i=0;i<3;i++)
        {
                printf("\n Enter Roll No :");
                scanf(%d",&S[i].r_no);
                printf("\n Enter Name :");
                scanf("%s",S[i].nm);
        }
        printf("\n     \n");
        for(i=0;i<3;i++)
        {
                printf("\n Roll No : %d",S[i].r_no);
                printf("\n Name : %s",S[i].nm);
        }
        getch();
}
```

Character "S" is a member access variable and it is define as array. That is Array of structure.

Structure as a Function Argument:

- Like a simple variable, the whole structure or array of structure can also be passed as function argument. When the structure type variable is being passed as function argument, we have to keep in mind that the variable which is catching the value, must also be of same data type i.e. same structure type. To do this, structure can be declared globally before main().

Atmiya University Rajkot

Example program: Passing Structure as argument to the function.

```
#include<stdio.h>
#include<conio.h>

void ATMIYA(struct Book)

struct Book
{
        int id;
        char nm[20];
};

void main()
{
        struct Book Z;
        printf("\n Enter Book ID: ");
        scanf("%d",&Z.id);
        printf("\n Enter Book Name: ");
        gets(Z.nm);
        ATMIYA(Z);
        getch();
}

void ATMIYA(struct Book X)
{
        printf("\n Book id=%d",X.id);
        printf("\n Book Name is %s.",X.nm);
}
```

Output:

```
Enter Book ID: 1208
Enter Book Name: Advance C & DS

Book ID=1208
Book Name is Advance C & DS.
```

Union:

- Unions are a concept borrowed from structures and therefore follow the same syntax as structures. However, there is major distinction between them in terms of storage. In structures, each member has its own storage location, whereas all the members of a union use the same location. This implies that, although a union may contain many members of different types, it can handle only one member at a time.
- Like structures, a union can be declared using the keyword union as follows:

```
union item
{
        int m;
        float x;
        char c;
}Z;
```


Atmiya University Rajkot

- This declares a variable Z of type union item. The union contains three members, each with a different data type. However, we can use only one of them at a time. This is due to the fact that only one location is allocated for a union variable, irrespective of its size.

- **Storage of 4 bytes**

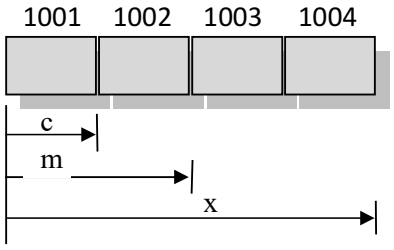

- The compiler allocates a piece of storage that is large enough to hold the largest variable type in the union. In the declaration above, the member x requires 4 bytes which is the largest among the members. Figure above shows how all the three variables share the same address. This assumes that a float variable requires 4 bytes of storage.
- To access a union member, we can use the same syntax that we use for structure members. That is…

  Z.m
  Z.x
  Z.c

  are all valid member variables. During accessing, we should make sure that we are accessing the member whose value is currently stored. For example, the statements such as

  Z.m = 379;
  Z.x = 7859.36;
  printf("%d",Z.m);

  would produce erroneous output (which is machine dependent).
- In effect, a union creates a storage location that can be used by any one of its members at a time. When a different member is assigned a new value, the new value supersedes the previous member's value.

Differences between Structure and Union.

Structure	Union
'struct' keyword is used to declare a structure.	'union' keyword is used to declare a union.

Example: struct stud
{
int r_no;
char nm[20];
}
	Example: union stud
	{
	int r_no;
	char nm[20];
	}

Here each and every member's value stores on its own memory location.	Here all members' value is stored on the memory location of the member which has the largest memory space among all the members.
Practically most widely used.	Rarely used in practical.

Atmiya University Rajkot

Differences between Array and Structure.

Array	Structure
An array is a collection of elements having similar data type.	Structure is a collection of elements having different data type.
In an array the data items are related to only one data type. [same type of data stored sequentially]	The structure is used to store logically related data items.
No keyword is used to declare an array.	The 'struct' keyword is used to declare a structure.
An array has types, like… Single Dimension Multi Dimension	The structure has no such types.
The elements of an array are accessed by their index values.	The elements of structure are accessed by the member access operator.

For Ex:
One Dimensional: int x[10];
Two Dimensional Int x[3][4];
	For Ex:
	struct stud
	{
	int r_no; char nm[20];
	}

Structure within array is not possible.	Array within structure is possible.

Atmiya University Rajkot

. . : : QUESTION BANK : : . .

One Mark Questions.

1. The _____ is the collection of elements having different data types. – **Structure**
2. Structure is known as _____ Data Types. – **User Defined**
3. Union is known as _____ Data Types. – **User Defined**
4. Which keyword is used to define a Structure? – **struct**
5. Which keyword is used to define a Union? – **union**
6. The collection of data variable inside the structure is known as _____ variable. – **Member**
7. What is used to access the members of the structure? – **Dot operator**
8. Dot operator is known as _____. – **Member Accessing Operator**
9. An array as a member of a structure is known as _____. – **Array within Structure**
10. An array as a structure access variable is known as _____. – **Array of Structure**

Descriptive Questions.

(1) What is Structure? Explain structure type variable.
- About Structure
- Declaring a structure type variable
- Example

(2) What is Structure? How to access the member variable of structure?
- About Structure
- Accessing the member variable
- Example

(3) Explain array within structure and array of structure.
- Description of array within structure
- Description of array of structure
- Example

(4) Explain structure as a function argument with an example.
- Description of Structure as a function argument
- Example

(5) Explain Union in detail.
- Description of Union
- Example

(6) What is Union? Explain difference between Structure and Union.
- About Union
- Difference of Structure and Union
- Example

(7) Explain difference between Array and Structure.
- Difference of Array and Structure
- Example

(8) Any type of program of Structure.

Atmiya University Rajkot

ATMIYA UNIVERSITY - RAJKOT

BCA
BScIT
SEM-2

STUDY MATERIAL

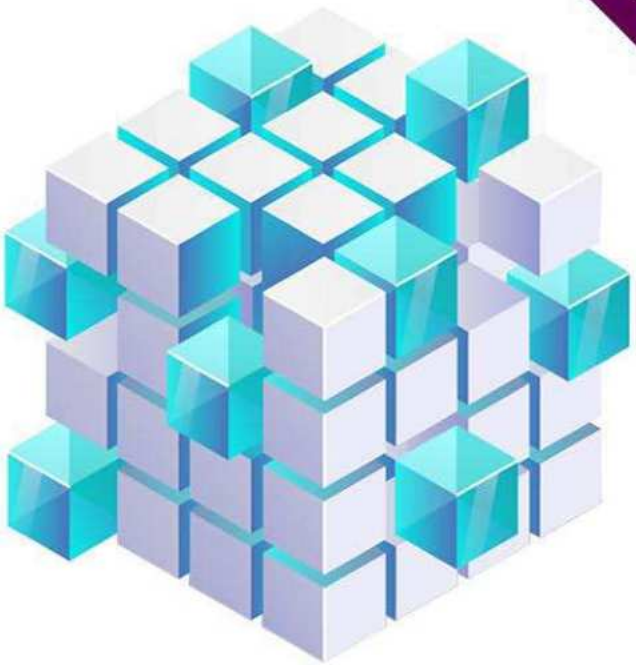

JITENDRA TIMRAI

JAHANVI BHATT

MIRAL KOTHARI

DATA STRUCTURE

Atmiya University Rajkot

Department of Computer Application & Department of Computer Science

Atmiya University
Rajkot

~ INDEX ~

UNIT NO.	UNIT NAME	PAGE NO.
1	**Sorting & Searching Techniques**	**01**
	☙ Pointer	01
	• Advantage of using pointer	02
	• Pointer Arithmetic	02
	• Array & Pointer	03
	• Pointer to Structure	04
	• Static & Dynamic Array	05
	☙ Dynamic Memory allocation functions	07
	• malloc(), calloc(), realloc() and free()	
	☙ Sorting Techniques	10
	• Bubble sort	10
	• Selection sort	11
	• Insertion sort	13
	• Merge sort	14
	☙ Searching Techniques	16
	• Linear search	16
	• Binary search	17
	❖ *Question Bank*	19
2	**Introduction to Data Structure, Stack & Queue**	**21**
	☙ What is Data structure?	21
	• Linear data structure	21
	• Non-linear data structure	22
	☙ Primitive & Non-primitive storage	22
	• Primitive data types	23
	• Non-primitive data type	23
	☙ Stack	24
	• Operation on Stack	24
	• Application of Stack in Recursion	25
	☙ Queue	26
	• Operation on Queue	27
	☙ Circular Queue	28
	❖ *Question Bank*	29
3	**Linked List**	**31**
	☙ What is Linked List?	31
	• Linked List Representation	32
	☙ Types of Linked List	33
	• Singly Linked List	33
	• Singly Circular Linked List	34
	• Doubly Linked List	34
	• Doubly Circular Linked List	36
	☙ Basic Operations on linked list	37
	❖ *Question Bank*	38
4	**Tree**	**41**
	☙ What is Tree?	41
	• Tree's Properties	41
	☙ Types of Trees	42
	• Binary Tree	43

Atmiya University Rajkot

	• Binary Search Tree (BST)
	  ○ Operation on tree
	• AVL tree
	  ○ AVL Rotations
	• Red and Black tree
	  ○ Properties of Red-Black tree
	ᘓ Structure representation in TREE
	❖ *Question Bank*
		43
		44
		46
		47
		50
		50
		51
		52

5	**Graph**	**55**

	ᘓ Basic Introduction
	  • Applications of Graphs
	ᘓ Types of Graphs
	ᘓ Graph Representations
	  • Adjacency Matrix
	  • Adjacency List
	ᘓ Graph Traversal
	  • Breadth First Search
	  • Depth First Search
	ᘓ Shortest Path Algorithms
	  • Kruskal algorithm
	  • Dijkstra's shortest path algorithm
	ᘓ Minimum Spanning Tree
	❖ *Question Bank*
		55
		56
		57
		61
		61
		62
		62
		62
		63
		63
		63
		64
		64
		65

	ᘓ **PAPER STYLE**	67
	ᘓ **MODEL QUESTION PAPER**	68

Atmiya University Rajkot

UNIT-1

Pointers, Sorting & Searching Techniques

What is Pointer?

- A pointer is a variable that stores a memory address. Pointers are used to store the addresses of other variables or memory items. Pointers are very useful for another type of parameter passing, usually referred to as pass by Address. Pointers are essential for dynamic memory allocation.
- Some C programming tasks are performed more easily with pointers, and other tasks, such as dynamic memory allocation, cannot be performed without using pointers. So, it becomes necessary to learn pointers to become a perfect C programmer.
- A pointer is the most powerful feature of the C language. Using the pointer one can get no. of advantages in programming. It has added power and flexibility to the language.
- Pointer is a derived data type in C. It is called derived because it is built from one of the fundamental data types available in C.

How to Use Pointer? Or How Pointer works?

- There are a few important operations, which we will do with the help of pointers very frequently.
  (a) We define a pointer variable,

  (b) Assign the address of a variable to a pointer and

  (c) Finally access the value at the address available in the pointer variable.

- This is done by using unary operator * that returns the value of the variable located at the address specified by its operand.

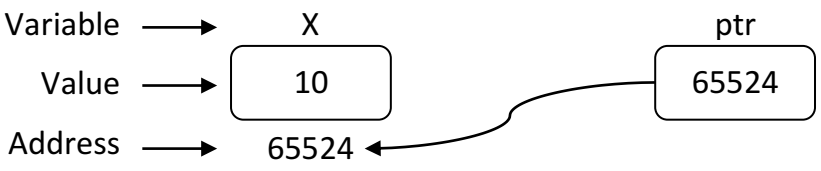

Atmiya University Rajkot

Example:

```
void main()
{
    int X = 10;
    int  *PTR;
    PTR = &X;
    printf("Value of X = %d",X);
    printf("Address of X = %u",&X);
    printf("Value of X = %d",*ptr);          // access the value using pointer
    printf("Address of X = %u",ptr);         // access the address using pointer
}
```

- PTR is a pointer variable that stores the address of variable X.
- The data type of pointer variable ptr and variable X should match because and integer pointer can only hold the address of integer variable.

Advantage of using pointer

- Pointers are more efficient in handling arrays and data tables.
- Pointers provide a way to return more than one value to the functions.
- Pointers allow C to support dynamic memory management.
- Pointers reduce length and complexity of programs.
- They increase the execution speed and thus reduce the program execution time.
- Pointers are helpful in allocation and de-allocation of memory during the execution of the program.
- Pointers enhance the execution speed of a program.
- Passing on arrays by pointers saves lot of memory because we are passing on only the address of array instead of all the elements of an array, which would mean passing on copies of all the elements and thus taking lot of memory space.

Pointer Arithmetic

- A pointer in c is an address, which is a numeric value. Therefore, you can perform arithmetic operations on a pointer just as you can on a numeric value. There are four arithmetic operators that can be used on pointers: ++, --, +, and -

- To understand pointer arithmetic, let us consider that ptr is an integer pointer which points to the address 1000. Assuming 32-bit integers, let us perform the following arithmetic operation on the pointer…

Atmiya University Rajkot

ptr++
(ptr) ++
(1000) + (Size of Integer * Increment by 1 in previous value)
(1000) + (2*1)
1000+2
1002

- After the above operation, the ptr will point to the location 1002 because each time ptr is incremented, it will point to the next integer location which is 2 bytes next to the current location. This operation will move the pointer to the next memory location without impacting the actual value at the memory location. If ptr points to a character whose address is 1000, then the above operation will point to the location 1001 because the next character will be available at 1001.

Array & Pointer

- An array name is a constant pointer to the first element of the array. Therefore, in the declaration –

  int X[50];

  X is a pointer to &X[0], which is the address of the first element of the array X. Thus, the following program fragment assigns ptr as the address of the first element of X –

  int X[10], int *ptr, ptr = X;

- It is legal to use array names as constant pointers, and vice versa. Therefore, *(X + 4) is a legitimate way of accessing the data at X[4].

- Once you store the address of the first element in 'ptr', you can access the array elements using *ptr, *(ptr+1), *(ptr+2) and so on.

- **Example:**

```
#include<stdio.h>
#include<conio.h>

void main()
{
        int X[5], *ptr, i;
        ptr=X;
        for(i=0;i<5;i++)
        {
                pritnf("Enter Value : ");
                scanf("%d ",&X[i]);
        }
        for(i=0;i<5;i++)
        {
                pritnf("\t %d ",*(ptr+i));
        }
        getch();
}
```

Atmiya University Rajkot

☙ Pointer to Structure:

- We can create a pointer that points to the array, same way we can create the pointer that points the structure.
- The pointer to structure is declared by:
  A. Making the structure variable as a pointer
  B. By assigning the address of structure variable to the pointer variable of that type;

- Consider the following declaration:

```
struct XYZ
{
        char name[30];
        int number;
        float price;
}product[2], *ptr;
```

➢ Access member variable of structure using Pointer:

- This statement declares product as array of two elements, each of the type struct inventory. The assignment **ptr = product;** would assign the address of the zeroth element of product to ptr. That is, the pointer ptr will now point to product[0].
- Its members can be accessed using the following notation.

```
ptr -> name
ptr -> number
ptr -> price
```

- The symbol -> is called the arrow operator (also known as member selection operator) and is made up of a minus sign and a greater than sign. Note that ptr -> is simply another way of writing product[0].

- When the pointer ptr is incremented by one, it is made to point to the next record, i.e., product[1]. The following for statement will print the values of members of all the elements of product array.

```
for( ptr = product; ptr < product+2; ptr++)
{
        printf(" %s  %d  %f ", ptr->name, ptr->number, ptr->pricr);
}
```

- We could also use the notation (*ptr).variable to access the member variable. The parentheses around *ptr are necessary because the member operator '.' has a higher precedence than the operator *.

Atmiya University Rajkot

Static Array v/s Dynamic Array

- An array created at compile time by specifying size in the source code has a fixed size and cannot be modified at run time. The process of allocating memory at compile time is known as **static memory** allocation and the array that receives static memory allocation are called **static arrays.**
- This approach works fine as long as we know exactly what our data requirements are. Suppose we don't know what our data requirements are in that case we can use dynamic arrays.
- In C, it is possible to allocate memory to arrays at run time. This feature is known as **dynamic memory** allocation and the arrays created at run time are called **dynamic arrays**. Dynamic arrays are created using pointer variables and memory management functions **malloc**, **calloc** and **realloc**.

Differences between Static Array and Dynamic Array.

Static Array	Dynamic Array
The array that is created by specifying size, at compile time (in source code), is known as static array.	The array that is created at run time is known as dynamic array.
The size of array can't change at run time as it is static.	The size of array can be modifying at run time as it is dynamic.
This approach works fine as long as you know the size of an array in advance.	This approach works fine or beneficial because, the size of an array specified at run time.
Static arrays are created just by specifying size of array at compile time.	Dynamic arrays are created by using pointer variable and memory management functions.
Static arrays are not useful to create any data structures, but only used to store multiple values.	Dynamic arrays are useful to create and manipulate data structures like linked lists, stacks and queues.
Example: int a[5];	**Example:** int *ptr; ptr=(int*)calloc(5,sizeof(int));

How to call C functions in a program?

- There are two ways that a C function can be called from a program. They are,
  1. Call by value
  2. Call by reference

[1] Call by value:

- In call by value method, the value of the variable is passed to the function as parameter.
- The value of the "actual parameter" (The parameters that appear in function calls) cannot be modified by "formal parameter" (The parameters that appear in function declarations). In short original value is can't change or modified in program.
- Different Memory is allocated for both actual and formal parameters. Because, value of actual parameter is copied to formal parameter.

Amrita University Reikot

- **For Example:**

```
#include<stdio.h>
#include<conio.h>
int sum(int,int);
void main()
{
    int a, b, c;
    pritnf("Enter two number");
    scanf("%d %d", &a, &b);
    c = sum(a, b);
    printf("Sum = %d", c);
    getch();
}
int sum(int x, int y)
{
        return (x + y);
}
```

[2] Call by reference:

- In call by reference method, the address of the variable is passed to the function as parameter.
- The value of the actual parameter can be modified by formal parameter. In short original value is changed or modified in program.
- Same memory is used for both actual and formal parameters since only address is used by both parameters.

- **Example:**

```
#include<stdio.h>
#include<conio.h>
int  sum(int *, int *);

void main()
{
    int a, b;
    pritnf("Enter two number");
    scanf("%d %d", &a, &b);
    printf("Sum = %d", sum(&a, &b));
    getch();
}
int  sum(int *x, int *y)
{
    return *x + *y;
}
```

Atmiya University Rajkot

☙ Dynamic Memory Allocation functions

- The C programming language provides several functions for memory allocation and management.
- An array is a collection of a fixed number of values. Once the size of an array is declared, you cannot change it. Sometimes the size of the array you declared may be insufficient. To solve this issue, you can allocate memory manually during run-time. This is known as dynamic memory allocation in C programming.
- C provides four functions to achieve these tasks. These functions can be found in the <stdlib.h> header file.

1. malloc()
2. calloc()
3. free()
4. realloc()

(1) malloc()

- The name "malloc" stands for memory allocation.
- The malloc() function reserves a block of memory of the specified number of bytes. And, it returns a pointer of void which can be casted into pointers of any form.

- **Syntax:**

```
ptr = (castType*) malloc(n*size);
```

- **Example:**

```
void main()
{
    int n, i, *ptr, sum = 0;
    printf("Enter number of elements: ");
    scanf("%d", &n);
    ptr = (int*) malloc(n * sizeof(int));

    for(i = 0; i < n; ++i)
    {
        printf("Enter Value : ");
        scanf("%d", ptr + i);
        sum = sum + *(ptr + i);
    }
    printf("Sum = %d", sum);
    getch();
}
```

Atmiya University Rajkot

(2) calloc()

- The name "calloc" stands for contiguous allocation.
- The malloc() function allocates memory and leaves the memory uninitialized, whereas the calloc() function allocates memory and initializes all bits to zero.

- **Syntax:**

```
ptr = (castType*)calloc(n, size);
```

- **Example:**

```
void main()
{
    int n, i, *ptr, sum = 0;
    printf("Enter number of elements: ");
    scanf("%d", &n);
    ptr = (int*) calloc(n, sizeof(int));
    for(i = 0; i < n; ++i)
    {
        printf("Enter Value : ");
        scanf("%d", ptr + i);
        sum = sum + *(ptr + i);
    }
    printf("Sum = %d", sum);
    getch();
}
```

(3) free()

- Dynamically allocated memory created with either calloc() or malloc() doesn't get freed on their own. You must explicitly use free() to release the space.

- **Syntax:**

```
free(ptr);
```

- **Example:**

```
void main ()
{
    char *str;
    str = (char *) malloc(20);
    strcpy(str, "Atmiya University");
    printf("%s", str);
    free(str);          // Free the allocated memory
    getch();
}
```

Atmiya University Rajkot

(4) realloc()

- "realloc" or "re-allocation" method in C is used to dynamically change the memory allocation of a previously allocated memory. In other words, if the memory previously allocated with the help of malloc or calloc is insufficient, realloc can be used to dynamically re-allocate memory. re-allocation of memory maintains the already present value and new blocks will be initialized with default garbage value.

- **Syntax:**

```
ptr = realloc(ptr, x);
```

- **Example:**

```
void main()
{
    int *ptr, i , n1, n2;
    printf("Enter size: ");
    scanf("%d", &n1);
    ptr = (int*) malloc(n1 * sizeof(int));
    for(i = 0; i < n1; i++)
    {
        scanf("%d",ptr + i);
    }
    printf("\nEnter the new size: ");
    scanf("%d", &n2);
    ptr = realloc(ptr, n2 * sizeof(int));          // rellocating the memory
    for(i = n1; i < n2; i++)
    {
        scanf("%d", ptr + i);
    }
    getch();
}
```

Difference between malloc & calloc:

In summary, the key difference is in the initialization of the allocated memory. Both functions allocate dynamic memory on the heap.

Malloc does not initialize the memory (contains garbage values), while calloc initializes the allocated memory to zero.

Calloc requires two arguments (number of elements and size of each element), while malloc requires only one argument (total size in bytes).

Calloc can be slightly slower than malloc since it initializes the memory, but the difference might not be noticeable in many cases.

If you need memory that is already initialized to zero, calloc() might be a more convenient choice. However, keep in mind that calloc() may be slightly slower than malloc() due to the initialization step.

Atmiya University Rajkot

☙ Sorting Techniques:

Sorting is the process of arranging the data or information in some logical order. This logical order may be ascending or descending in case of numeric values.

Various techniques are available to sort the data depending upon length of the data, speed of sorting, number of swapping being done during the procedure of sorting.

Techniques can be listed as follows:

1. Bubble sort
2. Selection sort
3. Insertion sort
4. Merge sort
5. Quick Sort

[1] Bubble Sort

Bubble Sort is oldest and simplest sorting technique of use. It can be said as a comparison sort. The algorithm gets its name from the way smaller elements "bubble" to the top of the list. The bubble sort works by comparing each item in the list with the next and swapping then if required. The algorithm repeats this process until all the items are in the correct order.

- **Advantages:**
  One of the primary advantages of the bubble sort is that it is fairly easy to write (about 5 lines of code). It is also fairly easy to understand in terms of a sorting algorithm.

- **Disadvantages:**
  Unfortunately, the bubble sort is also a relatively slow algorithm, and therefore, should not be used on large tables.

- **Example:**

```
#include<stdio.h>
#include<conio.h>
#define size 10
void bbl_sort(int[]);
```

Atmiya University Rajkot

```
void main()
{
    int x[size],i;
    clrscr();
    for(i=0;i<size;i++)
    {
            printf("Enter Value %d : ",i+1);
            scanf("%d",&x[i]);
    }
    bbl_sort(x);
    getch();
}

void bbl_sort(int x[])
{
    int i,j,temp;
    for(i=0;i<size-1;i++)
    {
            for(j=0;j<size-i-1;j++)
            {
                    if(x[j]>x[j+1])
                    {
                            temp=x[j];
                            x[j]=x[j+1];
                            x[j+1]=temp;
                    }
            }
    }
    for(i=0;i<size;i++)
    {
            printf(" %d",x[i]);
    }
}
```

[2] Selection Sort:

Selection sort is another technique to arrange the data in proper order. This type of sorting is called "Selection Sort" because it works by repeatedly selecting smallest element.

Atmiya University Rajkot

- **How it works?**

  Find first smallest element & exchange it with first position. Then find second smallest element & exchange it with second position if it is smaller than the first element. Continue this up to an array which is not sorted.

  Repeatedly find next large/small element and swap it to its final position. Find the minimum value. Swap it with the first position.

  Repeat the step above for remain list.

- **Example:**

```
#include<stdio.h>
#include<conio.h>
#define size 10
void sel_sort(int[]);
void main()
{
    int x[size],i;
    clrscr();
    for(i=0;i<size;i++)
    {
            printf("Enter Value %d : ",i+1);
            scanf("%d",&x[i]);
    }
    sel_sort(x);
    getch();
}
void sel_sort(int x[])
{
    int i,j,temp;
    for(i=0;i<size;i++)
    {
            for(j=i+1;j<size;j++)
            {
                    if(x[i]>x[j])
                    {
                            temp=x[j];
                            x[j]=x[i];
                            x[i]=temp;
                    }
            }
    }
```

Atmiya University Rajkot

```
    for(i=0;i<size;i++)
    {
            printf(" %d",x[i]);
    }
}
```

[3] Insertion Sort:

Insertion sort works similar to the sorting of playing cards in hands. It is assumed that the first card is already sorted in the card game, and then we select an unsorted card. If the selected unsorted card is greater than the first card, it will be placed at the right side; otherwise, it will be placed at the left side. Similarly, all unsorted cards are taken and put in their exact place.

The same approach is applied in insertion sort. The idea behind the insertion sort is that first take one element; repeat it through the sorted array.

- **Insertion sort has various advantages such as:**
  - It is simple implementation.
  - Efficient for small data sets.
  - It is appropriate for data sets that are already sorted.
- **Disadvantage of Insertion sort:**
  - It is simple to use but it is not appropriate for large data sets.
- **Example:**

```
#include<stdio.h>
#include<conio.h>
#define size 10
void insr_srch(int[]);

void main()
{
    int i, x[size];
    clrscr();
    for (i = 0; i < size; i++)
    {
            printf("Enter value %d : ",i+1);
            scanf("%d",&x[i]);
    }
    insr_srch(x);
    getch();
}
```

Atmiya University Rajkot

```
void insr_srch(int x[])
{
   int i,j,temp;
   for (i=1;i<size;i++)
   {
         temp=x[i];
         j=i-1;
         while((temp<x[j]) && (j>=0))
         {
               x[j+1]=x[j];
               j--;
         }
         x[j+1] = temp;
   }
   printf("After Sorting :\n");
   for (i=0;i<n;i++)
   {
         printf("  %d",x[i]);
   }
}
```

[4] Merge Sort:

Merge Sort uses divide & conquer strategy to sort the elements.

The merge sort splits the list to be sorted into 2 equal levels and place them in separate arrays.

Both the list in a merge sort must be in a sorted order, otherwise first of all sort both the list individually by using any other sorting technique, the by comparing values of both the lists, sort it finally in the 3rd list. (In short, this technique requires total no. of 3 arrays).

- **Example:**

```
#include<stdio.h>
#include<conio.h>
void main()
{
   int x[5], y[5], z[10], i, j=0, k=0;
   clrscr();
```

Atmiya University Rajkot

```
    for(i=0 ; i<5 ; i++)
    {
            printf("Enter Value : ");
            scanf("%d",&x[i]);
    }
    for(i=0;i<5;i++)
    {
            printf("Enter Value : ");
            scanf("%d",&y[i]);
    }
    i=0;
    while(k<10)
    {
            if(x[i]<y[j] && i<5)
            {
                    z[k++]=x[i++];
            }
            else if(x[i]>y[j] && j<5)
            {
                    z[k++]=y[j++];
            }
            else if(i<5)
            {
                    z[k++]=x[i++];
            }
            else
            {
                    z[k++]=y[j++];
            }
    }
    for(i=0;i<10;i++)
    {
            printf("  %d",z[i]);
    }
    getch();
}
```

Atmiya University Rajkot

☙ Searching Techniques:

Searching technique refers to finding a key element among the list of elements. If the given element is present in the list, then the searching process is said to be successful. If the given element is not present in the list, then the searching process is said to be unsuccessful.

C language provides two types of searching techniques. They are as follows –

- Linear search
- Binary search

[1] Linear Search:

Linear search is also called as sequential search algorithm. It is the simplest searching algorithm. In Linear search, we simply traverse the list completely and match each element of the list with the item whose location is to be found. If the match is found, then the location of the item is returned; otherwise, the algorithm returns NULL. It is widely used to search an element from the unordered list.

➢ Advantage of Linear Search:

- It is the simplest searching technique.
- It does not expect the list to be sorted.

➢ Disadvantage of Linear Search:

- It consumes more time and reduces the power of system.

➢ Example:

```
#include<stdio.h>
#include<conio.h>
void lnr_srch(int[]);
void main()
{
   int i,x[10],z;
   clrscr();
   for(i=0;i<10;i++)
   {
         printf("Enter Value %d : ",i+1);
         scanf("%d",&x[i]);
   }
   lnr_srch(x);
   getch();
}
```

Atmiya University Rajkot

```
void lnr_srch(int x[])
{
    int z,i,flag=0;
    printf("\nEnter Element you want to search : ");
    scanf("%d",&z);
    for(i=0;i<10;i++)
    {
            if(x[i]==z)
            {
                    printf("Value %d is found at no %d.",z,i+1);
                    flag=1;
                    break;
            }
    }
    if(flag==0)
    {
            printf("Search Unsuccessful..");
    }
}
```

[2] Binary Search:

Binary search is the search technique that works efficiently on sorted lists. Hence, to search an element into some list using the binary search technique, we must ensure that the list is sorted.

Binary search follows the divide and conquer approach in which the list is divided into two parts, and the item is compared with the middle element of the list. If the match is found then, the location of the middle element is returned. Otherwise, we search into either of the part depending upon the result produced through the match.

- **Example:**

```
#include<stdio.h>
#include<conio.h>
#define size 10
void bin_search(int []);
```

Atmiya University Rajkot

```
void main()
{
    int a[size], i;
    clrscr();
    printf("Enter value in Ascending Order...");
    for(i=0; i<size; i++)
    {
            printf("\n Value %d : ",i+1);
            scanf("%d", &a[i]);
    }
    bin_search(a);
    getch();
}
void bin_search(int a[])
{
    int key, flag=0, first=0, last=size-1, mid=(first+last)/2;
    printf("\n Enter element to find : ");
    scanf("%d", &key);
    while((flag==0)&&(last>=first))
    {
            if(key==a[mid])
            {
                    printf("\n %d found at position %d.",key,mid+1);
                    flag=1;
                    break;
            }
            else if(key<a[mid])
            {
                    last=mid-1;
            }
            else
            {
                    first=mid+1;
            }
            mid=(first+last)/2;
    }
    if(flag==0)
    {
            printf("\n Value not found.");
    }
}
```

Atmiya University Rajkot

Question Bank: (1 Mark Questions)

1) Which searching technique is known as sequential search? – **Linear Search**
2) Which sort only compares adjacent elements? – **Bubble Sort**
3) Which sort works similar to the sorting of playing cards in hands? – **Insertion Sort**
4) Which sort should not be used on large amount of data? – **Bubble Sort**
5) Which sort works by repeatedly finding smallest element from data? – **Selection Sort**
6) Which searching techniques required sorted list to search a particular data? – **Binary Search**
7) Which technique is used to search element from unsorted list? – **Linear Search**
8) Which searching technique consumes more time and reduces the power of system? – **Linear Search**
9) Which searching technique follows the divide and conquers approach? – **Binary Search**
10) Which sorting technique required sorted list? – **Merge Sort**

Atmiya University Rajkot

Question Bank: (7 Marks Questions)

1) What is sorting technique? Explain Bubble sort.
   Ans. Sorting Technique
   Bubble Sort
   Advantages
   Disadvantages

2) What is sorting technique? Explain Selection sort.
   Ans. Sorting Technique
   Selection Sort
   How it works?

3) What is sorting technique? Explain Insertion sort.
   Ans. Sorting Technique
   Insertion Sort
   Advantages
   Disadvantages

4) What is sorting technique? Explain Merge sort.
   Ans. Sorting Technique
   Merge Sort

5) What is Searching Techniques? Explain Linear Search.
   Ans. Search Techniques
   Linear Search
   Advantages
   Disadvantages
   Example

6) What is Searching Techniques? Explain Binary Search.
   Ans. Searching Techniques
   Binary Search
   Example

7) Any type of program from this chapter.
   Ans. Program code

Atmiya University Rajkot

UNIT-2

Introduction to Data Structure, Stack & Queue

What is Data structure?

A data structure is a specialized format for organizing, processing, retrieving and storing data.

Data Structure can be defined as the group of data elements which provides an efficient way of storing and organizing data in the computer so that it can be used efficiently. Some examples of Data Structures are arrays, Linked List, Stack, Queue, etc.

A data structure is a technique of storing and organizing the data in such a way that the data can be utilized in an efficient manner. In computer science a data structure is designed in such a way that it can work with various algorithms.

A data structure is classified into two categories:

- **Linear data structure**
- **Non-linear data structure**

Now let's have a brief look at both these data structures.

What is the linear data structure?

A linear data structure is a structure in which the elements are stored sequentially, and the elements are connected to the previous and the next element. As the elements are stored sequentially, so they can be traversed or accessed in a single run. The implementation of linear data structures is easier as the elements are sequentially organized in memory. The data elements in an array are traversed one after another and can access only one element at a time.

The types of linear data structures are Array, Queue, Stack, and Linked List. Let's discuss each linear data structure in detail.

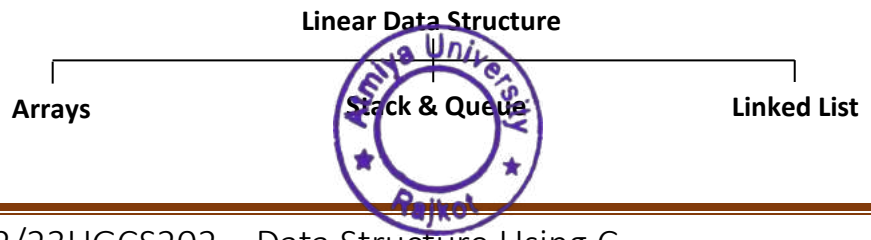

Marwadi University Rajkot

- **Array:** An array consists of data elements of a same data type. For example, if we want to store the roll numbers of 10 students, so instead of creating 10 integer type variables, we will create an array having size 10. Therefore, we can say that an array saves a lot of memory and reduces the length of the code.

- **Stack:** It is linear data structure that uses the LIFO (Last In-First Out) rule in which the data added last will be removed first. The addition of data element in a stack is known as a push operation, and the deletion of data element form the list is known as pop operation.

- **Queue:** It is a data structure that uses the FIFO rule (First In-First Out). In this rule, the element which is added first will be removed first. There are two terms used in the queue **front** end and **rear** The insertion operation performed at the back end is known ad enqueue, and the deletion operation performed at the front end is known as dequeue.

- **Linked list:** It is a collection of nodes that are made up of two parts, i.e., data element and reference to the next node in the sequence.

➢ What is a Non-linear data structure?

A non-linear data structure is also another type of data structure in which the data elements are not arranged in a contiguous manner. As the arrangement is non-sequential, so the data elements cannot be traversed or accessed in a single run. In the case of linear data structure, element is connected to two elements (previous and the next element), whereas, in the non-linear data structure, an element can be connected to more than two elements.

Non-Linear Data Structure

Tree **Graph**

Trees and **Graphs** are the types of non-linear data structure.

➢ Primitive and non-primitive Storage

In C, each variable has a specific data type, where a data type tells us the size, range and the type of a value that can be stored in a variable.

Atmiya University Rajkot

❖ Primitive data types

Primitive data type is a data type that can hold a single value in a specific location whereas the non-linear data type can hold multiple values either in a contiguous location or random locations

The examples of primitive data structure are float, character, integer and pointer. The value to the primitive data structure is provided by the programmer. The following are the four primitive data structures:

- **Integer:** The integer data type contains the numeric values. It contains the whole numbers that can be either negative or positive. When the range of integer data type is not large enough then in that case, we can use long.

- **Real (Float):** The float is a data type that can hold decimal values. When the precision of decimal value increases then the Double data type is used.

- **Boolean:** It is a data type that can hold either a True or a false value. It is mainly used for checking the condition.

- **Character:** It is a data type that can hold a single character value both uppercase and lowercase such as 'A' or 'a'.

- **Pointer**: A pointer is a reference to a data structure. A pointer is a variable, which is pointing to another variable's addresses.

❖ Non-primitive data type

The non-primitive data type is a kind of data structure that can hold multiple values either in a contiguous or random location. The non-primitive data types are defined by the programmer. The non-primitive data type is further classified into two categories, i.e., linear and non-linear data structure.

In case of linear data structure, the data is stored in a sequence, i.e., one data after another data. When we access the data from the linear data structure, we just need to start from one place and will find other data in a sequence.

Atmiya University Rajkot

Stack:

Definition and Concept

What is Stack?

A Stack is a linear data structure that follows the **LIFO (Last-In-First-Out)** principle. Stack has one end. It contains only one pointer **tos (Top of Stack)** pointing to the topmost element of the stack. Whenever an element is added in the stack, it is added on the top of the stack, and the element can be deleted only from the stack. In other words, a stack can be defined as a container in which insertion and deletion can be done from the one end known as the top of the stack.

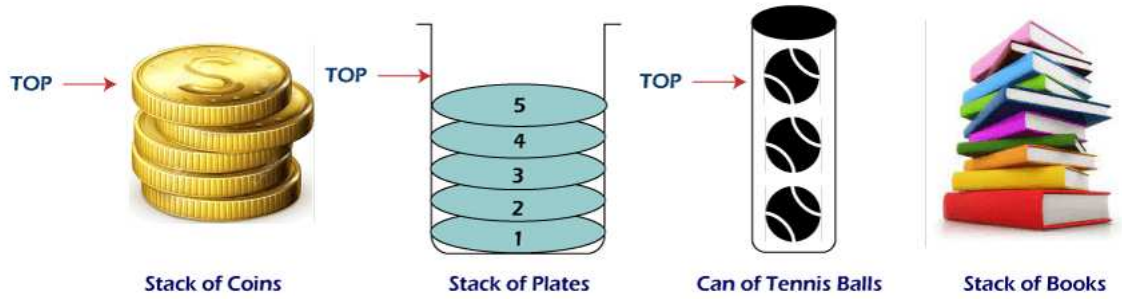

Operation on Stack

The following are some common operations implemented on the stack:

- **Push():**

  When we insert an element in a stack then the operation is known as a push. If all the elements occupy Stack memory and the Stack is full then the Stack overflow condition occurs.

  Push Operation

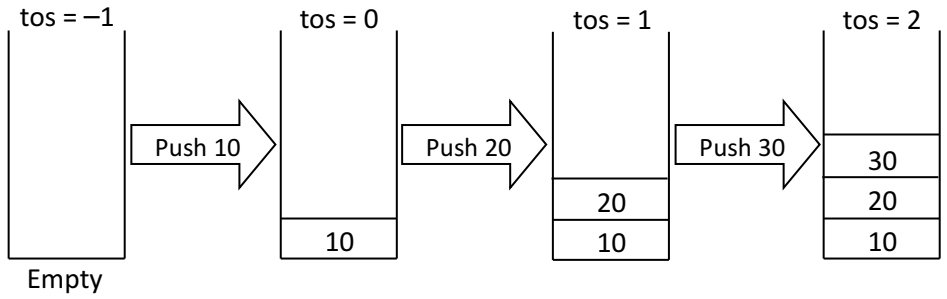

- **Pop():**

  When we delete an element from the stack, that operation is known as a pop. If the stack is empty means that no element exists in the stack, this state is known as a Stack underflow state.

Atmiya University Rajkot

Pop Operation

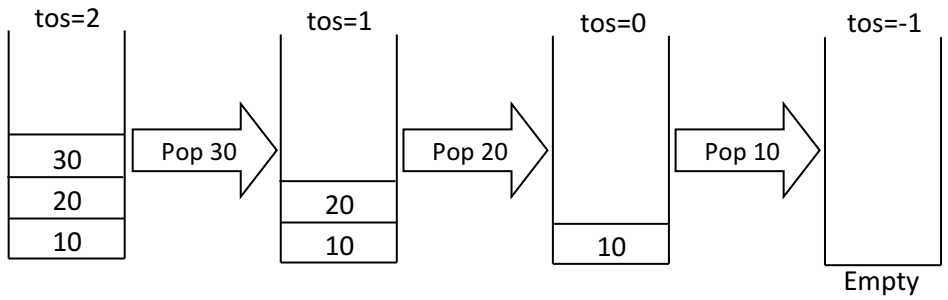

- **Peek():**

  If we want to access some information stored at some location in a stack then peek operation is required. In this operation we just move the pointer to the desired location and then fetch the information associated with that location. In short it returns the element at the given position.

- **Change():**

  Update operation is required when the content of some location in a stack is to be changed. Suppose one wants to update information at any particular location in the Stack. We move pointer to that particular location from the top of the stack and input the new value of that location. In short it updates the element at the given position.

- **Display():**

  It prints all the elements available in the stack. It displays from first to tos index value.

❖ Application of Stack in Recursion

The example of recursion as an application of stack is keeping books inside the drawer and the removing each book recursively.

- **Recursion:** The recursion means that the function is calling itself again. To maintain the previous states, the compiler creates a system stack in which all the previous records of the function are maintained.

Atmiya University Rajkot

- A program for find the factorial of n value.

```
main()
{
        int z, n=5;
        z=xyz(n);
        printf("%d", z);
}
```

```
xyz(int n)
{
        if(n==1)
            return 1;
        else
            return n*xyz(n-1);
}
```

Function Call	Value of n	Execution	Argument	
xyz(n)	n = 1	return 1;		[4]
xyz(n)	n = 2	n*xyz(n-1);	1	[3]
xyz(n)	n = 3	n*xyz(n-1);	2	[2]
xyz(n)	n = 4	n*xyz(n-1);	3	[1]
xyz(n)	n = 5	n*xyz(n-1);	4	[0]

..::STACK::..

When a function is called, it occupies memory in the stack to store details about the execution of the function. And when the function ends, the memory occupied by it is also released. Now in recursion, as we know a function is called in itself. Hence at every function call, a block of memory is created in the stack to hold the information of the currently executing function. When the function ends, it returns to its calling statement written in the outer function i.e., an outer function is resumed from where it stopped.

☙ Queue:

❖ Definition and Concept

A queue is a linear data structure used to represent a linear list and permits deletion to be performed at one end of the list (called the front of the queue) and the insertion at the other (called the rear of the queue).

Unlike stacks, a queue is open at both its ends. One end is always used to insert data (enqueue) and the other is used to remove data (dequeue). Queue follows First-In-First-Out methodology, i.e., the data item stored first will be accessed first.

A real-world example of queue can be a single-lane one-way road, where the vehicle enters first, exits first. More real-world examples can be seen as queues at the ticket windows and bus-stops.

A queue can be defined as an ordered list which enables insert operations to be performed at one end called REAR and delete operations to be performed at another end called FRONT.

Atmiya University Rajkot

- This makes queue as FIFO (First in First Out) data structure, which means that element inserted first will be removed first.

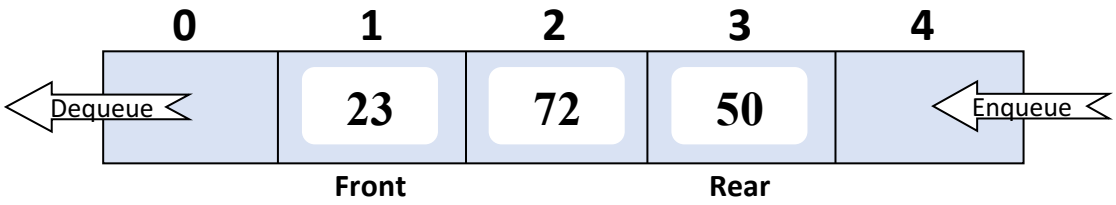

Diagram:

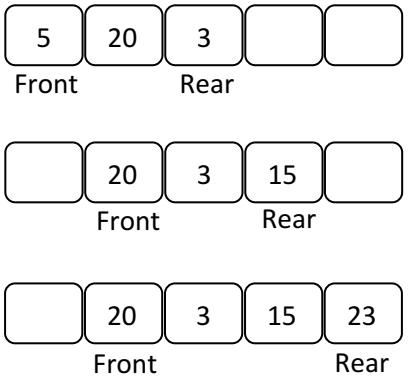

❖ Example of a queue, in the real world is:

→ A line at the bank.
→ A line at bus stop.
→ A line at petrol pump.

❖ **Operation on Queue**

Unlike arrays and linked lists, elements in the queue cannot be operated from their respective locations. They can only be operated at two data pointers, front and rear. Also, these operations involve standard procedures like initializing or defining data structure, utilizing it, and then wholly erasing it from memory. Here, you must try to comprehend the operations associated with queues:

- **Enqueue** (Push) – Insertion of elements to the queue is known as Enqueue.
- **Dequeue** (Pop) – Removal of elements from the queue is known as Dequeue.
- **Display** – Display all elements starting from front to ending from rear position.

❖ **Limitations of Queue**

We can only add indexes 0 and 1 only when the queue is reset (when all the elements have been dequeued).

We can't insert the new element at first empty position, till the last element did not remove from queue.

Atmiya University Rajkot

Circular Queue:

- Let we have an array Q that contain n elements in which Q[0] comes after Q[n]. When this technique is used to construct a queue then the queue is called circular queue.
- In other word we can say that a queue is called circular when the last position of a queue just comes before the first position.
- Figure related a circular queue:

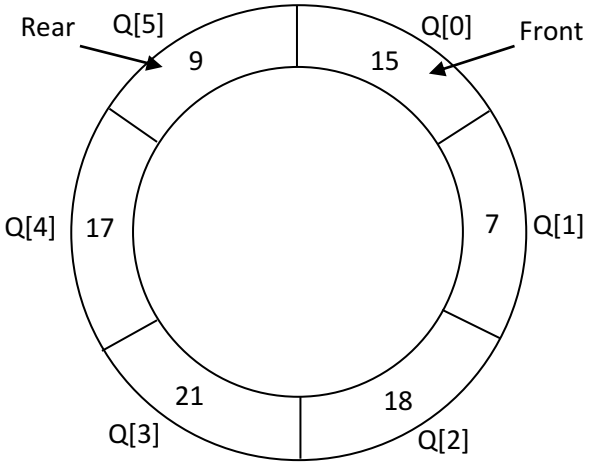

❖ As per above figure, in a circular queue

- If the queue is a full then front is at the first position and rear is at the last position. If user delete first element, then instead of increasing rear = rear + 1, we reset rear = 0.
- If queue contains only one element i.e. front = rear and suppose that element is removed then the front & rear pointers now assigned -1 to indicate that the queue is empty.

❖ Advantages of circular queue:

- In a circular queue when rear=n, if we insert an element then this element is assigned to Q[0]
- i.e. instead of increasing rear to n+1. Be reset rear to 0.
- In a simple queue when rear=n, if we insert an element then displays message "queue is full", so you cannot insert.
- In a circular queue memory cannot wasted and we can also insert element at the position from where one element is deleted. While in simple queue, memory is wasted when we perform deletion operation.

Atmiya University Rajkot

Question Bank: (1 Mark Questions)

1) A data structure is classified into _____ categories. – **Two**
2) How many type(s) of data structure is/are available in C? – **2**
3) Which type of data structure is Queue? – **Linear type**
4) Which principle followed by Stack in DS? – **LIFO**
5) Which data type that can hold either a True or a False value? – **Boolean**
6) The first element to be inserted will be removed last, that type of method is known as _____. – **LIFO**
7) Which type of data structure is Queue in C? – **FIFO**
8) In which method last entered value is stay at top of the position in C? – **Stack**
9) Insert data is known as _____ operation in stack. – **Push**
10) Which operation is used to remove or delete the data from stack? – **POP**
11) A line at the bus stop is an example of _____. – **Queue**
12) Which value is deleting in Queue of DS? – **First**
13) In which type of method Q[0] comes after the Q[n] in DS? – **Circular Queue**
14) What is the value of front while Queue is empty? – **-1**
15) How many element(s) is/are in Queue while rear and front got same position? – **1**
16) Which types of situations occurred while entered element got last position in Queue? – **Overflow**
17) Insertion of elements to the queue is known as _____. – **Enqueue**
18) Removal of elements from the queue is known as _____. – **Dequeue**
19) Which value is assigned to front and rear after deletion of last value of Queue? – **-1**
20) What is an example of nonlinear data structure? – **Tree, Graph**
21) If in an array implementation of circular queue, the elements were inserted in the order 10, 20, 30 and 40 and the array now looks like

30	40	10	20

then the value of front is _____ and value of rear is _____. – **2, 1**

Atmiya University Rajkot

Question Bank: (5/7 Marks Questions)

1) What is Data Structure? Explain Linear Data Structure.
   Ans. About Data Structure
   Linear Data Structure

2) What is Data Structure? Explain Non-Linear Data Structure.
   Ans. About Data Structure
   Non-Linear Data Structure

3) What is Data Structure? Explain Primitive and Non primitive data type.
   Ans. About Data Structure
   Primitive data type
   Non primitive data type

4) What is Stack? Explain operation on stack.
   Ans. Concept of Stack
   Operations: Push, Pop, Display, Delete,

5) Explain the application on stack in recursion.
   Ans. Explanation of Stack in Recursion

6) What is Queue? Explain operation on Queue.
   Ans. Concept of Queue
   Operations: Enqueue, Dequeue, Display, Update

7) What is Circular Queue? Explain advantages of Circular Queue.
   Ans. Concept of Circular Queue
   Operations: Enqueue, Dequeue, Display, Update

8) Write a program of Stack.
   Ans. Program Code

9) Write a program of Queue.
   Ans. Program Code

10) Write a program of Circular Queue.
    Ans. Program Code

Atmiya University Rajkot

UNIT-3

Linked List

What is Linked List?

Definition

A linked list is a linear data structure that stores a collection of data elements dynamically.

Linked List can be defined as collection of objects called nodes that are randomly stored in the memory.

A node contains two fields, the information stored in a linked list and the pointer which contains the address of the next node in the memory.

Nodes represent those data elements, and links or pointers connect with each node.

The last node contains null in its second field because it will point to no node.

A linked list can grow and shrink its size, as per the requirement.

It does not waste memory space.

Concept:

- The computers are used in data processing to perform operations like deletion of information, insertion of information, updating information, report writing etc.
- Fixed length memory storage (array) is not always possible to perform above task.
- Linked list is a very common data structure often used to store similar data in memory. While the elements of an array occupy contiguous memory locations, those of a linked list are not constrained to be stored in adjacent locations.
- A linked list is defined a collection of nodes (structures).
- Where each node is divided in to two or more parts as following:
  1. Information
  2. Pointers to next node.
- Where information part may consist of one or more fields & the last node of the list contain "NULL ('\0')" in the pointer fields.
- The pointer contains the address of the location where next information is stored.

Atmiya University Rajkot

- A linked list allocation storage method can result in efficient use of computer memory and computer time.
- In other words, a linked list consists of series of structure, which are not necessarily contiguous. Each structure contains one or more than one contiguous information fields and a pointer to a structure containing its successor.

❖ **Structure representation in linked list**

```
struct TagName
{
    Data type1 Field1;
    Data type2 Field2;
    …
    …
    …
    Data type n Field n;
    struct Tag Name *Next;
};
```

➢ Linked List Representation

Linked list can be visualized as a chain of nodes, where every node point to the next node.

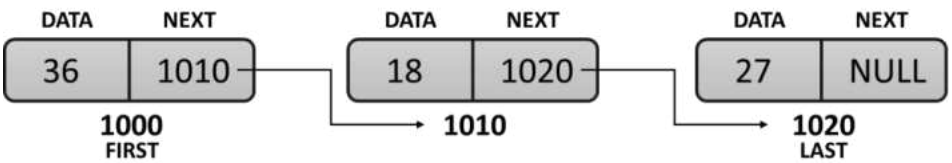

As per the above illustration, following are the important points to be considered.

- Linked List contains a link element called first.
- Each link carries a data field(s) and a link field called next.
- Each link is linked with its next link using its next link.
- Last link carries a link as null to mark the end of the list

➢ Uses of Linked List

- The list is not required to be contiguously present in the memory. The node can reside anywhere in the memory and linked together to make a list. This achieves optimized utilization of space.
- List size is limited to the memory size and doesn't need to be declared in advance.
- Empty node cannot be present in the linked list.
- We can store values of primitive types or objects in the singly linked list.

Atmiya University Rajkot

Types of Linked List

Following are the various types of linked list.

Singly Linked List

- Singly linked list is also known as a linear linked list or one-way linked list.
- In this Item navigation direction is forward only.
- In singly linked list each node is divided in two parts.
- First part contains the information of the elements.
- Second part called the link field or next pointer field contains the address of the next node in the list.
- Address part of each node contains address of the next node.
- But address part of last node contains "NULL" which indicates the last node of list.

Example:

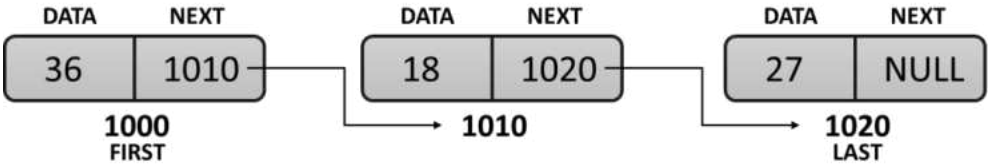

- The above figure illustrates a linked list structure with 3 nodes, each node containing one information field(data) and pointing to next node.
- A linked list also contains a list pointer variable called 'First' which contains the address of the first node in the list.
- The arrow operator indicates that there is a link between nodes. If there is no node in the list, the list is called NULL list or empty list.

Advantages:

- Singly linked list is easy to understand & implement.
- It is easy to insert & delete node from list.

Disadvantages:

- Time consuming process for searching records.
- It provides only one way traversal so; we cannot go back in the list.

Atmiya University Rajkot

Singly Circular Linked List:

- A linked list in which last node points to the first node is called circular linked list.
- The chain does not indicate first or last node.
- In this case, external pointer provides a frame of reference because last node of a circular linked list not contains the NULL value.

Example:

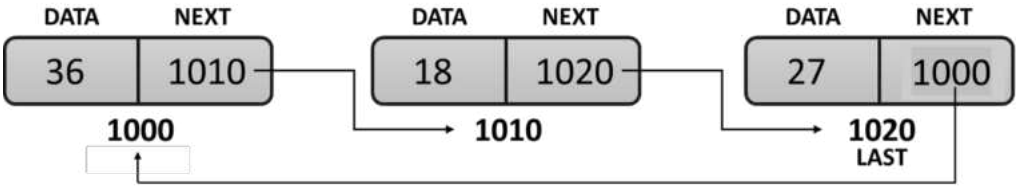

Advantages:

Circular linked lists have a number of advantages over traditional linked lists.

- First, because there is no defined beginning or end to the list, data can be added and removed from the list at any time. This makes circular linked lists ideal for applications where data needs to be constantly added or removed, such as in a real-time application.
- Second, because data is stored in a ring-like structure, it can be accessed in a continuous loop. This makes circular linked lists ideal for applications where data needs to be processed in a continuous loop, such as in a real-time application or simulation.
- Third, Circular linked lists are typically more efficient than traditional linked list. Traditional linked lists often require additional memory for pointers that point to the beginning and end of the list. Circular linked lists, on the other hand, only require a single pointer to be stored in memory.
- Finally, circular linked lists are often easier to implement than traditional linked lists. This is because traditional linked lists often require the use of additional data structures, such as stacks and queues, to keep track of the list's beginning and end. Circular linked lists, on the other hand, only require a singly linked list data structure.

Doubly Linked List:

- In Doubly linked list Item can be navigated forward and backward both sides.
- Doubly linked list holds the base address of the previous node as well as the base address of the next node.
- This type of argument in structure is called doubly linked list.
- Doubly linked list is also known as a two-way linked list.

Atmiya University Rajkot

- **Doubly linked list consists of three parts as following.**
  1. Pointer to previous node (pointer to predecessor)
  2. Information field
  3. Pointer to next node (pointer to successor)

- **Example:**

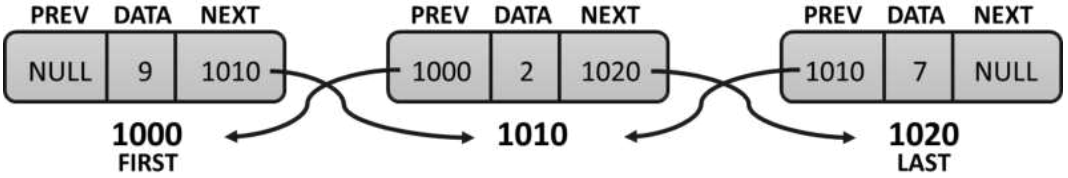

- The forward link is a pointer to the next node in the list, where as the backward link is a pointer to the preceding node.
- The backward link of left node and the forward link of right most nodes are both NULL, indicating the end of list for each direction.
- In singly linked list structure, traversing is possible only in one direction. Sometimes it is required to traverse the list in either direction forward or backward. This increases the performance and efficiency of algorithms.
- So, traversing of linked list in both the direction requires nodes having two pointers one pointing to left node and other pointing to the right node.

- **Advantages:**
- It provides two-way traversal, so it is best method of linked list.
- It provides faster search then singly linked list.

- **Disadvantages:**
- Insertion and deletion are little complex than singly linked list.

- **Structure representation in doubly linked list**

```
Struct Tag Name
{
    Data type1 Field_1;
    Data type2 Field_2;
    …
    …
    …
    Data type n Field_n;
    struct TagName *Prev;
    struct TagName *Next;
 };
```

Atmiya University Rajkot

Doubly Circular Linked List:

- In this Linked List, Last item contains link of the first element as next and the first element has contained a link to the last element as previous.
- A linked list in which last node points to the first node is called circular linked list.
- The chain does not indicate first or last node.
- In this case, external pointer provides a frame of reference because last node of a circular linked list not contains the NULL value.
- Doubly circular linked list can traverse in both directions.

Example:

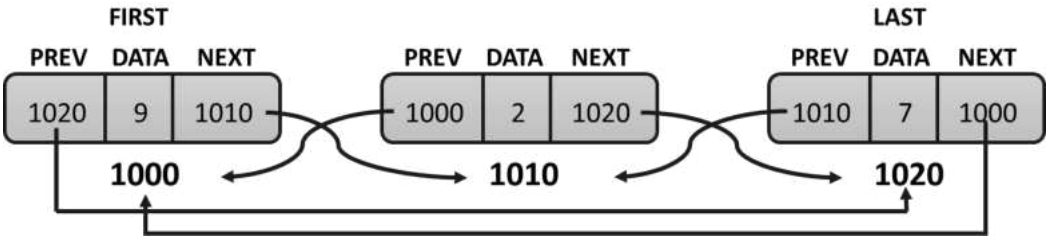

Advantage of Circular List over Singly link list:

- It is concerned with the accessibility of node.
- In circular list every node is accessible from given node.
- It concerns the deletion operation. In singly linked list to delete desired node, it is necessary to give the address of first node of the list.
- This necessity results from the fact that in order to delete desired node, the predecessor of this node has to be found.
- To find the predecessor required that a search could be carried out by changing through node from the first node of the list such requirement does not exist for circular list.

Disadvantage

- It is possible that without some care in processing, it is possible to get into an infinite loop.

Atmiya University Rajkot

➢ Basic Operations on linked list.

Following are the basic operations supported by a list.

- ✓ Insertion:
  Using Add function elements are inserted at the end of the List.
  The insertion into a singly linked list can be performed at different positions. Based on the position of the new node being inserted.
- ✓ Traverse (Display):
  In traversing, we simply visit each node of the list at least once in order to perform some specific operation on it, for example, printing data part of each node present in the list. Using traversing we can display the complete list.
- ✓ Update:
  To update the value of the node, we just need to set the data part to the new value. This operation set the new value at the position of specified old value.
- ✓ Search:
  Searches an element using the given key. In searching, we match each element of the list with the given element. If the element is found on any of the location, then location of that element is returned otherwise null is returned.
- ✓ Delete:
  The Deletion of a node from a singly linked list can be performed at different positions. Based on the position of the node being deleted. We can delete an element using the given key data by user.
- ✓ Count:
  The count function returns how many values are available in to the record list.
- ✓ Sorting:
  To sort the elements in specified order (ascending or descending) sort function is used in linked list.

Atmiya University Rajkot

Question Bank: (1 Mark Questions)

1) A linked list is a _____ type data structure. – **Linear**
2) Which keyword is used to provide some meaningful names for the data type? – **typedef**
3) Linked List can be defined as collection of objects known as _____. – **node**
4) Which operator is used to access the member variable of structure using pointer? – **Aero Operator**
5) The last node of simple linked list contains _____ in its next address field. – **NULL**
6) Which function is used to allocate memory for data? – **malloc**
7) Which function is released the memory space which are not required? – **free**
8) Which value contain last pointer, while all the data are deleted in circular linked list? - **NULL**
9) Which type of linked list is also known as one-way linked list. – **Singly Linked List**
10) A linked list in which last node points to the first node is called _____ linked list. – **Circular**
11) Which linked list is two-way traverse and no contain NULL value? – **Doubly Circular**
12) Which linked list can traverse in reverse order? – **Doubly Linked List**
13) Which option returns how many values are available in to the record list? – **Count**
14) To visit each node or record _____ is required in linked list. – **Traversing**
15) Which type of linked list required and used two NULL value in it? – **Doubly Linked List**

Atmiya University Rajkot

Question Bank: (7 Marks Questions)

1) What is Linked list?
   Ans. Definition
   Concept
   Linked List Representation
   Uses of Linked List

2) What is Linked List? Explain singly linked list.
   Ans. Definition of linked list
   Singly linked list
   Example
   Advantages
   Disadvantages

3) What is Singly Linked List? Explain basic operations of linked list.
   Ans. Definition of linked list
   Singly circular linked list
   Basic Operations on linked list.

4) What is Linked List? Explain doubly linked list.
   Ans. Definition of linked list
   Example
   Advantages
   Disadvantages

5) What is Linked List? Explain doubly circular linked list.
   Ans. Definition of linked list
   Example
   Advantages
   Disadvantages

6) Program for any operation of linked list.
   Ans. Add, Display, Delete, Update, Search, Sort, Count

Atmiya University Rajkot

Atmiya University Rajkot

UNIT-4

Tree

What is Tree?

Definition and concept

As we know, there are two types of data structures. Linear and non-linear. Tree falls under the title "non-linear data structure". Tree is one of the most commonly used data structures.

A tree is a hierarchical data structure defined as a collection of nodes. Nodes represent value and nodes are connected by edges.

Tree in C is the non-linear(hierarchical) data structure, that consists of nodes connected by edges.

A tree has the following properties:

- ✓ **Root:** The root node is the topmost node in the tree hierarchy. In other words, the root node is the one that doesn't have any parent. In the above structure, node numbered 1 is the root node of the tree. If a node is directly linked to some other node, it would be called a parent-child relationship.
- ✓ **Child node:** If the node is a descendant of any node, then the node is known as a child node. Nodes at next level are called children.
- ✓ **Parent:** If the node contains any sub-node, then that node is said to be the parent of that sub-node. Root of all nodes is called parent.
- ✓ **Sibling:** The nodes that have the same parent are known as siblings.
- ✓ **Leaf Node:** The node of the tree, which doesn't have any child node, is called a leaf node. A leaf node is the bottom-most node of the tree. There can be any number of leaf nodes present in a general tree. The leaf nodes are also called terminal nodes and rest of the nodes are called non-terminal. Leaf nodes can also be called external nodes. A leaf node has always zero degree.
- ✓ **Internal nodes:** A node has at least one child node known as an internal node.
- ✓ **Edge:** A tree can be defined as a collection of nodes and each node is connected with another node with the help of branch known as edge.
- ✓ **Degree:** Number of nodes connected with one node is called degree.
- ✓ **Sub-tree:** Tree may have sub–trees. Sub-tree is nothing but again nodes connected with another node which is in turn sub-node of some root node.

Atmiya University Rajkot

- ✓ **Level:** In a tree, each step from top to bottom is called as **level of a tree**. The level count starts with 0 and increments by 1 at each level or step.
- ✓ **Height:** It is the total number of edges from the node to the **deepest leaf**. The tree height is also considered the root height. The longest path from any leaf node to a particular node is called as **height of that node**. **Height of a tree** is the height of root node. Height of all Leaf nodes = 0.
- ✓ **Depth:** Total number of edges from a particular node to the root node is called as depth of that node. Depth of a tree is the total number of edges from root node to a leaf node in the longest path. Depth of the root node = 0
- ✓ **Forest:** A forest is a set of disjoint trees.

➢ **To understand the above terms, let's take one example:**

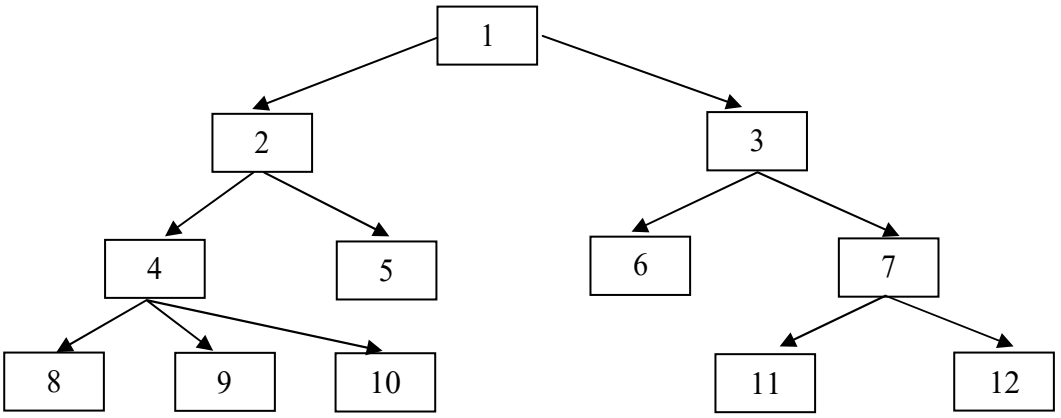

- ✓ Here, nodes 8,9,10,11,12 are leaf or terminal nodes, while others (1,2,3,4,5,6,7) are non- terminal nodes.
- ✓ 1 is the special node which is root node of the tree.
- ✓ 2 and 3 are root nodes of sub-trees.
- ✓ 4 is the parents of 8,9,10 and in turn 8,9,10 are children of node 4.
- ✓ Ancestors of 8 include 4, 2, and 1.

➢ **Types of trees:**

- Binary Tree
- Binary Search Tree
- AVL Tree
- Red & black tree
- Expression Tree
- B-Tree

Atmiya University Rajkot

Binary Tree:

- Here, binary name itself suggests two numbers, i.e., 0 and 1. In a binary tree, each node in a tree can have utmost two child nodes. Here, utmost means whether the node has 0 nodes, 1 node or 2 nodes.
- A binary tree is a hierarchical data structure in which each node has at most two children, referred to as the left child and the right child. It is a fundamental data structure used in computer science for various applications such as searching, sorting, and representing hierarchical relationships.
- **Example:**

Data is 8, 5, 2, 7, 3, 4

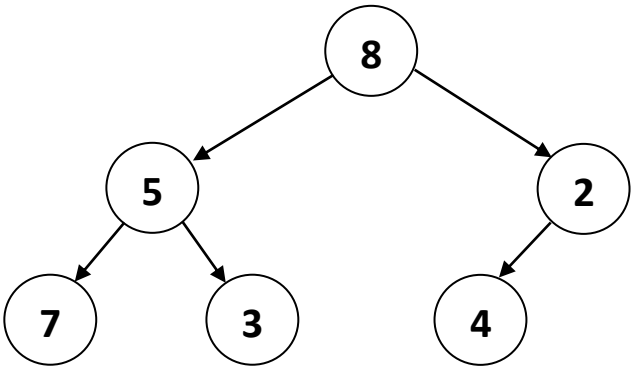

Binary Search Tree (BST):

- Binary tree is a special type of data structure. A binary tree has a special condition that each node can have a maximum of two children, which are known as Left child and Right Child.
- Binary search tree is a binary tree which has special property called BST.
- Where each node contains only smaller values in its left subtree and only larger values in its right subtree. This rule is applied recursively to the left and right subtrees of the root.

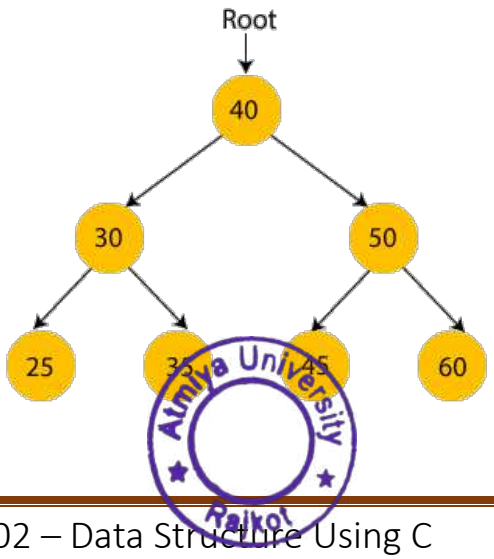

Atmiya University Rajkot

- In the above figure, we can observe that the root node is 40, and all the nodes of the left subtree are smaller than the root node, and all the nodes of the right subtree are greater than the root node.
- Similarly, we can see the left child of root node is greater than its left child and smaller than its right child. So, it also satisfies the property of binary search tree. Therefore, we can say that the tree in the above image is a binary search tree.

Operation on binary tree

There are operations on binary tree to placing, locating and traversing the records in a database, especially when all the data is known to be in random access memory (RAM).

Create:

- ✓ Insert operation starts from the root node. It is used whenever an element is to be inserted.
- ✓ A new key in BST is always inserted at the leaf. To insert an element in BST, we have to start searching from the root node; if the node to be inserted is less than the root node, then search for an empty location in the left subtree. Else, search for the empty location in the right subtree and insert the data.
- ✓ Insert in BST is similar to searching, as we always have to maintain the rule that the left subtree is smaller than the root, and right subtree is larger than the root.

Traverse

- ✓ Traversal is a process to visit all the nodes of a tree and may print their values too. Because, all nodes are connected via edges (links) we always start from the root (head) node. That is, we cannot randomly access a node in a tree. There are three ways which we use to traverse a tree –
- ✓ There are three techniques of traversal:

1) Inorder Traversal
2) Preorder Traversal
3) Postorder Traversal

Atmiya University Rajkot

1) Inorder Traversal

An inorder traversal technique follows the "**Left-Root-Right**" policy. Here, Left Root Right means that the left subtree of the root node is traversed first, then the root node, and then the right subtree of the root node is traversed.

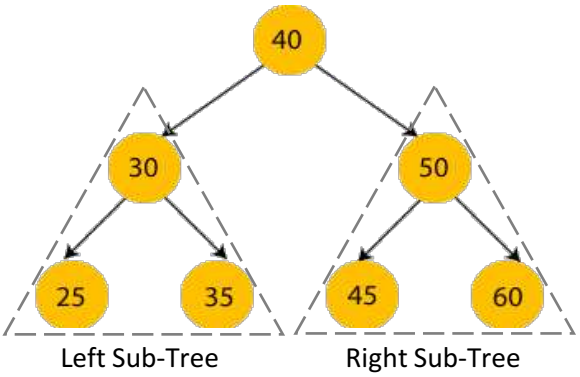

We start from root-40, and following in-order traversal, we move to its left subtree 30. 30 is also traversed in-order, so we move again left side of 30. If found NULL node at left then access that node The process goes on until all the nodes are visited.

The output of in-order traversal of this tree will be –

25 → 30 → 35 → 40 → 45 → 50 → 60

2) Preorder Traversal

In pre-order traversal method, the root node is visited first, then the left subtree and finally the right subtree.

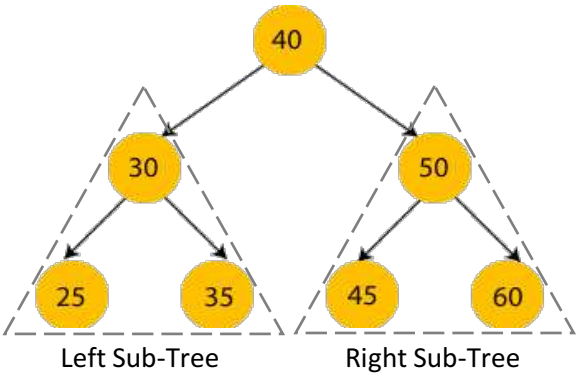

We start from root-40, and following pre-order traversal, we first access 40 itself and then move to its left subtree 30. 30 is also traversed pre-order, so access that node and move ahead. The process goes on until all the nodes are visited.

The output of pre-order traversal of this tree will be –

40 → 30 → 25 → 35 → 50 → 45 → 60

Atmiya University Rajkot

3) Postorder Traversal

In post-order traversal method, the root node is visited last, hence the name. First, we traverse the left subtree, then the right subtree and finally the root node.

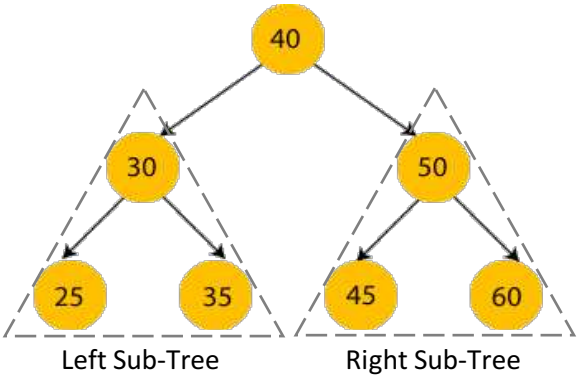

We start from root-40, and following post-order traversal, we first visit the left subtree 30. 30 is also traversed post-order. The process goes on until all the nodes are visited.

The output of post-order traversal of this tree will be –

25 → 35 → 30 → 45 → 60 → 50 → 40

- Advantages of Binary Search Tree:
  - ✓ Searching an element in the Binary search tree is easy as we always have a hint that which subtree has the desired element.
  - ✓ As compared to array and linked lists, insertion and deletion operations are faster in BST.

AVL tree:

- ✓ It is one of the types of the binary tree, or we can say that it is a variant of the binary search tree. AVL tree satisfies the property of the *binary tree* as well as of the *binary search tree*. It is a self-balancing binary search tree that was invented by **Adelson-Velsky and Landis**. Here, self-balancing means that balancing the heights of left subtree and right subtree. This balancing is measured in terms of the *balancing factor*.

- ✓ We can consider a tree as an AVL tree if the tree obeys the binary search tree as well as a balancing factor. The balancing factor can be defined as the *difference between the height of the left subtree and the height of the right subtree*. Therefore, each node in the AVL tree should have the value of the balancing factor either as 0, -1, or 1.

Atmiya University Rajkot

- ✓ Here we see that the first tree is balanced and the next two trees are not balanced –

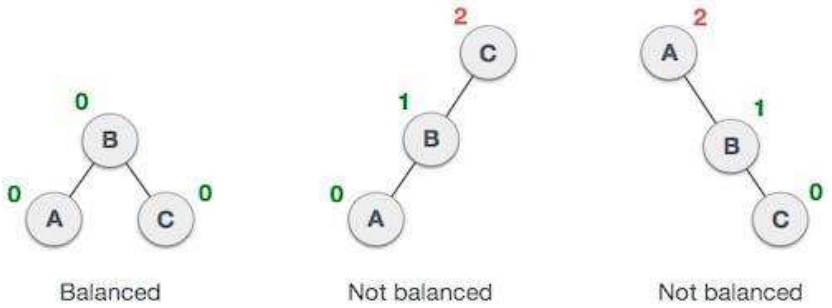

- ✓ In the second tree, the left subtree of C has height 2 and the right subtree has height 0, so the difference is 2. In the third tree, the right subtree of A has height 2 and the left is missing, so it is 0, and the difference is 2 again. AVL tree permits difference (balance factor) to be only 1.

Balance Factor = height(left-sutree) – height(right-sutree)

AVL Rotations

- ✓ To balance itself, an AVL tree may perform the following four kinds of rotations –
  1) Left rotation
  2) Right rotation
  3) Left-Right rotation
  4) Right-Left rotation

- ✓ The first two rotations are single rotations and the next two rotations are double rotations. To have an unbalanced tree, we at least need a tree of height 2. With this simple tree, let's understand them one by one.

1) Left Rotation:

- ✓ If a tree becomes unbalanced, when a node is inserted into the right subtree of the right subtree, then we perform a single left rotation –

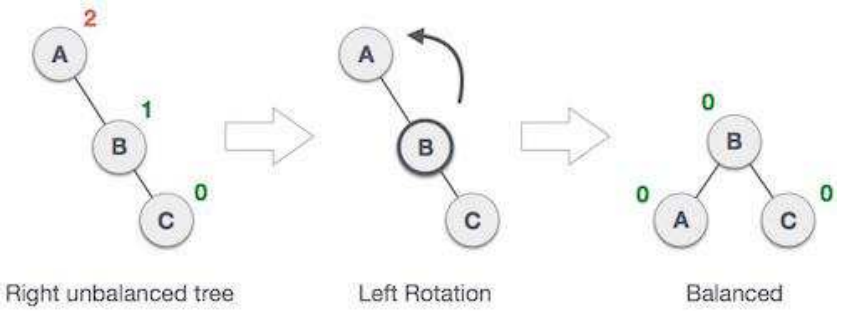

- ✓ In our example, node A has become unbalanced as a node is inserted in the right subtree of A's right subtree. We perform the left rotation by making A the left-subtree of B.

Aditya University Rajkot

2) **Right Rotation:**

- ✓ AVL tree may become unbalanced, if a node is inserted in the left subtree of the left subtree. The tree then needs a right rotation.

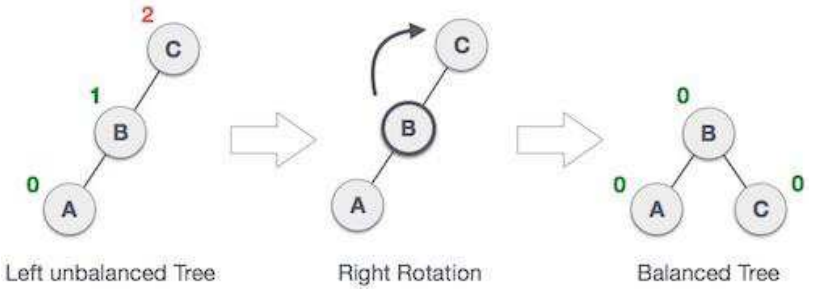

- ✓ As depicted, the unbalanced node becomes the right child of its left child by performing a right rotation.

3) **Left-Right Rotation:**

- ✓ Double rotations are slightly complex version of already explained versions of rotations. To understand them better, we should take note of each action performed while rotation. Let's first check how to perform Left-Right rotation. A left-right rotation is a combination of left rotation followed by right rotation.

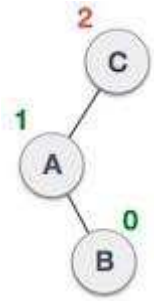

A node has been inserted into the right subtree of the left subtree. This makes **C** an unbalanced node. These scenarios cause AVL tree to perform left-right rotation.

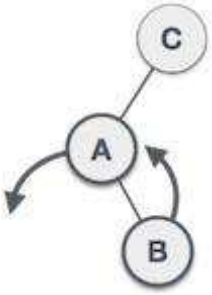

We first perform the left rotation on the left subtree of C. This makes A, the left subtree of B.

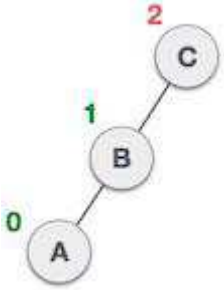

Node C is still unbalanced, however now, it is because of the left-subtree of the left-subtree.

Atmiya University Rajkot

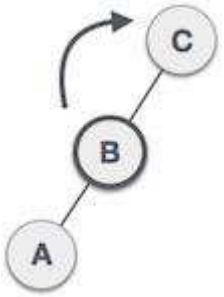

We shall now right-rotate the tree, making B the new root node of this subtree. C now becomes the right subtree of its own left subtree.

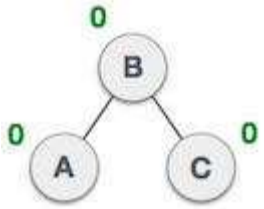

The tree is now balanced.

4) Right-Left Rotation:

- ✓ The second type of double rotation is Right-Left Rotation. It is a combination of right rotation followed by left rotation.

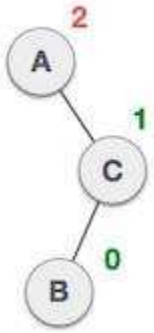

A node has been inserted into the left subtree of the right subtree. This makes A, an unbalanced node with balance factor 2.

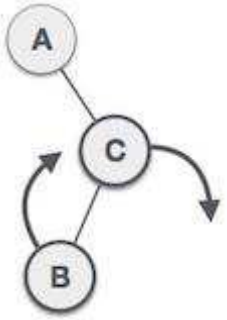

First, we perform the right rotation along C node, making C the right subtree of its own left subtree B. Now, B becomes the right subtree of A.

Atmiya University Rajkot

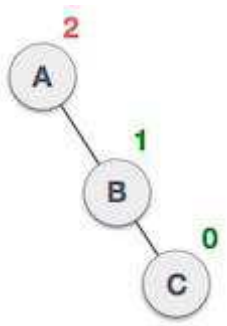

Node A is still unbalanced because of the right subtree of its right subtree and requires a left rotation.

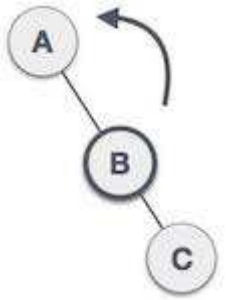

A left rotation is performed by making B the new root node of the subtree. A becomes the left subtree of its right subtree B.

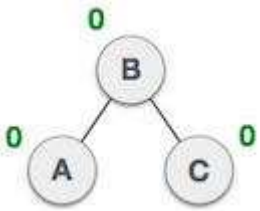

The tree is now balanced.

Red and Black tree

- ✓ The red-Black tree is a binary search tree. The prerequisite of the red-black tree is that we should know about the binary search tree. In a binary search tree, the values of the nodes in the left subtree should be less than the value of the root node, and the values of the nodes in the right subtree should be greater than the value of the root node.
- ✓ Each node in the Red-black tree contains an extra bit that represents a color to ensure that the tree is balanced during any operations performed on the tree like insertion, deletion, etc.

Properties of Red-Black tree

- ✓ It is a self-balancing Binary Search tree. Here, self-balancing means that it balances the tree itself by either doing the rotations or recoloring the nodes.
- ✓ This tree data structure is named as a Red-Black tree as each node is either Red or Black in color. Every node store one extra information known as a bit that represents the color of the node. For example, 0 bit denotes the black color while 1 bit denotes the red color of the node. Other information stored by the node is similar to the binary tree, i.e., data part, left pointer and right pointer.

Atmiya University Rajkot

- ✓ In the Red-Black tree, the root node is always black in color.
- ✓ In a binary tree, we consider those nodes as the leaf which have no child. In contrast, in the Red-Black tree, the nodes that have no child are considered the internal nodes and these nodes are connected to the NIL nodes that are always black in color. The NIL nodes are the leaf nodes in the Red-Black tree.
- ✓ If the node is Red, then its children should be in Black color. In other words, we can say that there should be no red-red parent-child relationship.
- ✓ Every path from a node to any of its descendant's NIL node should have same number of black nodes.

✯ However, we should know that a red-black tree is balanced when it follows the conditions –

- ✓ Every Root Node must be Black.
- ✓ Every node is either Red or Black.
- ✓ If the tree is not empty, then a new node should be a red color.
- ✓ There are no two adjacent red nodes (A red node cannot have a red parent or red child). If a node is red, then its children must be black.
- ✓ The path from the root till the end must contain an equal number of black nodes.

➢ **Structure representation in TREE:**

- ✓ We use a double linked list to represent a binary tree. In a double linked list, every node consists of three fields. First field for storing left child address, second for storing actual data and third for storing right child address. In this tree representation, a node has the following structure...

- ✓ In this tree representation every node is stored separately and keeps the address of other nodes as follows:

Left Child Address	DATA	Right Child Address

---------- Node ----------

- ✓ **Example:**

```
Struct tree
{
    struct tree left;
    int data;
    struct tree right;
};
```

Atmiya University Rajkot

Question Bank: (1 Mark Questions)

1) Which type of data structure is Tree? – **Non-Linear/Hierarchical**
2) Which node doesn't have any parent? – **Root**
3) The connecting link between any two nodes is known as an _____. – **edge**.
4) How many edges are used for n number of nodes in a tree? – **n-1**
5) The nodes that have the same parent are known as _____. – **siblings**
6) All terminal nodes are known as _____ node. – **Leaf**
7) How many degree(s) is/are available of leaf node? – **Zero**
8) Leaf nodes are known as _____. – **External/Terminal nodes**
9) A node has at least one child node known as _____. – **an Internal node**
10) Number of nodes connected with one node is called _____. – **degree.**
11) Total number of edges from the node to the deepest leaf is known as _____ of that node. – **Height**
12) Total number of edges from a particular node to the root node is called as _____ of that node. – **Depth**
13) What is a process to visit all the nodes of a tree and may access values too? – **Traversal**
14) How many types of traversal techniques are available in a tree? – **Three**
15) In which traversal method, the root node is visited first? – **pre-order**
16) In which traversal method, the root node is visited last? – **post-order**
17) Stand by: AVL – **Adelson-Velsky and Landis**
18) Which tree obeys the binary search tree as well as a balancing factor? – **AVL Tree**
19) The balancing factor's value must be _____. – **0, -1, 1**
20) How many types of rotations are used in AVL tree? – **Four**
21) Which tree contains an extra bit that represents a color? – **Red-black**
22) In the Red-Black tree, the root node is always _____ in color. – **black**
23) Which nodes have always zero height? – **Leaf**
24) Which nodes has always zero depth? – **Root**

Atmiya University Rajkot

Question Bank: (7 Marks Questions)

1) What is a Tree? Explain its properties (important terms).
   Ans. Definition and concept
   Different properties

2) What is a Tree? Explain types of trees.
   Ans. Definition and concept
   Different Types (Binary, BST, AVL, Red & Black)

3) What is BST? Explain traverse with an example.
   Ans. About Binary Search Tree
   Advantages of Binary Search Tree
   Three types of traverses (in-order, Pre-order, Post-order)

4) What is AVL Tree? Explain its balance factor. ***Or*** Explain different rotations.
   Ans. Concept of AVL tree
   Different rotations

5) What is Tree? Explain Red and Black tree.
   Ans. Definition of tree
   Concept of Red & Black tree
   Properties of red-black tree.

6) Create a Binary Search Tree from given series and write in-order traverser.
   Ans. BST Structure

7) Create a AVL Tree from given series and write down the values of second level.
   Ans. AVL Tree Structure

Atmiya University Rajkot

Atmiya University Rajkot

UNIT-5

Graph

Basic Introduction

A graph is a pictorial representation of a set of objects where some pairs of objects are connected by links. The interconnected objects are represented by points termed as vertices, and the links that connect the vertices are called edges.

Formally, a graph is a pair of sets (V, E), where V is the set of vertices and E is the set of edges, connecting the pairs of vertices.

There is the example of graph…

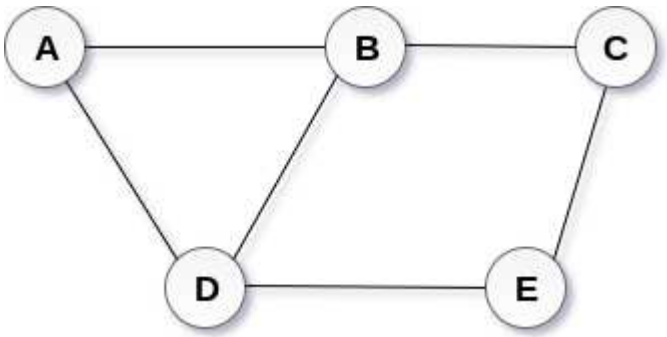

In other word, a graph can be defined as group of vertices and edges that are used to connect these vertices. A graph can be seen as a cyclic tree, where the vertices (Nodes) maintain any complex relationship among them instead of having parent child relationship.

In the above graph,

V = {A, B, C, D, E}

E = {AB, AD, BC, BD, CE, DE}

Atmiya University Rajkot

✡ Applications of Graphs:

Since they are powerful abstractions, graphs can be very important in modeling data. In fact, many problems can be reduced to known graph problems. Here we outline just some of the many applications of graphs.

Graphs are considered an outstanding modelling tool used to model several stages of relationships between all physical conditions. Several real-world problems can be represented with graphs. Here are some important graph applications:

- ✓ **Information Graphs:** Geographical information is structured according to a graph, and information A is linked to information B, when A stands for B in a certain way.

  Graphs can be used to model transportation systems, such as roads and flights, and to find the shortest or quickest routes between locations.

- ✓ **Social Networks:** Graphs are special network conditions, with only one type of edge between vertices.

  Users on Facebook are referred to as vertices, and if they are friends, there is an edge connecting them. The Friend Suggestion system on Facebook is based on graph theory.

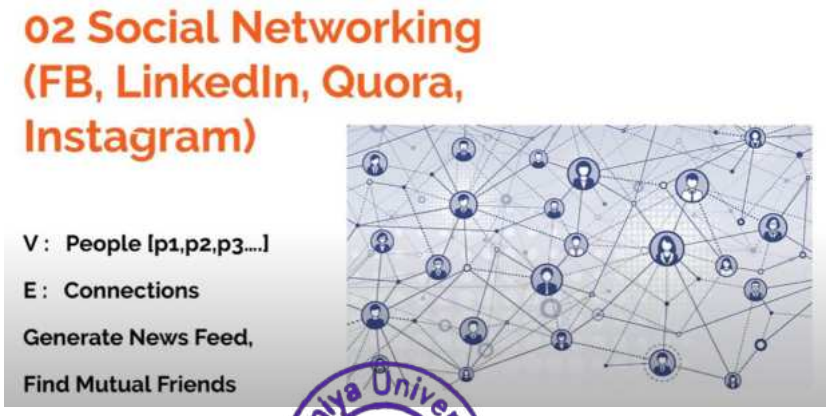

Atmiya University Rajkot

- ✓ **Circuit Design:** Graphs are used in the design of electronic circuits, such as logic circuits and circuit diagrams.

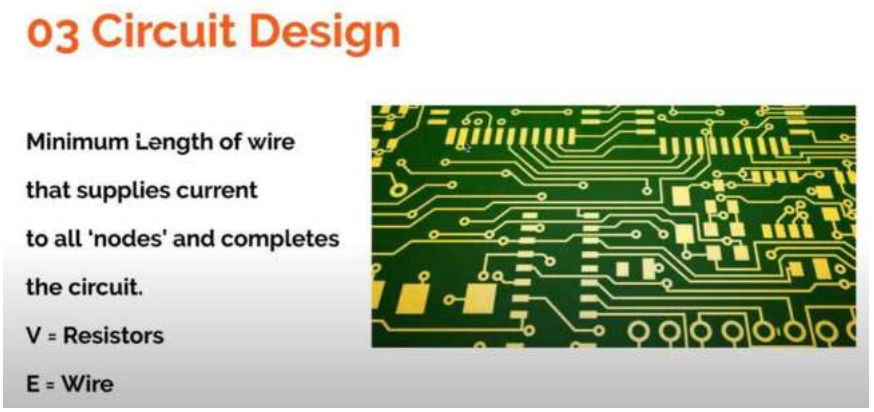

- ✓ **Web Graphs:** The web is an extensive collection of references to hyperlinks. In other words, the web is another excellent set of graph data.

  Web pages are referred to as vertices on the World Wide Web. Suppose there is a link from page A to page B that can represent an edge. This application is an illustration of a directed graph.

- ✓ **Biological Networks:** Space (or biological networks) is one of the significant sources of real-world graphs. Examples are brain networks, protein communication networks, and diet networks.

- ✓ **Telecommunication:** Graphs are used to model telecommunication networks, such as telephone and computer networks, and to analyze traffic and routing.

Types of Graphs:

Simple Graph:

A graph having no self-loops and no parallel edges in it is called as a simple graph.

A simple graph which has n vertices, the degree of every vertex is at most n -1.

This graph consists of three vertices and three edges. There are neither self-loops nor parallel edges. Therefore, it is a simple graph.

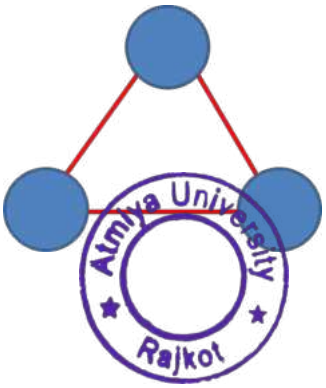

- Multi Graph:

A graph having no self-loops but having parallel edge(s) in it is called as a multi graph.

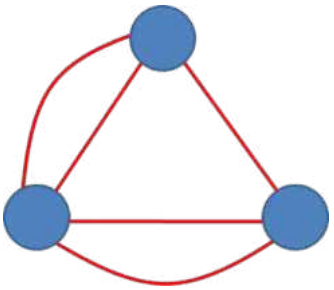

This graph consists of three vertices and four edges out of which two edges are parallel edges. There are no self-loops but a parallel edge is present. Therefore, it is a multi-graph.

- Null Graph:

A graph having no edges is called a Null Graph. In other words, a null graph does not contain any single edge in it.

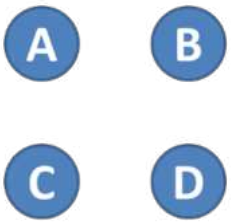

In the above graph, there are four vertices named 'A', 'B', 'C' and 'D', but there are no edges among them. Hence it is a Null Graph.

- Complete Graph:

A graph in which exactly one edge is present between every pair of vertices is called as a complete graph.

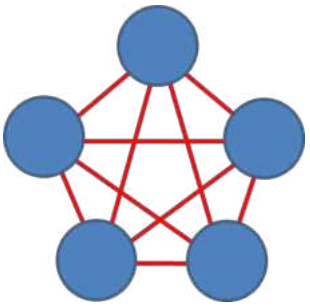

- Regular Graph:

A **Regular graph** is a graph in which degree of all the vertices is same.

In these graphs,

- All the vertices have 2 degrees.
- Therefore, they are 2-Regular graphs.

✡ Bipartite Graph:

A **bipartite graph** is a graph in which the vertex set can be partitioned into two sets such that edges only go between sets, not within them.

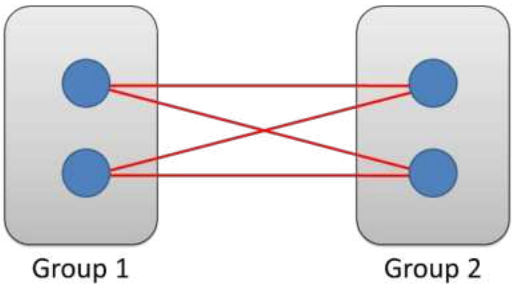

✡ Weighted Graph:

A weighted graph is a graph whose edges have been labeled with some weights or numbers. The length of a path in a weighted graph is the sum of the weights of all the edges in the path.

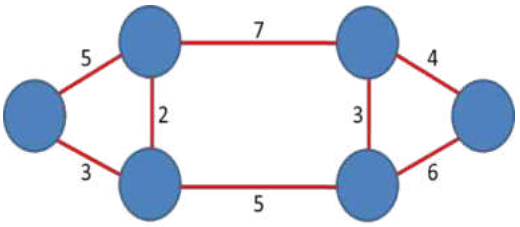

✡ Digraph (Directed Graph):

A graph in which all the edges are directed is called as a directed graph. In other words, all the edges of a directed graph contain some direction. Directed graphs are also called as digraphs.

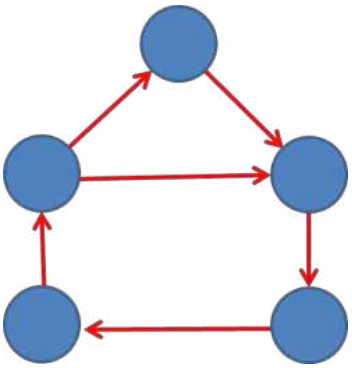

✡ Undirected Graph

A graph in which all the edges have no direction is called as a non-directed or undirected graph.

Atmiya University Rajkot

In other words, edges of an undirected graph do not contain any direction.

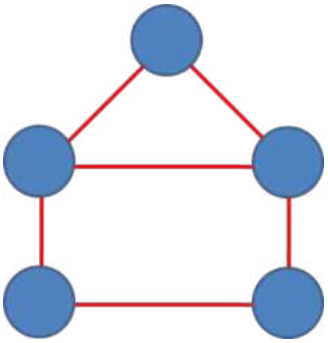

In above graph,

- This graph consists of five vertices and six undirected edges.
- Since all the edges are undirected, therefore it is a non-directed graph.

✡ Connected Graph:

A graph in which we can visit from any one vertex to any other vertex is called as a connected graph. In connected graph, at least one path exists between every pair of vertices. So that we can say that it is connected to some other vertex at the other side of the edge.

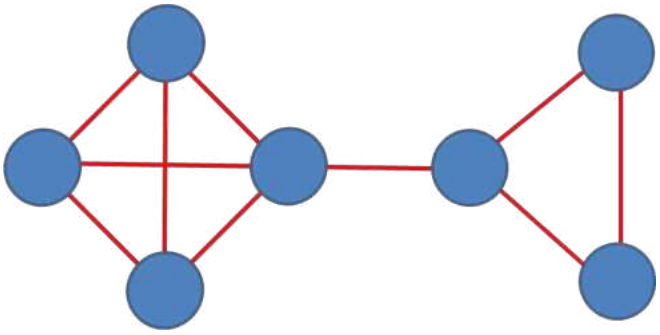

✡ Disconnected Graph:

A graph in which there does not exist any path between at least one pair of vertices is called as a disconnected graph.

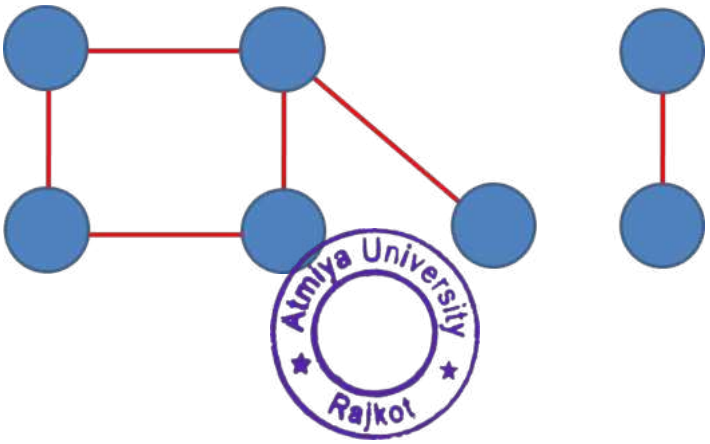

Atmiya University Rajkot

✡ Cyclic Graph:

A graph containing at least one cycle in it is known as a **cyclic graph**.

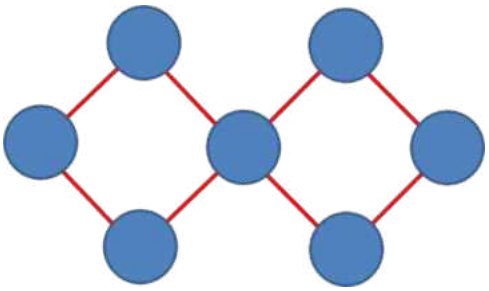

✡ Directed Acyclic Graph:

A graph refers to a set of vertices which are connected by lines called edges. In a directed graph or a digraph, each edge is associated with a direction from a start vertex to an end vertex. "Directed" means that each edge has a defined direction, so each edge necessarily represents a single directional flow from one vertex to another. "Acyclic" means that there are no loops (i.e., "cycles") in the graph.

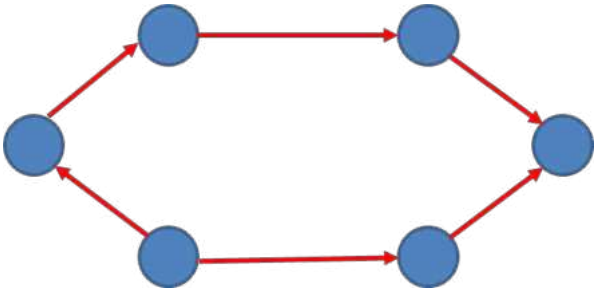

Graph Representations:

In graph theory, a graph representation is a technique to store graph into the memory of computer. Graph data structure is represented using following representations...

- Adjacency Matrix
- Adjacency List

Adjacency Matrix

In this representation, the graph is represented using a matrix of size total number of vertices by a total number of vertices. That means a graph with 4 vertices is represented using a matrix of size 4X4. In this matrix, both rows and columns represent vertices. This matrix is filled with either 1 or 0. Here, 1 represents that there is an edge from row vertex to column vertex and 0 represents that there is no edge from row vertex to column vertex.

Atmiya University Rajkot

For example, consider the following undirected graph representation...

	A	B	C	D	E
A	0	1	0	0	1
B	1	0	1	0	1
C	0	1	0	1	1
D	0	0	1	0	1
E	1	1	1	1	0

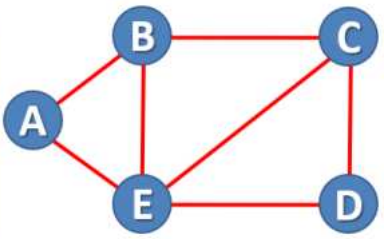

- Adjacency List

This is another type of graph representation. It is called the adjacency list. This representation is based on Linked Lists. In this approach, each Node is holding a list of Nodes, which are Directly connected with those vertices. At the end of list, each node is connected with the null values to tell that it is the end node of that list.

A ➡ B E
B ➡ A C E
C ➡ B D E
D ➡ C E
E ➡ A B C D

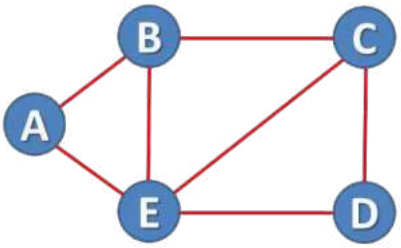

In this representation, every vertex of a graph contains list of its adjacent vertices.

Graph Traversal:

The graph is one non-linear data structure. That is consists of some nodes and their connected edges. The edges may be director or undirected. This graph can be represented as G(V, E).

Graph traversal is a technique used to search for a vertex in a graph. It is also used to decide the order of vertices to be visited in the search process. A graph traversal finds the edges to be used in the search process without creating loops.

The graph has two types of traversal algorithms. These are called…

- Breadth First Search
- Depth First Search

- **Breadth First Search:**

The Breadth First Search (BFS) traversal is an algorithm, which is used to visit all of the nodes of a given graph. In this traversal algorithm one node is selected and then all of the adjacent nodes are visited one by one. After completing all of the adjacent vertices, it moves further to check another vertex and checks its adjacent vertices again.

Atmiya University Rajkot

Ex.:

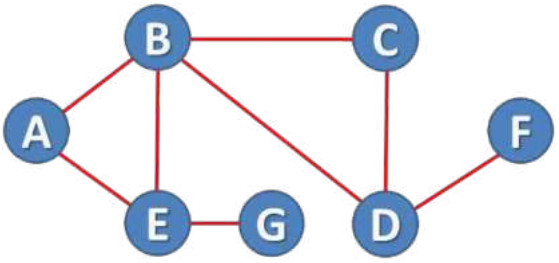

Output: A, B, E, C, D, G, F

- **Depth First Search:**

The Depth First Search (DFS) is a graph traversal algorithm. In this algorithm one starting vertex is given, and when an adjacent vertex is found, it moves to that adjacent vertex first and try to traverse in the same manner.

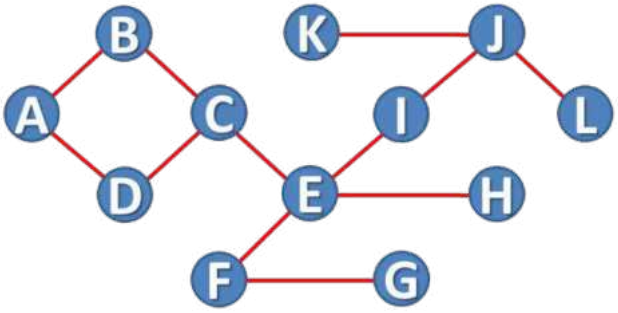

Output: A, D, C, E, F, G I, J, K, L, H, B

Shortest Path Algorithms:

- Kruskal algorithm
- Dijkstra's shortest path algorithm

- **Kruskal algorithm:**

Kruskal's Algorithm is used to find the minimum spanning tree for a connected weighted graph. The main target of the algorithm is to find the subset of edges by using which we can traverse every vertex of the graph.

Kruskal's algorithm to find the minimum cost spanning tree uses the greedy approach. This algorithm treats the graph as a forest and every node it has as an individual tree.

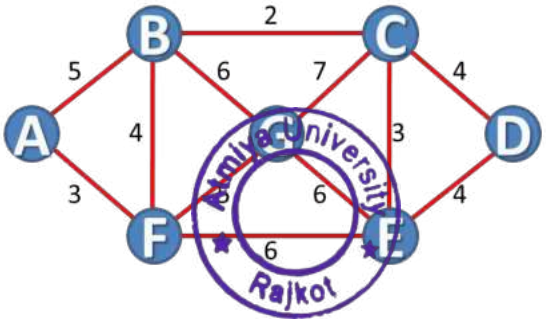

How does Kruskal's algorithm work?

In Kruskal's algorithm, we start from edges with the lowest weight and keep adding the edges until the goal is reached. The steps to implement Kruskal's algorithm are listed as follows -

- ✓ First, sort all the edges from low weight to high.
- ✓ Now, take the edge with the lowest weight and add it to the spanning tree. If the edge to be added creates a cycle, then reject the edge.
- ✓ Continue to add the edges until we reach all vertices, and a minimum spanning tree is created.

The applications of Kruskal's algorithm are -

- ✓ Kruskal's algorithm can be used to layout electrical wiring among cities.
- ✓ It can be used to lay down LAN connections.

Dijkstra's shortest path algorithm:

The Dijkstra's algorithm finds the shortest path from a particular node, called the source node to every other node in a connected graph. It produces a shortest path tree with the source node as the root. It is profoundly used in computer networks to generate optimal routes with the aim of minimizing routing costs.

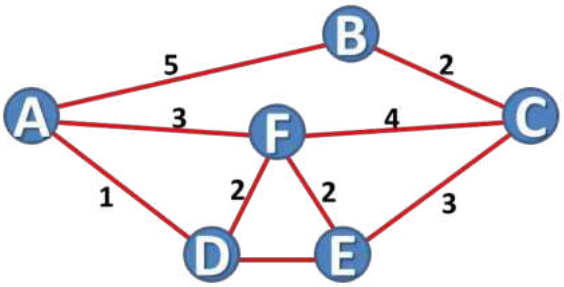

First, we have to consider any vertex as a source vertex. Suppose we consider vertex 'A' as a source vertex.

Here we assume that 'A' as a source vertex, and distance to all the other vertices is infinity. Initially, we do not know the distances. First, we will find out the vertices which are directly connected to the vertex 'A'. As we can observe in the above graph that three vertices are directly connected to vertex 'A'.

Minimum Spanning Tree

In a weighted graph, a minimum spanning tree is a spanning tree that has minimum sum of weight than all other spanning trees of the same graph. In real-world situations, this weight can be measured as distance, congestion, traffic load or any arbitrary value denoted to the edges.

Atmiya University Rajkot

Question Bank: (1 Mark Questions)

1) Which graph has no self-loops and no parallel edges? – **Simple Graph**
2) Which graph has no self-loops but having parallel edges? – **Multi graph**
3) Which graph does not contain any single edge in it? – **Null Graph**
4) Which graph is labeled with some weights or numbers? – **Weighted Graph**
5) Which graph containing at least one cycle in it? – **Cyclic Graph**
6) Which graph is never connected with same group or set but connect with another group or set? – **Bipartite Graph**
7) Users on Facebook are referred to as _____ in graph application. – **Vertices**
8) _____ are the edges of google map graph application. – **Road or Flights**
9) In google map graph application cities or landmark is known as _____. – **Vertices**
10) Which value is represented while row and column vertices are connected with each other? – **1**
11) BFS stands for _____. – **Breadth First Search**
12) DFS stands for _____. – **Depth First Search**
13) Which graph representation is based on Linked List? – **Adjacency List**
14) _____ finds the edges to be used in the search process without creating loops. – **Graph traversal**
15) A _____ graph is required to find out a minimum spanning tree. – **Weighted**

Atmiya University Rajkot

Question Bank: (7 Marks Questions)

1) What is graph? Explain the different types of graphs.
   Ans. Graph Introduction
   Types of Graphs

2) What is graph? Explain the graph application.
   Ans. Graph Introduction
   Different graph application

3) What is Graph? Explain Graph representations.
   Ans. Graph Introduction
   Adjacency Matrix
   Adjacency List

4) What is Graph traversal. Explain Breadth First Search.
   Ans. Introduction of Graph traversal
   Breadth First Search
   Example

5) What is Graph traversal. Explain Depth First Search.
   Ans. Introduction of Graph traversal
   Depth First Search
   Example

6) Explain Kruskal algorithm. How does Kruskal's algorithm work?
   Ans. Kruskal algorithm
   How it works.

7) Explain Dijkstra's shortest path algorithm. Explain Minimum Spanning tree with an example.
   Ans. Dijkstra's shortest path algorithm
   Minimum spanning tree
   Example

8) What is graph representation? Create the Adjacency Matrix and Adjacency List from following graph.

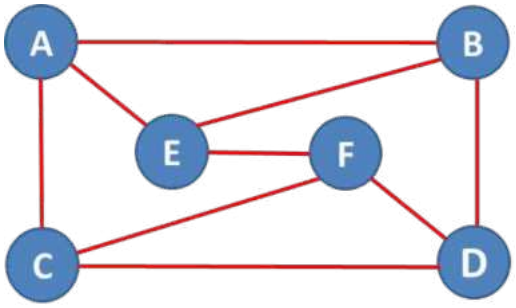

   Ans. About graph representation
   Adjacency Matric
   Adjacency List

Atmiya University Rajkot

~ P-A-P-E-R S-T-Y-L-E ~

Enrolment No. _____

ATMIYA UNIVERSITY
SEMESTER END EXAMINATION SUMMER – 202_
Faculty of Science
BCA/ B.Sc. Information Technology
23UGCA202/23UGCS202 – Core 4: Data Structure using C

Duration of Exam – 3 hrs ***Semester – II*** ***Max. Marks – 70***

Part A (10X1= 10 marks)
Answer **ALL** questions

1. xxxxx xxxx xxxxx xxxx xxxxx xxxx xxxxx xxxx

↓

10. xxxxx xxxx xxxxx xxxx xxxxx xxxx xxxxx xxxx

Part B (5X5= 25 marks)
Answer **ALL** questions

11a. xxxxx xxxx xxxxx xxxx xxxxx xxxx xxxxx xxxx
OR
11b. xxxxx xxxx xxxxx xxxx xxxxx xxxx xxxxx xxxx

↓

15a. xxxxx xxxx xxxxx xxxx xxxxx xxxx xxxxx xxxx
OR
15b. xxxxx xxxx xxxxx xxxx xxxxx xxxx xxxxx xxxx

Part C (5X7= 35 marks)
Answer **ALL** questions

16a. xxxxx xxxx xxxxx xxxx xxxxx xxxx xxxxx xxxx
OR
16b. xxxxx xxxx xxxxx xxxx xxxxx xxxx xxxxx xxxx

↓

20a. xxxxx xxxx xxxxx xxxx xxxxx xxxx xxxxx xxxx
OR
20b. xxxxx xxxx xxxxx xxxx xxxxx xxxx xxxxx xxxx

Atmiya University Rajkot

Enrolment No. _____

ATMIYA UNIVERSITY

SEMESTER END EXAMINATION SUMMER – 202_

Faculty of Science

BCA/ B.Sc. Information Technology

23UGCA202/23UGCS202 – Core 4: Data Structure using C

Duration of Exam – 3 hrs ***Semester – II*** ***Max. Marks – 70***

Part A (10 Questions X 1 Mark = 10 Marks)

Answer **ALL** questions

1. Which sort works similar to the sorting of playing cards in hands.
2. Which searching technique is dividing the list into two parts?
3. Insertion of elements to the queue is known as _____.
4. Which data type that can hold either a True or a False value?
5. Which linked list has no NULL link?
6. Which function is used for memory allocation in C?
7. Which nodes are also called as non-terminal nodes?
8. What is pre-order traverse output of - 1, 2, 3, 4, 5, 6.
9. BFS stands for _____.
10. Which graph is never connected with same group but connect with another group set?

Part B (5 Questions X 5 Marks = 25 Marks)

Answer **ALL** questions

11a. Write a program of linear search.

OR

11b. Write a program binary search.

12a. What is Data Structure? Explain Linear & Non-linear Data Structure.

OR

12b. Explain Queue and its operations.

13a. Explain Singly Linked List with update operation.

OR

13b. Explain Circular Singly Linked List with display operation.

14a. What is Tree? Explain Binary tree component.

OR

14b. Explain AVL tree with Rotation techniques.

Atmiya University Rajkot

15a. What is Graph? Explain types of Graphs.

OR

15b. Explain Graph Representation with an example.

Part C (5 Questions X 7 Marks = 35 Marks)

Answer **ALL** questions

16a. Write a program of insertion sort.

OR

16b. Write a program of bubble sort.

17a. Explain Stack with an example.

OR

17b. Explain Circular Queue. Explain the advantages of Circular Queue.

18a. Explain Circular Singly Linked List with delete algorithm.

OR

18b. Explain Doubly Linked List with display & update algorithm.

19a. Explain tree terminology.

OR

19b. Explain Binary Search Tree with its traverse techniques.

20a. Explain Kruskal algorithm with minimum spanning tree.

OR

20b. Explain Dijkstra's shortest path algorithm with an example.

Atmiya University Rajkot

ATMIYA University, Rajkot
Faculty of Science
Department of Computer Application

B.C.A. / B.SC. I.T

21BCACL502 / 21BITCL502

MVC design Pattern with PHP (AP)

Atmiya University Rajkot

2

Object-oriented Programming with PHP

This chapter introduces the readers to the basic features of object-oriented programming with PHP and then provides an overview of the common design patterns. Later, we will go over how error handling and exception handling are performed in PHP. PHP has traditionally not been an **object-oriented programming** (**OOP**) language until PHP 5 when the language was revamped for a great deal to support the OOP features.

PHP in programming

PHP is a scripting language that is often used to build dynamic web applications. PHP inherits its programming style from C and Java. PHP comes with powerful libraries and strong community support, making it one of the favorite languages that developers use for building web applications. We will be utilizing the PHP libraries that were installed in *Bonus chapter 1*, *Installation of PHP, MariaDB, and Apache* to execute our scripts. Let us look at the three ways in which PHP scripts can be executed:

- Via the PHP shell
- Via the command line
- Using a web server such as Apache

The PHP shell is commonly used as a playground to test small scripts, and the shell can get tedious when working with bigger scripts. Executing files via command line is the second option where the PHP scripts will live inside the files. As we will be using object-oriented design to build our scripts, we will skip the first method and use the second and third methods to execute our scripts.

Atmiya University Rajkot

Object-oriented programming

Object-oriented programming is a popular programming paradigm where concepts are grouped into reusable objects that carry their own attributes and behaviors. An attribute can be described as a variable that is in the object, which is used to hold data pertaining to that object, while a behavior describes what an object can do. Let us consider the example of a `User` object; a user will have a name, an age, and an address, and these will be the attributes for a user. As the `User` object stores the address, we could have a behavior to allow and facilitate address retrieval; the behaviors are referred to as class methods. An object is a complex data structure that can have one or more types of attributes and one or more types of behaviors. The attributes and behaviors are defined in a class, and an object is an instance of a class. Therefore, the instances carry the same attributes and behaviors of that class. Though there could be multiple objects of the same class, the data stored in each object would be stored in different memory locations.

OOP is not a new concept and has been around for a very long period. OOP allows us to group our code based on behaviors and attributes and also allows us to organize our code for better reusability. Basic object-oriented features such as objects and classes were introduced into PHP 3 in 1998. In 2000, PHP 4 was released with a better support for object-oriented features but the implementation of objects was still an issue, as the object referencing was handled similar to value types. So a whole object would be copied when an object had to be passed in as a parameter to a function. As the object had to be copied, recreated, and stored several times, this led to poor scalability for big applications, extra usage of memory, and unnecessary overhead on the resources. PHP 5, which was shipped in 2004, arrived with a far superior object model that was better at handling objects, thereby increasing the performance and scalability of the web applications. Now that we have a basic idea about OOP, let us dive into understanding classes and objects.

[Sublime text is used as the text editor for this series. It is recommended to use a text editor or IDE of your choice. A few popular IDEs are Eclipse for PHP and the NetBeans IDE for PHP development.]

Classes and objects

In our first example, let us define a class. For creating a class, we would at least need one piece of information, the unique name for the class. In PHP, a class definition begins with the keyword `class`, and the keyword is followed by the unique name of the class. This is followed by a pair of curly braces and any class attributes and/or methods are enclosed into these curly braces.

Atmiya University Rajkot

There are two rules for naming a class in PHP mentioned as follows:

- It should begin with a letter or an underscore
- It can only contain letters, numbers, or underscores

It is a good practice to have the name of the class as part of the filename (for example, `class.Students.php`) or the actual filename itself (for example, `Students.php`). It is also common to use camel case, which is a common practice for naming the classes, class attributes, and class methods where multiple words are compounded into one, and the first letter of each word is written in upper case. Consider the following code snippet as an example showing a `Students` class:

```
<?php
    class Students
    {

        public function___construct()
            /**
            * Code to be executed
            *upon object instantiation
            */
        }
    }
?>
```

In this example, we are creating a `Students` class with a constructor using the `___construct` keyword. A constructor is the first function that is triggered upon the object instantiation. A constructor is commonly used for any bootstrapping purposes such as importing configurations and/or performing setup operations. The `___construct()` keyword is reserved by the PHP engine to identify the constructors in a class. Therefore, a constructor cannot be declared outside a class. The PHP engine treats a constructor like any other function; so, if a constructor is declared more than once, we will receive an error. Now that we understand how to create a class, let us continue with our `Students` class and add a few class attributes and class methods. After adding the attributes and methods, let us instantiate an object to access the attributes and methods. To instantiate an object, we will use the `new` keyword. We would need at least two pieces of information for the object instantiation; the first piece is the name of the object and the second is the name of class for which an object is being instantiated. Consider the following code example:

```
<?php
    class Students
    {
```


Atmiya University Rajkot

```
        public $first_name;
        public $last_name;
        public $address;

        public function__construct($first_name
          , $last_name, $address){

            $this->first_name = $first_name;
            $this->last_name = $last_name;
            $this->address = $address;
        }

        public function greeting(){
            return "Hello ".$this->first_name."\n";
        }

        public function getAddress(){
            return $this->address."\n";
        }
    }


    $student = new Students("John", "Doe", "3225 Woodland Park
      St");
    echo $student->greeting();
    echo $student->getAddress();
?>
```

In this example, we have added three class attributes or properties to store the first name, the last name, and the address of the student. We are initializing our properties via the constructor and the value for our properties will be passed in after the object instantiation. We have also added two class methods that would print out a greeting and return the address of the student. We are using the `$this` keyword to access our properties, and it can also be used to access the class methods as it is a reference to the `Students` object. We are using the `->` notation to access the properties or the methods of a class. After defining the class, we are instantiating an object of the `Students` class, and are calling the `$student` object. During the instantiation, we are passing in the arguments that are expected by our constructor, and these values are assigned to the properties. After the object instantiation, we are invoking the class methods using our `$student` object.

Atmiya University Rajkot

The output for the previous code will be as follows:

```
Hello John
3225 Woodland Park St
```

Static properties and methods

It is not always necessary to instantiate an object to access the properties or methods of a class. A class can also have static methods and properties that are bound to the class, rather than the object. To access a static method or a static property, we will use the scope resolution operator (`::`). To create a static property or static method, we will append the `static` keyword ahead of the variable. A static property or method will be commonly used to instantiate a database connection or a connection to a remote service that can add significant overhead. For a method to be accessible, the object of the class has to be created, during which a virtual method and member table are created for that class. While accessing static methods, we can avoid this overhead of creating a virtual method and member table for the class. Static methods are commonly used for high-performance systems.

We have successfully built our first class, instantiated the class, accessed the class methods, and discussed static methods and properties. During this process, we have already come across one of the four principles of OOP, which is abstraction. Abstraction is a concept about exposing the behavior and properties and hiding the particular code that performs that behavior. In our previous example, we have abstracted all the functionalities that a `student` object can have into the `Students` class, and have accessed those functionalities by creating an object of that class. The other three principles that we would look at are encapsulation, inheritance, and polymorphism.

Encapsulation

With abstraction, we have seen how to hide the underlying implementation that provides properties and methods. With encapsulation, let us see how we can expose a specific set of methods and properties, while hiding or restricting access to another set of properties and/or methods based on who is accessing this functionality. In our last example, we have used the keyword **public** while declaring the properties to define the access to those properties.

Atmiya University Rajkot

The access to the properties and methods in a class can be defined using **public**, **protected**, or **private** keywords as shown in the following table:

Visibility	Description	Comment
public	A public variable or a method can be accessed by anybody who can access the class.	All properties and methods are public by default.
protected	A protected variable or a method can only be accessed by the class members and the class members of a child class.	
private	A private variable or a method can only be accessed by the internal class members.	

Inheritance

Inheritance is commonly used when we want to create classes that would reuse the properties and/or class methods that are similar to existing classes. It is common to have this abstract high level functionality in a class that is referred to as the **base** or the **parent** class and then group this functionality into multiple different subclasses or child classes that would use properties or methods from that base class. In PHP, we use the `extends` keyword to inherit the functionality of a base class. There are at least two pieces of information that we would need for inheritance; the first is the parent class or base class and the second is the child class or subclass. In PHP, a child class can only have one parent class. Let's go over an example of inheritance where we create an `Animal` class and then inherit the functionality from the `Animal` base class to a `Dog` subclass. For this example, we will be housing these classes in different files, so the `Animal` class will go into `Animal.php` and the `Dog` subclass will go into `Dog.php`. Consider the following example where the `Animal` class will go into `Animal.php`:

```
<?php

class Animal{
    public $name;

    public function___construct($name){
        $this->name = $name;
    }

    public function greet(){
        return "Hello ".$this->name."\n";
    }
}

?>
```


Atmiya University Rajkot

Consider the following example where the `Dog` subclass will go into `Dog.php`:

```
<?php

require('Animal.php');

class Dog extends Animal{
    public function run(){
        return $this->name." likes to run \n";
    }
}

$dog = new Dog("scooby");
echo $dog->greet();
echo $dog->run();

?>
```

In this example, we have two classes: the first class is the `Animal` class that has a public property `$name` and a public method `greet`. The value of `$name` can be set when an object is created for the `Animal` class or for a subclass that extends the `Animal` class. In the greet method, we are greeting the animal. In the `Dog` class, we begin by requiring the file that contains the `Animal` class in order to inherit from that class.

The `require` keyword is used to insert the content of a PHP file into another file and the PHP engine explicitly verifies that the content has only been added once.

After requiring the `Animal.php` file, we are creating the `Dog` subclass and are using the `extends` keyword to inherit the functionality of the `Animal` class. As dogs love to run, let us add a `run` method into the `Dog` class. After we have defined the `Dog` class, we will go forward and create an object of the `Dog` class and pass in a name to it. Though we have not declared and defined a constructor for the `Dog` class or the `greet` method in the `Dog` class, they would be available as we are inheriting the method from the `Animal` base class and both the constructor and the `greet` method are `public`.

The output for the previous code snippets is as follows:

```
Hello scooby
scooby likes to run
```


Atmiya University Rajkot

Magic methods

Before we move onto polymorphism, let us go over a few magic methods that are provided by PHP to perform operations such as property overloading, method overloading, and representing an object as text. These magic methods are collections of special methods that respond to an event. The magic methods follow a unique naming convention where the name is prepended by two underscores ("__"); one of the magic method that we have already worked with is the `__construct()` method that is automatically fired upon object instantiation. A few other magic methods that we would work with are `__destruct()`, `__get()`, `__set()`, `__toString()`, `clone()`, and `__call()`.

It is recommended to refer to the official PHP documentation at `php.net` to understand and read more about these and more magic methods that are made available by PHP.

Constructors and destructors

We have already seen a couple of examples of how a constructor can be used to bootstrap an object upon instantiation. Constructors are commonly used to initialize properties and run any setup operations that are required to get the operations started. A destructor is called when the object is about to be destroyed. A destructor is used to perform clean-up operations such as destroying any open resource connections to the database or destroying an open file handle that has been created by the object. Consider the following example of `ConsDesc.php`:

```
<?php

    classConsDesc{
        /**
        * Constructor
        */
        public function___construct(){
            // initialize variables
            // log the time zone of the user
            // open database connections
            // open file handles
        }

        /**
        * Destructor
        */
```


Atmiya University Rajkot

```
        public function__destruct(){
            // close database connections
            // close file handles
        }
    }

?>
```

In this example, we are creating a class with a constructor and a destructor, and mentioning the common functionalities that can be part of these magic methods.

> In PHP, overloading refers to dynamic generation of a property or a method that has not yet been declared or is visible in the current scope.

Property overloading

Property overloading is performed when code attempts to access or set a missing property. For example, let us add a `$type` property with `protected` visibility to our `Animal` class. As the `$type` property is of a `protected` type, we will not be able to set a value after object instantiation. However, the value of the `$type` property should be available with read-only capabilities. To accomplish this task, we will use the `__get()` magic method provided by PHP as shown in the following example in `Animal.php`:

```
<?php

class Animal{
    public $name;
    protected $type;

    public function__construct($name){
        $this->name = $name;
    }


    public function greet(){
        return "Hello ".$this->name."\n";
    }
}

?>
```


Atmiya University Rajkot

The only change that has been made to the `Animal` class that we built in the last section was to add the `$type` property with `protected` visibility. Now let us extend the `Animal` class and set the type based on the type of animal that we are creating the class for, as shown in the `Dog.php` file present in the code bundle:

```
<?php
require('Animal.php');

class Dog extends Animal{
    protected $type=__CLASS__;

    public function_get($property){
        if(property_exists($this, $property)){
            return $this->$property."\n";
        }
        else{
            return $property." does not exist \n";
        }
    }

    public function run(){
        return $this->name." likes to run \n";
    }

}

$dog = new Dog("scooby");
echo $dog->type;
echo $dog->greet();
echo $dog->run();

?>
```

In this example, we are extending the `Animal` class and setting the value of the `$type` protected property using `__CLASS__`, which is a magic constant. Then we are using the `__get()` magic method to return the value of `$type`. In our magic method, we are using a conditional statement to verify that the requested property exists within the scope of the current class. After checking to see if the property exists, we are gracefully allowing the execution to either return the value of the property on success, or display a message if the property does not exist.

[The `_CLASS` keyword is a magic constant that returns the name of the class it is in.]

Atmiya University Rajkot

The output of the previous code snippets is as follows:

```
Dog
Hello scooby
scooby likes to run
```

We have looked at the `__get()` method that allows us to retrieve the value of a property; now let us look at the `__set()` method that allows us to change the value of a property. The setter magic method is commonly used to set values into an overloaded property, and take two arguments, the first being the name of the property and the second being the value to be assigned to that property. It is important to note that a setter magic method can expose protected and private class properties if the necessary checks are not performed. Let us build a `User` class that would store its overloaded properties into a `private` class property and let us see that the data can be populated via the setter method and retrieved via the getter method in `User.php` as shown in the following example:

```php
<?php

    class User{
        private $data = array();

        public function__set($key, $value){
            $this->data[$key] = $value;
        }

        public function_get($key){
            if(array_key_exists($key, $this->data)){
                return $this->data[$key];
            }
        }
    }

    $user = new User();
    $user->first_name = "John";
    $user->last_name = "Doe";
    echo $user->first_name.' '.$user->last_name."\n";
?>
```

In this example, we are building a `User` class with a private class property. This private class property can store an array of dynamically declared properties; this type of dynamic property declaration is done while dealing with schema-less data architectures or architectures that support multiple schemas.

Atmiya University Rajkot

Here the `__get()` method is as important as the `__set()` method as if we try and access the first name and last name properties for the `$user` object without defining the `__get()` method, we would get an `Undefined Property` error.

The output of the previous code is as follows:

```
John Doe
```

Method overloading

PHP provides the `__call()` method to handle the concept of method overloading. This magic method is fired when the code attempts to call for methods that are either not accessible due to the scope or do not exist. This magic method can be either used to provide minimal access to such inaccessible methods or could be used to print out an error message gracefully. The `__call()` method takes two arguments, the first argument is the name of that function and the second argument could either be a single value or an array of values that have to be passed into that function.
Let us build a `MyMath` class with a `__call()` magic method in `MyMath.php` shown as follows:

```
<?php
    classMyMath{
        public $a=0;
        public $b=0;

        public function___construct($a, $b){
            $this->a = $a;
            $this->b = $b;
        }

        public function add(){
            return $this->a + $this->b."\n";
        }

        public function___call($name, $arguments){
            return "A function with name: ".$name." does not
              exist\n";
        }
    }

    $math = new MyMath(5,6);
    echo $math->add();
    echo $math->subtract();

?>
```


Atmiya University Rajkot

In this example, we are working with a class that takes two values upon object instantiation and returns the sum of those values when the `add()` method is called. This class does not have a `subtract` method but, when the `subtract` method is called by the object, the execution is gracefully passed into the `__call()` magic method. In this example, we are returning an error statement that says that the function does not exist. We could also use PHP's `call_user_func_array()` method to invoke any other functions that could serve this purpose; this is another example of code abstraction.

The output of the previous code is as follows:

```
11
A function with name: subtract does not exist
```

Representing an object as text

The last magic method that we will work with is the `__toString()` magic method, which is invoked when an object is treated like a string. In this case, the code tries to print out the object and at that point the PHP engine looks for an implementation of the `__toString()` method. If we do not have the `__toString()` magic method and if we print the object, we would receive a notice that would say that object could not be converted to a string. We will be going over this method while working on the factory design pattern.

Polymorphism

Polymorphism, as the name suggests, is a principle that allows different classes to have common methods that have the same name and signature but provide different functionality. It is a practice of sharing common programming functionality among classes in a single project. Let us take the example of a cat, a dog, and a duck. All of them are animals; cats and dogs belong to the family of mammals, while a duck belongs to the family of birds. Though all of them are animals, when representing them as objects, they share a few common features and those common features can live in the `Animal` base class. Let us consider a common feature such as talking or speaking, while a human can speak, a dog barks, a cat meows, and a duck quacks. So if the common feature is communication, the way communication is implemented among them is different. Let us use the concept of polymorphism to tackle this example and represent it in objects and classes in `Animal.php` as shown in the following example:

```
<?php

class Animal{
```


Atmiya University Rajkot

```
    public $name;
    protected $type;

    public function___construct($name){
        $this->name = $name;
    }

    public function greet(){
        return "Hello ".$this->name."\n";
    }

    public function run(){
        return $this->name."  runs \n";
    }

    public function communicate(){
        return $this->name." says rrrrrr";
    }
}

?>
```

Consider the following example in the `Dog.php` file extending the `Animal` base class:

```
<?php
require('Animal.php');

class Dog extends Animal{
    protected $type=__CLASS__;

    public function_get($property){
        if(property_exists($this, $property)){
            return $this->$property."\n";
        }
        else{
            return $property." does not exist \n";
        }
    }

    public function run(){
        return $this->name." likes to run \n";
    }
    public function communicate(){
        return $this->name." says bow wow \n";
    }
}
```


Atmiya University Rajkot

```
$dog = new Dog("scooby");
echo $dog->type;
echo $dog->greet();
echo $dog->run();
echo $dog->communicate();

?>
```

Let us discuss this example before we look at our new `Cat` class. We have added the `run()` and `communicate()` methods to our `Animal` base class and are overriding these methods in the `Dog` subclass. My dog loves to run, so I am overriding the `run` method in the base class as it is too generic; by overriding this method in my subclass, I am making sure that my subclass functionality is implemented.

The output of the previous code snippet is as follows:

```
Dog
Hello scooby
scooby likes to run
scooby says bow wow
```

Upon execution, the name of the class is printed as our `__get()` magic method is fired. Then the `greet()` method is executed, and the outputs of the two methods that were overridden in the subclass are printed. Scooby really loves to run and is quite a talker. Now let us look at the implementation of these methods in our `Cat` class in `Cat.php` as shown in the following example:

```
<?php

require('Animal.php');

class Cat extends Animal{
    protected $type=__CLASS__;

    public function_get($property){
        if(property_exists($this, $property)){
            return $this->$property."\n";
        }
        else{
            return $property." does not exist \n";
        }
    }

    public function run(){
        return $this->name." hates to run \n";
    }
```


Atmiya University Rajkot

```
    public function communicate(){
        return $this->name." says meow \n";
    }
}

$cat = new Cat("cuddles");
echo $cat->type;
echo $cat->greet();
echo $cat->run();
echo $cat->communicate();

?>
```

Our `Cat` class is similar to the `Dog` class, except for the implementation of the `run()` and `communicate()` method. We are using the `greet()` method from the `Animal` base class. Let us execute this code and examine the output shown as follows:

```
Cat
Hello cuddles
cuddles hates to run
cuddles says meow
```

Upon execution, the name of the class is fired by our getter method and the `greet()` method is fired next. After the `greet()` method, the overridden implementations of the `run()` and `communicate()` method are fired. Unlike Scooby, Cuddles is very lazy and hates to run.

Interfaces

In our previous example, we noticed that the `run()` method and the `communicate()` method are not being used by the `Animal` class, but are only present in that class so the subclasses can inherit those methods and override them. As we start building bigger applications, we will be dealing with different types of data with different types of functionality. Though the underlying functionality is different, the high-level description and aim could still be the same, as in case of `run` and `communicate`. So, using multiple names for the same functionality would lead to confusion and inconsistency. To avoid this confusion, we can utilize the object interfaces provided by PHP 5. Unlike a regular class, an object interface would only specify the methods that the class must implement, but doesn't provide a specific implementation for those methods, unlike the `Animal` class in the previous example. All methods in an interface are `public` by default. Let us move the `run()` method and the `communicate()` method into the interface as the `Animal` class is not the apt location for those methods.

Atmiya University Rajkot

Creation of an interface would at least need two pieces of information, the first one being a unique name of the interface and the second the signature of at least one method. It is a common convention to prefix the names of interfaces with the letter "I" in uppercase. The interface, like a class, will be stored in a separate file with the same name as the interface. Let us build our first interface and see how we cascade the changes into the rest of our files. To implement an interface, we use the `implements` keyword followed by the name of the interface in `IAnimal.php` shown as follows:

```
<?php

    interfaceIAnimal{
        function run();
        function communicate();
    }

?>
```

Now that we have moved the `run()` method and the `communicate()` method into our interface into our `Animal` class, which is implementing the interface, those methods have to be implemented in `Animal.php` as shown in the following example:

```
<?php
require_once('IAnimal.php');

class Animal implements IAnimal{
    public $name;
    protected $type;

    public function___construct($name){
        $this->name = $name;
    }

    public function greet(){
        return "Hello ".$this->name."\n";
    }
    public function run(){
        return $this->name." likes to run \n";
    }

    public function communicate(){
        return $this->name." says bow wow \n";
    }

}

?>
```


Atmiya University Rajkot

Now let us extend the `Animal` class in the `Dog` class in `Dog.php` as shown in the following example:

```
<?php
require('Animal.php');

class Dog extends Animal{
    protected $type=__CLASS__;

    public function_get($property){
        if(property_exists($this, $property)){
            return $this->$property."\n";
        }
        else{
            return $property." does not exist \n";
        }
    }

}

$dog = new Dog("scooby");
echo $dog->type;
echo $dog->greet();
echo $dog->run();
echo $dog->communicate();

?>
```

We begin by requiring the file that carries the interface; once the snippet is ingested into our `Dog.php` file, the interface can be implemented by using the `implements` keyword.

Abstract classes

One thing that we have noticed here is that we are not creating an object for the `Animal` class, and are only using this class to house the definitions of common functionality among animals. PHP 5 arrives with a concept of abstract classes. Abstract classes cannot be instantiated and should only be used to provide functional direction and behavior to the subclasses. To create an abstract class, add the keyword `abstract` before the `class` keyword in `Animal.php` as shown in the following example:

```
<?php

abstract class Animal{
    public $name;
```


Atmiya University Rajkot

```
    protected $type;

    public function__construct($name){
        $this->name = $name;
    }

    public function greet(){
        return "Hello ".$this->name."\n";
    }
}

?>
```

The output would still remain the same as before but one thing that we have noticed is that our code looks a lot cleaner, consistent, and scalable. If we add a new animal, we would have to extend the `Animal` abstract class, implement the `IAnimal` interface, and add any custom functionality that the new animal requires. Now that we are at a good place with the OOP concepts, let us look at a few popular design patterns.

Design patterns

Design patterns are generalized solutions to common problems that have already been solved by programmers. These patterns are reusable solutions that have been built by software development teams and the community of software developers. Design patterns are often agnostic to the programming languages as they focus on the problem, rather than the implementation of the solution. The popular design patterns that we will look at are the **factory** pattern and the **singleton** pattern.

The factory pattern

The factory pattern is one of the most commonly used design patterns. As the name suggests, there will be a class that is dedicated just to the generation of objects. Rather than directly creating an object, we will use the factory class to create objects for a class. This is done in order to minimize the amount of changes that have to be made across the project due to a change in the class for which the factory is being used. Let us look at the following example in `DesignPattern-Factory.php` to simplify this:

```
<?php
    class Car{
        private $make;
        private $model;
```


Atmiya University Rajkot

```
        public function___construct($make, $model){
            $this->make = $make;
            $this->model = $model;
        }

        public function___toString(){
            return "The make is ".$this->make." and the model is
".$this->model." \n";
        }
    }

    classCarFactory{
        public static function create($make, $model){
            return new Car($make, $model);
        }
    }
    $car = CarFactory::create("Audi", "Q5");
    echo $car;
?>
```

In this example, we begin by building the `Car` class that has `$make` and `$model` as `private` properties. The values for these properties will be assigned upon the object's instantiation. We are using the `__toString()` magic method to print out the make and the model of the `car` object that is being built. After the `Car` class, we have the `CarFactory` class that has the `static` function that creates and returns the `Car` object.

The output of the previous code is as follows:

```
The make is Audi and the model is Q5
```

The singleton pattern

The singleton pattern is commonly used while establishing a connection to the database or while working with a remote service, as they can add significant overhead that affect the operations of the application. In a singleton pattern, the instantiation is restricted to a single instance, thereby avoiding overhead of multiple instances. We will need at least three pieces of information to use the singleton pattern: the first is a unique name for the class, the second piece would be a private constructor that would free us from creating multiple objects, and the third being a static method that would return the instance. Consider the following code in `DesignPattern-Singleton.php`:

```
<?php
    class DB{
```


Atmiya University Rajkot

```
        private static $singleton;

        private function__construct(){}

        public static getInstance(){
            if(self::$singleton){
                self::$singleton = new DB();
            }

            return self::$singleton;
        }

    }

    $db = new DB::getInstance();
?>
```

In this example, we are using the singleton pattern to restrict object instantiation by using a private constructor. We are using the static `getInstance()` method to instantiate an object to the `DB` class. As this is a static method, it is bound to the class.

This is not a full-fledged example and this should only be used as a high-level concept. We will be adding the connection parameters to this class in *Chapter 3*, *Advanced Programming with PHP*, while working with the MariaDB database.

Error handling

Error handling is a very important part of the software development life cycle. Errors can be briefly divided into three categories:

- Syntax errors
- Runtime or external errors
- Logic errors

A syntax error could be caused due to a missing semicolon or a missing closing brace. A runtime or an external error could be caused due to a missing file that has been added to our script using `require` or `require_once`, a broken file handle, or a broken database connection. At runtime, if the execution is expecting a specific set of resources and if they are not provided, we would receive runtime errors.

Atmiya University Rajkot

Logic errors are caused due to wrong interpretations of requirements or just faulty code. They are referred to as bugs, and are common part of the software development life cycle. PHP is shipped with a built-in support for error handling, and groups these errors into different severity levels. It is a common practice to log the errors that are generated, and based on the severity of the error, it is also advised to send notifications as required. PHP's core settings are located in the `php.ini` file that is located in the server configurations folder, a constant name is assigned to each of the severity levels. Let us look at the different levels of errors that are provided by PHP as shown in the following table:

Constant	Description
`E_ERROR`	These are fatal runtime errors and the execution cannot be recovered from these errors. Until the error is not fixed, this error will not subside. For example, a script is expecting a connection to a database that does not exist.
`E_WARNING`	These are non-fatal runtime warnings that do not halt the execution. For example, a file that has been included via `include` or `include_once` does not exist.
`E_PARSE`	These are fatal errors that occur when a script cannot be parsed due to a syntax error. For example, the script is missing a semicolon or an apostrophe.
`E_NOTICE`	These are nonfatal notices that are encountered by the script.
`E_DEPRECATED`	These are nonfatal notices that are provided by PHP to warn about code that will not be available in future versions.
`E_STRICT`	These are runtime notices that suggest changes that will ensure the best interoperability and forward compatibility with future versions of PHP.
`E_ALL`	These are all errors and warnings supported by PHP.
`E_CORE_ERROR`	These are fatal run-time errors that are generated in the PHP core engine.
`E_COMPILE_ ERROR`	These are fatal compile-time errors generated by the PHP core engine.

Atmiya University Rajkot

These are the common types of errors, warnings, and notices that we come across while scripting with PHP. In order to display them during execution, we will have to update the `php.ini` file as shown in the following table:

Setting	Description	Note
`error_reporting`	This setting controls the types of errors, warnings, and notices that have been triggered.	`E_ALL`, `~E_DEPRECATED` and `~E_STRICT` are the recommended settings for production.
`display_errors`	This setting controls whether or not to display errors to the screen.	The `display_errors` setting should only be turned on in the development and testing environments. This has to be turned off for staging and production environments.
`log_errors`	This setting controls whether the errors are logged or not.	It is recommended to turn this setting on in all environments.
`report_memleaks`	This setting helps in tracking the memory leaks in the application.	This setting will need `E_WARNING` to be included in error reporting.
`html_errors`	This setting displays the error with a better HTML format making it easier to read.	It is recommended to turn this setting on in all environments.

PHP also contains the `trigger_error()` function that allows the user to fire a custom error from a script. There are three levels of custom errors that can be generated by using the `trigger_error()` function:

- `E_USER_NOTICE`
- `E_USER_WARNING`
- `E_USER_ERROR`

Atmiya University Rajkot

Consider the following code in `Trigger_error.php`:

```
<?php
    $value = 0;

    if($value>0){
        while($value < 10){
            echo $value;
            $value++;
        }
    }
    else{
        trigger_error("Value is not greater than 0");
    }

?>
```

In this example, we are initializing the `$value` variable to `0`, and are checking to see if the value is greater than zero. This condition will certainly fail, as this is an example of a logic error. In our `else` block, we are using the `trigger_error()` method to fire a PHP notice to indicate this logic error.

The output of the previous code is as follows:

```
PHP Notice:  Value is not greater than 0 in
  /var/www/chapter4/Trigger_error.php on line 12
```

Let us look at an alternative for not printing out warnings, notices, and errors. PHP provides the error suppression operator (`@`) to hide any warnings, errors, or notices that will be printed out on the page. This is not a recommended practice and should only be used to avoid printing them onto the page, as shown in the following code in `error_suppression.php`:

```
<?php
include("fileDoesNotExist");

function add($a, $b){
    return $a+$b."\n";
}

echo add(5,4);
?>
```


Atmiya University Rajkot

When this script is executed, a PHP warning would be fired as the `include` function cannot locate the file; however, as it is just a warning, the execution will continue and the output will be the value returned by the `add` function.

The warning generated will be:

```
PHP Warning: include(fileDoesNotExist): failed to open stream: No
such file or directory in /var/www/chapter4/error_suppression.php on
line 3
PHP Warning: include(): Failed opening 'fileDoesNotExist' for
inclusion (include_path='.:/usr/share/php:/usr/share/pear') in /var/
www/chapter4/error_suppression.php on line 3
```

The output generated will be:

```
9
```

Now let us prepend the suppression operator to the include statement as shown in the following code in `error_suppression.php`:

```
<?php

@include("fileDoesNotExist");

function add($a, $b){
    return $a+$b."\n";
}

echo add(5,4);

?>
```

After we have added the suppression operator, the script executes smoothly and the warning is not fired onto the output shown as follows:

```
9
```


Atmiya University Rajkot

Summary

In this chapter, we have gone through the concepts of Object-oriented programming such as classes and objects, abstraction, encapsulation, inheritance, magic methods, polymorphism, interfaces, and abstract classes. We have also covered the basics of design patterns and error handling.

In the next chapter, we will go over the new features that are part of PHP 5.4 and 5.5; we will focus on another aspect of error handling, exception handling, and how PHP 5.5 has made exception handling better. Then we will continue to focus on avoiding errors and exceptions by setting up unit tests for our code.

Atmiya University Rajkot

No.	Topics	Details
1.	**Introduction**	• Meaning of OS • Functions of OS • OS Types • Introduction of OS process • Process State Transition Diagram • Process Scheduling Non Preemptive Preemptive • FCFS o SJN and Round Robin algorithms • Physical Memory and Virtual Memory • Memory Allocation Contiguous Memory Allocation Noncontiguous Memory Allocation • Paging

(1)What is operating System? Explain the abstract view of the components of a computer system.

- An operating system (OS) is a collection of software that manages computer hardware resources and provides various services for computer programs**. It acts as an intermediary between the user of a computer and the computer hardware.**

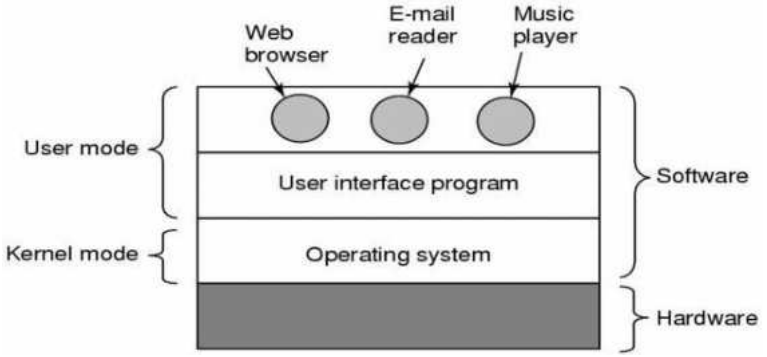

- Os is one kind of system software which is directly interact with hardware device and end user application program

Figure 1-1. A computer system consists of hardware, system programs, and application programs.

- The placement of the operating system is shown in Fig. 1-1. At the bottom is the hardware, which, consists of integrated circuit chips, wires, disks, a key board, a monitor and similar physical devices.
- On the top of the hardware is the software.(**1.system software 2.application software**)
- Operating system runs on the hardware and it provides base for the rest of the software.
- Most computers have two modes of operation: kernel mode and user mode.
- The operating system is the most fundamental piece of software and runs in kernel mode.
- In this mode it has complete access to all the hardware and can execute any instruction that the machine is capable of executing
- The rest of the software runs in user mode, in which only a subset of the machine instructions is available. Here we find the command interpreter (shell), compilers, editors, and other system programs.
- Finally, above the system programs are the application programs. These programs are purchased or written by the users to solve their particular problems, such as word processing, spreadsheets, web browser or music play To hide complexity of hardware.

Function of operating system

Operating systems perform two basically unrelated functions: providing a clean abstract set of resources instead of the messy hardware to application programmers and managing these hardware resources.

(1) Give the view of OS as an extended machine (Operating System as an Extended Machine)

- The architecture (instruction set, memory, I/O, and bus structure) of most computers at the machine level language is primitive and awkward to program, especially for input / output operations.
- The major task is to convert human readable form in to machine level language vice versa
- Users do not want to be involved in programming of storage devices and such kind of converter.
- Operating System provides a set of basic commands or instructions to perform various operations such as read, write, modify, save or close.
- Dealing with them is easier than directly dealing with hardware.
- To deal with such complexity, system program is available known as system call the task of system call is to accepts command from user's application software and generate interrupt for the os
- Thus, Operating System hides the complexity of hardware and presents a beautiful interface to the users.

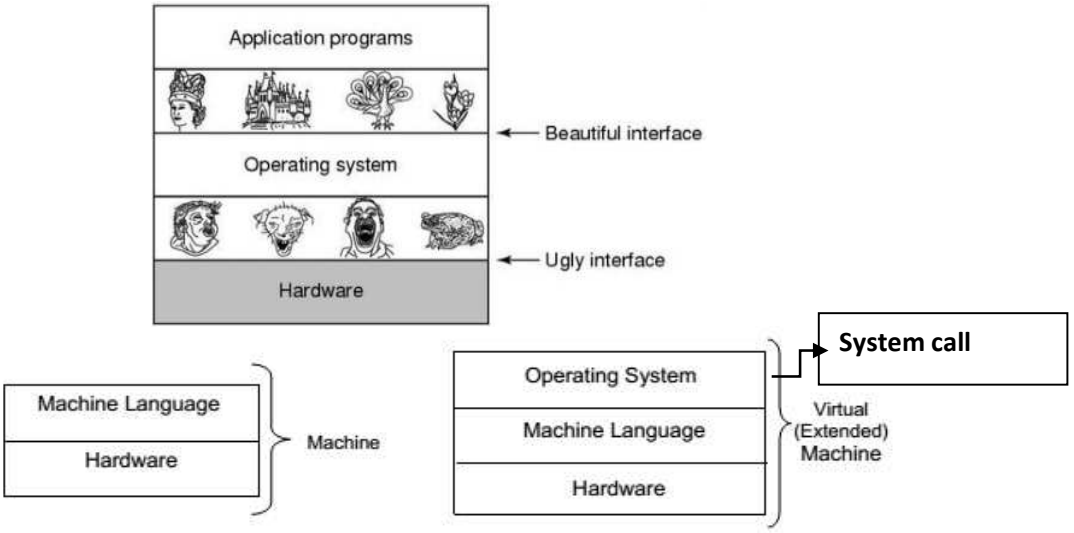

Figure 1-2. Operating Systems turn ugly hardware into beautiful abstractions.

- Just as the operating system shields (protect from an unpleasant experience) the

- programmer from the disk hardware and presents a simple file-oriented interface, it also conceals a lot of unpleasant business concerning interrupts, timers, memory management, and other low level features.
- In each case, the abstraction offered by the operating system is simpler and easier to use than that offered by the underlying hardware.
- In this view, the function of the operating system is to present the user with the equivalent of an **extended machine** or **virtual machine** that is easier to work with than the underlying hardware.
- The operating system provides a variety of services that programs can obtain using special instructions called system calls.

(2) Give the view of OS as a Resource Manager.

- The concept of an operating system as providing abstractions to application programs is a top down view.
- Alternatively, bottom up view holds that the OS is there to manage all pieces of a complex system.
- A computer consists of a set of resources such as processors, memories, timers, disks, printers and many others.
- The Operating System manages **these resources and allocates them to specific programs.**
- As a resource manager, Operating system provides controlled allocation of the processors, memories, I/O devices among various programs.
- Multiple user programs are running at the same time.
- The processor itself is a resource and the Operating System decides how much processor time should be given for the execution of a particular user program.
- Operating system also manages memory and I/O devices when multiple users are working.
- The primary task of OS is to keep the track of which programs are using which resources, to grant resource requests, to account for usage, and to resolve conflicting requests from different programs and users.
- An Operating System is a control program. A control program controls the execution of user programs to prevent errors and improper use of computer.
- **Resource management includes multiplexing (sharing) resources in two ways: in time and in space.**

Atmiya University Rajkot

Time multiplexing

- When a resource is time multiplexed, different programs or users take turns using it. First one of them gets to use the resource, then another, and so on the algorithm known as time multiplexing.
- For example, CPU and printer are time multiplexed resources. OS decides who will use it and for how long.

Space multiplexing

- The other kind of multiplexing is space multiplexing, instead of the customers taking turns, each one gets part of the resource the algorithm known as space multiplexing.
- For example, both primary and secondary memories are space multiplexed. OS allocates them to user programs and keeps the track of it.

(3) Explain different types of tasks done by OS. OR
Write different services provided by operating system.

- Operating system services and facilities can be grouped into following areas:

Program development

- Operating system provides editors and debuggers to assist (help) the programmer in creating programs.
- Usually these services are in the form of utility programs and not strictly part of core operating system. They are supplied with operating system and referred as application program development tools.

Program execution

- A number of tasks need to be performed to execute a program, such as instructions and data must be loaded into main memory. I/O devices and files must be initialized.
- The operating system handles these scheduling duties for the user.

Access to I/O devices

- Each I/O devices requires its own set of instruction for operations.
- Operating system provides a uniform interface that hides these details, so the programmer can access such devices using simple reads and writes.

Memory Management

- Operating System manages memory hierarchy.

Atmiya University Rajkot

- It keeps the track of which parts of memory are in use and free memory.
- It allocates the memory to programs when they need it.
- It de-allocates the memory when programs finish execution.

Controlled access to file

- In the case of file access, operating system provides a directory hierarchy for easy access and management of files.
- OS provides various file handling commands using which users can easily read, write, and modify files.
- In case of system with multiple users, the operating system may provide protection mechanism to control access to file.

System access

- In case of public systems, the operating system controls access to the system as a whole.
- The access function must provide protection of resources and data from unauthorized users.

Error detection and response

- Various types of errors can occur while a computer system is running, which includes internal and external hardware errors. For example, memory error, device failure error and software errors as arithmetic overflow.
- In case, operating system must provide a response that clears error condition with least impact on running applications.

Accounting

- A good operating system collects usage for various resources and monitor performance parameters.
- On any system, this information is useful in anticipating need for future enhancements.

Protection & Security

- Operating systems provides various options for protection and security purpose.
- It allows the users to secure files from unwanted usage.
- It protects restricted memory area from unauthorized access.
- Protection involves ensuring that all access to system resources is controlled.

Atmiya University Rajkot

(4)Types of os

All the operating system consist of similar component and perform similar functions but the method and procedure for performing these function are different.
Operating system classified in to different categories based on their features

(4.1)Give the features of Batch Operating System.

- Batch operating system is one that processes routine jobs without any interactive user presents. Such as claim processing in insurance and sales reporting etc.
- To improve utilization, the concept of batch operating system was developed.
- The batch operating system place the users job on a input queue and these jobs are stored as batch
- A batch is sequence of users job
- Jobs with similar needs were batched together and were run through the computer as a group.
- The primary function of batch processing system is to implement the processing of job in batch without requiring any intervention of the operator
- It is the task of the batch monitor to execute all jobs at define interval of time
- The batch monitor accept the commands for initialization, processing and termination of batch it execute the next job in sequence
- The part of the memory occupied by the batch monitor is called system area and the part occupied by the user is known as user area.
- The scheduling is based on FCFS algorithm
- With the use of this type of operating system, the user no longer has direct access to machine.

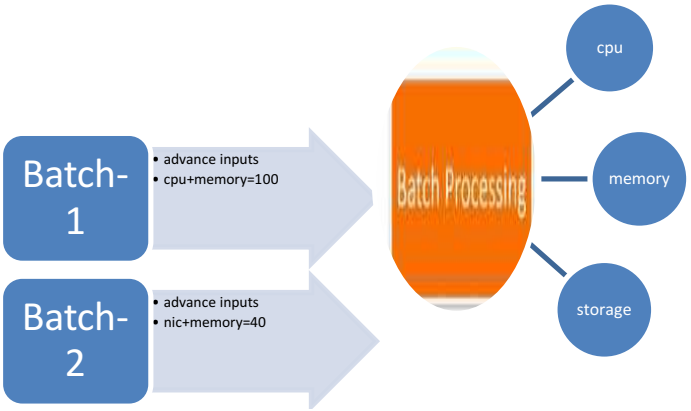

- Advantages:
  - Move much of the work of the operator to the computer.
  - Increase performance since it was possible for job to start as soon as the previous job finished.
- Disadvantages:
  - Large Turnaround time.
  - More difficult to debug program.
  - Due to lack of protection scheme one batch job can affect pending jobs.

(4.2)Explain the features of Time Sharing System.

- Time Sharing is a logical extension of multiprogramming.
- Multiple jobs are executed simultaneously by switching the CPU back and forth among them.
- The switching occurs so frequently (speedy) that the users cannot identify the presence of other users or programs.
- Users can interact with his program while it is running in timesharing mode.
- Processor's time is shared among multiple users. An interactive or hands on computer system provides online communication between the user and the system.
- A time shared operating system uses CPU scheduling and multiprogramming to provide each user with a small portion of a time shared computer. Each user has at least one separate program in memory.
- A time shared operating system allows many users to share computer simultaneously. Since each action or command in a time shared system tends to be short, only a little CPU time is needed for each user.
- The time known as time slice or cpu quantum

Atmiya University Rajkot

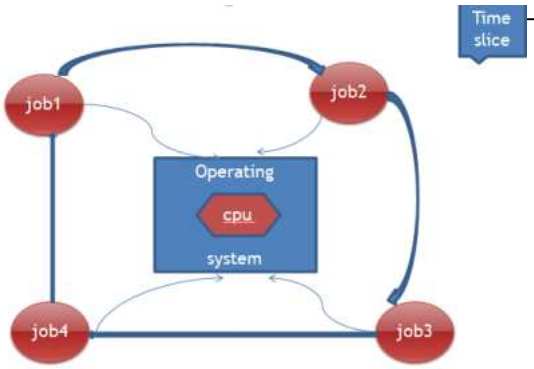

- Advantages :-
  - Easy to use
  - User friendly
  - Quick response time

- Disadvantages:-
  - If any problem affects the OS, you may lose all the contents which have stored already

  Unwanted user can use your own system in case if proper security options are not available

(4.3)Explain the features of Multiprogramming Operating System:

- Multiprogramming is technique to execute number of program simuntensiouly by single cpu

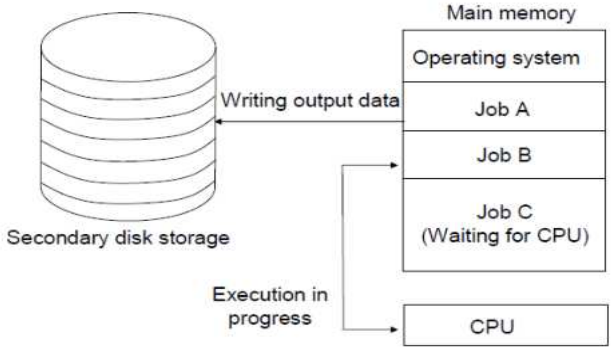

- In multiprogramming number of process in main memory
- The os picks and begin to execute one of the job in main memory
- If any input output happens in process then cpu switch to another job it is called multiprogramming

- The os allows multiple jobs to execute multiple job in single cpu
- Advantages
  - Cpu is not ideal at any time
  - Efficient memory utilization
  - Throuput put time is increase

(4.4)Explain the features of Real Time Operating System.

- A real time operating system is used, when there are rigid (strict) time requirements on the operation of a processor or the flow of data.
- It is often used as a control device in a dedicated application. Systems that control scientific experiments, medical imaging systems, and industrial control system are real time systems. These applications also include some home appliance system, weapon systems, and automobile engine fuel injection systems.
- Real time Operating System has well defined, fixed time constraints. Processing must be done within defined constraints or the system will fail.
- Since meeting strict deadlines is crucial in real time systems, sometimes an operating is simply a library linked in with the application programs.
- There are two types of real time operating system,
  - Hard real system:
    - ✓ This system guarantees that critical tasks complete on time.
    - ✓ Many of these are found in industrial process control, avionics, and military and similar application areas.
    - ✓ This goal says that all delays in the system must be restricted.
  - Soft real system:
    - ✓ In soft real-time system, missing an occasional deadline, while not desirable, is acceptable and does not cause any permanent damage.
    - ✓ Digital audio or multimedia systems fall in this category.
- An example of real time system is e-Cos.

Atmiya University Rajkot

Process

(1) *What is Process? Give the difference between Process and Program.*

Process:

- Process is a program under execution.

- It is an instance of an executing program, including the current values of the program counter, registers & variables.
- Process is an abstraction of a running program.
- Process is start when cpu allocate to program
- There are many resources are required to create process such as memory , cpu ,i/o files
- Once a program is in the process there are many operation done on it like delete , suspend interrupt , create and dead lock.

Process	Program
A process is program in execution.	**A program is set of instructions.**
A process is an active/ dynamic entity.	A program is a passive/ static entity.
A process has a limited life span. It is created when execution starts and terminated as execution is finished.	A program has a longer life span. It is stored on disk forever.
A process contains various resources like memory address, disk, printer etc… as per requirements.	A program is stored on disk in some file. It does not contain any other resource.
A process contains memory address which is called address space.	A program requires memory space on disk to store all instructions.

(2) *Explain Process Control Block (PCB).*

PCB (Process Control Block):

- To implement the process model, the operating system maintains a table (an array of structures) called the process table, with one entry per process, these entries are known as Process Control Block.
- Process table contains the information what the operating system must know to
- manage and control process switching, including the process location and process attributes.

Atmiya University Rajkot

- Each process contains some more information other than its address space. This information is stored in PCB as a collection of various fields. Operating system maintains the information to manage process.

- Various fields and information stored in PCB are given as below:
  - **Process Id:** Each process is given Id number at the time of creation.
  - **Priority :** it comes in number lesser number has high priority.
  - **Process state:** The state may be ready, running, and blocked.
  - **Program counter:** The counter indicates the address of the next instruction to be executed for this process.
  - **CPU registers:** The registers vary in number and type, depending on the computer architecture. They include accumulators, index registers, stack pointers, and general-purpose registers, plus any condition-code information. Along with the program counter, this state information must be saved when an interrupt occurs, to allow the process to be continued correctly afterward.
  - **CPU-scheduling(event) information:** This information includes a process priority, point- ers to scheduling queues, and any other scheduling parameters.
  - **Memory-management information:** This information may include such information as the value of the base and limit registers, the page tables, or the segment tables, depending on the memory system used by the operating system.
  - **Accounting information(resource held):** This information includes the amount of CPU and real time used, time limits, account numbers, job or process numbers, and so on.
  - **Status information(Pcb pointer):** The information includes the list of I/O devices allocated to this process, a list of open files, and so on.the pcb pointer point to the next pcb in sequence

Atmiya University Rajkot

(3)PSTD (Process state transition diagram):

- PSTD indicate the current nature of the process it display information about the active process those are scheduled.
- When user is assign program to the system os generate PCB for that job basis on the policy process are passed in to PSTD with different five state known as process state transition diagram.

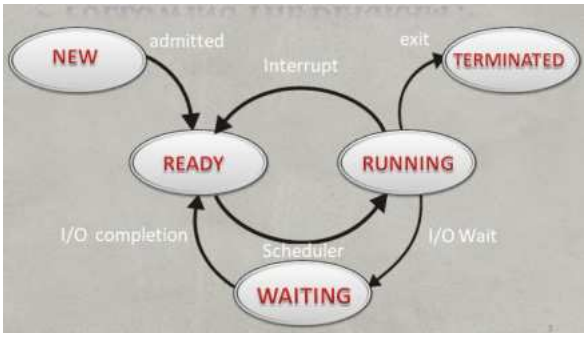

NEW (HOLD) STATE:

- Any process submited to the system it enter in new state **job scheduler** select the job basis on the predetrmine policy and send it to ready state.

READY STATE:

- In this state process are ready to get excute , reside in main memory and wait for theprocessor

RUNNING STATE:

- Process shceduler select the job basis on the **algorithem** and send it to the processor there are different types of algorithem as per the os.

WAITING STATE:

- During the execuation of process any input is require then it send to the waiting state and then ready state.if timer interrupt arise then it directly send to ready state.

TERMINATED(FINISH) STATE:

- Process shceduler terminate the process. It may be many situation like finish the process,delete etc.

Atmiya University Rajkot

(4) What is scheduler? Explain queuing diagram representation of process scheduler with figure.

Scheduler:

- A program or a part of operating system that arranges jobs or a computer's operations into an appropriate sequence is called scheduler.

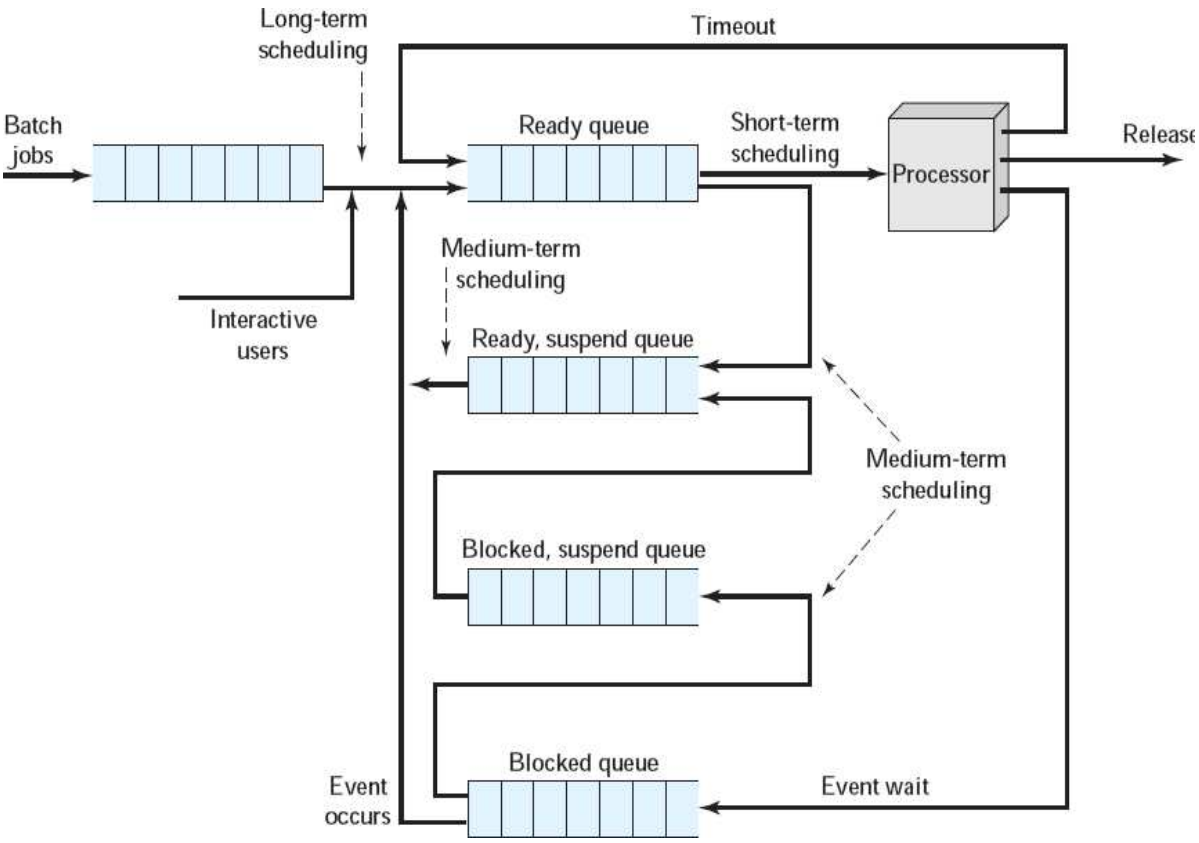

Figure 3-6 A Queuing diagram representation of process scheduler

- As processes enter the system, they are put into a **job queue (batch jobs),** which consists of all processes in the system.
- The processes that are residing in main memory and are ready and waiting to execute are kept on a list called the **ready queue** and wait there until it is selected for execution or dispatched.
- The process therefore may have to wait for the disk. The list of processes waiting for a particular I/O device is called a **device queue**. Each device has its own device queue.
- Once the process is allocated the CPU and is executing, one of several events could occur:
  - ✓ The process could issue an I/O request and then be placed in an I/O queue.
  - ✓ The process could create a new sub process and wait for the sub process's termination.
  - ✓ The process could be removed forcibly from the CPU, as a result of an interrupt, and be put back in the ready queue.

Scheduler

- Schedulers are special system software which handles process scheduling in various ways.
- Their main task is to select the jobs to be submitted into the system and to decide which process to run.
- Schedulers are of three types:
  1. Long Term Scheduler
  2. Short Term Scheduler
  3. Medium Term Scheduler

Long Term Scheduler

- It is also called job scheduler.
- Long term scheduler determines which programs are admitted to the system for processing.
- Job scheduler selects processes from the queue and loads them into memory for execution.
- Process loads into the memory for CPU scheduling. The primary objective of the job scheduler is to provide a balanced mix of jobs, such as I/O bound and processor bound.
- It also controls the degree of multiprogramming.

Atmiya University Rajkot

- If the degree of multiprogramming is stable, then the average rate of process creation must be equal to the average departure rate of processes leaving the system.
- On some systems, the long term scheduler may not be available or minimal.
- Time-sharing operating systems have no long term scheduler.
- When process changes the state from new to ready, then there is use of long term scheduler.

Short Term Scheduler

- It is also called CPU scheduler.
- Main objective is increasing system performance in accordance with the chosen set of criteria.
- It is the change of ready state to running state of the process.
- CPU scheduler selects process among the processes that are ready to execute and allocates CPU to one of them.
- Short term scheduler also known as dispatcher, execute most frequently and makes the fine grained decision of which process to execute next.
- Short term scheduler is faster than long term scheduler.

Medium Term Scheduler

- Medium term scheduling is part of the swapping.
- It removes the processes from the memory.
- It reduces the degree of multiprogramming.
- Running process may become suspended if it makes an I/O request.
- Suspended processes cannot make any progress towards completion.
- In this condition, to remove the process from memory and make space for other process, the suspended process is moved to the secondary storage.
- This process is called swapping, and the process is said to be swapped out or rolled out.
- Swapping may be necessary to improve the process mix. e of handling the swapped out-processes.

Atmiya University Rajkot

(5)What is scheduling algorithm, Types of algorithm? How it is handled a process?

- Basis on the algorithm which process execute first and which process execute last there are two types of algorithm.
- **Preemptive scheduling algorithm**:
- Preemptive Scheduling is a CPU scheduling technique that works by dividing time slots of CPU to a given process. The time slot given might be able to complete the whole process or might not be able to it.
- Currently running process may be interrupted by os and put into ready state
- Time interrupt is done then context switches is occurs
- In preemptive scheduling algorithm running process may be interrupted by high priority process with low priority process.
- **Non Preemptive scheduling algorithm**:
- in non-preemptive scheduling, any new process has to wait until the running process finishes its CPU cycle.
- A non preemptive scheduling it process scheduled request to completion state
- In non –preemptive scheduling cpu transfer one job to another when first job gets complete
- The list of pending request never contain preempted request

(5.1)What is interrupt? How it is handled by an OS?

- A software interrupt is caused either by an exceptional condition in the processor itself, or a special instruction in the instruction set which causes an interrupt when it is executed.
- The former is often called a trap or exception and is used for errors or events occurring during program execution that is exceptional enough that they cannot be handled within the program itself.
- Interrupts are a commonly used technique for process switching.
- **Two types of interrupts timer interrupt and priority interrupt**
- Associated with each I/O device class (e.g., floppy disks, hard disks etc…) there is a location (often near the bottom of memory) called the interrupt vector.
- It contains the address of the interrupt service procedure.
- Suppose that user process 3 is running when a disk interrupt occurs.
- User process 3's program counter, program status word, and possibly one or more registers are pushed onto the (current) stack by the interrupt hardware.
- The computer then jumps to the address specified in the disk interrupt vector.
- That is all the hardware does.

Atmiya University Rajkot

(5.2)What is context switching?

- Switching the CPU to another process requires saving the state of the old process and loading the saved state for the new process.
- This task is known as a context switch.
- The context of a process is represented in the PCB of a process; it includes the value of the CPU registers, the process state and memory-management information.
- When a context switch occurs, the kernel saves the context of the old process in its PCB and loads the saved context of the new process scheduled to run.
- Context-switch time is pure overhead, because the system does no useful work while switching.
- Its speed varies from machine to machine, depending on the memory speed, the number of registers that must be copied, and the existence of special instructions.

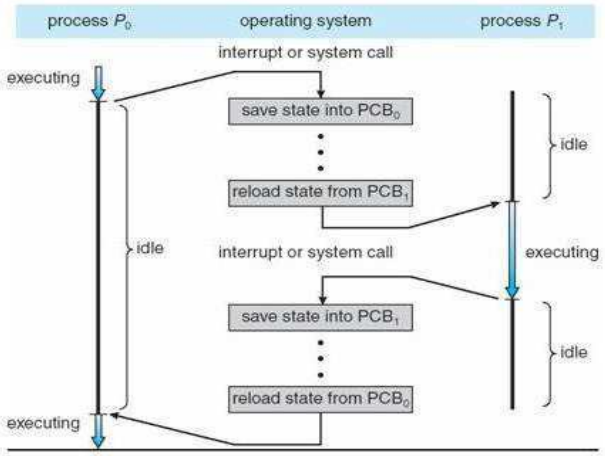

Figure 2-1. Context Switching

(5.3)Define following terms:

Race Condition

- Race condition can be defined as situation where two or more processes are reading or writing some shared data and the final result depends on who runs precisely when (their relative execution order).

Mutual Exclusion

- It is a way of making sure that if one process is using a shared variable or file; the other process will be excluded (stopped) from doing the same thing.

Turnaround Time

- Time required to complete execution of process is known as turnaround time.
- Turnaround time = Process finish time – Process arrival time.

Throughput

- Number of processes completed per time unit is called throughput.

Critical Section

- The part of program or code of segment of a process where the shared resource is accessed is called critical section.

Waiting time

- It is total time duration spent by a process waiting in ready queue.
- Waiting time = Turnaround time – Actual execution time.

Response Time

It is the time between issuing a command/request and getting output/result

(11)	*Explain FCFS, Round Robin, Shortest Job First, Shortest Remaining Job First and Priority Scheduling algorithms with illustration.*
I	<u>FCFS (First Come First Serve):</u> • **Selection criteria :** The process that request first is served first. It means that processes are served in the exact order of their arrival. • **Decision Mode :** Non preemptive: Once a process is selected, it runs until it is blocked for an I/O or some event, or it is terminated. • **Implementation:** This strategy can be easily implemented by using FIFO queue, FIFO means First In First Out. When CPU becomes free, a process from the first position in a queue is selected to run. • **Example :** Consider the following set of four processes. Their arrival time and time required to complete the execution are given in following table. Consider all time values in milliseconds.

Process	Arrival Time (T0)	Time required for completion (ΔT) (CPU Burst Time)
P0	0	10
P1	1	6
P2	3	2
P3	5	4

- **Gantt Chart :**

P0	P1	P2	P3

0 10 16 18 22

- Initially only process P0 is present and it is allowed to run. But, when P0 completes, all other processes are present. So, next process P1 from ready queue is selected and

Atmiya University Rajkot

allowed to run till it completes. This procedure is repeated till all processes completed their execution.

- **Statistics :**

Process	Arrival Time (T0)	CPU Burst Time (ΔT)	Finish Time (T1)	Turnaround Time (TAT=T1-T0)	Waiting Time (WT=TAT-ΔT)
P0	0	10	10	10	0
P1	1	6	16	15	9
P2	3	2	18	15	13
P3	5	4	22	17	13

Average Turnaround Time:	(10+15+15+17)/4	= 57/4	**= 14.25 ms.**
Average Waiting Time:	(0+9+13+13)/4	= 35/4	**= 8.75 ms.**

- **Advantages:**
  - Simple, fair, no starvation.
  - Easy to understand, easy to implement.
- **Disadvantages :**
  - Not efficient. Average waiting time is too high.
  - Convoy effect is possible. All small I/O bound processes wait for one big CPU bound process to acquire CPU.
  - CPU utilization may be less efficient especially when a CPU bound process is running with many I/O bound processes.

II <u>Shortest Job First (SJF):</u>

- **Selection Criteria :**
  The process, that requires shortest time to complete execution, is served first.
- **Decision Mode :**
  Non preemptive: Once a process is selected, it runs until either it is blocked for an I/O or some event, or it is terminated.
- **Implementation :**

Atmiya University Rajkot

This strategy can be implemented by using sorted FIFO queue. All processes in a queue are sorted in ascending order based on their required CPU bursts. When CPU becomes free, a process from the first position in a queue is selected to run.

- **Example :**
  Consider the following set of four processes. Their arrival time and time required to complete the execution are given in following table. Consider all time values in milliseconds.

Process	Arrival Time (T0)	Time required for completion (ΔT) (CPU Burst Time)
P0	0	10
P1	1	6
P2	3	2
P3	5	4

- **Gantt Chart :**

P0	P2	P3	P1

0 10 12 16 22

- Initially only process P0 is present and it is allowed to run. But, when P0 completes, all other processes are present. So, process with shortest CPU burst P2 is selected and allowed to run till it completes. Whenever more than one process is available, such type of decision is taken. This procedure us repeated till all process complete their execution.

- **Statistics :**

Process	Arrival Time (T0)	CPU Burst Time (ΔT)	Finish Time (T1)	Turnaround Time (TAT=T1-T0)	Waiting Time (Wt=TAT-ΔT)
P0	0	10	10	10	0
P1	1	6	22	21	15
P2	3	2	12	9	7

Atmiya University Rajkot

P3	5	4	16	11	7	

Average Turnaround Time:	(10+21+9+11)/4	= 51/4	**= 12.75 ms.**
Average Waiting Time:	(0+15+7+7) / 4	= 29 / 4	**= 7.25 ms.**

- **Advantages:**
  - Less waiting time.
  - Good response for short processes.
- **Disadvantages :**
  - It is difficult to estimate time required to complete execution.
  - Starvation is possible for long process. Long process may wait forever.

III <u>Shortest Remaining Time Next (SRTN):</u>

- **Selection criteria :**
  The process, whose remaining run time is shortest, is served first. This is a preemptive version of SJF scheduling.
- **Decision Mode:**
  Preemptive: When a new process arrives, its total time is compared to the current process remaining run time. If the new job needs less time to finish than the current process, the current process is suspended and the new job is started.
- **Implementation :**
  This strategy can also be implemented by using sorted FIFO queue. All processes in a queue are sorted in ascending order on their remaining run time. When CPU becomes free, a process from the first position in a queue is selected to run.
- **Example :**
  Consider the following set of four processes. Their arrival time and time required to complete the execution are given in following table. Consider all time values in milliseconds.

Process	Arrival Time (T0)	Time required for completion (ΔT) (CPU Burst Time)
P0	0	10
P1	1	6

Atmiya University Rajkot

P2	3	2	
P3	5	4	

- **Gantt Chart :**

P0	P1	P2	P1	P3	P0

0 1 3 5 9 13 22

- Initially only process P0 is present and it is allowed to run. But, when P1 comes, it has shortest remaining run time. So, P0 is preempted and P1 is allowed to run. Whenever new process comes or current process blocks, such type of decision is taken. This procedure is repeated till all processes complete their execution.

- **Statistics :**

Process	Arrival time (T0)	Completion Time (ΔT)	Finish Time (T1)	Turnaround Time (TAT=T1-T0)	Waiting Time (WT=TAT-ΔT)
P0	0	10	22	22	12
P1	1	6	9	8	2
P2	3	2	5	2	0
P3	5	4	13	8	4

Average Turnaround Time:	(22+8+2+8) / 4	= 40/4	**= 10 ms.**
Average Waiting Time:	(12+2+0+4)/4	= 18 / 4	**= 4.5 ms.**

- **Advantages :**
  - Less waiting time.
  - Quite good response for short processes.
- **Disadvantages :**
  - Again it is difficult to estimate remaining time necessary to complete execution.
  - Starvation is possible for long process. Long process may wait forever.
  - Context switch overhead is there.

Atmiya University Rajkot

IV

Round Robin:

- **Selection Criteria:**
- Each selected process is assigned a time interval, called time quantum or time slice. Process is allowed to run only for this time interval. Here, two things are possible: First, Process is either blocked or terminated before the quantum has elapsed. In this case the CPU switching is done and another process is scheduled to run. Second, Process needs CPU burst longer than time quantum. In this case, process is running at the end of the time quantum. Now, it will be preempted and moved to the end of the queue. CPU will be allocated to another process. Here, length of time quantum is critical to determine.
- **Decision Mode:**

  Preemptive:
- **Implementation :**

  This strategy can be implemented by using circular FIFO queue. If any process comes, or process releases CPU, or process is preempted. It is moved to the end of the queue. When CPU becomes free, a process from the first position in a queue is selected to run.

- **Example :**

  Consider the following set of four processes. Their arrival time and time required to complete the execution are given in the following table. All time values are in milliseconds. Consider that time quantum is of 4 ms, and context switch overhead is of 1 ms.

Process	Arrival Time (T0)	Time required for completion (ΔT)
P0	0	10
P1	1	6
P2	3	2
P3	5	4

- **Gantt Chart :**

P0		**P1**		**P2**		**P0**		**P3**		**P1**		**P0**

Atmiya University Rajkot

0 4 5 9 10 12 13 17 18 22 23 25 26 28

- At 4ms, process P0 completes its time quantum. So it preempted and another process P1 is allowed to run. At 12 ms, process P2 voluntarily releases CPU, and another process is selected to run. 1 ms is wasted on each context switch as overhead. This procedure is repeated till all process completes their execution.

- **Statistics:**

Process	Arrival time (T0)	Completion Time (ΔT)	Finish Time (T1)	Turnaround Time (TAT=T1-T0)	Waiting Time (WT=TAT-ΔT)
P0	0	10	28	28	18
P1	1	6	25	24	18
P2	3	2	12	9	7
P3	5	4	22	17	13

Average Turnaround Time:	(28+24+9+17)/4	= 78 / 4	= 19.5 ms
Average Waiting Time:	(18+18+7+13)/4	= 56 / 4	= 14 ms

- **Advantages:**
  - One of the oldest, simplest, fairest and most widely used algorithms.
- **Disadvantages:**
  - Context switch overhead is there.
  - Determination of time quantum is too critical. If it is too short, it causes frequent context switches and lowers CPU efficiency. If it is too long, it causes poor response for short interactive process.

V <u>Non Preemptive Priority Scheduling:</u>

- **Selection criteria :**
  The process, that has highest priority, is served first.
- **Decision Mode:**
  Non Preemptive: Once a process is selected, it runs until it blocks for an I/O or some event, or it terminates.

Atmiya University Rajkot

- **Implementation :**
  This strategy can be implemented by using sorted FIFO queue. All processes in a queue are sorted based on their priority with highest priority process at front end. When CPU becomes free, a process from the first position in a queue is selected to run.
- **Example :**
  Consider the following set of four processes. Their arrival time, total time required completing the execution and priorities are given in following table. Consider all time values in millisecond and small values for priority means higher priority of a process.

Process	Arrival Time (T0)	Time required for completion (ΔT)	Priority
P0	0	10	5
P1	1	6	4
P2	3	2	2
P3	5	4	0

Here, process priorities are in this order: P3 > P2 > P1 > P0.

- **Gantt Chart :**

P0	P3	P2	P1

0 10 14 16 22

- Initially only process P0 is present and it is allowed to run. But, when P0 completes, all other processes are present. So, process with highest priority P3 is selected and allowed to run till it completes. This procedure is repeated till all processes complete their execution.
- **Statistics :**

Process	Arrival time (T0)	Completion Time (ΔT)	Finish Time (T1)	Turnaround Time (TAT=T1-T0)	Waiting Time (TAT-ΔT)
P0	0	10	10	10	0
P1	1	6	22	21	15
P2	3	2	16	13	11
P3	5	4	14	9	5

Average Turnaround Time:	(10+21+13+9) / 4	= 53 / 4	= 13.25 ms

Atmiya University Rajkot

	Average Waiting Time:	(0+15+11+5) / 4	= 31 / 4	= 7.75 ms	

- **Advantages:**
  - Priority is considered. Critical processes can get even better response time.
- **Disadvantages:**
  - Starvation is possible for low priority processes. It can be overcome by using technique called 'Aging'.
  - Aging*:* gradually increases the priority of processes that wait in the system for a long time.

<u>Preemptive Priority Scheduling:</u>

- **Selection criteria :**
  The process, that has highest priority, is served first.
- **Decision Mode:**
  Preemptive: When a new process arrives, its priority is compared with current process priority. If the new job has higher priority than the current, the current process is suspended and new job is started.
- **Implementation :**
  This strategy can be implemented by using sorted FIFO queue. All processes in a queue are sorted based on priority with highest priority process at front end. When CPU becomes free, a process from the first position in a queue is selected to run.
- **Example :**
  Consider the following set of four processes. Their arrival time, time required completing the execution and priorities are given in following table. Consider all time values in milliseconds and small value of priority means higher priority of the process.

Process	Arrival Time (T0)	Time required for completion (ΔT)	Priority
P0	0	10	5
P1	1	6	4
P2	3	2	2
P3	5	4	0

Here process priorities are in this order: P3>P2>P1>P0

Atmiya University Rajkot

- **Gantt chart:**

P0	P1	P2	P3	P1	P0

0 1 3 5 9 13 22

- Initially only process P0 is present and it is allowed to run. But when P1 comes, it has higher priority. So, P0 is preempted and P1 is allowed to run. This process is repeated till all processes complete their execution.

- **Statistics:**

Process	Arrival time (T0)	Completion Time (ΔT)	Finish Time (T1)	Turnaround Time (TAT=T1-T0)	Waiting Time (TAT-ΔT)
P0	0	10	22	22	12
P1	1	6	13	12	6
P2	3	2	5	2	0
P3	5	4	9	4	0

Average Turnaround Time:	(22+12+2+4) / 4	= 40 / 4	= 10 ms
Average Waiting Time:	(12+6+0+0) / 4	= 18 / 4	= 4.5 ms

- **Advantages:**
  - Priority is considered. Critical processes can get even better response time.
- **Disadvantages:**
  - Starvation is possible for low priority processes. It can be overcome by using technique called 'Aging'.
  - Aging: gradually increases the priority of processes that wait in the system for a long time.
  - Context switch overhead is there.

Atmiya University Rajkot

(2) Five batch jobs A to E arrive at same time. They have estimated running times 10,6,2,4 and 8 minutes. Their priorities are 3,5,2,1 and 4 respectively with 5 being highest priority. For each of the following algorithm determine mean process turnaround time. Ignore process swapping overhead.

Round Robin, Priority Scheduling, FCFS, SJF.

Process	Running Time Time required for completion (ΔT)	Priority
A	10	3
B	6	5
C	2	2
D	4	1
E	8	4

First Come First Served:

A	B	C	D	E

0 10 16 18 22 30

Process	Arrival time (T0)	Completion Time (ΔT)	Finish Time (T1)	Turnaround Time (TAT=T1-T0)	Waiting Time (TAT-ΔT)
A	0	10	10	10	0
B	0	6	16	16	10
C	0	2	18	18	16
D	0	4	22	22	18
E	0	8	30	30	22

Average Turnaround Time:	(10+16+18+22+30) / 5	= 96 / 5	= 19.2 ms
Average Waiting Time:	(0+10+16+18+22) / 5	= 56 / 5	= 13.2 ms

Atmiya University Rajkot

Shortest Job First:

C	D	B	E	A

0 2 6 12 20 30

Process	Arrival time (T0)	Completion Time (ΔT)	Finish Time (T1)	Turnaround Time (TAT=T1-T0)	Waiting Time (TAT-ΔT)
A	0	10	30	30	20
B	0	6	12	12	6
C	0	2	2	2	0
D	0	4	6	6	2
E	0	8	20	20	12

Average Turnaround Time:	(30+12+2+6+20) / 5	= 70 / 5	= 14 ms
Average Waiting Time:	(20+6+0+2+12) / 5	= 40 / 5	= 8 ms

Priority:

B	E	A	C	D

0 6 14 24 26 30

Process	Arrival time (T0)	Completion Time (ΔT)	Finish Time (T1)	Turnaround Time (TAT=T1-T0)	Waiting Time (TAT-ΔT)
A	0	10	24	24	14
B	0	6	6	6	0
C	0	2	26	26	24
D	0	4	30	30	26
E	0	8	14	14	6

Average Turnaround Time:	(24+6+26+30+14) / 5	= 100 / 5	= 20 ms

Atmiya University Rajkot

Average Waiting Time:	(14+0+24+26+6) / 5	= 70 / 5	= 14 ms	

Round Robin:

Time slice OR Quantum time= 2min.

A	B	C	D	E	A	B	D	E	A	B	E	A	E	A

0 2 4 6 8 10 12 14 16 18 20 22 24 26 28 30

Process	Arrival time (T0)	Completion Time (ΔT)	Finish Time (T1)	Turnaround Time (TAT=T1-T0)	Waiting Time (TAT-ΔT)
A	0	10	30	30	20
B	0	6	22	22	16
C	0	2	6	6	4
D	0	4	16	16	12
E	0	8	28	28	20

Average Turnaround Time:	(30+22+6+16+28) / 5	= 102 / 5	= 20.4 ms
Average Waiting Time:	(20+16+4+12+20) / 5	= 72 / 5	= 14.4 ms

(3) Suppose that the following processes arrive for the execution at the times indicated. Each process will run the listed amount of time. Assume preemptive scheduling.

Process	Arrival Time (ms)	Burst Time (ms)
P1	0.0	8
P2	0.4	4
P3	1.0	1

What is the turnaround time for these processes with Shortest Job First scheduling algorithm?

Atmiya University Rajkot

(4)	Consider the following set of processes with length of CPU burst time given in milliseconds. Process Burst Time Priority P1 10 3 P2 1 1 P3 2 3 P4 1 4 P5 5 2 Assume arrival order is: P1, P2, P3, P4, P5 all at time 0 and a smaller priority number implies a higher priority. Draw the Gantt charts illustrating the execution of these processes using preemptive priority scheduling.

Atmiya University Rajkot

(1) Compare multiprogramming with fixed partition & multiprogramming with variable partition with diagram. OR

Explain swapping in memory management.

Swapping

- In practice total amount of memory needed by all the processes is often much more than the available memory.
- Swapping is used to deal with memory overhead.
- **Swapping** consists of bringing in each process in its entirety, running it for a while, then putting it back on the disk.
- The event of copying process from hard disk to main memory is called as **Swapped-in**.
- The event of copying process from main memory to hard disk is called as **Swapped-out**.
- When swapping creates multiple holes in memory, it is possible to combine them all into one big one by moving all the processes downward as far as possible. This technique is called as **memory compaction.**
- Two ways to implement Swapping System
  - Multiprogramming with Fixed partitions.
  - Multiprogramming with dynamic partitions.

Multiprogramming with Fixed partitions

- This method allows multiple processes to execute simultaneously.
- Here memory is divided into fixed sized partitions. Size can be equal or unequal for different partitions.
- Generally unequal partitions are used for better utilizations.
- Each partition can accommodate exactly one process, means only single process can be placed in one partition.
- The partition boundaries are not movable.
- Whenever any program needs to be loaded in memory, a free partition big enough to hold the program is found. This partition will be allocated to that program or process.
- If there is no free partition available of required size, then the process needs to wait. Such process will be put in a queue.
- There are two ways to maintain queue
  - Using multiple Input Queues.
  - Using single Input Queue.

Atmiya University Rajkot

- The disadvantage of sorting the incoming jobs into separate queues becomes apparent when the queue for a large partition is empty but the queue for a small partition is full, as is the case for partitions 1 and 3 in Fig. 5-1(a).
- Here small jobs have to wait to get into memory, even though plenty of memory is free. An alternative organization is to maintain a single queue as in Fig. 5-1(b). Whenever a partition becomes free, the job closest to the front of the queue that fits in it could be loaded into the empty partition and run.

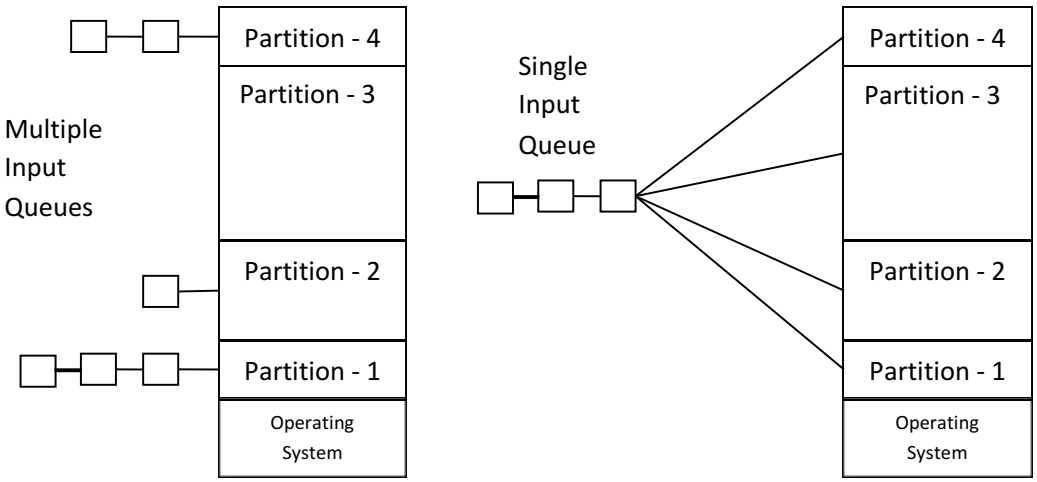

Figure 5-1. (a) Fixed memory partitions with separate input queues for each partition. (b) Fixed memory partitions with a single input queue.

Multiprogramming with dynamic partitions

- This method also allows multiple processes to execute simultaneously.
- Here, memory is shared among operating system and various simultaneously running processes.
- <u>Memory is not divided into any fixed partitions. Also the number of partitions is not fixed. Process is allocated exactly as much memory as it requires.</u>
- Initially, the entire available memory is treated as a single free partition.
- Whenever any process enters in a system, a chunk of free memory big enough to fit the process is found and allocated. The remaining unoccupied space is treated as another free partition.
- If enough free memory is not available to fit the process, process needs to wait until required memory becomes available.

Atmiya University Rajkot

- Whenever any process gets terminate, it releases the space occupied. If the released free space is contiguous to another free partition, both the free partitions are merged together in to single free partition.
- Better utilization of memory than fixed sized size partition.
- This method suffers from **External fragmentation**.

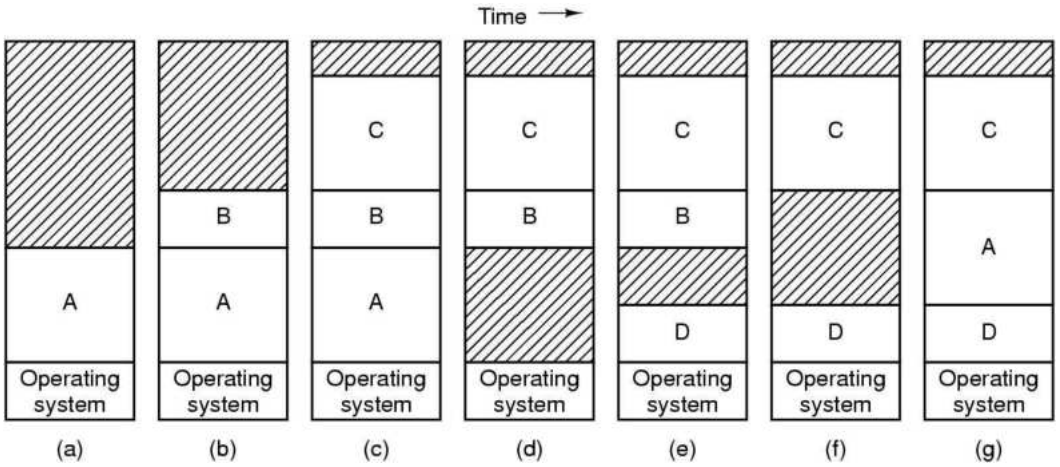

Figure 5-2. Memory allocation changes as processes come into memory and leave it. The shaded regions are unused memory.

(2) Explain memory management with Linked list and Bit maps.

- When memory is assigned dynamically, the operating system must manage it.
- In general there are two ways to keep track of memory usage.
  - Memory Management with Bitmap.
  - Memory Management with Linked List.

Memory Management with Bitmap

- With bitmap, memory is divided into allocation units.
- Corresponding to each allocation unit there is a bit in a bitmap.
- Bit is 0 if the unit is free.
- Bit is 1 if unit is occupied.
- The size of allocation unit is an important design issue, the smaller the size, the larger the bitmap.
- The main problem is that when it has been decided to bring a k unit process, the memory manager must search the bitmap to find a run of k consecutive 0 bits in the

map.

- Searching a bitmap for a run of a given length is a slow operation.
- Figure 5-3 shows part of memory and the corresponding bitmap.

Memory Management with Linked List

- Another way to keep track of memory is to maintain a linked list of allocated and free memory segments, where segment either contains a process or is an empty hole between two processes.
- The memory of Fig. 5-3(a) is represented in Fig. 5-3(c) as a linked list of segments.
- Each entry in the list specifies a hole (H) or process (P), the address at which it starts the length and a pointer to the next entry.

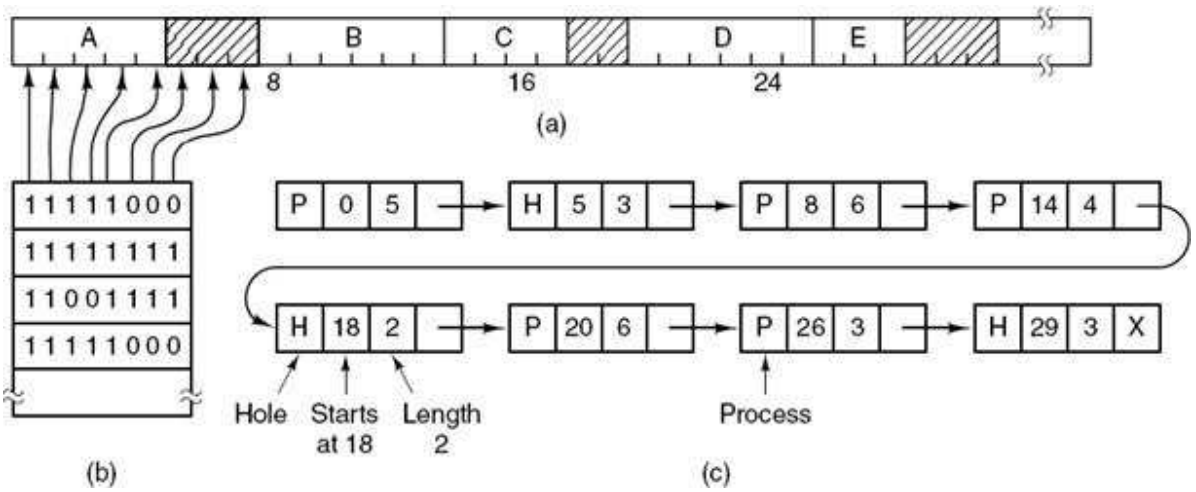

Figure 5-3. (a) A part of memory with five processes and three holes. The tick marks show the memory allocation units. The shaded regions (0 in the bitmap) are free. (b) The corresponding bitmap. (c) The same information as a list.

- The segment list is kept sorted by address. Sorting this way has the advantage that when a process terminates or is swapped out, updating the list is straightforward.
- A terminating process normally has two neighbors (except when it is at the very top or bottom of memory).
- These may be either processes or holes, leading to the four combinations of Fig. 5-4. In Fig. 5-4(a) updating the list requires replacing a P by an H. In Fig. 5-4(b) and Fig. 5-4(c) two entries are merged into one, and the list becomes one entry shorter.
- In Fig. 5-4(d), three entries are merged and two items are removed from the list.

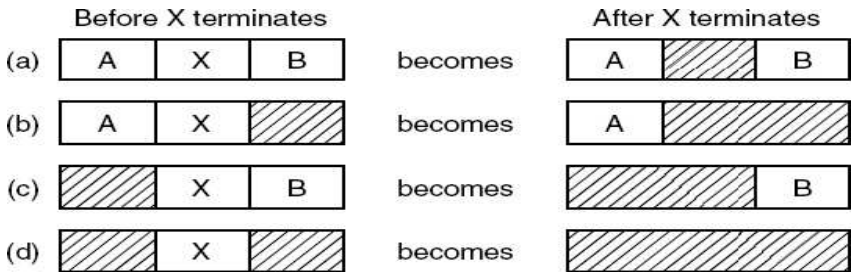

Figure 5-4. Four neighbor combinations for the terminating process *X*.

(3) Given memory partition of 100K, 500K, 200K, 300K, and 600K in order, how would each of the First-fit, Next fit, Best-fit and Worst-fit algorithms place the processes of 212K, 417K, 112K and 426K in order? Which algorithm makes the most efficient use of memory? Show the diagram of memory status in each case.

Given memory Partition is as shown below.

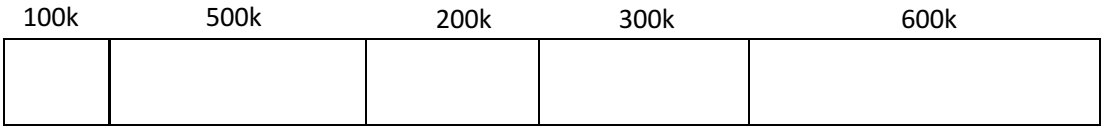

First Fit:

- Search Starts from the starting location of the memory.
- First available hole that is large enough to hold the process is selected for allocation.
- The hole is then broken up into two pieces, one for process and another for unused memory.
- Search time is smaller here.
- Memory loss is higher, as very large hole may be selected for small process.
- Here process of size 426k will not get any partition for allocation.

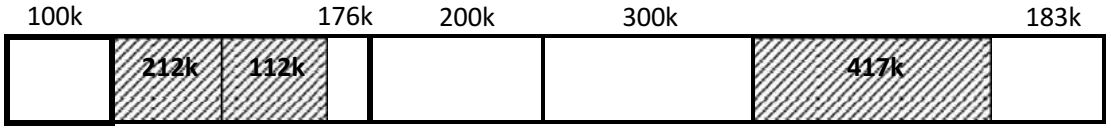

Next Fit:

- Next fit is minor variation of first fit algorithm.
- It works in the same way as first fit, except that it keeps the track of where it is whenever it finds a suitable hole.
- The next time when it is called to find a hole, it starts searching the list from the place where it left off last time.
- Search time is smaller here.
- Here process of size 426k will not get any partition for allocation.

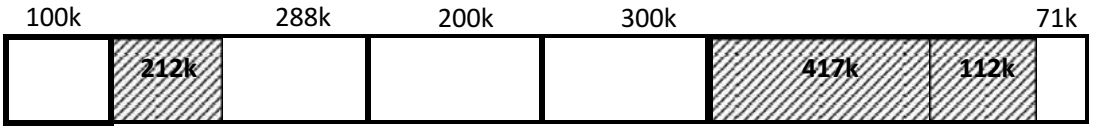

Best Fit

- Entire memory is searched here.
- The smallest hole, which is large enough to hold the process, is selected for allocation.
- Search time is high, as it searches entire memory.
- Memory loss is less. More sensitive to external fragmentation, as it leaves tiny holes into which no process can fit.

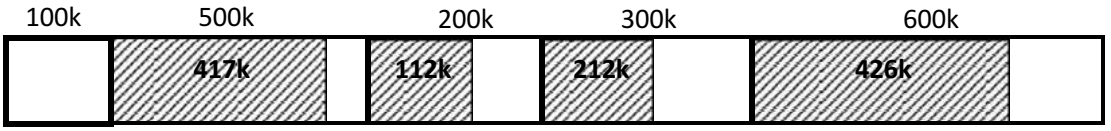

Worst Fit

- Entire memory is searched here also. The largest hole, which is largest enough to hold the process, is selected for allocation.
- This algorithm can be used only with dynamic partitioning.
- Here process of size 426k will not get any partition for allocation.

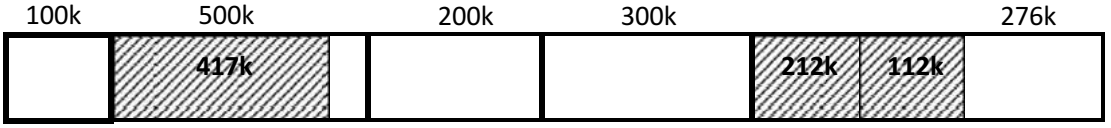

Best fit algorithm gives the efficient allocation of memory.

(4) What is Virtual Memory? Explain.

- The basic idea behind virtual memory is that each program has its own address space, which is broken up into pages.
- Each page is a contiguous range of addresses.
- These pages are mapped onto the physical memory but, to run the program, all pages are not required to be present in the physical memory.
- The operating system keeps those parts of the program currently in use in main memory, and the rest on the disk.
- Virtual memory works fine in a multiprogramming system, with bits and pieces of many programs in memory at once.
- While a program is waiting for part of itself to be brought in, it is waiting for I/O and cannot run, so the CPU can be given to another process.
- In a system using virtual memory, the physical memory is divided into page frames and the virtual address space is divided in into equally-sized partitions called pages.

(5) What is paging? Explain the conversion of virtual address in paging with example.

Paging

- The program generated address is called as **Virtual Addresses** and form the **Virtual Address Space**.
- Most virtual memory systems use a technique called **paging**.
- Virtual address space is divided into fixed-size partitions called **pages**.
- The corresponding units in the physical memory are called as **page frames**.
- The pages and page frames are always of the same size.
- Size of Virtual Address Space is greater than that of Main memory, so instead of loading entire address space in to memory to run the process, MMU copies only required pages into main memory.
- In order to keep the track of pages and page frames, OS maintains a data structure called page table.

The conversion of virtual address to physical address

- When virtual memory is used, the virtual address is presented to an **MMU (Memory Management Unit)** that maps the virtual addresses onto the physical memory addresses.
- A very simple example of how this mapping works is shown in Fig. 5-6.
- In this example, we have a computer generated 16-bit addresses, from 0 up to 64K. These are the virtual addresses.

Atmiya University Rajkot

- However, only 32 KB of physical memory is available, so although 64-KB programs can be written, they cannot be loaded in to memory in their entirety and run.
- A complete copy of a program's core image, up to 64 KB, must be present on the disk. Only required pages are loaded in the physical memory.

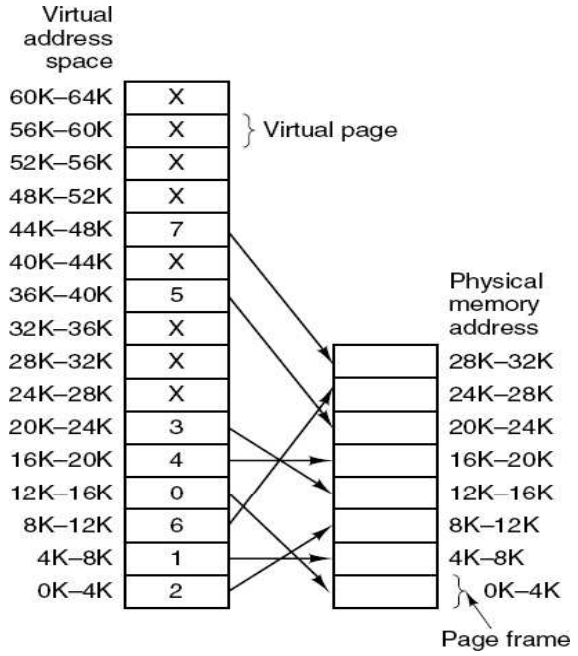

Figure 5-5. The relation between virtual addresses and physical memory addresses is given by the page table.

- With 64 KB of virtual address space and 32 KB of physical memory, we get 16 virtual pages and 8 page frames.
- Transfers between RAM and disk are always in units of a page.
- The virtual address is split into a virtual page number (high order bits) and an offset (low-order bits).
- With a 16-bit address and a 4 - KB page size, the upper 4 bits could specify one of the 16 virtual pages and the lower 12 bits would then specify the byte offset (0 to 4095) within the selected page.
- The virtual page number is used as an index into the Page table.
- If the present/absent bit is 0, it is page-fault; a trap to the operating system is caused to bring required page into main memory.
- If the present/absent bit is 1, required page is there with main memory and page

frame number found in the page table is copied to the higher order bit of the output register along with the offset.

- Together Page frame number and offset creates physical address. Physical Address = Page frame Number + offset of virtual address.

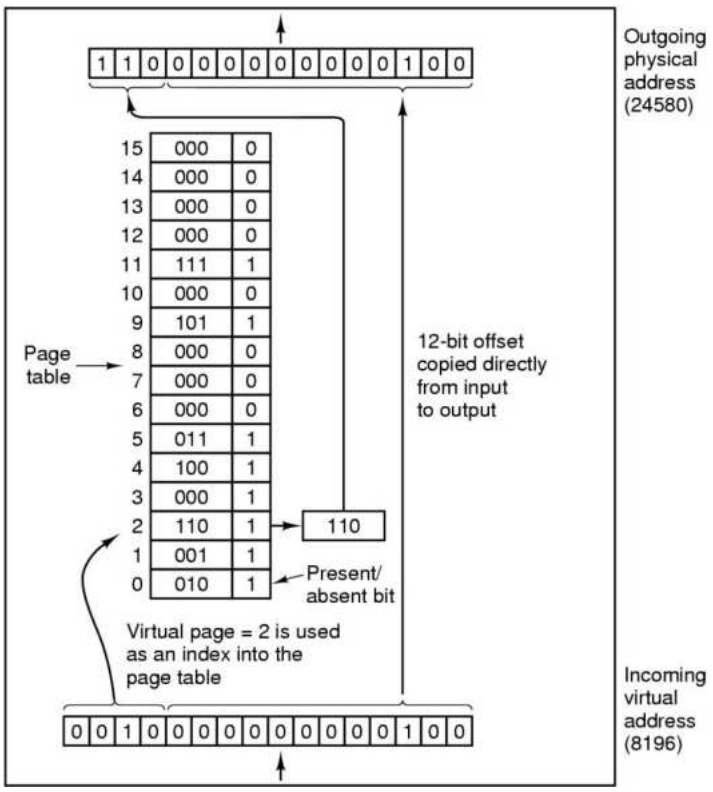

Figure 5-6. The internal operation of the MMU with 16 4-KB pages.

(6) Explain page table in brief. <u>OR</u>

Explain Structure of Page Table.

Page Table

- **<u>Page table</u>** <u>is a data structure which translates virtual address into equivalent physical address.</u>
- The virtual page number is used as an index into the Page table to find the entry for that virtual page and from the Page table physical page frame number is found.
- Thus the purpose of page table is to map virtual pages onto page frames.
- Typical fields of page table are Page frame number, Present / absent bit, Protection

bits, Modified field, Referenced field, Cashing disabled field etc…

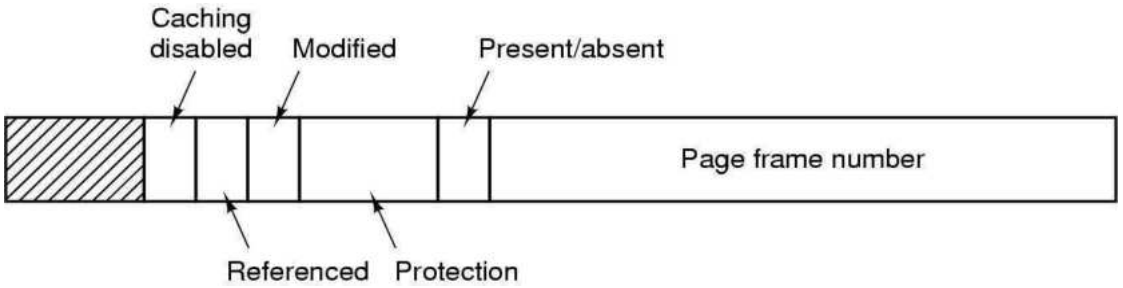

Figure 5-7. A typical page table entry

- Different fields of typical page table are as below
- **Page frame Number:** This field shows the corresponding physical page frame number for a particular virtual page.
- **Present/Absent bit:** If this bit is 1, the entry is valid and can be used, if it is 0 the virtual page to which the entry belongs is not currently in memory. Accessing page table entry with this bit set to 0 causes a page fault.
- **The Protection bits:** This tells what kind of access is permitted. In the simplest form, this field contains 1 bit, with 0 for read/write and 1 for read only.
- **Modified bit:** When a page is written to, the hardware sets the modified bit. If the page in memory has been modified, it must be written back to disk. This bit is also called as dirty bit as it reflects the page's state.
- **Referenced bit:** A references bit is set whenever a page is referenced, either for reading or writing. Its value helps operating system in page replacement algorithm.
- **Cashing Disabled bit:** This feature is important for pages that maps onto device registers rather than memory. With this bit cashing can be turned off.

(7) Explain Following Terms.

Demand Paging

- In paging system, processes are started up with none of their pages in memory.
- When CPU tries to fetch the first instruction, it gets page fault, other page faults for global variables and stack usually follow quickly.
- After a while, the process has most of the pages it needs in main memory and it has few page faults.

Atmiya University Rajkot

- This strategy is called **demand paging** because pages are loaded only on demand, not in advance.

Working Set

- The set of pages that a process is currently using is known as **working set.**

Thrashing

- A program causing page faults every few instructions is said to be **thrashing.**

Pre-paging

- Many paging systems try to keep track of each process'working set and make sure that it is in memory before letting the process run.
- Loading pages before allowing processes to run is called **pre-paging.**

(8) Explain the various page replacement strategies.

Various page replacement strategies are explained below.

Optimal Page Replacement Algorithm

- The moment a page fault occurs, some set of pages will be in the memory.
- One of these pages will be referenced on the very next instruction.
- Other pages may not be referenced until 10, 100, or perhaps 1000 instructions later.
- Each page can be labeled with the number of instructions that will be executed before that page is first referenced.
- The optimal page algorithm simply says that the page with the highest label should be removed.
- The only problem with this algorithm is that it is unrealizable.
- At the time of the page fault, the operating system has no way of knowing when each of the pages will be referenced next.

FIFO Page replacement Algorithm

- The first in first out page replacement algorithm is the simplest page replacement algorithm.
- The operating system maintains a list of all pages currently in memory, with the most recently arrived page at the tail and least recent at the head.
- On a page fault, the page at head is removed and the new page is added to the tail.
- When a page replacement is required the oldest page in memory needs to be replaced.
- The performance of the FIFO algorithm is not always good because it may happen

Atmiya University Rajkot

that the page which is the oldest is frequently referred by OS.

- Hence removing the oldest page may create page fault again.

The Second Chance Page Replacement Algorithm

- A simple modification to FIFO that avoids the problem of throwing out a heavily used page is to inspect the *R* bit of the oldest page.
- If it is 0, the page is both old and unused, so it is replaced immediately. If the *R* bit is 1, the bit is cleared, the page is put onto the end of the list of pages, and its load time is updated as though it had just arrived in memory. Then the search continues.
- The operation of this algorithm is called **second chance.**
- What second chance is doing is looking for an old page that has not been referenced in the previous clock interval. If all the pages have been referenced, second chance degenerates into pure FIFO.

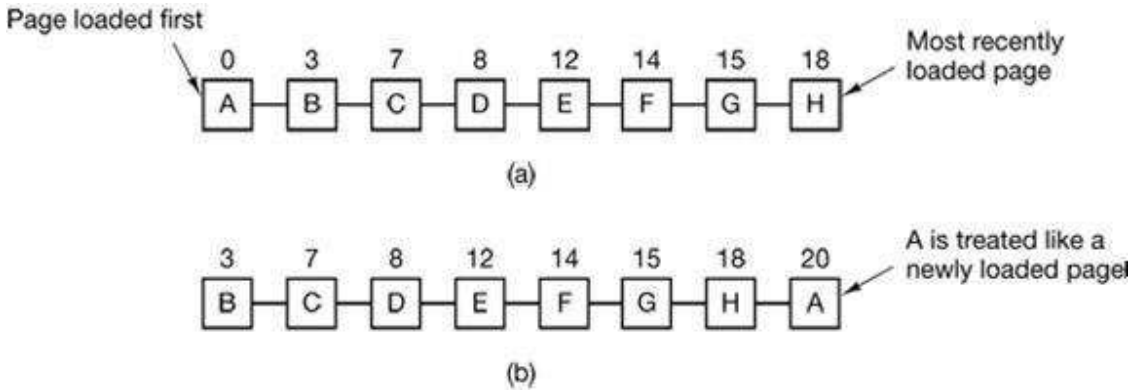

Figure 5-8. Operation of second chance. (a) Pages sorted in FIFO order. (b) Page list if a page fault occurs at time 20 and *A* has its *R* bit set. The numbers above the pages are their loading times.

The Clock Page Replacement Algorithm

- Although second chance is a reasonable algorithm, it is unnecessarily inefficient because it is constantly moving pages around on its list.
- A better approach is to keep all the page frames on a circular list in the form of a clock, as shown in Fig. 5-9.
- A hand points to the oldest page.
- When a page fault occurs, the page being pointed to by the hand is inspected.

Atmiya University Rajkot

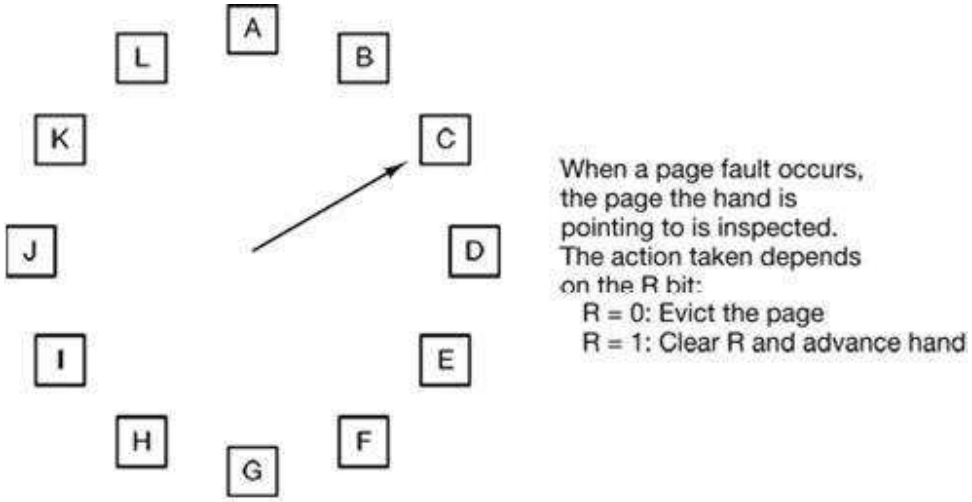

Figure 5-9. The clock page replacement algorithm.

- If its *R* bit is 0, the page is evicted, the new page is inserted into the clock in its place, and the hand is advanced one position. If *R* is 1, it is cleared and the hand is advanced to the next page.
- This process is repeated until a page is found with *R* = 0. Not surprisingly, this algorithm is called **clock.**
- It differs from second chance only in the implementation.

LRU (Least Recently Used) Page Replacement Algorithm

- A good approximation to the optimal algorithm is based on the observation that <u>pages that have been heavily used in last few instructions will probably be heavily used again in next few instructions.</u>
- When page fault occurs, throw out the page that has been used for the longest time. This strategy is called LRU (Least Recently Used) paging.
- To fully implement LRU, it is necessary to maintain a linked list of all pages in memory, with the most recently used page at the front and the least recently used page at the rear.
- The list must be updated on every memory reference.
- Finding a page in the list, deleting it, and then moving it to the front is a very time consuming operations.
- There are other ways to implement LRU with special hardware.
- For a machine with *n* page frames, the LRU hardware can maintain a matrix of $n \times n$ bits, initially all zero.

- Whenever page frame *k* is referenced, the hardware first sets all the bits of row *k* to 1, and then sets all the bits of column *k* to 0.
- At any instant, the row whose binary value is lowest is the least recently used; the row whose value is next lowest is next least recently used, and so forth.
- The workings of this algorithm are given in Fig. 5-11 for four page frames and page references in the order 0 1 2 3 2 1 0 3 2 3.
- After page 0 is referenced, we have the situation of Fig. 5-11(a).
- After page 1 is reference, we have the situation of Fig. 5-11(b), and so forth.
- As shown in Fig. 5-11(j), if page fault occurs at that moment, the page from the page frame 1 with lowest binary value will be replaced.

(a)

	Page 0	1	2	3
0	0	1	1	1
1	0	0	0	0
2	0	0	0	0
3	0	0	0	0

(b)

Page 0	1	2	3
0	0	1	1
1	0	1	1
0	0	0	0
0	0	0	0

(c)

Page 0	1	2	3
0	0	0	1
1	0	0	1
1	1	0	1
0	0	0	0

(d)

Page 0	1	2	3
0	0	0	0
1	0	0	0
1	1	0	0
1	1	1	0

(e)

Page 0	1	2	3
0	0	0	0
1	0	0	0
1	1	0	1
1	1	0	0

(f)

0	0	0	0
1	0	1	1
1	0	0	1
1	0	0	0

(g)

0	1	1	1
0	0	1	1
0	0	0	1
0	0	0	0

(h)

0	1	1	0
0	0	1	0
0	0	0	0
1	1	1	0

(i)

0	1	0	0
0	0	0	0
1	1	0	1
1	1	0	0

(j)

0	1	0	0
0	0	0	0
1	1	0	0
1	1	1	0

Figure 5-11. LRU using a matrix when pages are referenced in the order 0, 1, 2, 3, 2, 1, 0, 3, 2, 3.

NRU (Not Recently Used)

- NRU makes approximation to replace the page based on R and M bits.
- When a process is started up, both page bits for all pages are set to 0 by operating system.
- Periodically, the R bit is cleared, to distinguish pages that have not been referenced recently from those that have been.

Atmiya University Rajkot

- When page fault occurs, the operating system inspects all the pages and divide them into 4 categories based on current values of their R and M bits
  - Case 0 : not referenced, not modified
  - Case 1 : not referenced, modified
  - Case 2 : referenced, not modified
  - Case 3 : referenced, modified
- The NRU (Not Recently Used) algorithm removes a page at random from the lowest numbered nonempty class.
- In given example,
  - Page-0 is of class-2 (referenced, not modified)
  - Page-1 is of class-1 (not referenced, modified)
  - Page-2 is of class-0 (not referenced, not modified)
  - Page-3 is of class-3 (referenced, modified)

So lowest class page-2 needs to be replaced by NRU.

(9) Compare optimal, LRU and FIFO page replacement algorithms with illustration.
OR
For the Page Reference String: 7, 0, 1, 2, 0, 3, 0, 4, 2, 3, 0, 3, 2, 1, 2, 0, 1, 7, 0, 1 Calculate the Page Faults applying (i) Optimal (ii) LRU and (iii) FIFO, Page Replacement Algorithms for a Memory with three frames.

Optimal Page Replacement Algorithm

- The moment a page fault occurs, some set of pages will be in the memory.
- One of these pages will be referenced on the very next instruction (the page containing that instruction).
- Other pages may not be referenced until 10, 100, or perhaps 1000 instructions later. Each page can be labeled with the number of instructions that will be executed before that page is first referenced.
- The optimal page algorithm simply says that the page with the highest label should be removed.
- If one page will not be used for 8 million instructions and another page will not be used for 6 million instructions, removing the former pushes the page fault that will fetch it back as far into the future as possible.
- The only problem with this algorithm is that it is unrealizable.
- At the time of the page fault, the operating system has no way of knowing when each of the pages will be referenced next.

Atmiya University Rajkot

FIFO Page replacement Algorithm

- The first in first out page replacement algorithm is the simplest page replacement algorithm.
- The operating system maintains a list of all pages currently in memory, with the most recent arrived page at the tail and least recent at the head.
- On a page fault, the page at head is removed and the new page is added to the tail.
- When a page replacement is required the oldest page in memory needs to be replaced.
- The performance of the FIFO algorithm is not always good because it may happen that the page which is the oldest is frequently referred by OS.
- Hence removing the oldest page may create page fault again.

Page Requests	**7**	**0**	**1**	**2**	**0**	**3**	**0**	**4**	**2**	**3**	**0**	**3**	**2**	**1**	**2**	**0**	**1**	**7**	**0**	**1**
Frame 1	7	7	7	2	2	2	2	4	4	4	0	0	0	0	0	0	0	7	7	7
Frame 2		0	0	0	0	3	3	3	2	2	2	2	2	1	1	1	1	1	0	0
Frame 3			1	1	1	1	0	0	0	3	3	3	3	3	2	2	2	2	2	1
Page Faults (15)	F	F	F	F		F	F	F	F	F	F			F	F			F	F	F

LRU (Least Recently Used) Page Replacement Algorithm

- A good approximation to the optimal algorithm is based on the observation that pages that have been heavily used in last few instructions will probably be heavily used again in next few instructions.
- When page fault occurs, throw out the page that has been used for the longest time. This strategy is called LRU (Least Recently Used) paging.

Page Requests	**7**	**0**	**1**	**2**	**0**	**3**	**0**	**4**	**2**	**3**	**0**	**3**	**2**	**1**	**2**	**0**	**1**	**7**	**0**	**1**
Frame 1	7	7	7	2	2	2	2	4	4	4	0	0	0	1	1	1	1	1	1	1
Frame 2		0	0	0	0	0	0	0	0	3	3	3	3	3	3	0	0	0	0	0
Frame 3			1	1	1	3	3	3	2	2	2	2	2	2	2	2	2	7	7	7
Page Faults (12)	F	F	F	F		F		F	F	F	F			F		F		F		

(10) A computer has four page frames. The time of loading, time of last access and the

Atmiya University Rajkot

R and M bit for each page given below. Which page NRU, FIFO, LRU will replace.

Page	Loaded	Last Ref.	R	M
0	126	280	1	0
1	230	265	0	1
2	140	270	0	0
3	110	285	1	1

FIFO

- Page which is arrived first needs to be removed first, so here **Page – 3** having minimum loading time so as per FIFO page-3 needs to replace.

LRU (Least Recently Used)

- When page fault occurs, throw out the page that has been used for the longest time.
- Page page-1 is not used for the long time from all four, so LRU suggest replacing **page-1**.

NRU (Not Recently Used)

- NRU make approximation to replace based on R and M bits.
- When a process is started up, both page bits for all pages are set to 0 by operating system.
- Periodically, the R bit is cleared, to distinguish pages that have not been referenced recently from those that have been
- When page fault occurs, the operating system inspects all the pages and divide them into 4 categories based on current values of their R and M bits
    - Case 0 : not referenced, not modified
    - Case 1 : not referenced, modified
    - Case 2 : referenced, not modified
    - Case 3 : referenced, modified
- The NRU (Not Recently Used) algorithm removed a page at random from the lowest nonempty class.
- In given example
    - Page-0 is of class-2 (referenced, not modified)
    - Page-1 is of class-1 (not referenced, modified)
    - Page-2 is of class-0 (not referenced, not modified)
    - Page-3 is of class-3 (referenced, modified)
    - So lowest class **page-2** needs to be replaced by NRU

(11) What is page fault handling? How OS handles page fault handling?

Atmiya University Rajkot

The sequence of events is as follows:

1. The hardware traps to the kernel, saving the program counter on the stack.

2. An assembly code routine is started to save the general registers and other volatile information, to keep the operating system from destroying it.

3. The operating system discovers that a page fault has occurred, and tries to discover which virtual page is needed. Often one of the hardware registers contains this information. If not, the operating system must retrieve the program counter, fetch the instruction, and parse it in software to figure out what it was doing when the fault hit.

4. Once the virtual address that caused the fault is known, the system checks to see if this address is valid and the protection consistent with the access. If not, the process is sent a signal or killed. If the address is valid and no protection fault has occurred, the system checks to see if a page frame is free. It no frames are free, the page replacement algorithm is run to select a victim.

5. If the page frame selected is dirty, the page is scheduled for transfer to the disk, and a context switch takes place, suspending the faulting process and letting another one run until the disk transfer has completed. In any event, the frame is marked as busy to prevent it from being used for another purpose.

6. As soon as the page frame is clean (either immediately or after it is written to disk), the operating system looks up the disk address where the needed page is, and schedules a disk operation to bring it in. While the page is being loaded, the faulting process is still suspended and another user process is run, if one is available.

7. When the disk interrupt indicates that the page has arrived, the page tables are updated to reflect its position, and the frame is marked as being in normal state.

8. The faulting instruction is backed up to the state it had when it began and the program counter is reset to point to that instruction.

Atmiya University Rajkot

9. The faulting process is scheduled, and the operating system returns to the assembly language routine that called it.

10. This routine reloads the registers and other state information and returns to user space to continue execution, as if no fault had occurred.

(12) What is Segmentation? Explain.

- Virtual memory is one-dimensional in nature because the virtual address space go from 0 to some maximum address, one address after another.
- There are many problems where separate virtual address space for different entities of process is much better.

Segment

- A general solution is to provide the machine with many independent address spaces called **segments**.
- Each segment consists of a linear sequence of addresses, from 0 to the maximum allowed.
- Different Segments may have different lengths.
- Segment lengths may change during execution.
- Different Segments can grow or shrink independently without affecting each other.
- To specify address in these segments or two dimensional memories, the program must supply a two part address, a segment number and address within the segment.

Advantages of Segmentation

- Segmentation provides simplified data structure to handle growing and shrinking of data.
- If each procedure occupies a separate segment, with address 0 as its starting address, the linking of procedures compiled separately is simplified.
- If the procedure in segment n is modified and recompiled, no other procedures need to be changed.
- Segmentation also facilitates sharing procedures or data between several processes. A common example is shared library.
- Each segment forms a logical entity of which the programmer is aware, such as procedure, or an array, or a stack, different segments can have different kind of protection.

Atmiya University Rajkot

- In paging system programmer is unaware of the content of pages, but in segmentation user knows in advance the content of the segments.

Paged Segmentation

- Generally in segmented memory swapping done entirely in segment wise. Entire segment get swapped-out or swapped-in.
- If segments are large, it may be inconvenient or even impossible to keep them in main memory in their entirely.
- Idea of paging the segments is practical one, so only those pages from segments that are actually needed have to be around, these concept dividing segments into pages is called **paged segmentation.**

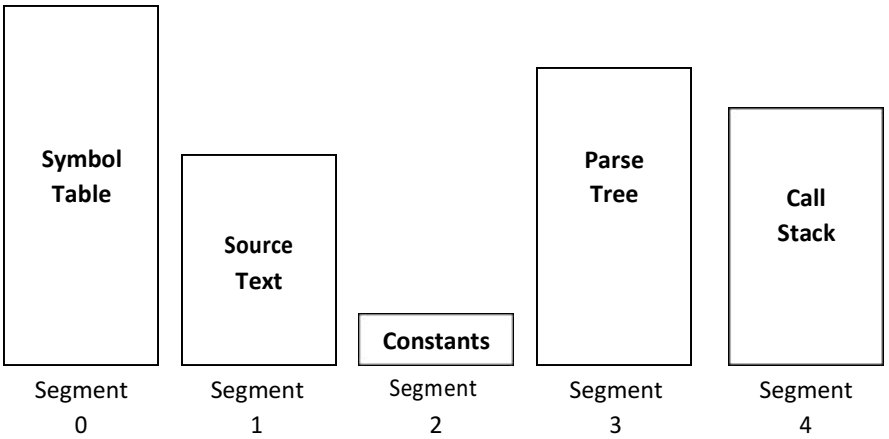

Different Logical Segments of Compiler having five tables

Figure 5-12. A segmented memory allows each table to grow or shrink independently

- Here, an example of MULTICS is considered to understand segmentation with paging.
- Segmented memory Virtual Address consists of two parts: the segment number and address within segment, the address within segment is further divided into a page number and a word within a page.
- Program has a segment table, with one entry per segment, its entry contains pointer to its page table.
- When memory reference occurs, the following steps occur…
  - The segment number used to find segment descriptor.
  - Check is made to see if the segment's page table is in memory.
    - If not, segment fault occurs.

Atmiya University Rajkot

- If there is a protection violation, a fault (trap) occurs.
- Page table entry for the requested virtual page examined.
  - If the page itself is not in memory, a page fault is triggered.
  - If it is in memory, the main memory address of the start of the page is extracted from the page table entry
- The offset is added to the page origin to give the main memory address where the word is located.
- The read or store finally takes place.

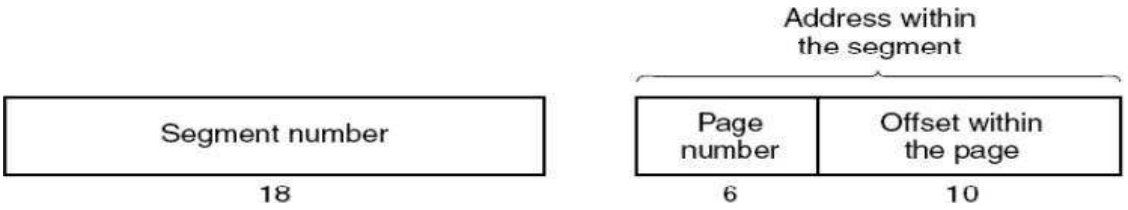

Figure 5-13. A 34-bit MULTICS virtual address.

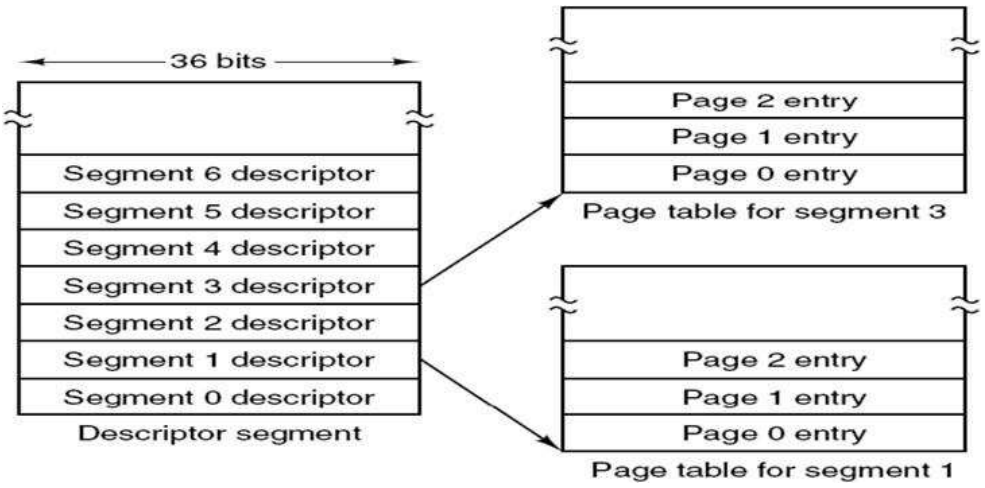

Figure 5-14 (a). The MULTICS virtual memory. The descriptor segment points to the Page tables.

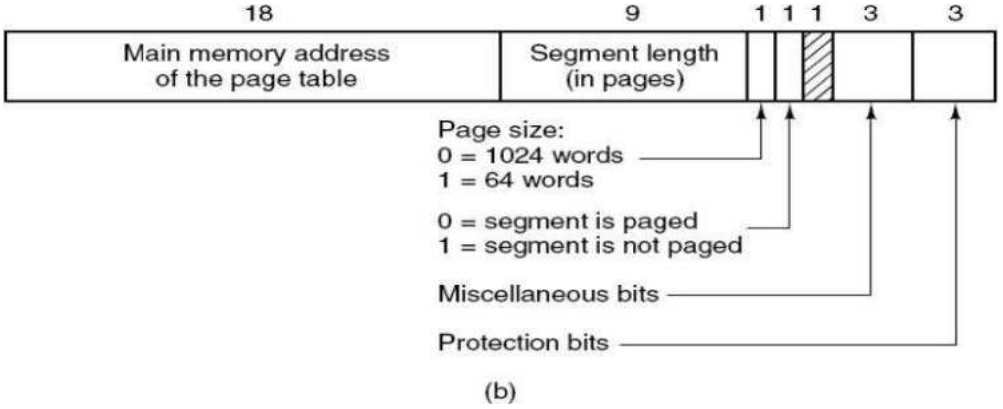

Figure 5-14. The MULTICS virtual memory. (b) A segment descriptor. The numbers are the field lengths.

(13) Discuss the issues associated with paging and solution of it.

- In any paging system, two major issues must be faced:
  1. The mapping from virtual address to physical address must be fast.
  2. If the virtual address space is large, the page table will be large.

The mapping from virtual address to physical address must be fast.

- In the absence of paging, to fetch an instruction requires only one memory reference.
- With paging, one more memory reference is required to access the page table.
- Since execution speed is generally limited by the rate at which the CPU can get instructions and data out of the memory, having to make two memory references per instruction reduce performance by half.
- Most programs access a small number of pages frequently.
- The solution that has been devised is to equip computers with a small hardware device for mapping virtual addresses to physical addresses without going through the page table.
- The device, called a TLB (Translation Lookaside Buffer) or sometimes an associative memory, is illustrated in Fig. 5-15.
- It is usually inside the MMU and consists of a small number of entries, eight in this example, but rarely more than 256.

Valid	Virtual page	Modified	Protection	Page frame
1	140	1	RW	31
1	20	0	R X	38
1	130	1	RW	29
1	129	1	RW	62
1	19	0	R X	50
1	21	0	R X	45
1	860	1	RW	14
1	861	1	RW	75

Figure 5-15. A TLB to speed up paging.

- Each entry contains information about one page, including the virtual page number, a bit that is set when the page is modified, the protection code (read/write/execute permissions), and the physical page frame in which the page is located.
- These fields have a one-to-one correspondence with the fields in the page table, except for the virtual page number, which is not needed in the page table. Another bit indicates whether the entry is valid (i.e., in use) or not.
- Let us now see how the TLB functions.
- When a virtual address is presented to the MMU for translation, the hardware first checks to see if its virtual page number is present in the TLB by comparing it to all the entries simultaneously (i.e., in parallel).
- Doing so requires special hardware, which all MMUs with TLBs have.
- If a valid match is found and the access does not violate the protection bits, the page frame is taken directly from the TLB, without going to the page table.
- If the virtual page number is present in the TLB but the instruction is trying to write on a read-only page, a protection fault is generated.
- When the virtual page number is not in the TLB, the MMU detects the miss and does an ordinary page table lookup.
- It then evicts one of the entries from the TLB and replaces it with the page table entry just looked up.
- Thus if that page is used again soon, the second time it will result in a TLB hit rather than a miss.

- When an entry is purged from the TLB, the modified bit is copied back into the page table entry in memory.
- The other values are already there, except the reference bit. When the TLB is loaded from the page table, all the fields are taken from memory.

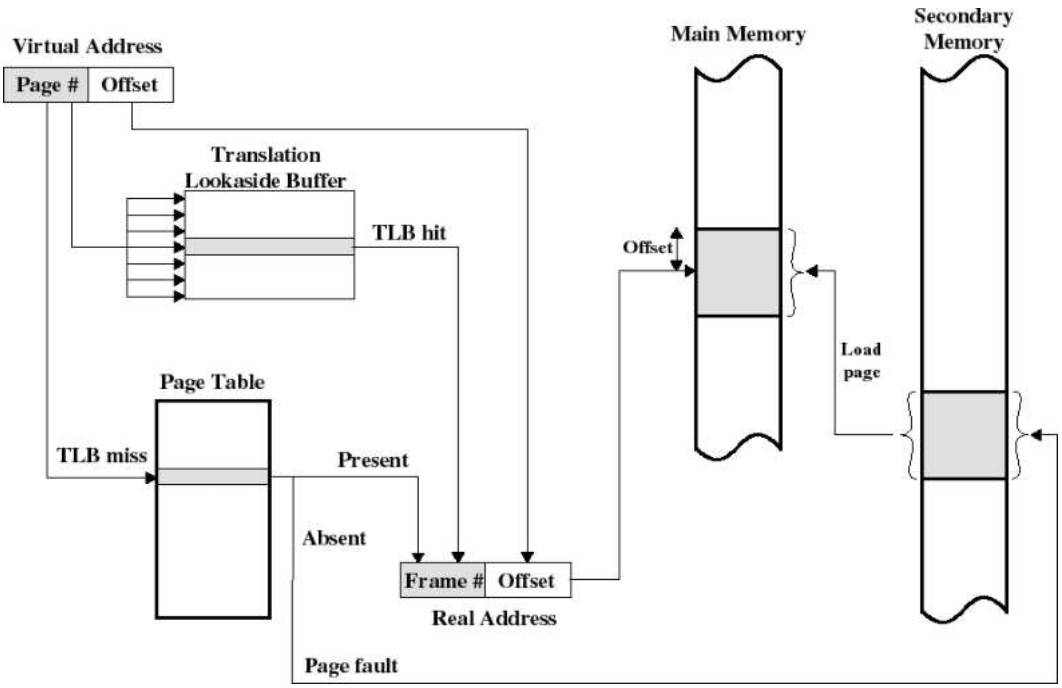

Figure 5-16. Translation Lookaside buffers Example

If the virtual address space is large, the page table will be large.

There are two ways of dealing with very large virtual address spaces.

1. **Multilevel Page Tables**
   - The secret to the multilevel page table method is to avoid keeping all the page tables in memory all the time.
   - In particular, those that are not needed should not be kept around.
   - In Fig. 5-17(b) we see how the two-level page table works.
   - On the left we see the top-level page table, with 1024 entries, corresponding to the 10-bit *PT1* field.
   - When a virtual address is presented to the MMU, it first extracts the *PT1* field and uses this value as an index into the top-level page table.

- Each of these 1024 entries in the top-level page table represents 4M because the entire 4-gigabyte (i.e., 32-bit) virtual address space has been chopped into chunks of 4096 bytes.
- The entry located by indexing into the top-level page table yields the address or the page frame number of a second-level page table.
- Entry 0 of the top-level page table points to the page table for the program text, entry 1 points to the page table for the data, and entry 1023 points to the page table for the stack.
- The other (shaded) entries are not used. The *PT2* field is now used as an index into the selected second-level page table to find the page frame number for the page itself.

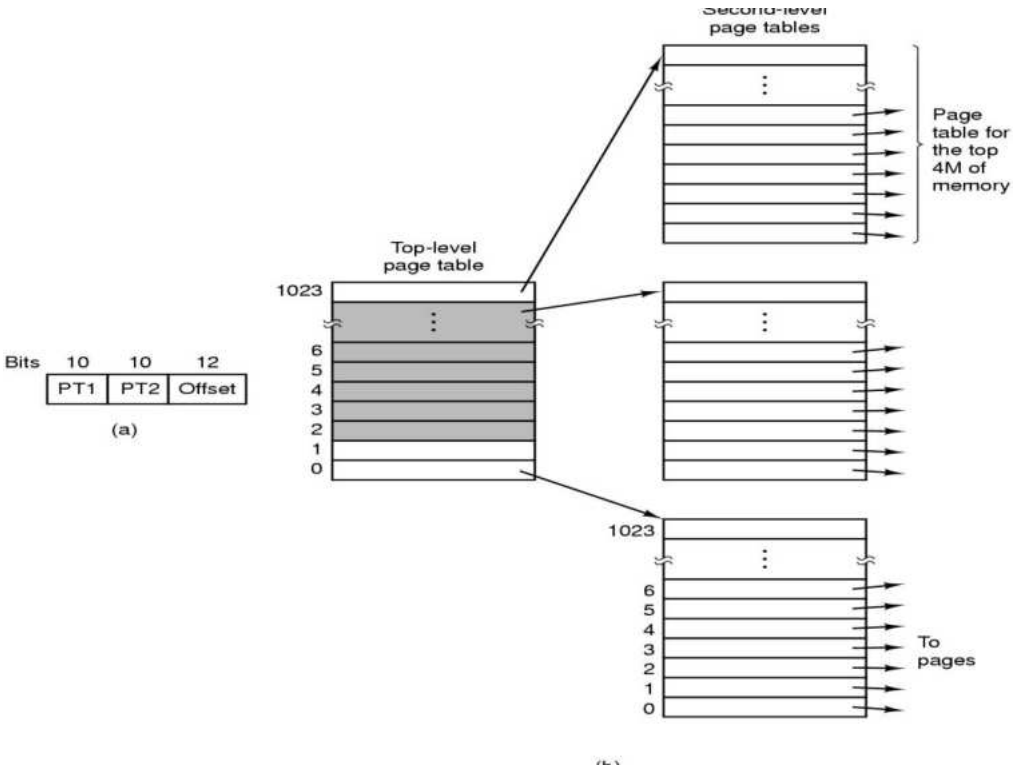

Figure 5-17. (a) A 32-bit address with two page table fields. (b) Two-level page tables.

2. Inverted Page Tables

- An alternative to ever-increasing levels in a paging hierarchy is known as **inverted page tables**.
- In this design, there is one entry per page frame in real memory, rather than one

entry per page of virtual address space.

- For example, with 64-bit virtual addresses, a 4-KB page size, and 4 GB of RAM, an inverted page table requires only 1,048,576 entries.
- The entry keeps track of which (process, virtual page) is located in the page frame.
- Although inverted page tables save lots of space, at least when the virtual address space is much larger than the physical memory, they have a serious down-side: virtual-to-physical translation becomes much harder.
- The solution is to make use of the TLB.
- If the TLB can hold all of the heavily used pages, translation can happen just as fast as with regular page tables.
- On a TLB miss, however, the inverted page table has to be searched in software.
- One feasible way to accomplish this search is to have a hash table hashed on the virtual address.

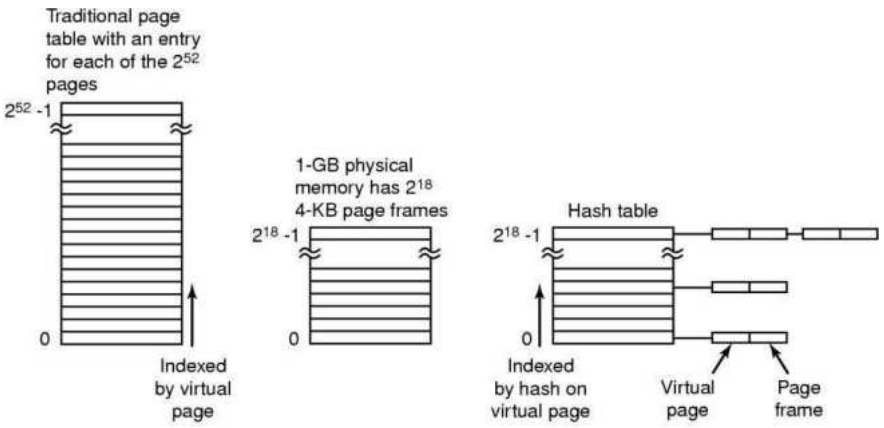

Figure 5-18. Comparison of a traditional page table with an inverted page table.

- All the virtual pages currently in memory that have the same hash value are chained together, as shown in Fig. 5-18.
- If the hash table has as many slots as the machine has physical pages, the average chain will be only one entry long, greatly speeding up the mapping.
- Once the page frame number has been found, the new (virtual, physical) pair is entered into the TLB.

(14) Compare paging and segmentation.

Paging	Segmentation
Paging was invented to get large address apace without having to buy more physical memory.	Segmentation was invented to allow programs and data to be broken up into logically independent address space and to add sharing and protection.
The programmer does not aware that paging is used.	The programmer is aware that segmentation is used.
Address space is one dimensional.	Many independent address spaces are there.
Procedure and data cannot be distinguished and protected separately.	Procedure and data be distinguished and protected separately.
Change in data or procedure requires compiling entire program.	Change in data or procedure requires compiling only affected segment not entire program.
Sharing of different procedures not available.	Sharing of different procedures available.

(1) What is Unix? What is Linux?

- UNIX is a powerful operating system originally developed at AT&T Bell Labs.
- It is very popular among the scientific, engineering, and academic communities due to its multi-user and multi-tasking environment, flexibility and portability, electronic mail and networking capabilities, and the numerous programming, text processing and scientific utilities available.
- The UNIX system is mainly composed of three different parts: the kernel, the file system, and the shell.
- The kernel is that part of the system which manages the resources of whatever computer system it lives on, to keep track of the disks, tapes, printers, terminals, communication lines and any other devices.
- The file system is the organizing structure for data. The file system is perhaps the most important part of the Linux operating system. The file system goes beyond being a simple repository for data, and provides the means of organizing the layout of the data storage in complex ways.
- The shell is the command interpreter. Although the shell is just a utility program, and is not properly a part of the system, it is the part that the user sees. The shell listens to your terminal and translates your requests into actions on the part of the kernel and the many utility programs
- Linux is a freely available, open source, Unix-like operating System. Written originally for the PC by Linus Torvalds (A young student in the University of Helsinki), with the help of many other developers across the internet.
- Linux now runs on multiple hardware platforms, from the smallest to the largest, and serves a wide variety of needs from servers to movie-making to running businesses to user desktops.

(2) Explain the Features of the Unix in detail.

- **The following features are provided by the UNIX operating System.**
- **Open Source**
  - Linux source code is freely available and it is community based development project.
  - Multiple teams are working in collaboration to enhance the capability of Linux operating system and it is continuously evolving.

Atmiya University Rajkot

- **Multiuser capability**
  - In a multi user system the same computer resources hard disk, memory etc are accessible to the many users.
  - Users are given the different terminal to operate, a terminal in turn, is a keyboard and a monitor. All the terminals are connected to the main computer whose resources are available by all users.
  - So the user at any of the terminals cannot use only the computer but also any devices that may be attached like a printer.

- **Multitasking capability**
  - It means that it is capable of carrying out more than one job at the same time it allow you to type in a program in its editor while simultaneously executes some other command you might have given earlier.
  - Say for example you might have given earlier sort and copy a huge file this job will perform in the background while in foreground you use editor.
  - This is managed by dividing the CPU time between all processes being carrying out.

- **Communication**
  - UNIX has the excellent communication with the users. The communication may be within the network of a single main computer or between two or more such computer network.
  - The users can easily exchange mail, data, and programs through such networks.

- **Security**
  - Unix Has the three provisions for protecting the data. The first is provided by assigning the passwords and login names to the individual users and ensuring that nobody has excess to your work.
  - All the five have the read write and execute permissions to each file which decide who can excess a particular file, which can modify and execute it.
  - Lastly there is a file encryption utility which encodes your file into an unreadable format so even if someone succeeds in opening it your secrets are safe.

- **Portability**
  - Portability means software can works on different types of hardware in same way.
  - It is one of the main reasons for the popularity of the Unix. It can be ported to almost any computer system with only the minimum adoptions.

Atmiya University Rajkot

- A portability credit of the UNIX is because of the C language, it written in C language and C language is portable.

(3) Explain Linux Architecture.

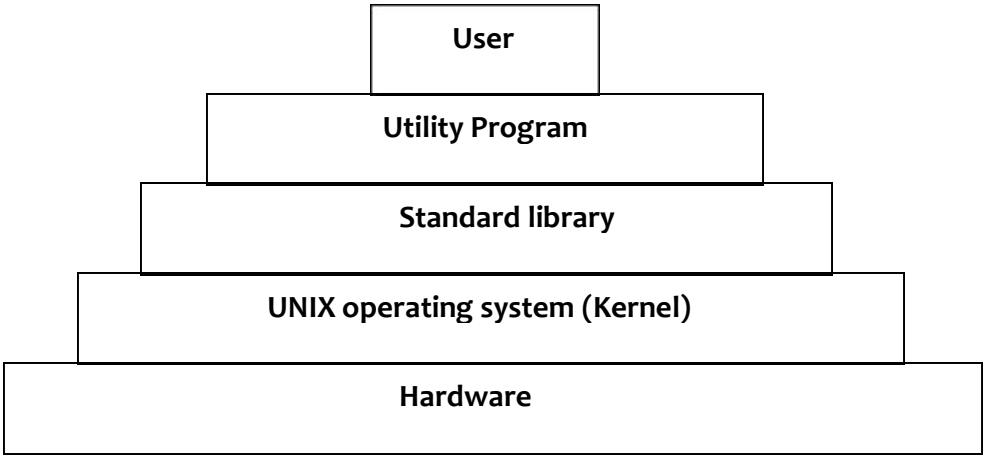

- **Hardware**
  - The bottom layer is hardware.
  - It contains physical devices of computer like CPU, Memory, Disk, printer etc.
  - UNIX kernel will interface with this hardware.

- **UNIX Kernel**
  - Kernel is program which provides services of OS like memory management, file management and process management.
  - Kernel will provide interface with hardware and user programs.

- **Standard library**
  - It contains set of procedures.
  - This is collection of system level files.

- **Utility program:**
  - Utility programs are used to make user programs and make work easier.
  - Utility programs like compilers, assemblers, editors etc.

- **User**
  - User programs are comes for processing and interact with system.

(4) Explain the Linux Kernel Structure.

- The following Figure shows the overall structure of the Linux. The kernel sits directly on the hardware and enables the interactions with I/O devices and memory management.

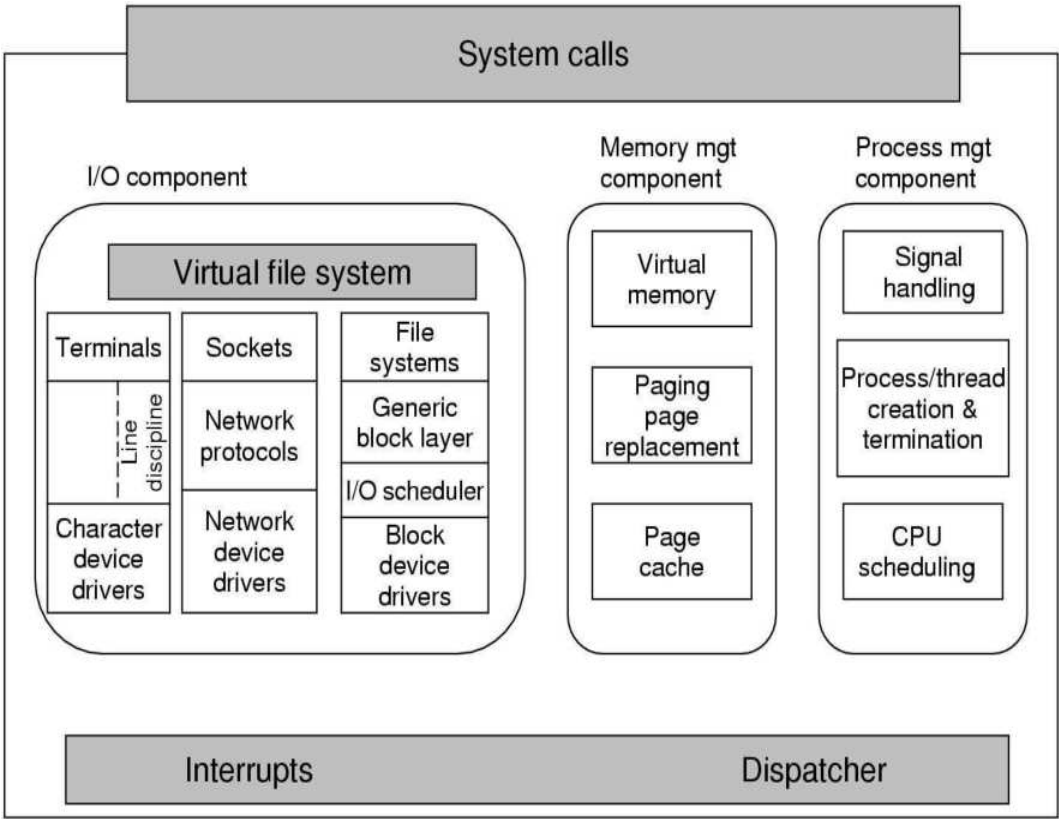

Structure of the Linux kernel

- At the lowest level it contains interrupt handlers which are the primary way for interacting with the device, and low level dispatching mechanism.
- The dispatching occurs when an interrupt happens and also when the kernel completes some operations and it is time to start up a user process again.
- Now we divide the various kernel subsystems into the three main components. The I/o component contains the kernel pieces and responsible for interacting with the devices and performing the network and storage I/O operations.
- At the highest level the I/O operations are all integrated under a virtual file system and at lowest level, all I/O operations pass through some device driver.

Atmiya University Rajkot

- All Linux drivers are classified as either a character device driver or block device drivers, with the main difference that random accesses are allowed on the block devices and not on the character devices.
- Technically network devices are really character devices, but they are handled somewhat differently, so It is preferable to separate them.
- The layer above the network drivers handle a kind of the routing function and making sure that the right packet goes to the right devices.
- Sockets interface which allows the program to create sockets for the particular network.
- On the top of the disk drivers is the I/O scheduler who is responsible for ordering and issuing disk operation request in a way that tries to converse waste full disk head movement.
- At the very top of the block device column are the file systems Linux may have the multiple file system excising concurrently. In order to hide the architectural differences of the various hardware devices from the file system implementation, a generic block device layer provides an abstraction layer used by all file system.
- At the right side of the fig there are two key components of the Linux kernel these are responsible for the memory and process management tasks.
- Memory management tasks include maintaining the virtual to physical memory mappings, maintaining a cache of the recently accessed pages and implementing a good page replacement policy.
- The key responsibility of the process management component is the creation and termination of the process. It also includes the process scheduler and code for the signal handling.
- Finally at the very top is the system call interface in to the kernel. All system calls come here, causing a trap which switches the execution from the user mode in to the kernel. Mode.

(5) Explain the directory Structure or file system structure of the Unix/linux.

- The initial Linux file system was the MINIX 1 file system. However, infect it limited file names to 14 characters and its maximum file size was 64 MB.
- The first improvement was the ext files system which allow file names of 255 characters and file size of 2 GB, but it was slower than MINIX 1 file system so the ext 2 file system was invented, with long file name, long file, and better performance and it has became

Atmiya University Rajkot

the main file system.

- A Linux file is sequence of 0 or more bytes containing arbitrary information. No distinction is made between ASCII file, binary file or any other kinds of the file.
- File names consists of a based name and an extension, separated by a dot. For example prog.c is c program anprog.o is an object file. Extension may be of any length and file may have multiple extensions, for example prog.java.gz is a compressed java program.
- File can be grouped together in directories. Directories are stored as a files and it can be treated like files.
- The / characters is known as the root directory and also use to separate directory names.

x	Contents
bin	Binary (executable) programs
dev	Specials files for I/O devices
etc	Miscellaneous system files
lib	Libraries
usr	User directories

Some important directory found in most Linux systems

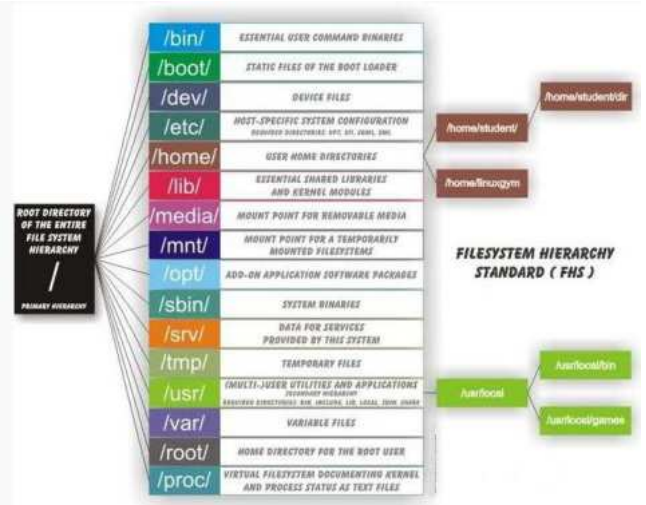

- **/:**
  - This is the root directory which should contain only the directories needed at the top level of the file structure.
- **/bin**:
  - This is where the executable files are located. They are available to all user.
  - /dev:

Atmiya University Rajkot

- It includes files for devices, holds the software necessary to update peripherals such as printers and terminal.

- **/etc:**
  - It contains various administrative files such as lists of user name and passwords, configuration files, disk configuration files.
- **/mnt**
  - Used to mount other temporary file systems, such as cdrom and floppy for the CD-ROM drive and floppy diskette drive, respectively
- **/home**
  - Contains the home directory for users and other accounts.

/tmp

- Holds temporary files used between system boots

/usr

- Used for miscellaneous purposes, or can be used by many users. Includes administrative commands, shared files, library files, and others

/var

- Typically contains variable-length files such as log and print files and any other type of file that may contain a variable amount of data

- There are 2 ways to specify file names in Linux.

1) **Absolute path :-**

➢ It tells us how to get the file starting at the root directory. For example / usr/ ast/ books/ mos3/ chap-10. This tells system to look in the root directory for an usr directory. Then looks for the directory ast. The ast directory contains book directory which contains the mos3 directory which contains the file chap-10.

2) **Relative path :-**

➢ Absolute path name are often long and inconvenient for this reason Linux allows the users to designate the directory in which they are currently working as the working directory. A path name specified relative to the working directory is a relative path. For example if / usr/ ast /books/mos3 is the working directory

Atmiya University Rajkot

(6) Explain the role or function of the kernel.

- Each process asks for the system resources like computing power, memory network connectivity etc. The kernel is the bulk of the executable code in charge of handling such request.
- The kernel is the main component of most computer operating systems. It is a bridge between applications and the actual data processing done at the hardware level.
  The following are the major role of the kernel :
- **Resource allocation :-**
  - The kernel's primary function is to manage the computer's resources and allow

Atmiya University Rajkot

other programs to run and use these resources. These resources are- CPU, Memory and I/O devices.

- **Process Management :-**
  - The kernel is in charge of creating, destroying and handling the input output of the process.
  - Communications amongst the different processes is the responsibility of the kernel.
- **Memory Management :-**
  - The memory is the major resource of the computer and the policy used to deal with it is a critical.
  - The kernel builds a virtual address space for all the process on the top of the resource. The different parts of the kernel interact with the memory management subsystem by using the function calls.
- **File System :-**
  - The kernel builds the structured file system on the top of the unstructured hardware.
  - Kernel also supports the multiple file system types that is different way of managing the data.
- **Device Control :-**
  - Every system maps into the physical device.
  - All the device control operations are performed by the code that is specific to the device being addressed. This code is called device driver.
- **Networking :-**
  - It will be managed by the operating system and also control the program execution according to the network activity.
  - Routing and address resolution issues are also handled by the kernel.
- **Inter - Process Communication**
  - Kernel provides methods for Synchronization and Communication between processes called Inter- Process Communication (IPC).
  - There are various approaches of IPC say, semaphore, shared memory, message queue, pipe (or named fifo), etc.
- **Security or Protection Management**
  - Kernel also provides protection from faults (error control) and from malicious behaviors (Security).
  - One approach toward this can be Language based protection system, in which the kernel will only allow code to execute which has been produced by a trusted

Language compile

Atmiya University Rajkot

(7) Explain in brief roles/ functions of shell.

- UNIX shell act as a command interpreter.
- It gathers input from user and executes programs based on that input, when a program finishes executing; it displays that program's output.
- It is primary interface between a user sitting at his terminal and operating system, unless the user is not using a graphical interface.
- A shell is an environment in which user can run our commands, programs, and shell scripts.
- There can various kinds of shells such **as sh (bourne shell), csh (C shell), ksh (korn shell) and bash.**
- When any user logs in, a shell is started.
- The shell has the terminal as standard input and standard output.
- It starts out by typing the prompt, a character **such as $, which tells user** that shell is waiting to accept command at user level **if you are root then sign is #.**
- For example if user types date command,
  $ date
  sat Mar 12 08:30:19 IST 2016
- The shell creates a child process and runs date program as child.
- While the child process is running, the shell waits for it to terminate.
- When child finishes, the shell types the prompt again and tries to read the next input line.
- Shell is work as interface, command interpreter and programming language.

- **Shell - As interface**
  - Shell is interface between user and computer.
  - User can directly interact with shell.
  - Shell provide command prompt to user to execute commands.
- **Shell - As command interpreter**
  - It read command enter by user on prompt.
  - It Interpret the command, so kernel can understand it easily.
- **Shell - As programming language**
  - Shell is also work as programming language.
  - It provides all features of programming language like variables, control structures and loop structures.

Atmiya University Rajkot

- **Cshell : -**
  - The C shell was written by Bill Joy at the University of California at Berkeley. His main intent for writing the C shell was to create a shell with C language-like syntax.
  - Customizable environment. The C shell has three separate files which are used for customizing its environment. These three files are *.cshrc*, *.login*, and *.logout*.

  - Abbreviate commands. (Aliases.)
  - History. (Remembers commands typed before.)
  - Job control. (Run programs in the background or foreground.)
  - Shell scripting. (One can write programs using the shell.)
  - Keyboard shortcuts.
  - Default prompt is % **denoted as csh** %.

- **Korn shell : -**
  - The Korn shell uses two startup files, the *.profile* and the *.kshrc*. The *.profile* is read once, by your login ksh, while the *.kshrc* is read by each new ksh**.**
  - The Korn shell was developed in the early 1980s by David Korn of AT&T labs, and contains many similar features to the sh and csh shells.
  - The Korn shell has an advantage over the traditional Unix shell in that it contains the functionality of many scripting and programming languages, such as perl and awk, meaning that programs can be run quickly and efficiently within the Korn shell.
  - Default prompt is $ denoted as ksh.
- **Bourne shell : -**
  - It was written by Steve Bourne at AT&T Bell Labs. It is the original UNIX shell. It is faster and more preferred. It lacks features for interactive use like the ability to recall previous commands. It also lacks built-in arithmetic and logical expression handling. It is default shell for Solaris OS.
  - Default prompt is $ for user denoted as sh.
- **Bourne-again shell : -**
  - The Bourne-Again Shell (bash) is a clone of the Bourne shell, written and licensed under the GNU General Public License, meaning the code for the shell, as well as the shell itself, is freely available.
  - The bash shell runs using very similar syntax to the sh, ksh and csh shells. However, there are some small changes with the bash shell. For example, the bash shell runs under all GNU/Linux variant operating systems, such as Ubuntu and Debian.
  - The bash shell also supports many interactive features, such as a command history that can be accessed with a few keystrokes.
  - It is the default shell on Linux operating system.
  - Default prompt is $ for user denoted as bash.

Note * Root user default prompt is hostname #.

Atmiya University Rajkot

(8) *Files and Directory permission:*

Permission level:

UGOA:

user –

The user permissions apply only the owner of the file or directory, they will not impact the actions of other users.

group –

The group permissions apply only to the group that has been assigned to the file or directory, they will not effect the actions of other users.

others –

The others permissions apply to all other users on the system, this is the permission group that you want to watch the most.

all users –

The All Users permissions apply to all other users on the system, this is the permission group that you want to watch the most.

Permission Types:

RWX-:

- ***read*** *– The Read permission refers to a user's capability to read the contents of the file.*
- ***write*** *– The Write permissions refer to a user's capability to write or modify a file or directory.*
- ***execute*** *– The Execute permission affects a user's capability to execute a file or view the contents of a directory.*
- *- no permission.*

How to assign permission:

Symbolic Mode

In the Absolute mode, you change permissions for all 3 owners. In the symbolic mode, you can modify permissions of a specific owner. It makes use of mathematical symbols to modify the file permissions.

Operator	*Description*
+	*Adds a permission to a file or directory*
-	*Removes the permission*
=	*Sets the permission and overrides the permissions set earlier.*

Atmiya University Rajkot

The octal notations

You can also use octal notations like this.

Octal	Binary	File Mode
0	000	---
1	001	--x
2	010	-w-
3	011	-wx
4	100	r--
5	101	r-x
6	110	rw-
7	111	rwx

Absolute(Numeric) Mode

In this mode, file permissions are not represented as characters but a three-digit octal number. The table below gives numbers for all for permissions types.

Number	***Permission Type***	***Symbol***
0	***No Permission***	***---***
1	***Execute***	***--x***
2	***Write***	***-w-***
3	***Execute + Write***	***-wx***
4	***Read***	***r--***
5	***Read + Execute***	***r-x***
6	***Read +Write***	***rw-***
7	***Read + Write +Execute***	***rwx***

Atmiya University Rajkot

Let's see the chmod command in action.

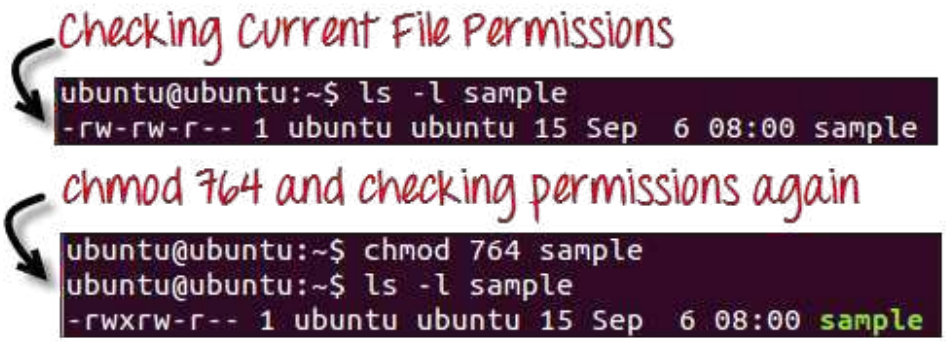

In the above-given terminal window, we have changed the permissions of the file 'sample to '764'.

'764' absolute code says the following:

- *Owner can read, write and execute*
- *Usergroup can read and write*
- *World can only read*

This is shown as '-rwxrw-r-

This is how you can change the permissions on file by assigning an absolute number.

(9) Give comparison of UNIX and Windows Operating System.

- UNIX is a open source operating system (we can modify the code), easily available free of cost. Windows requires licensing and is a paid operating system.
- UNIX is a command based operating system while windows is menu based.
- In UNIX I/O components are stored as file while windows does not support this functionality.
- Windows must boot from a primary partition. UNIX can boot from either a primary partition or a logical partition inside an extended partition.
- Windows allows programs to store user information (files and settings) anywhere. This makes it impossibly hard to backup user data files and settings and to switch to a new computer.
- UNIX is CLUI (Command Line User Interface) operating system while a window is GUI (Graphical User Interface) Operating System.
- Windows program are event driven i.e. main program waits for some events to happen and calls a procedure to handle it. In contrast unix program consist of code that does something or makes system calls to get some services done.
- In UNIX there is one to one relation between system calls and library procedures, while in windows library calls and system calls are decoupled. Win 32 API(Application Program Interface) are used to get operating system services.
- UNIX supports various functionality as linking files, mounting and unmounting of files, file permissions using chmod command, which are not present in windows.
- UNIX is less affected by viruses and malwares and hence more secure compared to windows.
- Examples of UNIX operating system are Ubuntu, Fedora, Red Hat, Debian, Archlinux, Androidetc while examples of windows operating system are Windows 8, 8.1, 7, Vista, XP.

Atmiya University Rajkot

1) **cal**:- Displays a calendar

Syntax:- cal [options] [month] [year]

Description :-

- cal displays a simple calendar. If arguments are not specified, the current month is displayed. The switching options are as follows:

-1	Display single (current) month output. (This is the default.)
-3	Display prev/current/next month output
-s	Display Sunday as the first day of the week (This is the default.)
-m	Display Monday as the first day of the week
-j	Display Julian dates (days one-based, numbered from January 1)
-y	Display a calendar for the current year

Example:-

$cal

or

$cal 02 2016

Feb 2016

Su	Mo	Tu	We	Th	Fr	Sa
	1	2	3	4	5	6
7	8	9	10	11	12	13
14	15	16	17	18	19	20
21	22	23	24	25	26	27
28	29					

2) **clear** :- It clears the terminal screen.

Syntax :- clear

Description :-

- Clear clears your screen if this is possible, including its scroll back buffer.
- Clear ignores any command-line parameters that may be present.

3) **pwd :-** Displays path from root to current directory

Syntax :- pwd [options]

Example:

$ pwd

/home/kumar/progs

4) **cd**:- It is used to change the directory.

Syntax :- cd [directory]

Description:-

Atmiya University Rajkot

- Used to go back one directory on the majority of all UNIX shells. It is important that the space be between the cd and directory name or ..

Example:-

$ pwd
/home/kumar
$ cd progs
$ pwd
/home/kumar/progs
$ cd ..
/home/kumar

5) **ls**:- Lists the contents of a directory
Syntax :- ls [options]
Description :-

-a	Shows you all files, even files that are hidden (these files begin with a dot.)
-A	List all files including the hidden files. However, does not display the working directory (.) or the parent directory (..).
-d	If an argument is a directory it only lists its name not its contents
-l	Shows you huge amounts of information (permissions, owners, size, and when last modified.)
-p	Displays a slash (/) in front of all directories
-r	Reverses the order of how the files are displayed
-R	Includes the contents of subdirectories

Example:-

$ ls – l
-rw-r----- 1 student student 23 Jan 16 15:27 file1.txt
Field Explanation:

- If first character is – then it is normal file
- If it is d then it is directory
- **Field 1 – File Permissions**: Next 9 character specifies the files permission. Each 3 characters refers to the read, write, execute permissions for user, group and world In this example, -rw-r—– indicates read-write permission for user, read permission for group, and no permission for others.
- **Field 2 – Number of links**: Second field specifies the number of links for that file. In this example, 1 indicates only one link to this file.
- **Field 3 – Owner**: Third field specifies owner of the file. In this example, this file is owned by username 'student'.
- **Field 4 – Group**: Fourth field specifies the group of the file. In this example, this file belongs to "student' group.
- **Field 5 – Size**: Fifth field specifies the size of file. In this example, '13' indicates the

Atmiya University Rajkot

file size.

- **Field 6 – Last modified date & time**: Sixth field specifies the date and time of the last modification of the file. In this example, 'Jan 16 15:27' specifies the last modification time of the file.
- **Field 7 – File or directory name**: The last field is the name of the file or directory. In this example, the file name is file1.txt

6) **exit** :- It is used to terminate a program, shell or log you out of a network normally.
Syntax :- exit

7) **echo** :- It prints the given input string to standard output.
Syntax :- echo string
Example:-

$ echo "hi.. hello unix"
hi.. hello unix

8) **who** :- who command can list the names of users currently logged in, their terminal, the time they have been logged in, and the name of the host from which they have logged in.
Syntax :- who [options] [file]
Description:-

am i	Print the username of the invoking user, The 'am' and 'i' must be space separated.
-b	Prints time of last system boot.
-d	print dead processes.
-H	Print column headings above the output.
-l	Include idle time as HOURS:MINUTES. An idle time of . indicates activity within the last minute.
-m	Same as who am i.
-q	Prints only the usernames and the user count/total no of users logged in.

Example :-

$ who
dietstaffpts/1 2016-02-20 22:42 (:0.0)
dietstaffpts/2 2016-02-20 09:30 (:0.0)

- Here first column shows user name, second shows name of the terminal the user is working on. Third& fourth column shows date and time of logging, last column shows machine name.

9) **who am i**:- Print effective userid
Syntax :- who am i

Atmiya University Rajkot

Description: - Print the user name associated with the current effective user id.
Example :-

$ who am i
dietstaffpts/3 2016-02-10 08:52 (:0.0)

- Here first column shows user name, second shows name of the terminal the user is working on. Third & fourth column shows date and time of logging, last column shows machine name.

10) **mkdir**:- This command is used to create a new directory
Syntax :- mkdir [options] directory
Description :-

-m	Set permission mode (as in chmod)
-p	No error if existing, make parent directories as needed.
-v	Print a message for each created directory
directory	The name of the directory that you wish to create

Example:-

$ mkdir aaa

- The above command will create directory named aaa under the current directory. We can also create number of subdirectories with one mkdir command.

11) **rmdir**:- It is used to delete/remove a directory and its subdirectories.
Syntax :- rmdir [options..] Directory
Description :-

- It removes only empty directory.

-p	Allow users to remove the directory and its parent directories which become empty.

12) **bc**:- bc command is used for command line calculator. It is similar to basic calculator. By using which we can do basic mathematical calculations.
Syntax :- bc [options]
Description :-

- bc is a language that supports arbitrary precision numbers with interactive execution of statements.
- bc starts by processing code from all the files listed on the command line in the order listed. After all files have been processed, bc reads from the standard input. All code is executed as it is read.

Atmiya University Rajkot

-q	To avoid bc welcome message
-l	To include math library functionalities

Example:-

$ bc

bc 1.06 Copyright 1991-1994,1997,1998,2000 Free Software Foundation,Inc. This is free software with ABSOLUTELY NO WARRANTY. For details type `warranty'. 2*3
6

- The above command used is for mathematical calculations.

$ bc -l

bc 1.06 Copyright 1991-1994,1997,1998,2000 Free Software Foundation,Inc. This is free software with ABSOLUTELY NO WARRANTY.For details type `warranty'.11+2
13

- The above command displays the sum of '11+2'.

$ bc calc.txt

bc 1.06 Copyright 1991-1994,1997,1998,2000 Free Software Foundation,Inc. This is free software with ABSOLUTELY NO WARRANTY. For details type `warranty'. 13

- 'calc.txt' file have the following code:11+2. Get the input from file and displays the output.

13) **uname**:- It is used to print system information.

Syntax :- uname [options]

Description :-

- Print certain system information.

-s	print the kernel name
-n	print the network node hostname
-r	print the kernel release
-v	print the kernel version
-m	print the machine hardware name
-o	print the operating system

Example:-

$ uname

Linux

14) **tty**:- Print the file name of the terminal connected to standard input.

Syntax :- tty

Description :-

- tty writes the name of the terminal that is connected to standard input onto

Atmiya University Rajkot

standard output.

- Command is very simple and needs no arguments.

Example :-

$tty

/student/tty10

15) **stty**:- Change and print terminal line settings.

Syntax :- sty

Description :-

- stty sets certain terminal I/O modes for the device that is the current standard input.
- Without arguments, it writes the settings of certain modes to standard output.

Example :-

$ sty

speed 19200 baud, 25 rows, 79 columns

kill = ^U

16) **cat**:- It is used to create, display and concatenate file contents.

Syntax : - cat [options] [FILE]...

Description :-

-A	Show all.
-b	Omits line numbers for blank space in the output.
-e	A $ character will be printed at the end of each line prior to a new line.
-E	Displays a $ (dollar sign) at the end of each line.
-n	Line numbers for all the output lines.
-s	If the output has multiple empty lines it replaces it with one empty line.
-T	Displays the tab characters in the output.
-v	Non-printing characters (with the exception of tabs, new-lines and form-feeds) are printed visibly.

- Two basically three uses of the cat command.

1) Create new files.
2) Display the contents of an existing file.
3) Concatenate the content of multiple files and display.

Example :-

$ cat file1.c

- Above syntax will display the content of file1.c

$ cat > file1.c

- Above syntax creates file1.c and allow us to insert content for this file.

Atmiya University Rajkot

- After inserting content you can use ctrl+d to exit the file.
- If file with same name exist then it will overwrite that file.

$ cat file1.c
process management
memory management
file mgmt
$ cat file1.c >> file2.c

- It can concatenate the contents of two files. For this you have to use append output redirection operator.
- The contents of file2.cwill be appended to file1.c.

17) **cp**:- cp command copy files from one location to another. If the destination is an existing file, then the file is overwritten; if the destination is an existing directory, the file is copied into the directory (the directory is not overwritten).
Syntax :- cp [options]... source destination
Description:-

- Here, after cp command contents of both source file and destination file files are the same.
- It will copy the content of source file to destination file.
- If the destination file doesn't exist, it will be created.
- If it exists then it will be overwritten without any warning.
- If there is only one file to be copied then destination can be the ordinary file or the directory file.

-a	archive files
-f	force copy by removing the destination file if needed
-i	interactive - ask before overwrite
-l	link files instead of copy
-L	follow symbolic links
-n	no file overwrite
-u	update - copy when source is newer than dest

Example:-

$ cp file1 file2

- The above cp command copies the content of file1.php to file2.php.

Copy folder and subfolders:
$ cp-R scripts scripts1

- The above cp command copy the folder and subfolders from scripts to scripts1

18) **rm**:- It is used to remove/delete the file from the directory.

Atmiya University Rajkot

Syntax :- rm [options..] [file|directory]
Description :-

- Files can be deleted with rm. It can delete more than one file with a single invocation. For deleting a single file we have to use rm command with filename to be deleted.
- Deleted file can't be recovered. rm can't delete the directories. If we want to remove all the files from the particular directory we can use the * symbol.

-f	Ignore nonexistent files, and never prompt before removing.
-i	Prompt before every removal.

Examlple :-

$ rm myfile.txt

- Remove the file myfile.txt. If the file is write-protected, you will be prompted to confirm that you really want to delete it.

  $ rm *
- Remove all files in the working directory. If it is write-protected, you will be prompted before rm removes it.

  $ rm -f myfile.txt
- Remove the file myfile.txt. You will not be prompted, even if the file is write-protected; if rm can delete the file, it will.

  $ rm -f *
- Remove all files in the working directory. rm will not prompt you for any reason before deleting them.

  $ rm -i *
- Attempt to remove every file in the working directory, but prompt before each file to confirm.

19) **mv**:- It is used to move/rename file from one directory to another.
Syntax :- mv [options] oldname newname
Description :-

- mv command which is short for move.
- mv command is different from cp command as it completely removes the file from the source and moves to the directory specified, where cp command just copies the content from one file to another.
- mv has two functions: it renames a file and it moves a group of files to a different directory. Mv doesn't create a copy of the file , it merely renames it. No additional space is consumed on disk during renaming. For example if we rename a file os to os1 and then if we try to read file os we will get error message as it is renamed to os1 there is no existence of file named os.

Atmiya University Rajkot

-f	mv will move the file(s) without prompting even if it is writing over an existing target. Note that this is the default if the standard input is not a terminal
-i	Prompts before overwriting another file

Example:-

$ cat file1
Memory
Process
Files
$ mv file1 file2

- rename file1 to file2
- If the destination file doesn't exist it will be created. mv can also be used to rename a directory. A group of files can also be moved to a directory. mv doesn't prompt for overwriting destination file if it exists.

20) nl :-

nl numbers the lines in a file.

Syntax: - nl [OPTION] [FILE]

Example :-

$cat list.txt
apples
oranges
potatoes
lemons
garlic
$nl list.txt
1 apples
2 oranges
3 potatoes
4 lemons
5 garlic

- In the above example, we use the cat command to display the contents of list.txt. Then we use nl to number each line and display the result to standard output.

$nl list.txt > nlist.txt
$cat nlist.txt
1 apples
2 oranges
3 potatoes
4 lemons

Atmiya University Rajkot

5 garlic

- In the above example, we run the same nl command, but redirect the output to a new file, nlist.txt. Then we use cat to display the results.

21) **cut** :- cut command is used to cut out selected fields of each line of a file. The cut command uses delimiters to determine where to split fields.

Syntax :- cut [options] filename

Description :-

file	A path name of an input file. If no file operands are specified, or if a file operand is -, the standard input will be used
-c	The list following -c specifies character positions
-d	The character following -d is the field delimiter
-f	select only these fields on each line
-b	Select only the bytes from each line as specified in LIST

Example :-

- For example, let's say you have a file named data.txt which contains the following text:
  one two three four five
  alpha beta gamma delta epsilon
- In this example, each of these words is separated by a tab character, not spaces. The tab character is the default delimiter of cut, so it will by default consider a field to be anything delimited by a tab.
- To "cut" only the third field of each line, use the command:
  $ cut -d' ' -f 3 data.txt
  three
  gamma
- let's say you want the third field and every field after it, omitting the first two fields. In this case, you could use the command:
  $ cut -d' ' -f 3- data.txt
  three four five
  gamma delta epsilon
  $ cut -c 3 file.txt
  r
  m
- For example, to output only the third-through-twelfth character of every line of data.txt, use the command:
  $ cut -c 3-12 data.txt
  e two thre
  pha beta g

Atmiya University Rajkot

22) **paste**:- paste command is used to paste the content from one file to another file. It is also used to set column format for each line.

Syntax :- paste [option] file

Description :-

- Paste prints lines consisting of sequentially corresponding lines of each specified file. In the output the original lines are separated by TABs. The output line is terminated with a newline.

-d	Specify of a list of delimiters.
-s	Paste one file at a time instead of in parallel.
File	A path name of an input file. If - is specified for one or more of the file s, the standard input will be used.

Example:-

$ cat > a
Unix
Linux
Windows
$ cat > b
Dedicated server
Virtual server
$ paste a b
Unix Dedicated server
Linux Virtual server
Windows
$ paste -d"|" a b
Unix|Dedicated server
Linux|Virtual server
Windows|
$ paste –s a b
Unix Linux Windows
Dedicated server Virtual server
$ paste –s –d”,” a b
Unix,Linux,Windows
Dedicated server,Virtual server

23) **more**:- Displays text one screen at a time.

Syntax :- more [options] filename

Description :-

- More command displays its output a page at a time. For example we are having a

Atmiya University Rajkot

big file with thousands of records and we want to read that file then we should use more command. Consider a file named employees then we will use following command to read its contents a page at a time.

-c	Clear screen before displaying.
-e	Exit immediately after writing the last line of the last file in the argument list.
-n	Specify how many lines are printed in the screen for a given file.
+n	Starts up the file from the given number.

Example:-

$ more -c myfile.txt

- Clears the screen before printing the file .

$ more -3 myfile.txt

- Prints first three lines of the given file. Press Enter to display the file line by line.

$ more +/"hope" myfile.txt

- Display the contents of file myfile.txt, beginning at the first line containing the string "hope".

24) **cmp**:- It compares two files and tells you which line numbers are different.

Syntax : - cmp [options..] file1 file2

Description :-

- Let's create a file named os2. And use cmp command to compare os and os1files.

- c	Output differing bytes as characters.
- l	Print the byte number (decimal) and the differing byte values (octal) for each difference.
- s	Prints nothing for differing files, return exit status only.
- c	Output differing bytes as characters.

Example:-

$ cat file1
memory
process
files
$ cat > file2
memory
process
files mgmt
$ cmp file1 file2
File1 file2 differ: char 21, line 3

- The two files are compared byte by byte and the location of the first mismatch is echoed to the screen. cmp doesn't bother about possible subsequent mismatches.

Atmiya University Rajkot

25) **comm**:- compare two sorted files line by line
Syntax:- comm [option]... FILE1 FILE2
Description :-

- Compare sorted files FILE1 and FILE2 line by line.
- Requires two sorted files and lists differing entries in different columns. produces three text columns as output:
  1 Lines only in file1.
  2 Lines only in file2.
  3 Lines in both files.

-1	suppress lines unique to FILE1
-2	suppress lines unique to FILE2
-3	suppress lines that appear in both files

- For example let's create two files named file1 and file2 with following data.
  $ cat > file1
  c.k.shukla
  chanchalsanghvi
  s.n.dasgupta
  sumit [1] + Stopped

  $ cat > file2
  anilaggarwal
  barunsengupta
  c.k.shukla
  lalit
- Now let's use comm. Command with these two files.
  $ comm file1 file2
  anilaggarwal
  barunsengupta
  c.k.shukla
  chanchalsanghvi
  lalit
  s.n.dasgupta
  sumit
- In the above output we can see that first column contains two lines unique to the first file and second column contains three lines unique to the second file and the third column contains two lines common to both the files. Comm. Can produce the

Atmiya University Rajkot

single column output using 3 options -1,-2 or -3. To drop a particular column, simply use its column number as a prefix.

Example :-

$ cat file1
f1.c
f2.c
f3.c
f4.c
f5.c

$ cat file2
f1.c
f3.c
f4.c
f6.c
f7.c

- Now, When you run the comm command on these files, this is what you get:

$ comm file1 file2
f1.c
f2.c
f3.c
f4.c
f5.c
f6.c
f7.c

- The output is split in 3 columns. Column1 indicates files which are unique in file1, column 2 indicates files unique to file2. Column 3 indicates files common between them. comm command provides some real good options with which you can filter the output better.
- Now, say you want to find out only the list of files which were there in the older version but not in the newer version:

$ comm -23 file1 file2
f2.c
f5.c

- The option -23 indicates to remove the second and third columns from the comm command output, and hence we are left with only the first column which is the files unique in file1.
- Similarly, to find out the list of files which were not there in the old version, but has been added in the new version:

Atmiya University Rajkot

$ comm -13 file1 file2
f6.c
f7.c

- As explained above, -13 option tells to remove the first and third columns from the comm output.
- Finally, to know the list of files which have been retained, or common in both the versions:

$ comm -12 file1 file2
f1.c
f3.c
f4.c

- When you apply comm command on files, the files should be sorted. This command works only on sorted files.

26) **diff**:- It is used to find differences between two files.

Syntax :- diff [options..] fileone filetwo

Description :-

- Diff is the third command that can be used to display file differences. Unlike its fellow members ,cmp and comm. , it also tells us which lines in one file have to be changed to make the two files identical.

-b	Ignore any changes which only change the amount of whitespace (such as spaces or tabs).
-w	Ignore whitespace entirely.
-B	Ignore blank lines when calculating differences.
-y	Display output in two columns.
-i	Ignore changes in case.consider upper- and lower-case letters equivalent.

Example:-

$ cat 1.txt
aaa
bbb
ccc
ddd
eee
fff
ggg
$ cat 2.txt
bbb
c c
ddd
eee
fff

Atmiya University Rajkot

ggg
hhh
$ diff 1.txt 2.txt
1d0
< aaa
3c2
< ccc

> c c
7a7
> hhh

- Lines like "1d0" and "3c2" are the coordinates and types of the differences between the two compared files, while lines like "< aaa" and "> hhh" are the differences themselves.
- diff change notation includes 2 numbers and a character between them. Characters tell you what kind of change was discovered:
  - **d – a line was deleted**
  - **c – a line was changed**
  - **a – a line was added**
- Number to the left of the character gives you the line number in the original (first) file, and the number to the right of the character tells you the line number in the second file used in comparison.
- So, looking at the two text files and the diff output above, you can see what happened:
- **1d0**
  < aaa
- This means that 1 line was deleted. < aaa suggests that the aaa line is present only in the original file.
  3c2
  < ccc

  > c c
- And this means that the line number 3 has changed. You can see how this confirms that in the first file the line was "ccc", and in the second it now is "c c".
  7a7
  > hhh
- Finally, this confirms that one new line appeared in the second file, it's "hhh" in the line number 7.

Atmiya University Rajkot

27) **chmod**:- chmod command allows you to alter / Change access rights to files and directories.

Syntax:- chmod [options] [MODE] FileName

Description :-

- chmod command is used to set the permissions of one or more files for all three categories of users (user,group and others). It can be run only by the user and super user. Command can be used in two ways. Let's first take a look at the abbreviations used by chmod command.

Category		Operation		Permission	
u	User	+	Assigns permission	r	Read permission
g	Group	-	Removes permission	w	Write permission
o	Others	=	Assigns absolute	x	Execute permission

File Permission :

#	File Permission
0	none
1	execute only
2	write only
3	write and execute
4	read only
5	read and execute
6	read and write
7	set all permissions

Relative permissions

- When changing permissions in a relative manner, chmod only changes the permissions specified in the command line and leaves the other permissions unchanged. In this mode it uses the following syntax:
- let's first check the permission of file shortlist. It shows read/write permission. Let's assign execute permission to this file for owner.

  $ ls –l

  -rw-r--r—1 shortlist None 241 Feb 21 04:02

  $ chmod u+x shortlist

  $ ls -l

  -rwxr--r-- 1 shortlist None 241 Feb 21 04:02
- Here chmod uses expression u+x means – u shows user category that is user, + shows we need to assign the permission and x shows execute permission. Sameway we can assign other permissions.

Atmiya University Rajkot

Absolute permissions

- Sometimes you don't need to know what a file's current permissions are, but want to set all nine permission bits explicitly. The expression used by chmod here is a string of three octal numbers. Each type of permission is assigned a number as shown:
  Read permission-4
  Write permission-2
  Execute permission -1
- For each category we add numbers that represent the assigned permission. For instance , 6 represents read and write permission , and 7 represents all permissions.

Example :

$ chmod 666 myfile or(chmod u=rw,g=rw,o=rwmyfile) shortlist

- Shows read and wrie (4 +2) permissions for all three types of users.

28) **chown**:- Command for system V that changes the owner of a file.
Syntax :- chown [options] newowner filename/directoryname
Description:-

-R	Change the permission on files that are in the subdirectories of the directory that you are currently in.
-c	Change the permission for each file.
-f	Prevents chown from displaying error messages when it is unable to change the ownership of a file.

Example :-

$ ls -l demo.txt
-rw-r--r-- 1 root root 0 Jan 31 05:48 demo.txt
$ chownvivek demo.txt
-rw-r--r-- 1 vivek root 0 Jan 31 05:48 demo.txt

29) **chgrp**:- chgrp command is used to change the group of the file or directory. This is an admin command. Root user only can change the group of the file or directory.
Syntax:- chgrp [options] newgroup filename/directoryname
Description:-

-R	Change the permission on files that are in the subdirectories of the directory that you are currently in.
-c	Change the permission for each file.
-f	Force. Do not report errors.

Example :-

$ ls -l demo.txt
-rw-r--r-- 1 root root 0 Jan 31 05:48 demo.txt

Atmiya University Rajkot

$ chgrp vivek demo.txt
-rw-r--r-- 1 root vivek 0 Jan 31 05:48 demo.txt

30) **file**:- file command tells you if the object you are looking at is a file or a directory.
Syntax:- file [options] directoryname/filename
Description:-

- File command is used to determine the type of file, especially of an ordinary file. We can use it with one or more filenames as arguments. For example we can use file command to check the type of the os1 file that we have created.
  $ file os1
  os1: short english text

31) **finger**:- finger command displays the user's login name, real name, terminal name and write status (as a "*" after the terminal name if write permission is denied), idle time, login time, office location and office phone number.
Syntax:- finger [username]
Description :-

-l	Force long output format
-s	Force short output format

Example :-

$ finger rahul
Login: abc Name: (null)
Directory: /home/abc Shell: /bin/bash
On since Mon Nov 1 18:45 (IST) on :0 (messages off)
On since Mon Nov 1 18:46 (IST) on pts/0 from :0.0
New mail received Thu Feb 7 10:33 2015 (IST)
Unread since Mon Feb 8 12:59 2016 (IST)
No Plan.

32) **sleep**:- Delay for a specified amount of time
Syntax :- sleep NUMBER[SUFFIX]
Description:-

- The sleep command pauses for an amount of time defined by NUMBER.
- SUFFIX may be "s" for seconds (the default), "m" for minutes, "h" for hours, or "d" for days.

Example :-

- To sleep for 5 seconds, use:
  $ sleep 5
- To sleep for 2 minutes, use:

Atmiya University Rajkot

$ sleep 2m

- To sleep for 3 hours, use:
  $ sleep 3h
- To sleep for 5 days, use:
  $ sleep 5d

33) **kill**:- kill command is used to kill the background process.
Syntax:- kill [options] pid
Description :-

- The command kill sends the specified signal to the specified process or process group.
- If no signal is specified, the TERM signal is sent. The TERM signal will kill processes which do not catch this signal.
- For other processes, it may be necessary to use the KILL (9) signal, since this signal cannot be caught.

pid.	Specify the list of processes that kill should signal
-s	send the specified signal to the process
-l	list all the available signals.
-9	Force to kill a process.

34) **users** :- users command displays currently logged in users.
Syntax:- users
Output:-

$ users
dietstaff dietstaff

35) **ps**:- It is used to report the process status. ps is the short name for Process Status.
Syntax:- ps [options]

Description :-

-a	List information about all processes most frequently requested: all those except process group leaders and processes not associated with a terminal
-A	List information for all processes. Identical to -e, below
-f	Generate a full listing
-j	Print session ID and process group ID
-l	Generate a long listing

Example :-

$ps

Atmiya University Rajkot

PID TTY TIME CMD
291 console 0:00 bash

36) **ln** :- ln command is used to create link to a file (or) directory. It helps to provide soft link for desired files.

Syntax:- ln [options] existingfile(or directory)name newfile(or directory)name

Description:-

What Is A Link?

- A link is an entry in your file system which connects a filename to the actual bytes of data on the disk. More than one filename can "link" to the same data. Here's an example. Let's create a file named file1.txt:
  $ echo "This is a file." > file1.txt
- This command echoes the string "This is a file". Normally this would simply echo to our terminal, but the > operator redirects the string's text to a file, in this case file1.txt
- When this file was created, the operating system wrote the bytes to a location on the disk and also linked that data to a filename, file1.txt so that we can refer to the file in commands and arguments.
- If you rename the file, the contents of the file are not altered; only the information that points to it.
- The filename and the file's data are two separate entities.

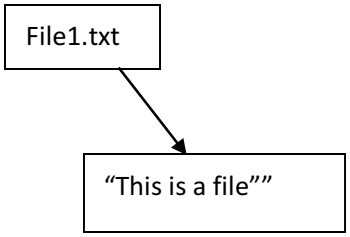

- What the link command does is allow us to manually create a link to file data that already exists.
- So, let's use link to create our own link to the file data we just created. In essence, we'll create another file name for the data that already exists.
  $ link file1.txt file2.txt
- The important thing to realize is that we did not make a copy of this data. Both filenames point to the same bytes of data on the disk. Here's an illustration to help you visualize it:

Atmiya University Rajkot

- If we change the contents of the data pointed to by either one of these files, the other file's contents are changed as well. Let's append a line to one of them using the >>operator:
  $ echo "It points to data on the disk." >> file1.txt
- Now let's look at the contents of file1.txt:
  $ cat file1.txt
  This is a file.
- now let's look at the second file, the one we created with the link command.
  $ cat file2.txt
  This is a file.
- ln, by default, creates a hard link just like link does. So this ln command:
  $ ln file1.txt file2.txt
- It is the same as the following link command. Because, both commands create a hard link named file2.txt which links to the data offile1.txt.
  $ link file1.txt file2.txt
- However, we can also use ln to create symbolic links with the -s option. So the command:
  $ ln -s file1.txt file2.txt
- It will create a symbolic link to file1.txt named file2.txt. In contrast to our hard link example, here's an illustration to help you visualize our symbolic link:

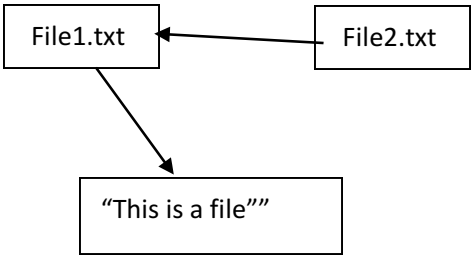

- You should also be aware that, unlike hard links, removing the file (or directory) that a symlink(symbolic linkl) points to will break the link. So if we create file1.txt:
  $ echo "This is a file." > file1.txt
- Now, create a symbolic link to it:
  $ ln -s file1.txt file2.txt
- we can cat either one of these to see the contents:

Atmiya University Rajkot

$ cat file1.txt
This is a file.
$ cat file2.txt
This is a file.

- But, if we remove file1.txt:
  $ rm file1.txt
- we can no longer access the data it contained with our symlink:
  $ cat file2.txt
  cat: file2.txt: No such file or directory

-s	Makes it so that it creates a symbolic link
-f	If the destination file or files already exist, overwrite them.

37) **head**:- head command is used to display the first ten lines of a file, and also specifies how many lines to display.
Syntax:- head [options] filename
Description:-

- Head command displays the top of the file. When used without an option , it displays the first ten lines of the file.

-n	To specify how many lines you want to display.
-n number	The number option-argument must be a decimal integer whose sign affects the location in the file, measured in lines.
-c number	The number option-argument must be a decimal integer whose sign affects the location in the file, measured in bytes.

Example :-
$ head myfile.txt

- Display the first ten lines of myfile.txt.
  $ head -15 myfile.txt
- Display the first fifteen lines of myfile.txt.
  $ head -c 20 myfile.txt
- Will output only the first twenty bytes (characters) of myfile.txt. Newlines count as a single character, so if head prints out a newline, it will count it as a byte.
  $ head -n 5K myfile.txt
- Displays the first 5,000 lines of myfile.txt.

38) **tail**:- tail command is used to display the last or bottom part of the file. By default it displays last 10 lines of a file.
Syntax :- tail [options] filename
Description:-

Atmiya University Rajkot

-l	To specify the units of lines.
-b	To specify the units of blocks.
-n	To specify how many lines you want to display.
-c number	The number option-argument must be a decimal integer whose sign affects the location in the file, measured in bytes.
-n number	The number option-argument must be a decimal integer whose sign affects the location in the file, measured in lines.

Example : -

$ tail index.txt

- It displays the last 10 lines of 'index.txt'.

$ tail -2 index.txt

- It displays the last 2 lines of 'index.txt'.

$ tail -n 5 index.txt

- It displays the last 5 lines of 'index.txt'.

$ tail -c 5 index.txt

- It displays the last 5 characters of 'index.txt'.

39) **sort**:- It is used to sort the lines in a text file.

Syntax:- sort [options] filename

-b	Ignores spaces at beginning of the line
-c	Check whether input is sorted; do not sort
-r	Sorts in reverse order
-u	If line is duplicated only display once
-r	Reverse the result of comparisons.

Example:-

$ cat > data.txt
apples
oranges
pears
kiwis
bananas
$ sort data.txt
apples
bananas
kiwis
oranges
pears

- Note that this command does not actually change the input file, data.txt. If you want to write the output to a new file, output.txt, redirect the output like this:

Atmiya University Rajkot

$ sort data.txt > output.txt

- it will not display any output, but will create the file output.txt with the same sorted data from the previous command. To check the output, use the cat command:

  $ cat output.txt
  apples
  bananas
  kiwis
  oranges
  pears
- You can also use the built-in sort option -o, which allows you to specify an output file:

  $ sort -o output.txt data.txt
- Using the -o option is functionally the same as redirecting the output to a file; neither one has an advantage over the other.

  Sorting In Reverse Order :
- You can perform a reverse-order sort using the -r flag. For example, the following command:

  $ sort -r data.txt
  pears
  oranges
  kiwis
  bananas
  apples

  Checking For Sorted Order
- If you just want to check to see if your input file is already sorted, use the -c option:

  $ sort -c data.txt
- If your data is unsorted, you will receive an informational message reporting the line number of the first unsorted data, and what the unsorted data is.

40) **find**:- Finds one or more files assuming that you know their approximate path.
Syntax :- find [options] path
Description :-

- Find is one of the powerful utility of Unix (or Linux) used for searching the files in a directory hierarchy

path	A path name of a starting point in the directory hierarchy
-maxdepth	Descend at most levels (a non-negative integer) levels of directories below the command line arguments.
-i	ignore the case in the current directory and sub-directories.

Atmiya University Rajkot

-size	Find file based on size

Example:-

$ find -name "sum.java"
./bkp/sum.java
./sum.java
$ find -iname "sum.java"
./SUM.java
./bkp/sum.java
./sum.java
$ find -maxdepth 1 -name "sum.java"
./sum.java

- Find Files Under Home Directory
- Find all the files under /home directory with name myfile.txt.
  $ find /home -name myfile.txt
  /home/myfile.txt
  $ find . -size 10M
- Display files whose size is exactly 10M
  $ find . -size +10M
- Display files larger than 10M size
  $ find -newer "sum.java"
- Display the files which are modified after the modification of a give file.
  $ find . -perm 777
- display the files based on the file permissions.
- This will display the files which have read, write, and execute permissions. To know the permissions of files and directories use the command **"ls -l".**
  $ find -name '*' -size +1000k
- The system would search for any file in the list that is larger than 1000k.

41) **uniq**:- Report or filter out repeated lines in a file.
Syntax:- uniq [option] filename
Description : -

-c	Precede each output line with a count of the number of times the line occurred in the input
-d	Suppress the writing of lines that are not repeated in the input
-D	Print all duplicate lines
-f	Avoid comparing first N fields
-i	Ignore case when comparing
-s	Avoid comparing first N characters.
-u	Prints only unique lines

Atmiya University Rajkot

-w	Compare no more than N characters in lines

Example:-

$ cat example.txt
Unix operating system
unix operating system
unix dedicated server
linux dedicated server

- The default behaviour of the uniq command is to suppress the duplicate line. Note that, you have to pass sorted input to the uniq, as it compares only successive lines.

  $ uniq example.txt
  unix operating system
  unix dedicated server
  linux dedicated server
- The -c option is used to find how many times each line occurs in the file. It prefixes each line with the count.

  $ uniq -c example.txt
  2 unix operating system
  1 unix dedicated server
  1 linux dedicated server
- You can print only the lines that occur more than once in a file using the -d option.

  $ uniq -d example.txt
  unix operating system
- The -D option prints all the duplicate lines.

  $ uniq -D example.txt
  unix operating system
  unix operating system

42) **tr**:- Translate characters.
Syntax:- tr [options] set1 [set2]
Description:-

-c	Complement the set of characters specified by string1
-d	Delete all occurrences of input characters that are specified by string1
-s	replaces repeated characters listed in the string1 with single occurrence
Set1	First string or character to be changed
set2	Second string or character to change the string1

Example:-

- Convert lower case letters to upper case
- The following tr command translates the lower case letters to capital letters in the

Atmiya University Rajkot

give string:
$ echo "linux dedicated server" | tr "[:lower:]" "[:upper:]"
LINUX DEDICATED SERVER
$ echo "linux dedicated server" | tr "[a-z]" "[A-Z]"
LINUX DEDICATED SERVER

- The -c option is used to replace the non-matching characters with another set of characters.
  $ echo "unix" | tr -c "u" "a"
  uaaa
- You can squeeze more than one occurrence of continuous characters with single occurrence. The following example squeezes two or more successive blank spaces into a single space.
  $ echo "linux server" | tr -s " "
  linux server
- The following example removes the word linux from the string.
  $ echo "linuxserver" | tr -d "linux"
  Server

43) **history**:- history command is used to list out the recently executed commands in the number line order.
Syntax:- history [options]
Description:-

- The history command performs one of several operations related to recently-executed commands recorded in a history list. Each of these recorded commands is referred to as an ``event''.

-c	clear the history list by deleting all of the entries.

Example :-

- To list the recently executed commands:
  $ history
- This command is used to list the history.
  To find specific command in history list:
  $ history | grep cd
  33 cd Pictures/
  37 cd ..
  39 cd Desktop/
  61 cd /usr/bin/
  68 cd
- This command is used to list only cd commands from history list.
  To copy history list to file

Atmiya University Rajkot

$ history -a history.txt

- This command is used to copy history list to history.txt file .

To Clear all history:

$ history -c

- This command can be used to clear all history from history list.

44) **write:-** Send a message to another user.

Syntax:- write person [ttyname]

Description:-

- The write utility allows you to communicate with other users, by copying lines from your terminal to theirs.
- When you run the write command, the user you are writing to gets a message of the format:
  Message from yourname@yourhost on yourtty at hh:mm ...
- Any further lines you enter will be copied to the specified user's terminal. If the other user wants to reply, they must run write as well.
- When you are done, type an end-of-file or interrupt character. The other user will see the message 'EOF' indicating that the conversation is over.

person	If you wish to talk to someone on your own machine, then person is just the person's login name. If you wish to talk to a user on another host, then person is of the form 'user@host'.
ttyname	If you wish to talk to a user who is logged in more than once, the ttyname argument may be used to indicate the appropriate terminal name, where ttyname is of the form 'ttyXX' or 'pts/X'.

45) **grep**:- It selects and prints the lines from a file which matches a given string or pattern.

Syntax:- grep [options] pattern [file]

Description:-

- This command searches the specified input fully for a match with the supplied pattern and displays it.
- While forming the patterns to be searched we can use shell match characters, or regular expressions.
- Let us begin with the simplest example of usage of grep.

-i	Ignore case distinctions
-v	Invert the sense of matching, to select non-matching lines.
-w	Select only those lines containing matches that form whole words.
-x	Select only matches that exactly match the whole line.
-c	print a count of matching lines for each input file.

Example :-

Atmiya University Rajkot

$ grep "Error" logfile.txt

- This searches for the string "Error" in the log file and prints all the lines that has the word "Error".

$ grep "string" file1 file2

- Searching for a string in multiple files.

$ grep -i "UNix" file.txt

- The -i option enables to search for a string case insensitively in the give file. It matches the words like "UNIX", "Unix", "unix".

$ grep -w "world" file.txt

- By default, grep matches the given string/pattern even if it found as a substring in a file. The -w option to grep makes it match only the whole words.

$ grep -c "sting" file.txt

- We can find the number of lines that matches the given string/pattern

$ grep -l "string" *

- We can just display the files that contain the given string/pattern.

$ grep -n "string" file.txt

- We can make the grep command to display the position of the line which contains the matched string in a file using the -n option

46) **pwd:-**Displaying your current directory name (Print working directory).
Syntax:-pwd [options]
Description:-

- At the time of logging in user is placed in the specific directory of the file system. You can move around from one directory to another, but any point of time, you are located in only one directory. This directory is known as your current directory. pwd command tells your current directory.

Example:-

$ pwd
/home/abc

47) **wc:-** Word Count (wc) command counts and displays the number of lines, words, character and number of bytes enclosed in a file.
Syntax: - wc [*options*] [filename]
Description:-

- This command counts lines, words and characters depending on the options used. It takes one or more filenames as its arguments and displays four-columnar output. For example let's read our os1 file. And we use wc command with that filename.

-l	print the newline counts.
-w	print the word counts.

Atmiya University Rajkot

-c	print the byte counts.
-m	print the character counts.
-L	print the length of the longest line.

Example :-

$cat myfile.txt
Red Hat
CentOS
Fedora
Debian
Scientific Linux
OpenSuse
Ubuntu
Xubuntu
Linux Mint
Pearl Linux
Slackware
Mandriva

- The 'wc' command without passing any parameter will display a basic result of "myfile.txt' file. The three numbers shown below are 12 (number of lines), 16 (number of words) and 112 (number of bytes) of the file.
  $wc myfile.txt
  12 16 112 myfile.txt
- To count number of newlines in a file use the option '-l', which prints the number of lines from a given file. Say, the following command will display the count of newlines in a file. In the output the first filed assigned as count and second field is the name of file.
  $wc -l myfile.txt
  12 myfile.txt
- Using '-w' argument with 'wc' command prints the number of words in a file. Type the following command to count the words in a file.
  $wc -w myfile.txt
  16 myfile.txt
- When using options '-c' and '-m' with 'wc' command will print the total number of bytes and characters respectively in a file.
  $wc -c myfile.txt
  112 myfile.txt
- The 'wc'command allow an argument '-L', it can be used to print out the length of

Atmiya University Rajkot

longest (number of characters) line in a file. So, we have the longest character line ('Scientific Linux') in a file.

$wc -L myfile.txt

16 myfile.txt

48) **man**:- man command which is short for manual, provides in depth information about the requested command (or) allows users to search for commands related to a particular keyword.

Syntax:- man commandname [options]

Description :-

-a	Print a one-line help message and exit.
-k	Searches for keywords in all of the manuals available.

Example:-

$ man mkdir

- Display the information about mkdir command

49) **| (Pipeline command)**:- Used to combine more than one command. Takes output of 1st command as input of 2nd command.

Syntax:- commmand1| command2|……

Example:-

$ls -l | grep "Feb"

```
-rw-r--r-- 1    dietstaffdietstaff     336    Feb 19 14:41 calc1.sh
-rw-r--r—1   dietstaffdietstaff     410     Feb 19 14:28 calc.sh
drwxr-xr-x 7 dietstaffdietstaff     4096 Feb 24 09:04 Desktop
drwxr-xr-x 7 dietstaffdietstaff     12288Feb 26 07:44 Downloads
drwxr-xr-x 3 dietstaffdietstaff     4096 Feb 26 08:55 lab
drwxr-xr-x 2 dietstaffdietstaff     4096 Feb 24 08:00 shellscript
-rw-r--r—1   dietstaffdietstaff     81       Feb 24 12:34 temp3.sh
```

Explain the basic system administration commands of unix

1) **date** : - Prints or sets the date and time.

Syntax :- date[options] [+format] [date]

Description :-

- Display the current date with current time, time zone.
- The command can also be used with suitable format specifies as arguments. Each format is preceded by a + symbol, followed by the % operator, and a single character describing the format.

Format

%a	Abbreviated weekday(Tue).

Atmiya University Rajkot

%A	Full weekday(Tuesday).
%b	Abbreviated month name(Jan).
%B	Full month name(January).
%c	Country-specific date and time format..
%D	Date in the format %m/%d/%y.
%j	Julian day of year (001-366).
%p	String to indicate a.m. or p.m.
%T	Time in the format %H:%M:%S.
%t	Tab space.
%V	Week number in year (01-52); start week on Monday.

Example:-

$ date
Fri Feb 19 09:55:15 IST 2016
$ date +%m
02
$ date +%h
Feb
$ date +%y
16
$ date +"Date is %D %t Time is %T"
date is 19/02/16 Time is 10:52:34

- To know the week number of the year,
  $ date -V
  11
- To set the date,
  $ date -s "10/08/2016 11:37:23"
- The above command will print Wed Oct 08 11:37:23 IST 2016

2) **wall :-** send a message to everybody's terminal.

Syntax :- wall [message]

- Wall sends a message to everybody logged in with their mesg(1) permission set to yes. The message can be given as an argument to *wall*, or it can be sent to *wall*'s standard input. When using the standard input from a terminal, the message should be terminated with the EOF key (usually Control-D).
- The length of the message is limited to 20 lines.

Example : -

$sudo wall message.txt

- Using the sudo command to run wall as the superuser, sends the contents ofmessage.txt to all users.

ulimit : Setting limits on file size

Atmiya University Rajkot

Syntax: - ulimit [limit]

Description :-

- The ulimit command imposes a restriction on the maximum size of the file that a user is permitted to create , so that there is less wastage of disk space.

3) **passwd**:- It is used to change your password.

Syntax:- passwd

Description :-

- Passwd changes the password or shell associated with the user given by name or the current user if name is omitted.
- First user has to insert current password. Then new password will be asked followed by confirm new password field.
- passwd command can also be used to change the home directory where the path stands for the home directory.

4) **suid : -** set user id.

Description :-

- suid (Set owner User ID up on execution) is a special type of file permissions given to a file.
- Normally in Linux/Unix when a program runs, it inherits access permissions from the logged in user.
- suid is defined as giving temporary permissions to a user to run a program/file with the permissions of the file owner rather that the user who runs it.
- In simple words users will get file owner's permissions as well as owner UID and GID when executing a file/program/command.

Example:-

$ chmod u+s a.out

$ ls –l a.out

-rw**s**r-xr-rw 1 dietstaff dietstaff 121 Feb 21 11:18 a.out

Atmiya University Rajkot

1) Write a shell script to scans the name of the command and executes it.

Program :-

```
echo "enter command name"
read cmd
$cmd
```

Output :-

```
enter command name
cal
February 2016
Su Mo Tu We Th Fr Sa
    1  2  3  4  5  6
 7  8  9 10 11 12 13
14 15 16 17 18 19 20
21 22 23 24 25 26 27
28 29
```

2) Write a shell script Which works like calculator and performs below operations Addition , Subtract ,Division ,Multiplication

Program :-

i) using if..elif statement

```
echo " Enter one no."
read n1
echo "Enter second no."
read n2

echo  "1.Addition"
echo "2.Subtraction"
echo "3.Multiplication"
echo "4.Division"
echo "Enter your choice"
read ch
if [ $ch = "1" ]
then
   sum=`expr $n1 + $n2`
    echo "Sum ="$sum
elif [ $ch = "2" ]
then
      sum=`expr $n1 - $n2`
    echo "Sub = "$sum
elif [ $ch = "3" ]
then
```


Atmiya University Rajkot

```
   sum=`expr $n1 \* $n2`
    echo "Mul = "$sum
elif [ $ch = "4" ]
then
   sum=`expr $n1 / $n2`
    echo "Div = "$sum
fi
```

Output :-

```
Enter one no.
32
Enter second no.
12
1.Addition
2.Subtraction
3.Multiplication
4.Division
Enter your choice
2
Sub = 20
```

ii) using while loop and switch statement

```
i="y"
while [ $i = "y" ]
do
echo " Enter one no."
read n1
echo "Enter second no."
read n2
echo  "1.Addition"
echo "2.Subtraction"
echo "3.Multiplication"
echo "4.Division"
echo "Enter your choice"
read ch
case $ch in
   1)sum=`expr $n1 + $n2`
   echo "Sum ="$sum;;
   2)sum=`expr $n1 - $n2`
   echo "Sub = "$sum;;
   3)sum=`expr $n1 \* $n2`
```

```
    echo "Mul = "$sum;;
   4)sum=`expr $n1 / $n2`
   echo "Div = "$sum;;
   *)echo "Invalid choice";;
esac
echo "Do u want to continue ? y/n"
read i
if [ $i != "y" ]
then
   exit
fi
done
```

Output :-

```
Enter one no.
32
Enter second no.
22
1.Addition
2.Subtraction
3.Multiplication
4.Division
Enter your choice
2
Sub = 10
Do u want to continue ? y/n
N
```

3) Write a shell script to print the pyramid structure for the given number.

Program :-

```
echo "enter the number"
read n
printf "\n"
for((i=1;i<=$n;i++))
do
   for((j=1;j<=$i;j++))
do
   printf "$j"
done
   printf "\n"
done
```


Atmiya University Rajkot

Output :-

```
enter the number
4
1
12
123
1234
```

4) **Write a shell script to find the largest among the 3 given numbers.**

Program :-

```
clear
echo "Enter first number: "
read a
echo "Enter second number: "
read b
echo "Enter third number: "
read c

if [ $a -ge $b -a $a -ge $c ]
then
        echo "$a is largest integer"
elif [ $b -ge $a -a $b -ge $c ]
then
        echo "$b is largest integer"
elif [ $c -ge $a -a $c -ge $b ]
then
        echo "$c is largest integer"
fi
```

Output :-

```
Enter first number:
22
Enter second number:
33
Enter third number:
42
44 is largest integer
```

5) **Write a shell script to find factorial of given number n.**

Program :-

```
clear
```


Atmiya University Rajkot

```
fact=1
echo "Enter number to find factorial : "
read n
a=$n
#if enter value less than 0
if [ $n -le 0 ]
then
echo "invalid number"
exit
fi
#factorial logic
while [ $n -ge 1 ]
do
  fact=`expr $fact \* $n`
  n=`expr $n - 1`
done
echo "Factorial for $a is $fact"
```

Output :-

Enter number to find factorial :
5
Factorial for 5 is 120

6) Write a shell script to print all prime numbers from 1 to n.

Program :-

```
clear
echo "enter the range"
read n
echo "the prime no are:"
m=2
while [ $m -le $n ]
do
i=2
flag=0
while [ $i -le `expr $m / 2` ]
do
if [ `expr $m % $i` -eq 0 ]
then
flag=1
break
fi
```


Atmiya University Rajkot

```
i=`expr $i + 1`
done
if [ $flag -eq 0 ]
then
echo $m
fi
m=`expr $m + 1`
done
```

Output :-

```
enter the range
10
the prime no are
2
3
5
7
```

7) Write a shell script to reverse a number supplied by a user.

Program :-

```
if [ $# -eq 1 ]
      then
          if [ $1 -gt 0 ]
          then
             num=$1
             sumi=0
             while [ $num -ne 0 ]
             do
             lnum=`expr $num % 10`
             sumi=`expr $sumi \* 10 + $lnum`
             num=`expr $num / 10`
             done
             echo "Reverse of digits is $sumi of $1"
              else
             echo " Number is less than 0"
            fi
   else
         echo "Insert only one parameter "
   fi
```


Atmiya University Rajkot

Output :-
bash pr81.sh 123
Reverse of digits is 321 of 123

8) Write a shell script to find first n Fibonacci numbers like: 0 1, 1, 2, 3, 5, 13,…

Program :-

```
clear
 echo "How many number of terms to be generated ?"
 read n
 x=0
 y=1
 i=2
 echo "Fibonacci Series up to $n terms :"
 echo "$x"
 echo "$y"
 while [ $i -lt $n ]
 do
    i=`expr $i + 1 `
    z=`expr $x + $y `
    echo "$z"
    x=$y
    y=$z
 done
```

Output :-
How many numbers of terms to be generated?
5
Fibonacci Series up to 5 terms :
0
1
1
2
3

9) Write a shell script to check whether the given number is Perfect or not.

Program :-

```
echo Enter a number
read no
i=1
ans=0
while [ $i -le `expr $no / 2` ]
```


Atmiya University Rajkot

```
  do
     if [ `expr $no % $i` -eq 0 ]
     then
       ans=`expr $ans + $i`
     fi
     i=`expr $i + 1`
done
if [ $no -eq $ans ]
then
echo $no is perfect
else
echo $no is NOT perfect
fi
```

Output :-

```
Enter a number
6
6 is perfect

Enter a number
10
10 is NOT perfect
```

10) Write a shell script which displays a list of all files in the current directory to which you have read, write and execute permissions

Program :-

```
for File in *
do
if [ -r $File -a -w $File -a -x $File ]
then
echo $File
fi
done
```

Output :-

```
Desktop
Documents
Downloads
lab
Music
```


Atmiya University Rajkot

Pictures
Public
shellscript
Templates
Videos

11) Write a shell script that deletes all the files in the current directory which are 0 bytes in length.

Program :-

```
clear
find . -name "*" -size -1k –delete
echo “files deleted”
```

Output :-

files deleted

12) Write a shell script to check whether the given string is Palindrome or not.

Program :-

```
clear
echo "Enter the string:"
read str
echo
len=`echo $str | wc -c`
len=`expr $len - 1`
i=1
j=`expr $len / 2`
while test $i -le $j
do
k=`echo $str | cut -c $i`
l=`echo $str | cut -c $len`
if test $k != $l
then
echo "String is not palindrome"
exit
fi
i=`expr $i + 1`
len=`expr $len - 1`
done
echo "String is palindrome"
```


Atmiya University Rajkot

Output :-

```
Enter the string:
abba
String is palindrome

Enter the string:
abc
String is not palindrome
```

13) Write a shell script to display the digits which are in odd position in a given 5 digit number

Program :-

```
echo "Enter a 5 digit number"
read num
n=1
while [ $n -le 5 ]
do
a=`echo $num | cut -c $n`
echo $a
n=`expr $n + 2`
done
```

Output :-

```
Enter a 5 digit number
12345
1
3
5
```

14) Write a shell script to check given year is leap year or not.

Program :-

```
clear
echo "enter any year"
read num
if [ `expr $num % 4` -eq 0 ]
then
if [ `expr $num % 100` -eq 0 -a `expr $num % 400` -ne 0 ]
then
echo "Not a leap year"
else
echo "Leap year "
```


Atmiya University Rajkot

```
fi
else
echo "Not a leap year"
fi
```

Output :-

```
enter any year
2016
Leap year

enter any year
2100
Not a leap year
```

15) Write a shell script to find the value of one number raised to the power of another.

Program :-

```
echo "Input number"
read no
echo "Input power"
read power
counter=0
ans=1
while [ $power -ne $counter ]
do
      ans=`echo $ans \* $no | bc`
      counter=`echo $counter + 1 | bc`
done
echo "$no power of $power is $ans"
```

Output :-

```
Input number
5
Input power
3
5 power of 3 is 125
```

16) Write a shell script to display the following details in a pay list Pay slip details, House rent allowance, Dearness allowance, Provident fund. HRA is to be calculated at the rate of 20% of basic, DA at the rate of 40% of basic and PF at the rate of 10% of basic.

Program :-

Atmiya University Rajkot

```
i="y"
while [ $i = "y" ]
do
echo "Please enter your Basic:"
read basic
echo "PAY SLIP DETAILS"
echo "1. HOUSE RENT ALLOWANCE"
echo "2. DEARNESS ALLOWANCE"
echo "3. PROVIDENT FUND"
echo "your choice:"
read ch
case $ch in
1) hra=`expr $basic \* 20 / 100`
echo Your HOUSE RENT ALLOWANCE is Rs. $hra;;
2) da=`expr $basic \* 40 / 100`
echo Your DEARNESS ALLOWANCE is Rs. $da;;
3) pf=`expr $basic \* 10 / 100`
echo Your PPOVIDENT FUND is Rs. $pf;;
*) echo "Not a valid choice";;
esac
echo "Do u want to continue ?"
read i
if [ $i != "y" ]
then
   exit
fi
done
```

Output :-

```
Please enter your Basic:
1000
PAY SLIP DETAILS
1. HOUSE RENT ALLOWANCE
2. DEARNESS ALLOWANCE
3. PROVIDENT FUND
your choice:
1
Your HOUSE RENT ALLOWANCE is Rs. 200
Do u want to continue ?
```


Atmiya University Rajkot

17) Write a shell script to find sum of digits of a number.

Program :-

```
clear
echo "enter the number"
read n
sum=0
a=$n
while(($n >0))
do
x=`expr $n % 10`
sum=`expr $sum + $x`
n=`expr $n / 10`
done
echo "the sum of $a is $sum"
```

Output :-

```
enter the number
3355
the sum of 3355 is 16
```

18) Write a shell script that greets the user by saying Good Morning, Good Afternoon, and Good Evening according to the system time.

Program :-

```
clear
  #hours=`date|cut -c 12-13`
  hours=`date +%H`
  if [ $hours -le 12 ]
  then
      echo "Good Morning"
  elif [ $hours -le 16 ]
  then
      echo "Good Afternoon"
  elif [ $hours -le 20 ]
  then
  echo "Good Evening"
  else
  echo "Good Night"
   fi
```

Output :-

```
Good Afternoon
```


Atmiya University Rajkot

19) Write a shell script to generate mark sheet of a student. Take 3 subjects, calculate and display total marks, percentage and Class obtained by the student.

Program :-

```
Clear
echo "Enter the five subject marks for the student"
read s1 s2 s3
sum1=`expr $s1 + $s2 + $s3`
echo "Sum of 5 subjects are: " $sum1
per=`expr $sum1 / 3`
echo " Percentage: " $per
if [ $per -ge 60 ]
then
echo "You get Distinction"
elif [ $per -ge 50 ]
then
echo â€œYou get First classâ€•
elif [ $per -ge 40 ]
then
echo "You get Second class"
else
    echo "You get Fail"
fi
```

Output :-

```
Enter the five subject marks for the student
78 88 92
Sum of 5 subjects are:  258
 Percentage: 86
You get Distinction
```

20) Write a shell script that finds total no. of users and finds out how many of them are currently logged in.

Program :-

```
cat /etc/passwd>user.txt
set `wc -l user.txt`
log=`who|wc -l`
echo "There are $1 users in network "
echo "There are $log user loged in right now"
```

Output :-

```
There are 49 users in network
There are 2 user loged in right now
```


Atmiya University Rajkot

Que-1 Installation and Configuration of Linux - Using with Ubuntu

- Here is official installation steps for ubuntu
https://ubuntu.com/tutorials/tutorial-install-ubuntu-desktop#1-overview
https://ubuntu.com/tutorials/tutorial-install-ubuntu-server#1-overview (**server**)

- **steps for dual boot installation** (How To Install Ubuntu18.04 LTS Alongside Windows 10)

step 1: Make a backup [optional]

It is always nice to make a back up, just in case if you mess up with the system. There are numerous articles on the web to show you how to backup your system.

Step 2: Create a live USB/disk of Ubuntu

The next thing you need to do is to create a live USB or disk. I recommend Universal USB Installer to create a live USB of Linux OS in Windows

Read this screenshot tutorial on: how to create a live USB of Ubuntu Linux in Windows

Step 3: Make a partition where Ubuntu will be installed

If you have just one partition like this, you need to make some free space out of it for Linux. If you have several partitions of considerable size, use any of them except C drive because it may erase the data

To make a partition in Windows 8, go to Disk Management tool. You can find disk management tool by searching for 'disk' in Control Panel.

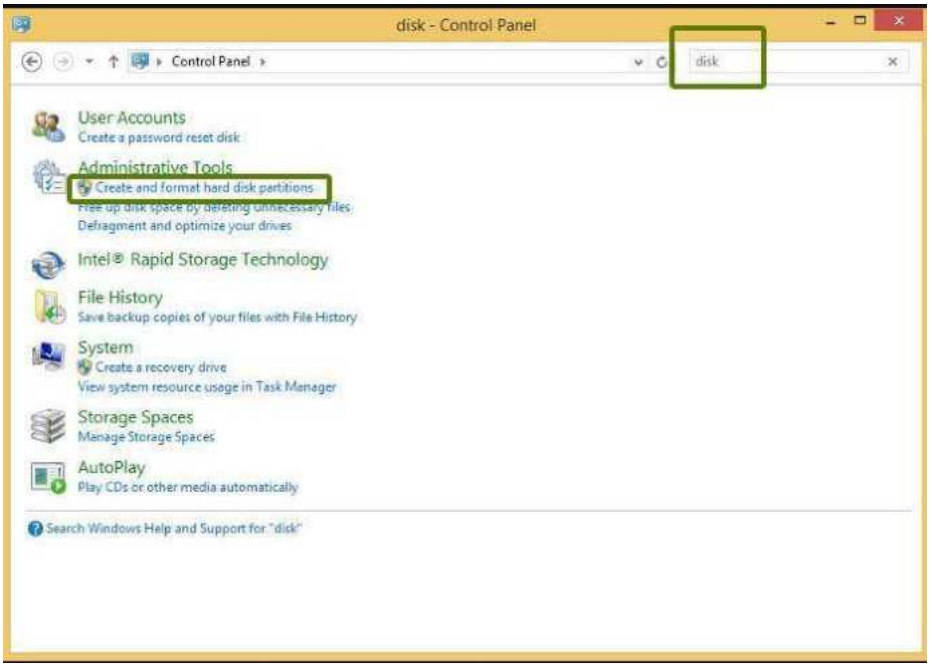

In the Disk Management tool, right click on the drive which you want to partition and select **shrink volume**. In my case, I shrank the C drive to make some free space:

Atmiya University Rajkot

Or if you have free space in your drive make it is not a window drive then delete particular volume

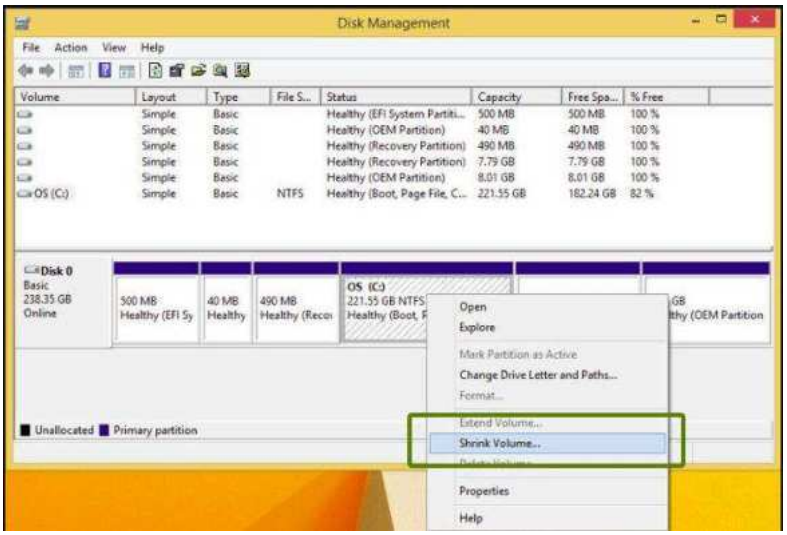

You can leave the free space as it is. We shall use it while installing Ubuntu.

Step 4: Disable fast startup in Windows [optional]

Windows 8 introduced a new feature called “fast startup” for quick boot. While it is not mandatory, it would be better to have it disabled.

Go to Control Panel > Hardware and Sound > Power Options > System Settings > Choose what the power buttons do and uncheck the Turn on fast startup box

Step 5: Disable secure boot in Windows 10 and 8.1

This is the most important step. The new **secure boot** feature of Windows 8, originally intended for security feature for root kit viruses, prevents dual booting of Windows with Linux. To dual boot Windows 8 with Linux, we must disable secure boot in UEFI.

Step 6: Installing Ubuntu along with Windows 10, 8.1

you have booted in the live USB, you will be presented with option to try or install Ubuntu.

You can also boot from any bootable media now you are entering in installation steps of ubuntu

Atmiya University Rajkot

Step 7 :select language option and click on install button

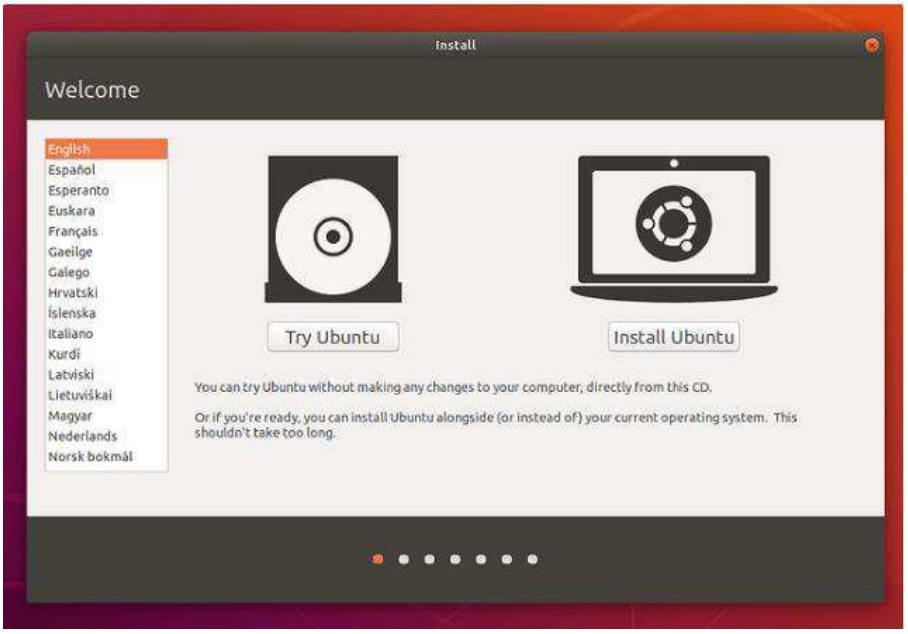

Step 8: Prepare to install Ubuntu

- ✓ you will first be asked to select your keyboard layout After selecting *Continue* you will be asked *What apps would you like to install to start with?*
- The two options are 'Normal installation' and 'Minimal installation'.
  - ✓ The first is the equivalent to the old default bundle of utilities, applications, games and media players — a great launchpad for any Linux installation.
  - ✓ The second takes considerably less storage space and allows you to install only what you need. Beneath the installation-type question are two checkboxes; one to enable updates while installing and another to enable third-party software.
- We advise enabling both Download updates and Install third-party software.
- Stay connected to the internet so you can get the latest updates while you install Ubuntu.
- If you are not connected to the internet, you will be asked to select a wireless network, if available. We advise you to connect during the installation so we can ensure your machine is up to date

Atmiya University Rajkot

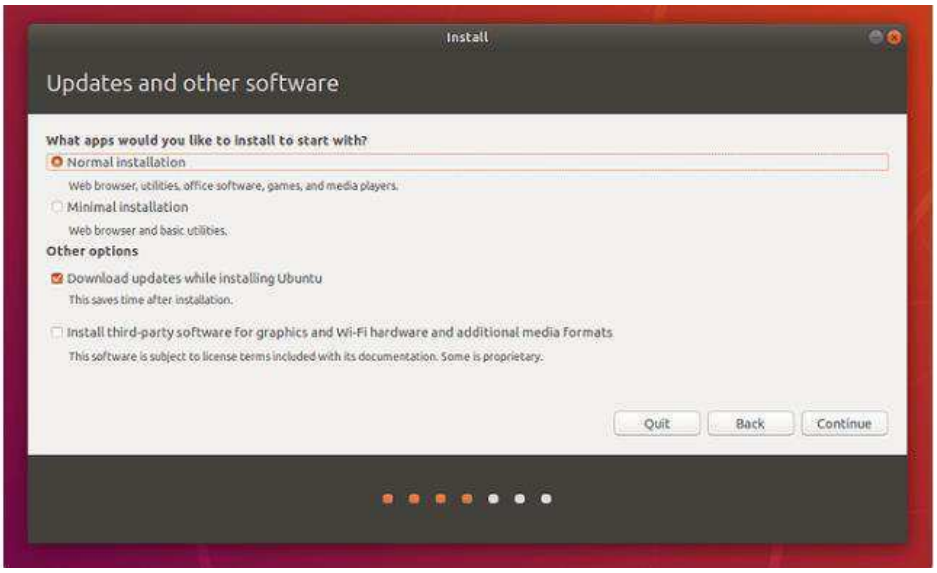

Step 9 : installation type:

The main screen which you should pay attention to is **Installation Type**. Choose **Something else** here:

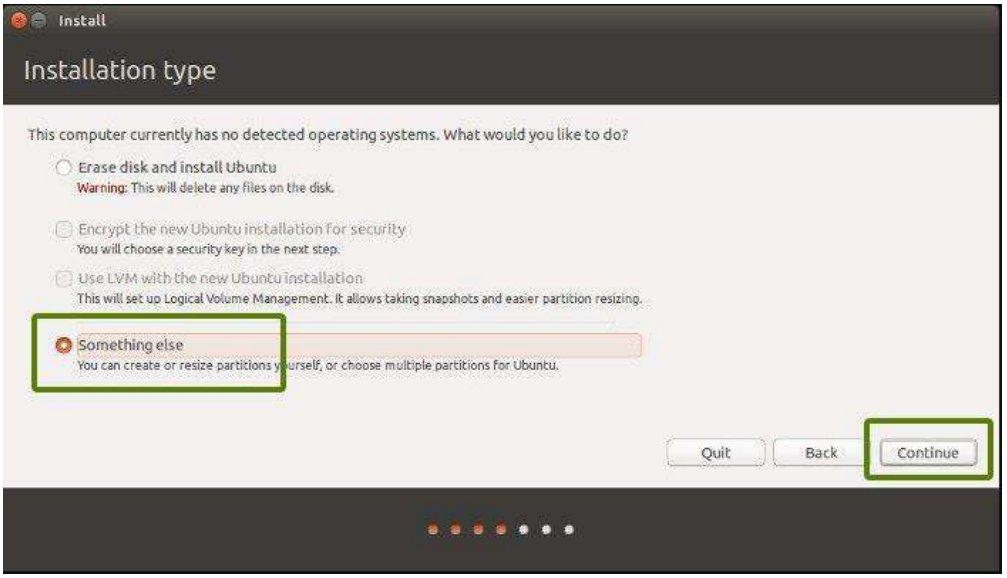

Remember we had created some free space beforehand? We shall use the free space to create Root, Swap and Home. Select the free space and click on the + sign to create partition .

Atmiya University Rajkot

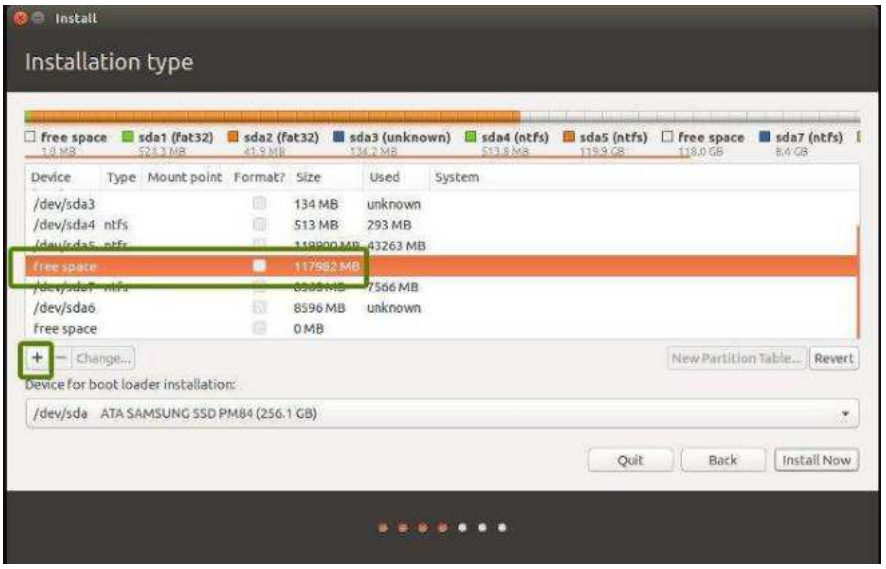

It will provide you with option to create Linux partition. We are creating the Root partition. Any thing above 20 GB is more than sufficient for it. Choose the size, select Ext 4 as file type and / (means root) as the mount point.there basic three partition root , boot and swap area

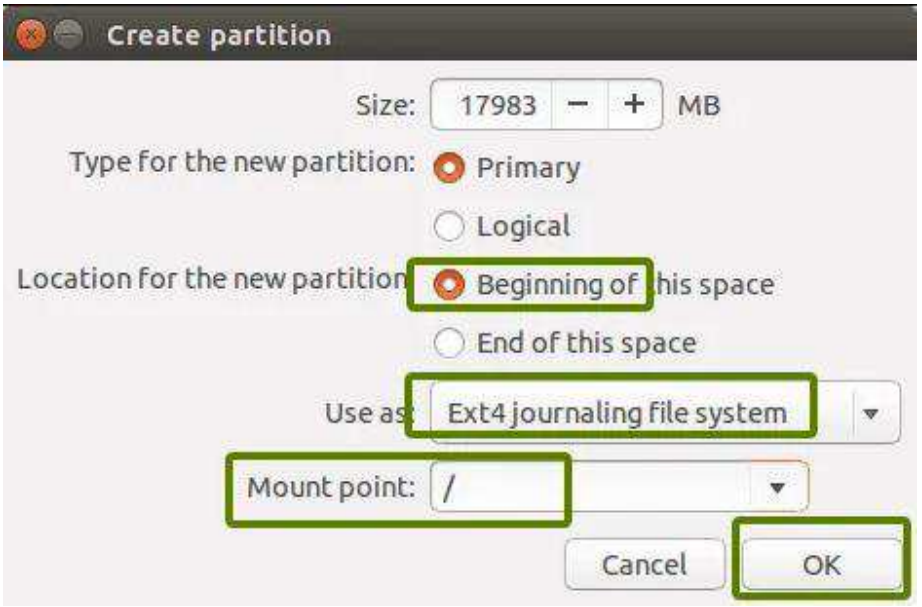

Clicking on OK in previous step will bring you to the partition screen. Next we will create swap. Like previously, click on the + sign again. This time use the file type as Swap area. Suggestible swap size is double of RAM

Atmiya University Rajkot

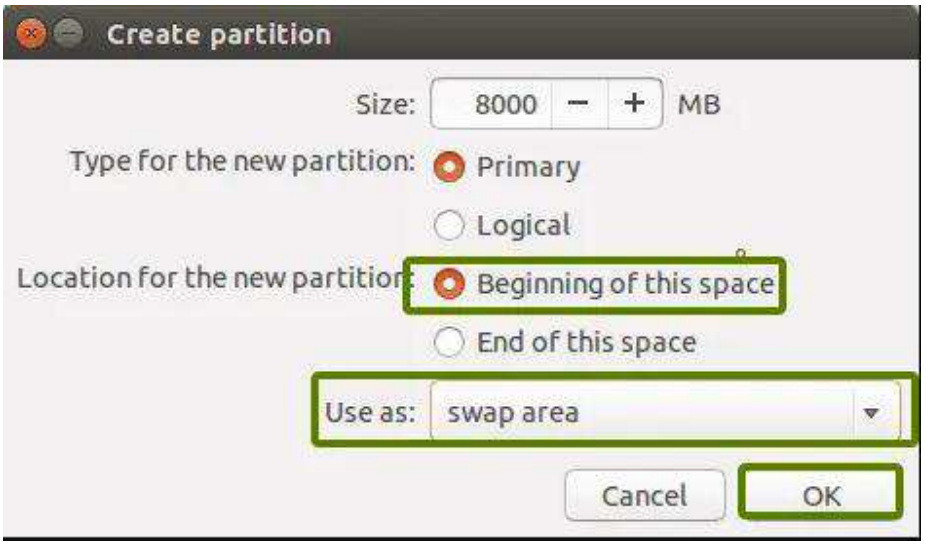

In similar fashion, boot and then create a Home partition. Allocate it maximum space (in fact allocate it rest of the free space) because this is where you'll save music, pictures and downloaded files.

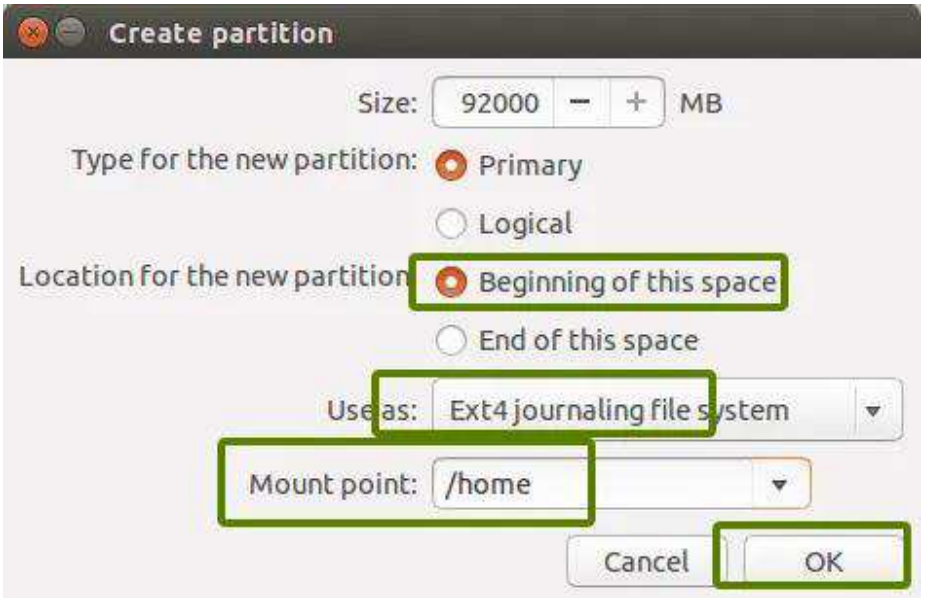

Once you are ready with Root, Swap and Home, click on **Install Now**:

Atmiya University Rajkot

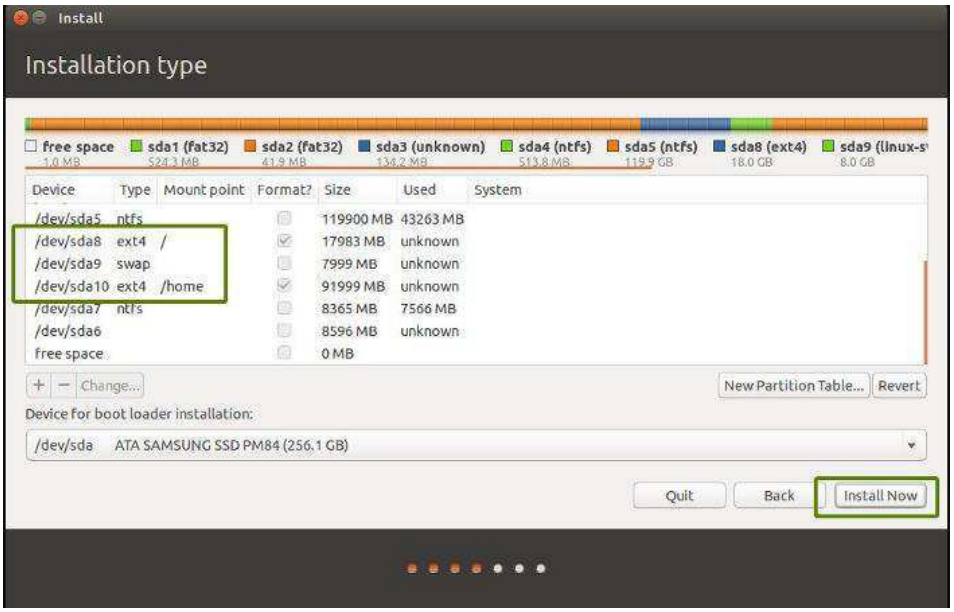

Step 10 Select Your Time zone:

Step 11 Provide your User Credentials

In the next screen you will be prompted to provide your user credentials. In this screen provide your name, computer name, username and the password to login into Ubuntu 18.04 LTS

Atmiya University Rajkot

Step 12 Start Installing Ubuntu 18.04 LTS:

The installation of Ubuntu 18.04 LTS starts now and will take around 5-10 mins depending on the speed of your computer,

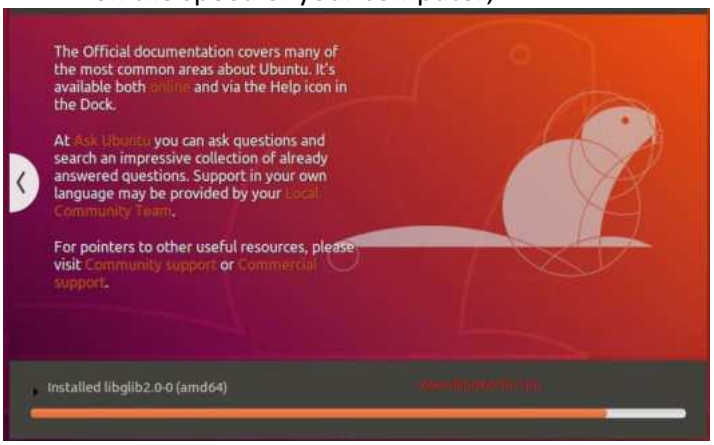

Step 13 Restart Your System:

Once the installation is completed, remove the USB/DVD from the drive and Click "Restart Now" to restart your system

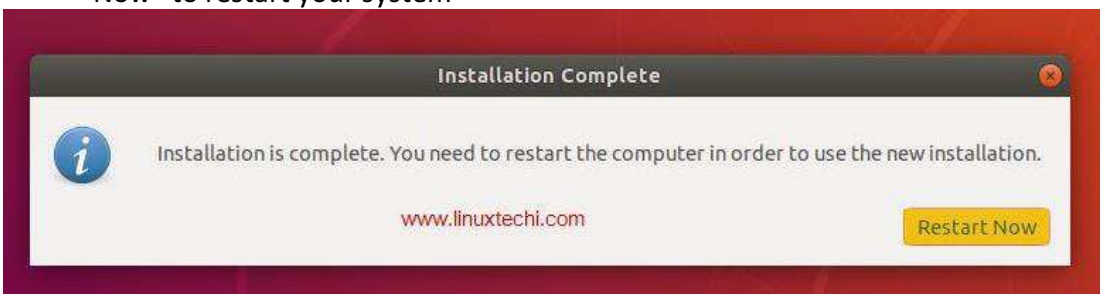

Atmiya University Rajkot

Step:14 Login to Your Ubuntu 18.04 desktop

Once your system has been rebooted after the installation then you will get the beneath login screen, enter the User name and password that you have set during installation (St

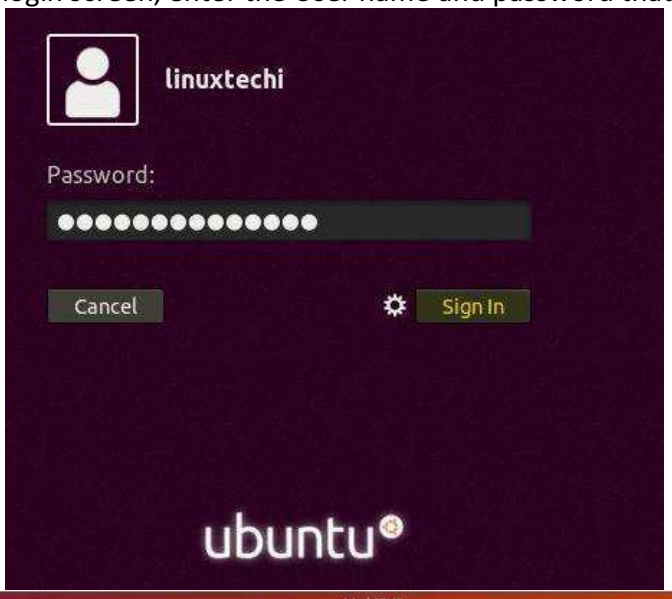

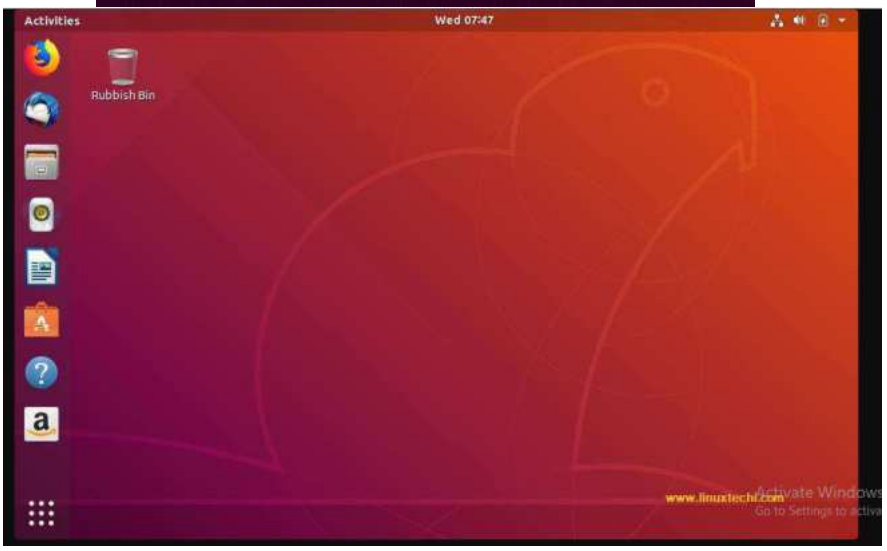

Atmiya University Rajkot

Que -2 Add a new user account

- ✓ You can add multiple user accounts to your computer. Give one account to each person in your household or company. Every user has their own home folder, documents, and settings.
  You need administrator privileges to add user accounts.

1. Open the Activities overview and start typing Users.
2. Click on Users to open the panel.
3. Press Unlock in the top right corner and type in your password when prompted.
4. Press the + button, below the list of accounts on the left, to add a new user account.
5. If you want the new user to have administrative access to the computer, select Administrator for the account type.
   Administrators can do things like add and delete users, install software and drivers, and change the date and time.
6. Enter the new user's full name. The username will be filled in automatically based on the full name. If you do not like the proposed username, you can change it.
7. You can choose to set a password for the new user, or let them set it themselves on their first login. If you choose to set the password now, you can press the icon to automatically generate a random password.
8. Click Add.

Screen :

- Open Terminal by pressing Crtl+Alt+T or Search 'Terminal' in Dash.
- Execute the following command in terminal
- sudo apt-get install gnome-system-tools
- Search "Users" in Dash

Atmiya University Rajkot

✓ Click and it will run the Users and Groups :

✓ Click Add Button to add new user

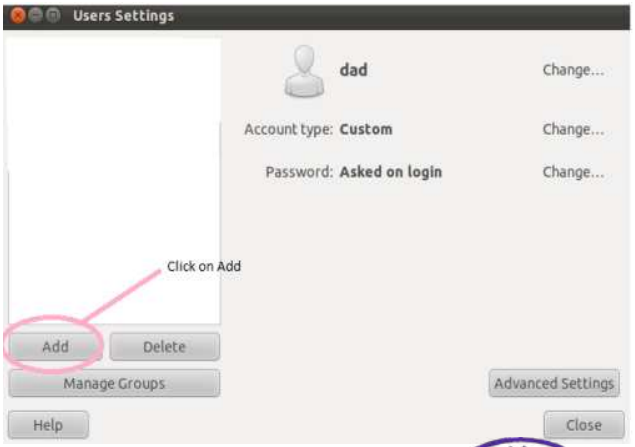

Atmiya University Rajkot

- **Steps to Create a New Sudo User command line:**

  - Log in to your server as the root user.
  - Use the adduser command to add a new user to your system.
    - #adduser username
  - Set and confirm the new user's password at the prompt. A strong password is highly recommended!
  - Set password prompts:
  - Enter new UNIX password:
  - Retype new UNIX password:
  - passwd: password updated successfully
  - User information prompts:
  - Changing the user information for username Enter the new value, or press ENTER for the default Full Name []:
  - Room Number []:
  - Work Phone []:
  - Home Phone []:
  - Other []:
  - Is the information correct? [Y/n]

Que-3 Install / Uninstall Software

✓ **Terminal:**

- # sudo apt-get install pakege _name
- #sudo apt-get remove pakege_name

✓ **GUI:**

Install additional applications

- An application is software that has a graphical user interface (GUI). The Ubuntu development team has chosen a default set of applications that we think makes Ubuntu very useful for most day-to-day tasks. However, you will certainly want to install more applications to make Ubuntu more useful to you. To install an application, you can use *Ubuntu Software*.
- Applications are available in two formats: snap packages and Debian packages. An application available as a snap package is from now on referred to as a *snap*. Some applications are available in both formats. In such a case in *Ubuntu Software* the snap will be listed first.
  You may also wish to install software that does not have a GUI. To install such software, you can use Synaptic. Note that *Synaptic* does not list snaps.

Atmiya University Rajkot

- **To install an application:**
  1. Click the *Ubuntu Software* icon in the Dock, or search for Software in the *Activities* search bar.
  2. When *Ubuntu Software* launches, search for an application, or select a category and find an application from the list.
  3. Select the application that you want to install and click Install.
  4. You will be asked to authenticate by entering your password. Once you have done that the installation will begin. The installation usually finishes quickly, but could take a while if you have a slow Internet connection.

- **To Remove an application**
  - An application is software that has a graphical user interface (GUI). You can use *Ubuntu Software* to remove applications that you no longer use.
  - Applications are available in two formats: snap packages and Debian packages. An application available as a snap package is from now on referred to as a *snap*. Some applications are available in both formats. In such a case in *Ubuntu Software* the snap will be listed first.
  - You may also wish to remove software that does not have a GUI. To remove such software, you can use Synaptic. Note that *Synaptic* does not list snaps.

  ✓ **To remove an application:**
  1. Click the *Ubuntu Software* icon in the Dock, or search for Software in the *Activities* search bar.
  2. When *Ubuntu Software* opens, click the Installed button at the top.
  3. Find the application that you want to remove by using the search box or by looking through the list of installed applications.
  4. Select the application and click Remove.
  5. Confirm that you want to remove the application.
  6. You will be asked to authenticate by entering your password. After you have done that, the application will be removed.

Atmiya University Rajkot

Que-4 FTP Server:

- ✓ File Transfer Protocol (FTP) is a TCP protocol for uploading and downloading files between computers. FTP works on a client/server model.
- ✓ The server component is called an *FTP daemon*.
- ✓ It continuously listens for FTP requests from remote clients.
- ✓ When a request is received, it manages the login and sets up the connection. For the duration of the session it executes any of commands sent by the FTP client

- **Access to an FTP server can be managed in two ways:**
  - ✓ Anonymous
  - ✓ Authenticated

  - ➢ In the **Anonymous** mode, remote clients can access the FTP server by using the default user account called "anonymous" or "ftp" and sending an email address as the password.
  - ➢ In the **Authenticated** mode a user must have an account and a password. This latter choice is very insecure and should not be used except in special circumstances. If you are looking to transfer files securely see SFTP in the section on OpenSSH-Server.
  - ➢ User access to the FTP server directories and files is dependent on the permissions defined for the account used at login. As a general rule, the FTP daemon will hide the root directory of the FTP server and change it to the FTP Home directory. This hides the rest of the file system from remote sessions.

- **vsftpd - FTP Server Installation**
  - ✓ vsftpd is an FTP daemon available in Ubuntu. It is easy to install, set up, and maintain. To install vsftpd you can run the following command:

```
sudo apt install vsftpd
```

- **Anonymous FTP Configuration**
  - ✓ By default vsftpd is *not* configured to allow anonymous download. If you wish to enable anonymous download edit /etc/vsftpd.conf by changing:

```
anonymous_enable=YES
```

  - ✓ During installation a *ftp* user is created with a home directory of `/srv/ftp`. This is the default FTP directory.
  - ✓ If you wish to change this location, to `/srv/files/ftp` for example, simply create a directory in another location and change the *ftp* user's home directory:

```
sudo mkdir -p /srv/files/ftp
sudo usermod -d /srv/files/ftp ftp
```

  - ✓ After making the change restart vsftpd:

```
sudo systemctl restart vsftpd.service\
```

  - ✓ Finally, copy any files and directories you would like to make available through anonymous FTP to `/srv/files/ftp`, or `/srv/ftp` if you wish to use the default.

Atmiya University Rajkot

- **User Authenticated FTP Configuration**
  - ✓ By default vsftpd is configured to authenticate system users and allow them to download files. If you want users to be able to upload files, edit /etc/vsftpd.conf:

```
write_enable=YES
```

  - ✓ Now restart vsftpd:

```
sudo systemctl restart vsftpd.service
```

  - ✓ Now when system users login to FTP they will start in their *home* directories where they can download, upload, create directories, etc.
  - ✓ Similarly, by default, anonymous users are not allowed to upload files to FTP server. To change this setting, you should uncomment the following line, and restart vsftpd:

```
anon_upload_enable=YES
```

  - ✓ To configure *FTPS*, edit /etc/vsftpd.conf

Que-5 Domain Name Service (DNS)

- ✓ Domain Name Service (DNS) is an Internet service that maps IP addresses and fully qualified domain names (FQDN) to one another. In this way, DNS alleviates the need to remember IP addresses.
- ✓ Computers that run DNS are called *name servers*. Ubuntu ships with *BIND* (Berkley Internet Naming Daemon), the most common program used for maintaining a name server on Linux.

Installation

At a terminal prompt, enter the following command to install *dns*:

```
sudo apt install bind9
```

A very useful package for testing and troubleshooting DNS issues is the dnsutils package. Very often these tools will be installed already, but to check and/or install *dnsutils* enter the following:

```
sudo apt install dnsutils
```

Configuration

There are many ways to configure BIND9. Some of the most common configurations are a caching nameserver, primary server, and secondary server.

- When configured as a caching nameserver BIND9 will find the answer to name queries and remember the answer when the domain is queried again.
- As a primary server, BIND9 reads the data for a zone from a file on its host and is authoritative for that zone.
- As a secondary server, BIND9 gets the zone data from another nameserver that is authoritative for the zone.

Atmiya University Rajkot

Overview

The DNS configuration files are stored in the /etc/bind directory. The primary configuration file is /etc/bind/named.conf, which in the layout provided by the package just includes these files.

- **/etc/bind/named.conf.options:** global DNS options
- **/etc/bind/named.conf.local:** for your zones
- **/etc/bind/named.conf.default-zones:** default zones such as localhost, its reverse, and the root hints

Caching Nameserver

The default configuration acts as a caching server. Simply uncomment and edit /etc/bind/named.conf.options to set the IP addresses of your ISP's DNS servers

Primary Server

In this section BIND9 will be configured as the Primary server for the domain example.com. Simply replace example.com with your FQDN (Fully Qualified Domain Name).

Secondary Server

Once a *Primary Server* has been configured a *Secondary Server* is highly recommended in order to maintain the availability of the domain should the Primary become unavailable.

First, on the Primary server, the zone transfer needs to be allowed. Add the allow-transfer option to the example Forward and Reverse zone definitions in /etc/bind/named.conf.local

Atmiya University Rajkot

Que-6 How to Configure Ubuntu's Built-In Firewall

- ✓ Ubuntu includes its own firewall, known as ufw – short for "uncomplicated firewall." Ufw is an easier-to-use frontend for the standard Linux iptables commands. You can even control ufw from a graphical interface.
- ✓ Ubuntu's firewall is designed as an easy way to perform basic firewall tasks without learning iptables. It doesn't offer all the power of the standard iptables commands, but it's less complex.

- **Terminal Usage**

✓ The firewall is disabled by default. To enable the firewall, run the following command from a terminal:

```
sudo ufw enable
```

✓ You don't necessarily have to enable the firewall first. You can add rules while the firewall is offline, and then enable it after you're done configuring it.

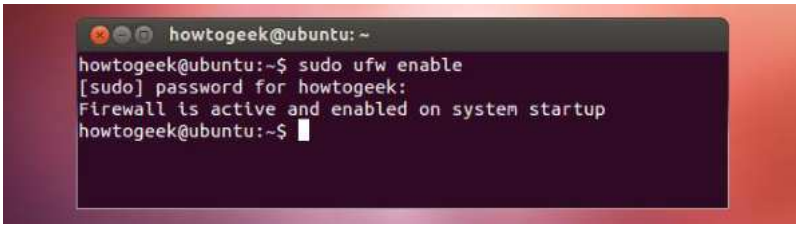

✓ To open a port (SSH in this example):

- `sudo ufw allow 22`

✓ Rules can also be added using a *numbered* format:

- `sudo ufw insert 1 allow 80`

✓ Similarly, to close an opened port:

Atmiya University Rajkot

- sudo ufw deny 22

✓ To remove a rule, use delete followed by the rule:

- sudo ufw delete deny 22

✓ It is also possible to allow access from specific hosts or networks to a port. The following example allows SSH access from host 192.168.0.2 to any IP address on this host:

- sudo ufw allow proto tcp from 192.168.0.2 to any port 22

Replace 192.168.0.2 with 192.168.0.0/24 to allow SSH access from the entire subnet.

✓ ufw can be disabled by:

- sudo ufw disable

✓ To see the firewall status, enter:

```
sudo ufw status
```

Logging is disabled by default, but you can also enable logging to print firewall messages to the system log:

sudo ufw logging on

- **GUFW Graphical Interface**

✓ UFW is a graphical interface for ufw. Ubuntu doesn't come with a graphical interface, but gufw is included in Ubuntu's software repositories. You can install it with the following command:

sudo apt-get install gufw

✓ GUFW appears in the Dash as an application named Firewall Configuration. Like ufw itself, GUFW provides a simple, easy-to-use interface. You can easily enable or disable the firewall, control the default policy for inbound or outbound traffic, and add rules.

✓ The rules editor can be used to add simple rules or more complicated ones.

Atmiya University Rajkot

- ✓ Remember, you can't do everything with ufw – for more complicated firewall tasks, you'll have to get your hands dirty with iptables.

Que-7 Web Servers:

- ✓ A Web server is a software responsible for accepting HTTP requests from clients, which are known as Web browsers, and serving them HTTP responses along with optional data contents, which usually are Web pages such as HTML documents and linked objects (images, etc.).

- HTTPD - Apache2 Web Server

  - ✓ Apache is the most commonly used Web server on Linux systems. Web servers are used to serve Web pages requested by client computers. Clients typically request and view Web pages using Web browser applications such as *Firefox*, *Opera*, *Chromium*, or *Internet Explorer*.
  - ✓ Users enter a Uniform Resource Locator (URL) to point to a Web server by means of its Fully Qualified Domain Name (FQDN) and a path to the required resource. For example, to view the home page of the Ubuntu Web site a user will enter only the FQDN:

```
www.ubuntu.com
```

- ✓ To view the community sub-page, a user will enter the FQDN followed by a path:

```
www.ubuntu.com/community
```

- ✓ The most common protocol used to transfer Web pages is the Hyper Text Transfer Protocol (HTTP). Protocols such as Hyper Text Transfer Protocol over Secure Sockets Layer (HTTPS), and File Transfer Protocol (FTP), a protocol for uploading and downloading files, are also supported.

Atmiya University Rajkot

- ✓ Apache Web Servers are often used in combination with the *MySQL* database engine, the HyperText Preprocessor (*PHP*) scripting language, and other popular scripting languages such as *Python* and *Perl*. This configuration is termed LAMP (Linux, Apache, MySQL and Perl/Python/PHP) and forms a powerful and robust platform for the development and deployment of Web-based applications.

Installation

The *Apache2* web server is available in Ubuntu Linux. To install Apache2:

- ✓ At a terminal prompt enter the following command:

```
sudo apt install apache2
```

Configuration

Apache2 is configured by placing *directives* in plain text configuration files. These *directives* are separated between the following files and directories:

1. ***apache2.conf****:* the main Apache2 configuration file. Contains settings that are *global* to Apache2.

2. ***httpd.conf****:* historically the main Apache2 configuration file, named after the *httpd* daemon. Now the file does not exist. In older versions of Ubuntu the file might be present, but empty, as all configuration options have been moved to the below referenced directories.

3. ***conf-available****:* this directory contains available configuration files. All files that were previously in /etc/apache2/conf.d should be moved to /etc/apache2/conf-available.
4. ***conf-enabled****:* holds *symlinks* to the files in /etc/apache2/conf-available. When a configuration file is symlinked, it will be enabled the next time *apache2* is restarted.

5. ***envvars:*** file where Apache2 *environment* variables are set.

6. ***mods-available****:* this directory contains configuration files to both load *modules* and configure them. Not all modules will have specific configuration files, however.

7. ***mods-enabled****:* holds *symlinks* to the files in /etc/apache2/mods-available. When a module configuration file is symlinked it will be enabled the next time *apache2* is restarted.

8. ***ports.conf:*** houses the directives that determine which TCP ports Apache2 is listening on.

9. ***sites-available****:* this directory has configuration files for Apache2 *Virtual Hosts*. Virtual Hosts allow Apache2 to be configured for multiple sites that have separate configurations
.
10. ***sites-enabled****:* like mods-enabled, sites-enabled contains symlinks to the /etc/apache2/sites-available directory. Similarly when a configuration file in sites-available is symlinked, the site configured by it will be active once Apache2 is restarted.

Atmiya University Rajkot

11. ***magic:*** instructions for determining MIME type based on the first few bytes of a file..

In addition, other configuration files may be added using the *Include* directive, and wildcards can be used to include many configuration files. Any directive may be placed in any of these configuration files. Changes to the main configuration files are only recognized by Apache2 when it is started or restarted.

Method-2 for LAMP and individual

- $ Sudo apt-get update (First time after installation)
- $ sudo apt-get install apache2
- $ sudo apt-get install phpmyadmin
- $ sudo apt-get install mysql-server
- Go to browser: http://localhost **or**
- http://127.0.1.1 (Home page)
- Store your demo.php page at /var/www

Now run http://localhost/demo.php

- Another way to Install apache web server, phpmyadmin and MySQL:
  - $ sudo apt-get install **tasksel** (if not installed)
  - $ sudo tasksel
  - Choose LAMP server and press ok
  - LAMP : L-Linux

    A- Apache

    M-MySQL

    P-phpmyadmin

  - Run services of Apache and then run php file
  - $ sudo service apache2 start

Atmiya University Rajkot

Que-8 Samba Server

- ✓ This section of the Ubuntu Server Guide introduces principles and tools used in configuring your Ubuntu Server for sharing network resources with Windows computers

- ✓ Successfully networking your Ubuntu system with Windows clients involves providing and integrating with services common to Windows environments. Such services assist the sharing of data and information about the computers and users involved in the network, and may be classified under three major categories of functionality:

1. **File and Printer Sharing Services**. Using the Server Message Block (SMB) protocol to facilitate the sharing of files, folders, volumes, and the sharing of printers throughout the network.
2. **Directory Services**. Sharing vital information about the computers and users of the network with such technologies as the Lightweight Directory Access Protocol (LDAP) and Microsoft Active Directory®.
3. **Authentication and Access**. Establishing the identity of a computer or user of the network and determining the information the computer or user is authorized to access using such principles and technologies as file permissions, group policies, and the Kerberos authentication service.

File Server

- ✓ One of the most common ways to network Ubuntu and Windows computers is to configure Samba as a File Server. This section covers setting up a *Samba* server to share files with Windows clients.

Installation

- ✓ The first step is to install the *samba* package. From a terminal prompt enter:

```
sudo apt install samba
```

Configuration

- ✓ The main Samba configuration file is located in /etc/samba/smb.conf. The default configuration file has a significant number of comments in order to document various configuration directives.

1. First, edit the following key/value pairs in the *[global]* section of /etc/samba/smb.conf:

```
workgroup = EXAMPLE
 ...
 security = user
```

The *security* parameter is farther down in the [global] section, and is commented by default. Also, change *EXAMPLE* to better match your environment.

2. Create a new section at the bottom of the file, or uncomment one of the examples, for the directory to be shared:

```
[share]
        comment = Ubuntu File Server Share
        path = /srv/samba/share
        browsable = yes[OK TO YES FOR PRINTER]
```


Atmiya University Rajkot

```
guest ok = yes[printer ok TO YES]
read only = no
create mask = 0755
```

1. *comment:* a short description of the share. Adjust to fit your needs.
2. *path:* the path to the directory to share.
   This example uses /srv/samba/sharename because, according to the *Filesystem Hierarchy Standard (FHS)*, /srv is where site-specific data should be served. Technically Samba shares can be placed anywhere on the filesystem as long as the permissions are correct, but adhering to standards is recommended.
3. *browsable:* enables Windows clients to browse the shared directory using *Windows Explorer*.
4. *guest ok:* allows clients to connect to the share without supplying a password.
5. *read only:* determines if the share is read only or if write privileges are granted. Write privileges are allowed only when the value is *no*, as is seen in this example. If the value is *yes*, then access to the share is read only.
6. *create mask:* determines the permissions new files will have when created.

3.Now that *Samba* is configured, the directory needs to be created and the permissions changed. From a terminal enter:

```
sudo mkdir -p /srv/samba/share
sudo chown nobody:nogroup /srv/samba/share/
```

- ✓ Finally, restart the *samba* services to enable the new configuration:

- ✓ After editing smb.conf restart Samba:

```
sudo systemctl restart smbd.service nmbd.service
```

- ✓ From a Windows client you should now be able to browse to the Ubuntu file server and see the shared directory. If your client doesn't show your share automatically, try to access your server by its IP address, e.g. \\192.168.1.1 OR 127.0.0.1 , in a Windows Explorer window. To check that everything is working try creating a directory from Windows.
- ✓ To create additional shares simply create new *[dir]* sections in /etc/samba/smb.conf, and restart *Samba*. Just make sure that the directory you want to share actually exists and the permissions are correct.

Atmiya University Rajkot

Que-9 Why use Wine:

- ✓ With the increasing popularity of Linux desktops, There is another requirement occurred that we should have an application which can be used to run windows applications. Windows has a long list of beautiful applications for users which is not available for Linux users. As we know that Linux does not support windows executable so WineHQ is a solution to run windows applications and Linux systems.

This article will help you to install Wine 1.7.38 Development Release on RHEL based systems.

For ubuntu you have to use "apt-get "

Installing Prerequisite

- ✓ Wine required many development packages, So we need to install required packages for Wine using yum package manager using following commands.

```
# yumgroupinstall 'Development Tools'

# yum install libX11-devel freetype-develzlib-devellibxcb-devel
```

Install Wine

- ✓ RPM packages for wine are not available for latest versions, So we need to download wine source code. Use below commands to download it.

```
# cd /usr/src

# wget  http://prdownloads.sourceforge.net/wine/wine-1.7.38.tar.bz2

# tar xjf wine-1.7.38.tar.bz2

# cd wine-1.7.38
```

- ✓ Configure wine using one of following command based on your system architecture.

```
For 32-Bit Systems:
```


Atmiya University Rajkot

```
# ./configure


For 64-Bit Systems:

# ./configure  --enable-win64
```

- ✓ Finally compile wine source with make command

```
# make

# make install
```

Check Wine Version

- ✓ Use following command to check version of wine installed on your system

```
On 32-Bit Systems:

# wine --version


On 64-Bit Systems:

# wine64 -version
```


Atmiya University Rajkot

How to Use Wine

- ✓ To use wine we need to login on GUI desktop. After that Download a windows executable (.exe) file like PuTTY on your system and open it with Wine as below screenshot or use following command.

```
# wine putty.exe
```

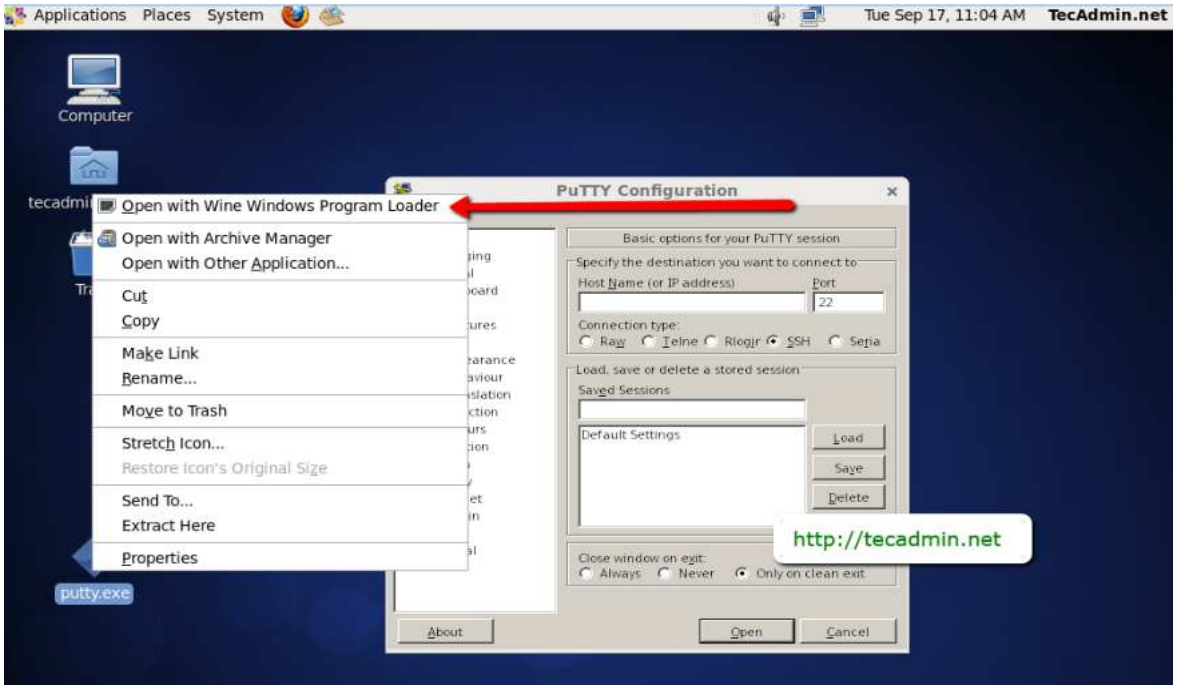

Virtualization Concepts

(1) What is virtualization? Explain in details.

- **Virtualization** is the process of creating a software-based, or virtual, representation of something, such as virtual applications, servers, storage and networks.
- It is the single most effective way to reduce IT expenses while boosting efficiency and agility for all size businesses.
- Operating system based Virtualization refers to an operating system feature in which the kernel enables the existence of various isolated user-space instances.
- The installation of virtualization software also refers to Operating system-based virtualization.
- It is installed over a pre-existing operating system and that operating system is called the host operating system.
- In this virtualization, a user installs the virtualization software in the operating system of his system like any other program and utilize this application to operate and generate various virtual machines.
- The virtualization software allows direct access to any of the created virtual machine to the user.
- As the host OS can provide hardware devices with the mandatory support, operating system virtualization may affect compatibility issues of hardware even when the hardware driver is not allocated to the virtualization software.
- Virtualization software is able to convert hardware IT resources which require unique software for operation into virtualized IT resources.
- As the host OS is a complete operating system in itself, many OS based services are available as organizational management and administration tools can be utilized for the virtualization host management.

Full Virtualization:

- Virtual machine simulates hardware to allow an unmodified guest OS to be run in isolation.
- There is two type of Full virtualizations in the enterprise market.
- On both full virtualization types, guest operating system's source information will not be modified.
    1. Software assisted full virtualization
    2. Hardware-assisted full virtualization
- It is also referred as true or pure virtualization.
- It completely relies on binary translation to trap and virtualize the execution of sensitive, non-virtualizable instructions sets.

Rajkot

- It emulates the hardware using the software instruction sets.
- Due to binary translation, it often criticized for performance issue.

Uses of OS Virtualization

- Used for virtual hosting environment.
- Used for securely allocation of finite hardware resources among a large number of distrusting users.
- System administrator uses it to integrate server hardware by moving services on separate hosts.
- To improvised security by separating several applications to several containers.
- These forms of virtualization don't require hardware to work efficiently.

Benefits of Virtualization:

- Reduced capital and operating costs.
- Increased IT productivity, efficiency, agility and responsiveness.
- Faster provisioning of applications and resources.
- Greater business continuity.
- Simplified data centre management.

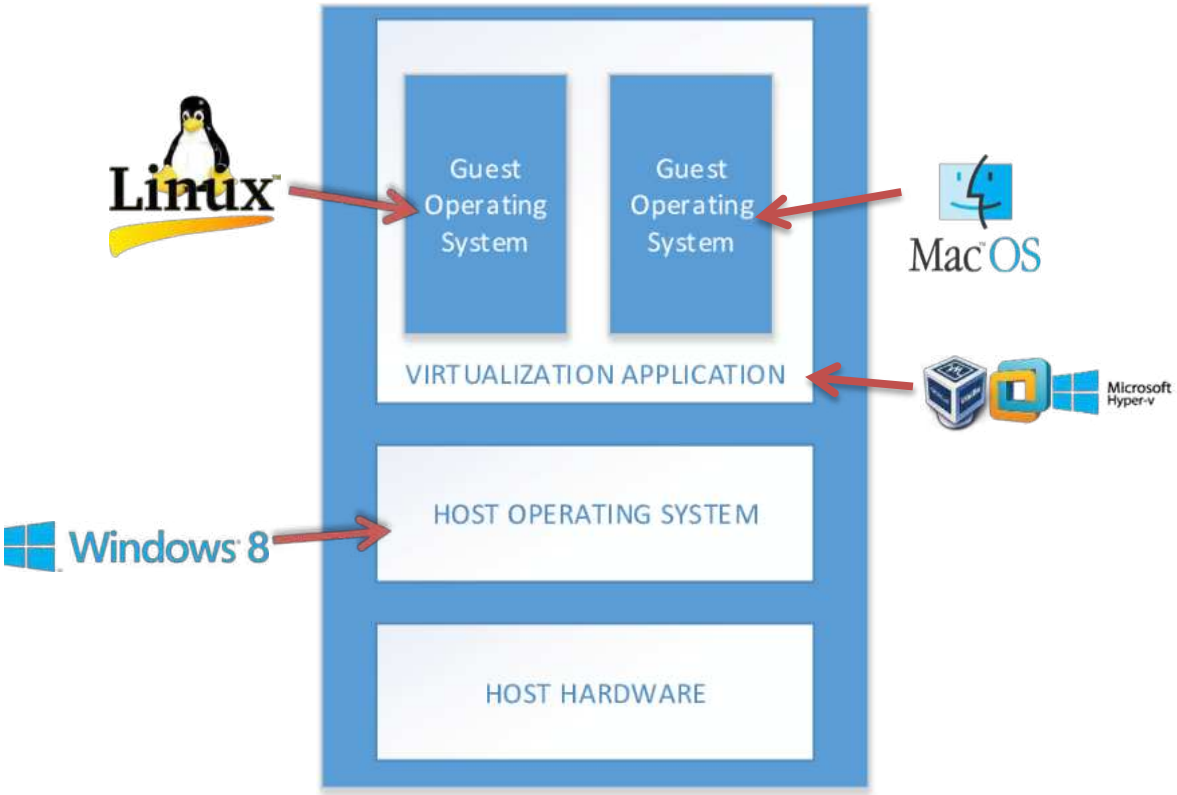

Figure 1-1. Virtualization

Atmiya University Rajkot

How OS Virtualization Works

- The steps for how these virtualization works are listed below:
- Connect to OS Virtualization Server
- Connect to virtual disk
- Then connect this virtual disk to the client
- OS is streamed to the client

(2) *Virtual Machine*

- Virtualization technology enables a single PC or server to simultaneously run multiple operating systems or multiple sessions of a single OS
- A machine with virtualization software can host numerous applications, including those that run on different operating systems, on a single platform
- The host operating system can support a number of virtual machines, each of which has the characteristics of a particular OS
- The solution that enables virtualization is a virtual machine monitor (VMM), or hypervisor
- Virtual machines are divided in two categories based on their use and correspondence to real machine.
- System virtual machines: It provides a complete system platform that executes complete operating system.
- Process virtual machines: It will run a single program.

Figure 1-2. Virtual Machine

Atmiya University Rajkot

Virtualization Concepts

- When we run different processes on an operating system, it creates an illusion that each process is running on a different processor having its own virtual memory, with the help of CPU scheduling and virtual-memory techniques.
- There are additional features of a process that cannot be provided by the hardware alone like system calls and a file system.
- The virtual machine approach does not provide these additional functionalities but it only provides an interface that is same as basic hardware.
- Each process is provided with a virtual copy of the underlying computer system.
- We can create a virtual machine for several reasons, all of which are fundamentally related to the ability to share the same basic hardware yet can also support different execution environments, i.e., different operating systems simultaneously.
- The main drawback with the virtual-machine approach involves disk systems. Let us suppose that the physical machine has only three disk drives but wants to support seven virtual machines.
- Obviously, it cannot allocate a disk drive to each virtual machine, because virtual-machine software itself will need substantial disk space to provide virtual memory and spooling. The solution is to provide virtual disks.
- Users are thus given their own virtual machines. After which they can run any of the operating systems or software packages that are available on the underlying machine.
- The virtual-machine software is concerned with multi-programming multiple virtual machines onto a physical machine, but it does not need to consider any user-support software.
- This arrangement can provide a useful way to divide the problem of designing a multi-user interactive system, into two smaller pieces.

Example:

- This is ideal for testing out other operating systems, like Windows 10 or alternative Linux operating systems.
- You can also use virtual machines to run software on operating systems it wasn't designed for.
- For example, you can run Windows programs on a Mac or run multiple copies of an app on a Mac with a virtual machine.

VM Advantages:

- Multiple OS environments can exist simultaneously on the same machine, separate from each other;

- Virtual machine can offer an instruction set architecture that differs from real computer.
- Easy maintenance, application provisioning, availability and convenient recovery.

VM Dis-advantages:

- When multiple virtual machines are simultaneously running on a host computer, each virtual machine may introduce an unstable performance, which depends on the workload on the system by other running virtual machines.
- Virtual machine is not that much efficient as a real one when accessing the hardware.

(3) Explain virtual machine application.

- Virtual Machine isolates the hardware of our computer such as CPU, hard drives, memory, NIC (Network Interface Card) etc, into many different execution environments as per our requirements, feel like a single computer.
- Examples: VirtualBox, VMWare Workstation & Microsoft Hyper-V.

VirtualBox VMWare Workstation Microsoft Hyper - V

VirtualBox

- VirtualBox is a great, open-source application that runs on Windows, macOS, and Linux.
- One of the best parts about VirtualBox is that there's no commercial version.
- This means you get all features for free, including advanced features like snapshots.
- This allows you to save a virtual machine's state and revert to that state in the future, which is great for testing.

VMWare Workstation

- VMware Workstation allows for the installation of multiple instances of different operating systems, including client and server operating systems.
- It helps the network or system administrators to check, test and verify the client server environment.
- Administrator can also switch between different virtual machines at same time.
- VMware Workstation has its limitations, including hardware support, operating system issues, and network protocols hurdles.

Microsoft Hyper - V

- Hyper-V is virtualization software that virtualizes software.
- It can not only virtualize operating systems but also entire hardware components, such as hard drives and network switches. Unlike VirtualBox.
- Hyper-V is not limited to the user's device. You can use it for server virtualization.
- Hyper-V is available in three versions.
  1. Hyper-V for Windows Servers
  2. Hyper-V Servers
  3. Hyper-V on Windows 10

(4) Use of Virtual Machine

- Take trial on newer versions of operating systems
- Virtualization from your own desktop
- Test with different operating systems
- Utilizing software that requests an outdated operating system
- Run software formatted for other operating systems
- Test software on many different platforms
- Compile different servers for business use
- Safety and Security

Atmiya University Rajkot

Atmiya University
Faculty of Science,
Department of Computer Science & I.T.

Subject Name: 21UFSDE309 Data Science Using Python

By: Dr. Hiren Kavathiya

Atmiya University Rajkot

What is Data Science?

- **Data Science** is the area of study which involves extracting insights from vast amounts of data using various scientific methods, algorithms, and processes. It helps you to discover hidden patterns from the raw data. The term Data Science has emerged because of the evolution of mathematical statistics, data analysis, and big data
- Data Science is an interdisciplinary field that allows you to extract knowledge from structured or unstructured data. Data science enables you to translate a business problem into a research project and then translate it back into a practical solution.

Why Data Science?

- Here are significant advantages of using Data Analytics Technology:
  - Data is the oil for today's world. With the right tools, technologies, algorithms, we can use data and convert it into a distinct business advantage
  - Data Science can help you to detect fraud using advanced machine learning algorithms
  - It helps you to prevent any significant monetary losses
  - Allows to build intelligence ability in machines

Why Data Science?

- You can perform sentiment analysis to gauge customer brand loyalty
- It enables you to take better and faster decisions
- It helps you to recommend the right product to the right customer to enhance your business

Why Data Science?

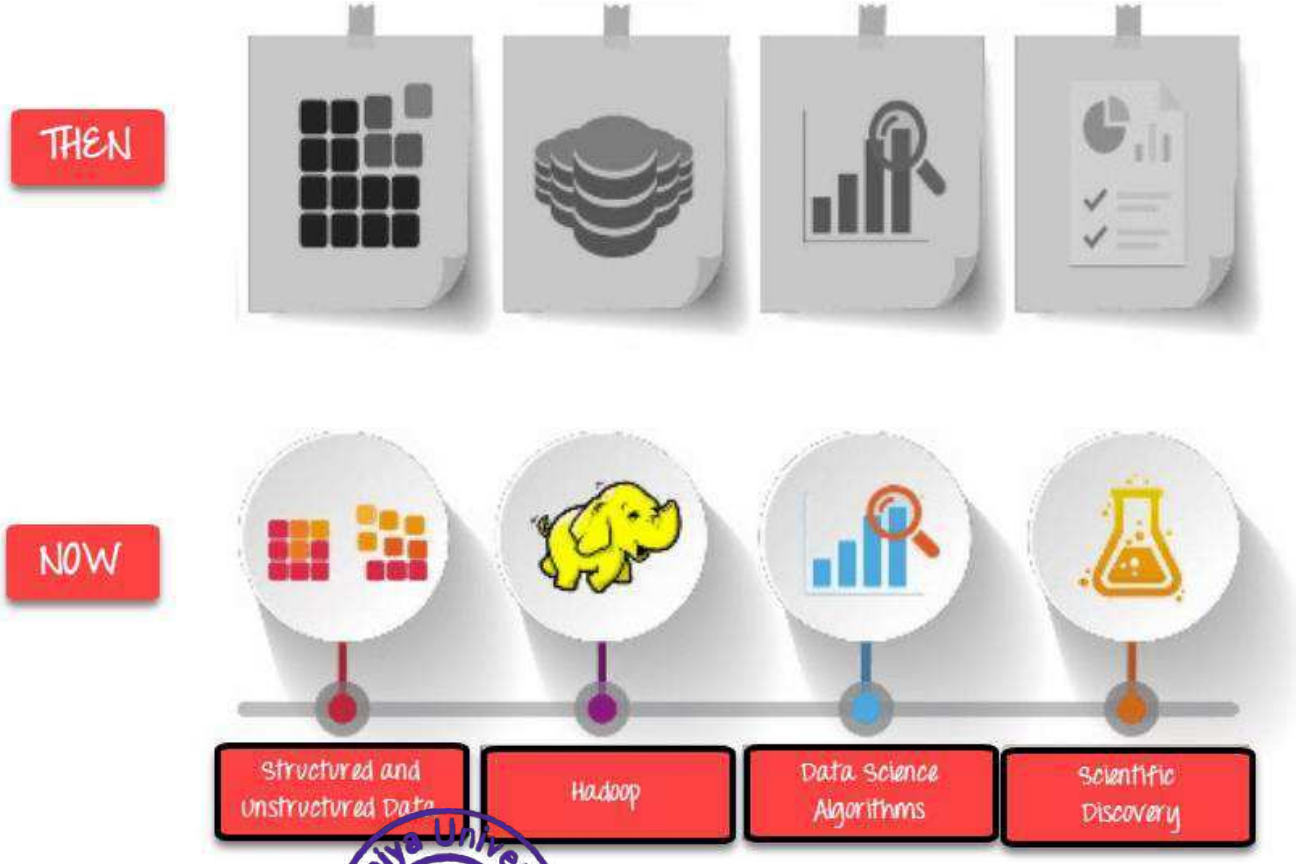

Atmiya University Rajkot

Data Science Components

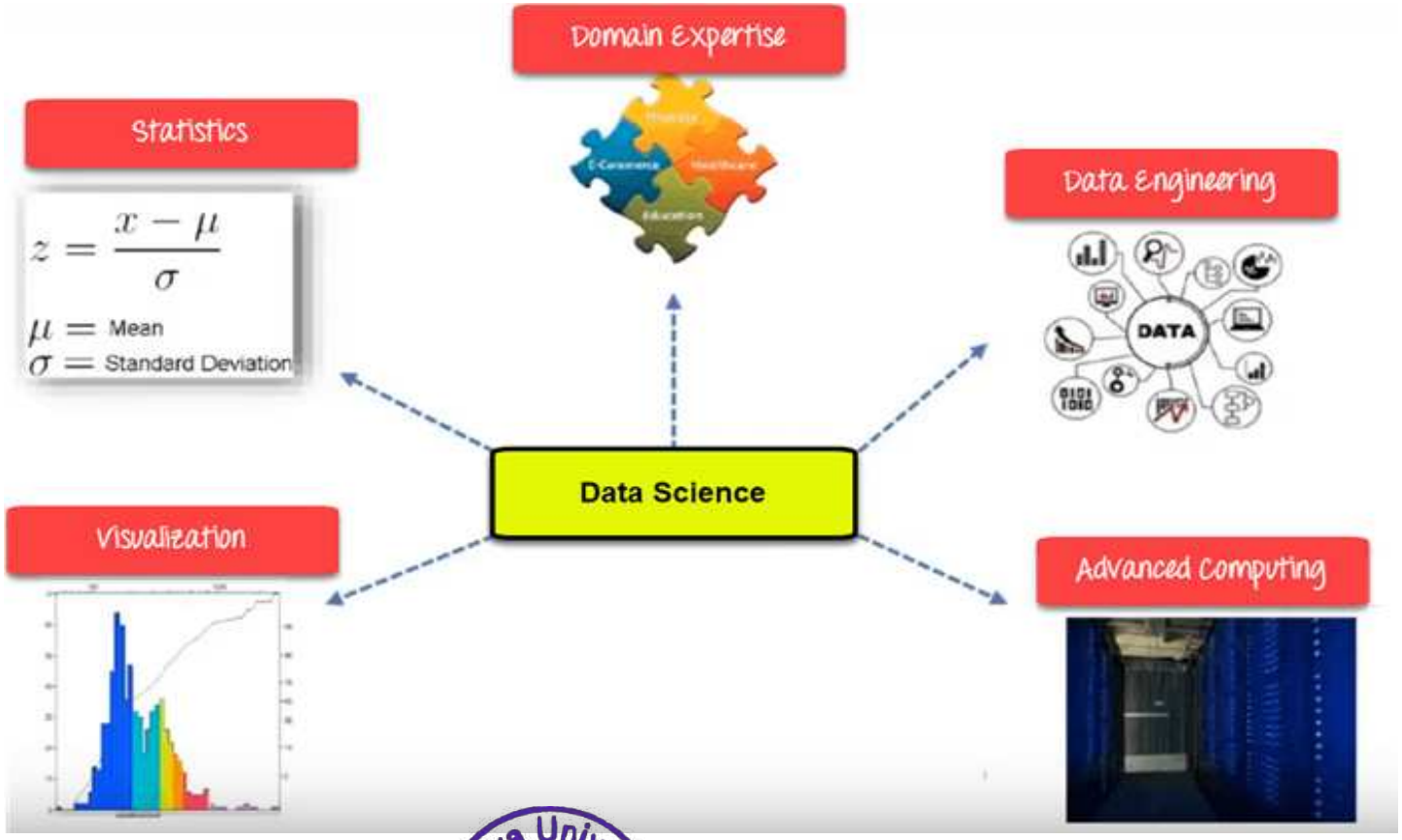

Data Science Components

- **Statistics:**
  - Statistics is the most critical unit of Data Science basics, and it is the method or science of collecting and analyzing numerical data in large quantities to get useful insights.
- **Visualization:**
  - Visualization technique helps you access huge amounts of data in easy to understand and digestible visuals.
- **Machine Learning:**
  - Machine Learning explores the building and study of algorithms that learn to make predictions about unforeseen/future data.

Data Science Components

- **Deep Learning:**
  - Deep Learning method is new machine learning research where the algorithm selects the analysis model to follow.

Data Science Process

- Now in this Data Science , we will learn the Data Science Pr

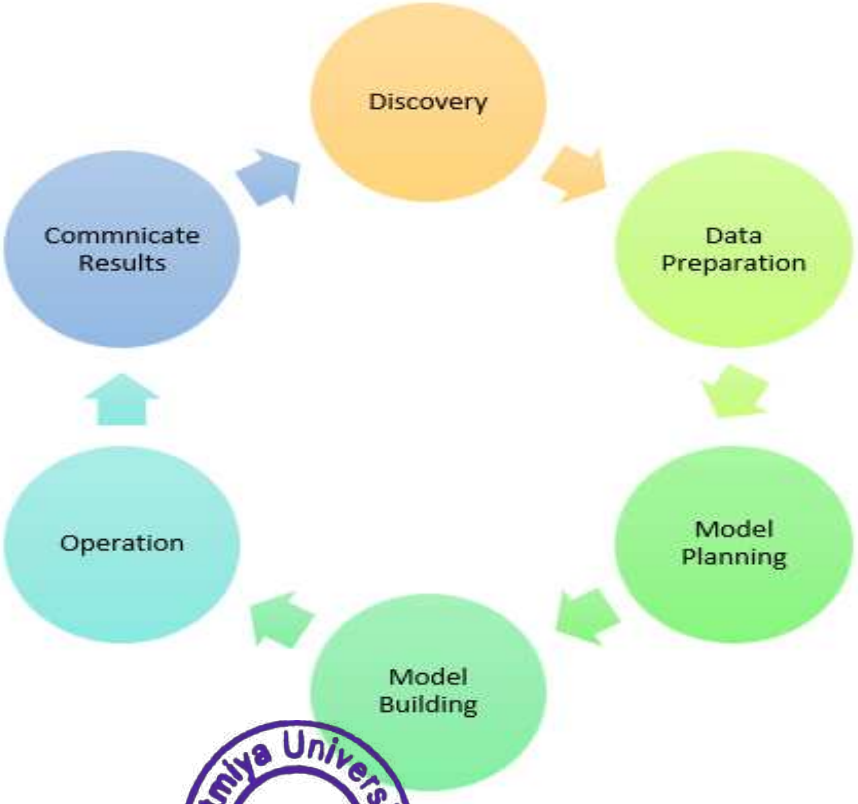

Atmiya University Rajkot

Data Science Process

- **1. Discovery:**
  - Discovery step involves acquiring data from all the identified internal & external sources, which helps you answer the business question.
  - The data can be:
    - Logs from webservers
    - Data gathered from social media
    - Census datasets
    - Data streamed from online sources using APIs

Data Science Process

- **2. Preparation:**
  - Data can have many inconsistencies like missing values, blank columns, an incorrect data format, which needs to be cleaned. You need to process, explore, and condition data before modelling. The cleaner your data, the better are your predictions.
- **3. Model Planning:**
  - In this stage, you need to determine the method and technique to draw the relation between input variables. Planning for a model is performed by using different statistical formulas and visualization tools. SQL analysis services, R, and SAS/access are some of the tools used for this purpose.

Data Science Process

- **4. Model Building:**
  - In this step, the actual model building process starts. Here, Data scientist distributes datasets for training and testing. Techniques like association, classification, and clustering are applied to the training data set. The model, once prepared, is tested against the "testing" dataset.
- **5. Operationalize:**
  - You deliver the final baselined model with reports, code, and technical documents in this stage. Model is deployed into a real-time production environment after thorough testing.

Atmiya University Rajkot

Data Science Process

- **6. Communicate Results**
  - In this stage, the key findings are communicated to all stakeholders. This helps you decide if the project results are a success or a failure based on the inputs from the model.

Data Science Jobs Roles

- Most prominent Data Scientist job titles are:
  - Data Scientist
  - Data Engineer
  - Data Analyst
  - Statistician
  - Data Architect
  - Data Admin
  - Business Analyst
  - Data/Analytics Manager

Atmiya University Rajkot

Data Science Jobs Roles

- **Data Scientist:**
  - **Role:** A Data Scientist is a professional who manages enormous amounts of data to come up with compelling business visions by using various tools, techniques, methodologies, algorithms, etc.
  - **Languages**: R, SAS, Python, SQL, Hive, Matlab, Pig, Spark
- **Data Engineer:**
  - **Role**: The role of a data engineer is of working with large amounts of data. He develops, constructs, tests, and maintains architectures like large scale processing systems and databases.
  - **Languages**: SQL, Hive, R, SAS, Matlab, Python, Java, Ruby, C + +, and Perl

Data Science Jobs Roles

- **Data Analyst:**
  - **Role**: A data analyst is responsible for mining vast amounts of data. They will look for relationships, patterns, trends in data. Later he or she will deliver compelling reporting and visualization for analyzing the data to take the most viable business decisions.
  - **Languages**: R, Python, HTML, JS, C, C+ + , SQL
- **Statistician:**
  - **Role**: The statistician collects, analyses, and understands qualitative and quantitative data using statistical theories and methods.
  - **Languages**: SQL, R, Matlab, Tableau, Python, Perl, Spark, and Hive

Data Science Jobs Roles

- **Data Administrator:**
  - **Role**: Data admin should ensure that the database is accessible to all relevant users. He also ensures that it is performing correctly and keeps it safe from hacking.
  - **Languages**: Ruby on Rails, SQL, Java, C#, and Python
- **Business Analyst:**
  - **Role**: This professional needs to improve business processes. He/she is an intermediary between the business executive team and the IT department.
  - **Languages**: SQL, Tableau, Power BI and, Python

Tools for Data Science

Data Analysis	Data Warehousing	Data Visualization	Machine Learning
R, **Spark, Python and SAS**	Hadoop, SQL, Hive	R, Tableau, Raw	Spark, Azure ML studio

Difference Between Data Science with BI (Business Intelligence)

Parameters	Business Intelligence	Data Science
Perception	Looking Backward	Looking Forward
Data Sources	Structured Data. Mostly SQL, but some time Data Warehouse	Structured and Unstructured data.Like logs, SQL, NoSQL, or text
Approach	Statistics & Visualization	Statistics, Machine Learning, and Graph
Emphasis	Past & Present	Analysis & Neuro-linguistic Programming
Tools	Pentaho, Microsoft Bl, QlikView,	R, TensorFlow

Atmiya University Rajkot

Applications of Data Science

- Some application of Data Science are:
- **Internet Search:**
  - Google search uses Data science technology to search for a specific result within a fraction of a second
- **Recommendation Systems:**
  - To create a recommendation system. For example, "suggested friends" on Facebook or suggested videos" on YouTube, everything is done with the help of Data Science.
- **Image & Speech Recognition:**
  - Speech recognizes systems like Siri, Google Assistant, and Alexa run on the Data science technique. Moreover, Facebook recognizes your friend when you upload a photo with them, with the help of Data Science.

Applications of Data Science

- **Gaming world:**
  - EA Sports, Sony, Nintendo are using Data science technology. This enhances your gaming experience. Games are now developed using Machine Learning techniques, and they can update themselves when you move to higher levels.
- **Online Price Comparison:**
  - PriceRunner, Junglee, Shopzilla work on the Data science mechanism. Here, data is fetched from the relevant websites using APIs.

Introduction of Python

- Python is a high-level, interpreted, interactive and object-oriented scripting language.
- Python is designed to be highly readable. It uses English keywords frequently where as other languages use punctuation, and it has fewer syntactical constructions than other languages.

Introduction of Python

- **Python is Interpreted**: Python is processed at runtime by the interpreter. You do not need to compile your program before executing it. This is similar to PERL and PHP.
- **Python is Interactive**: You can actually sit at a Python prompt and interact with the interpreter directly to write your programs.
- **Python is Object-Oriented**: Python supports Object-Oriented style or technique of programming that encapsulates code within objects.

Introduction of Python

- **Python is a Beginner's Language**: Python is a great language for the beginner-level programmers and supports the development of a wide range of applications from simple text processing to WWW browsers to games.
- Python is an example of a high-level language; other high-level languages you might have heard of are C++, PHP, Pascal, C#, and Java.
- Thus, programs written in a high-level language have to be translated into something more suitable before they can run.

Introduction of Python

- Almost all programs are written in high-level languages because of their advantages. It is much easier to program in a high-level language so programs take less time to write, they are shorter and easier to read, and they are more likely to be correct.
- Second, high-level languages are portable, meaning that they can run on different kinds of computers with few or no modifications.

Introduction of Python

- The engine that translates and runs Python is called the Python Interpreter. There are two ways to use it:
  - **immediate mode** and **script mode**. In immediate mode, you type Python expressions into the Python Interpreter window, and the interpreter immediately shows the result:

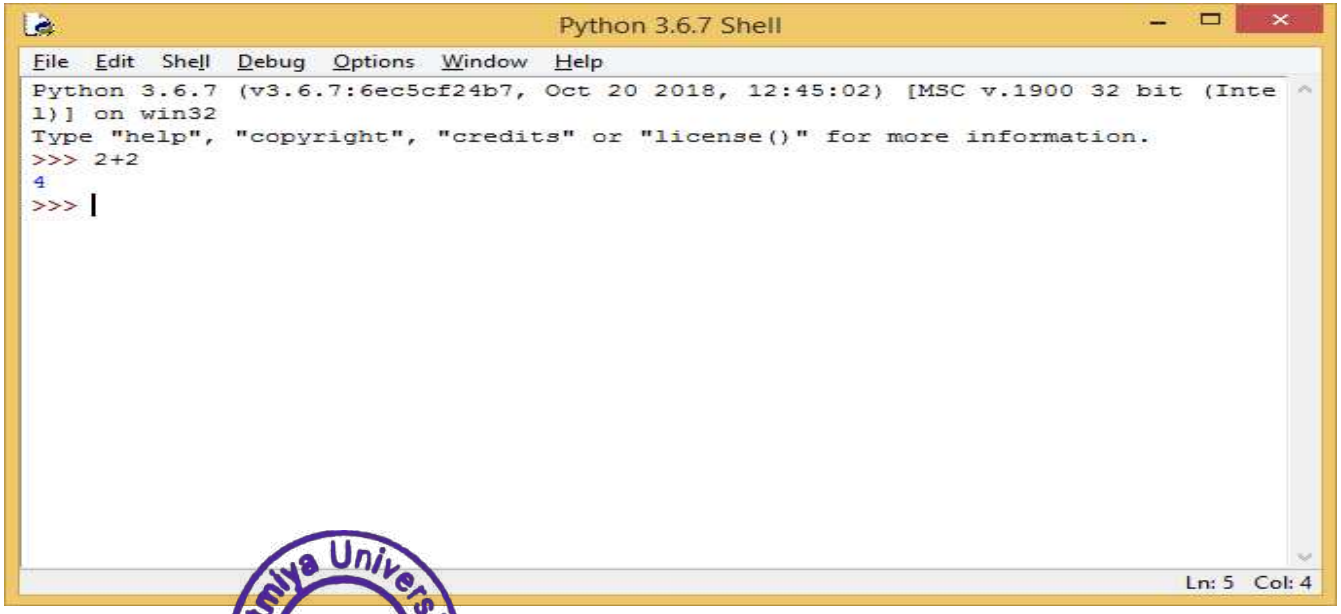

Introduction of Python

- The **>>> is called the Python prompt**. The interpreter uses the prompt to indicate that it is ready for instructions.

Python History

- Invented at the ***National Research Institute for Mathematics and Computer Science in the Netherlands***, early 90s by **Guido Van Rossum**
- Python was conceived in the late 1980s and its implementation was started in December 1989
- Python is derived from many other languages, including ABC, Modula-3, C, C++, Algol-68, SmallTalk, Unix shell, and other scripting languages.
- Open sourced from beginning
- Considered a scripting language, but is much more Scalable, object oriented and functional from the beginning
- Used by Google from the beginning

Python History

- Author is Guido Van Rossum
- Convinced in Late 1980
- Finally released in 1991
- Start implementation in December 1989 at CWI in Netherland.
- Successor of ABC Programming language.
- Name came from BBC's TV Show – 'Monty Python's Flying Circus'

Features of Python

- ***Easy-to-learn***: Python has few keywords, simple structure, and a clearly defined syntax.
- ***Easy-to-read:*** Python code is more clearly defined and visible to the eyes.
- ***Easy-to-maintain:*** Python's source code is fairly easy-to-maintain.
- ***A broad standard library:*** Python's bulk of the library is very portable and cross- platform compatible on UNIX, Windows, and Macintosh.
- ***Interactive Mode:*** Python has support for an interactive mode which allows interactive testing and debugging of snippets of code.
- ***Portable:*** Python can run on a wide variety of hardware platforms and has the same interface on all platforms.

Features of Python

- ***Extendable:*** You can add low-level modules to the Python interpreter. These modules enable programmers to add to or customize their tools to be more efficient.
- ***Databases:*** Python provides interfaces to all major commercial databases.
- ***GUI Programming:*** Python supports GUI applications that can be created and ported to many system calls, libraries, and windows systems, such as Windows MFC, Macintosh, and the X Window system of UNIX.
- ***Scalable***: Python provides a better structure and support for large programs than shell scripting.

Installing Python

- Python is pre-installed on most Unix systems, including Linux and MAC OS X
- But for Windows Operating Systems, user can download from the **https://www.python.org/downloads/**
- Form the above link download latest version of python IDE and install.

Atmiya University
Faculty of Science,
Department of Computer Science & I.T.

Subject Name: 21UFSDE309 Data Science Using Python

By: Dr. Hiren Kavathiya

Python Data Types

- **Built-in Data Types**
- In programming, data type is an important concept.
- Variables can store data of different types, and different types can do different things.

Python Data Types

- **Built in Datatypes**
  - None Type
  - Numeric Types (int, float)
  - Bool Type
  - Sequences (list, tuple)
  - Sets (sets, frozenset)
  - Mappings (dict)

Python Data Types

- **Python Numbers**
- int
- float
- **Int**
- Int, or integer, is a whole number, positive or negative, without decimals, of unlimited length.

Python Data Types

- **Example**
- Integers:
- x = 1
  y = 3565622255488771 1
  z = -3255522

```
print(type(x))
print(type(y))
print(type(z))
```

→ int

Python Data Types

- **Float**
- Float, or "floating point number" is a number, positive or negative, containing one or more decimals.
- **Example**
- Floats:
- x = 1.10
  y = 1.0
  z = -35.59

```
print(type(x))
print(type(y))
print(type(z))
```

Float

Python Data Types

- **Float**
- Float, or "floating point number" is a number, positive or negative, containing one or more decimals.
- **Example**
- Floats:
- x = 1.10
  y = 1.0
  z = -35.59

```
print(type(x))
print(type(y))
print(type(z))
```

Float

Python Data Types

- **Bool Type**
- Booleans represent one of two values: True or False.
- The bool() function allows you to evaluate any value, and give you True or False in return.
- **Example**
- Evaluate a string and a number:
- print(bool("Hello"))
  print(bool(15))

True

Python Data Types

- here are four collection data types in the Python programming language:
  - **List** is a collection which is ordered and changeable. Allows duplicate members.
  - **Tuple** is a collection which is ordered and unchangeable. Allows duplicate members.
  - **Set** is a collection which is unordered, unchangeable*, and unindexed. No duplicate members.
  - **Dictionary** is a collection which is ordered** and changeable. No duplicate members.

Python Data Types

- **Sequences (list, tuple)**
  - **Python Lists**
- Lists are used to store multiple items in a single variable.
- Lists are one of 4 built-in data types in Python used to store collections of data
- Lists are created using square brackets:
  - thislist = ["apple", "banana", "cherry"]
    print(thislist)

['apple', 'banana', 'cherry']

Python Data Types

- **List Items**
- List items are ordered, changeable, and allow duplicate values.
- List items are indexed, the first item has index [0], the second item has index [1] etc.

Python Data Types

- **List Length**
  - To determine how many items a list has, use the len() function:
- **Example**
- Print the number of items in the list:
  - thislist = ["apple", "banana", "cherry"]
    print(len(thislist))
  - **Ans is :- 3**

Python Data Types

- **Tuple**
- Tuples are used to store multiple items in a single variable.
- Tuple is one of 4 built-in data types in Python used to store collections of data, the other 3 are List, Set, and Dictionary, all with different qualities and usage.
- A tuple is a collection which is ordered and **unchangeable**.
- Tuples are written with round brackets.

Python Data Types

- **Example**
- Create a Tuple:
  - thistuple = ("apple", "banana", "cherry")
    print(thistuple)

Output :- ('apple', 'banana', 'cherry')

Python Data Types

- **Example**
- Create a Tuple:
  - thistuple = ("apple", "banana", "cherry")
    print(thistuple)

Output :- ('apple', 'banana', 'cherry')

Python Data Types

- **Tuple Items**
- Tuple items are ordered, unchangeable, and allow duplicate values.
- Tuple items are indexed, the first item has index [0], the second item has index [1] etc.
- **Ordered**
- When we say that tuples are ordered, it means that the items have a defined order, and that order will not change.
- **Unchangeable**
- Tuples are unchangeable, meaning that we cannot change, add or remove items after the tuple has been created.

Python Data Types

- **Allow Duplicates**
- Since tuples are indexed, they can have items with the same value:
- **Example**
- Tuples allow duplicate values:
  - thistuple = ("apple", "banana", "cherry", "apple", "cherry")
    print(thistuple)
- **Output :-** ('apple', 'banana', 'cherry', 'apple', 'cherry')

Python Data Types

- **Access Tuple Items**
- You can access tuple items by referring to the index number, inside square brackets:
- **Example**
  - Print the second item in the tuple:
  - thistuple = ("apple", "banana", "cherry")
    print(thistuple[1])
- **Output :-** banana

Python Data Types

- **Negative Indexing**
- Negative indexing means start from the end.
- -1 refers to the last item, -2 refers to the second last item etc.
- **Example**
  - Print the last item of the tuple:
  - thistuple = ("apple", "banana", "cherry")
    print(thistuple[-1])
  - **OUTPUT :- Cherry**

Python Data Types

- **Range of Indexes**
- You can specify a range of indexes by specifying where to start and where to end the range.
- When specifying a range, the return value will be a new tuple with the specified items.
- **Example**
  - Return the third, fourth, and fifth item:
  - thistuple = ("apple", "banana", "cherry", "orange", "kiwi", "melon", "mango")
    print(thistuple[2:5])
  - **Output :-** ('cherry', 'orange', 'kiwi')

Python Data Types

- This example returns the items from the beginning to, but NOT included, "kiwi":
  - thistuple = ("apple", "banana", "cherry", "orange", "kiwi", "melon", "mango")
    print(thistuple[:4])

OUTPUT :- ('apple', 'banana', 'cherry', 'orange')

Python Data Types

- This example returns the items from "cherry" and to the end:
  - thistuple = ("apple", "banana", "cherry", "orange", "kiwi", "melon", "mango")
    print(thistuple[2:])
  - **OUTPUT :-** ('cherry', 'orange', 'kiwi', 'melon', 'mango')

Python Data Types

- **Range of Negative Indexes**
- Specify negative indexes if you want to start the search from the end of the tuple:
- **Example**
- This example returns the items from index -4 (included) to index -1 (excluded)
- thistuple = ("apple", "banana", "cherry", "orange", "kiwi", "melon", "mango")
  print(thistuple[-4:-1])
- **OUTPUT :-** ('orange', 'kiwi', 'melon')

Python Data Types

- **Check if Item Exists**
- To determine if a specified item is present in a tuple use the **in** keyword:
  - thistuple = ("apple", "banana", "cherry")
    if "apple" in thistuple:
    print("Yes, 'apple' is in the fruits tuple")
  - **OUTPUT:-**
    - **Yes, 'apple' is in the fruits tuple**

Python Data Types

- **Change Tuple Values**
- Once a tuple is created, you cannot change its values. Tuples are **unchangeable**, or **immutable** as it also is called.
- But there is a workaround. You can convert the tuple into a list, change the list, and convert the list back into a tuple.

Python Data Types

- **Example**
- Convert the tuple into a list to be able to change it:
- x = ("apple", "banana", "cherry")

```
y = list(x)
y[1] = "kiwi"
x = tuple(y)
print(x)
```

- **Output : - ("apple", "kiwi", "cherry")**

Python Data Types

- **Add Items**
- Since tuples are immutable, they do not have a build-in append() method, but there are other ways to add items to a tuple.
- **Example**
- Convert the tuple into a list, add "orange", and convert it back into a tuple:
  - thistuple = ("apple", "banana", "cherry")
    y = list(thistuple)
    y.append("orange")
    thistuple = tuple(y)
  - **OUTPUT:- ('apple', 'banana', 'cherry', 'orange')**

Python Data Types

- **Add tuple to a tuple**. You are allowed to add tuples to tuples, so if you want to add one item, (or many), create a new tuple with the item(s), and add it to the existing tuple:
- **Example**
- Create a new tuple with the value "orange", and add that tuple:
- thistuple = ("apple", "banana", "cherry")
  y = ("orange",)
  thistuple += y
  print(thistuple)
- **OUTPUT:- ('apple', 'banana', 'cherry', 'orange')**

Python Data Types

Remove Items

Tuples are **unchangeable**, so you cannot remove items from it, but you can use the same workaround as we used for changing and adding tuple items:

- **Example**
- Convert the tuple into a list, remove "apple", and convert it back into a tuple:
- thistuple = ("apple", "banana", "cherry")
  y = list(thistuple)
  y.remove("apple")
  thistuple = tuple(y) **Output :- ('banana', 'cherry')**

Atmiya University Rajkot

Python Data Types

Example

- The del keyword can delete the tuple completely:
- thistuple = ("apple", "banana", "cherry")
  del thistuple
  print(thistuple) #this will raise an error because the tuple no longer exists

Python Data Types

- **Unpacking a Tuple**
- When we create a tuple, we normally assign values to it. This is called "packing" a tuple:
- **Example**
- Packing a tuple:
- fruits = ("apple", "banana", "cherry")

Python Data Types

But, in Python, we are also allowed to extract the values back into variables. This is called "unpacking":

- **Example**
- Unpacking a tuple:

```
fruits = ("apple", "banana", "cherry")
(green, yellow, red) = fruits
print(green)
print(yellow)
print(red)
```

Python Data Types

- **Using Asterisk***
- If the number of variables is less than the number of values, you can add an * to the variable name and the values will be assigned to the variable as a list:
- **Example**
- Assign the rest of the values as a list called "red":
- fruits = ("apple", "banana", "cherry", "strawberry", "raspberry")
  (green, yellow, *red) = fruits
  print(green)
  print(yellow)
  print(red)
- **Output :-???**

Python Data Types

- If the asterisk is added to another variable name than the last, Python will assign values to the variable until the number of values left matches the number of variables left.
- **Example**
- Add a list of values the "tropic" variable:
  - fruits = ("apple", "mango", "papaya", "pineapple", "cherry")

```
(green, *tropic, red) = fruits

print(green)
print(tropic)
print(red)
```

- **Output :-???**

Python Data Types

- If the asterisk is added to another variable name than the last, Python will assign values to the variable until the number of values left matches the number of variables left.
- **Example**
- Add a list of values the "tropic" variable:
  - fruits = ("apple", "mango", "papaya", "pineapple", "cherry")

```
(green, *tropic, red) = fruits

print(green)
print(tropic)
print(red)
```

- **Output :-???**

Python Data Types

- **Python Sets**
- Sets are used to store multiple items in a single variable.
- A set is a collection which is *unordered*, *unchangeable**, and *unindexed*.
- Sets are written with curly brackets.
- **Example**
- Create a Set:
- a = {"apple", "banana", "cherry"}
  print(a)

Python Data Types

- **Output :-** {'banana', 'apple', 'cherry'}

- # Note: the set list is unordered, meaning: the items will appear in a random order.

- # Refresh this page to see the change in the result.

Python Data Types

- **Set Items**
- Set items are unordered, unchangeable, and do not allow duplicate values.
- **Unordered**
- Unordered means that the items in a set do not have a defined order.
- Set items can appear in a different order every time you use them, and cannot be referred to by index or key.
- **Unchangeable**
- Set items are unchangeable, meaning that we cannot change the items after the set has been created.

Python Data Types

- **Duplicates Not Allowed**
- Sets cannot have two items with the same value.
- **Example**
- Duplicate values will be ignored:
  - a = {"apple", "banana", "cherry", "apple"}
    print(a)
  - **OUTPUT :-**

    {'banana', 'cherry', 'apple'}

Python Data Types

- **Get the Length of a Set**
- To determine how many items a set has, use the len() function.
- **Example**
- Get the number of items in a set:
- a = {"apple", "banana", "cherry"}
  print(len(a))
- Output : - {'apple', 'cherry', 'banana'}

Python Data Types

- **The set() Constructor**
- It is also possible to use the set() constructor to make a set.
- **Example**
- Using the set() constructor to make a set:
- a = set(("apple", "banana", "cherry")) # note the double round-brackets
  print(a)

Python Data Types

- **Add Set Items**
- To add one item to a set use the add() method.
- **Example**
- Add an item to a set, using the add() method:
- a = {"apple", "banana", "cherry"}
  a.add("orange")
  print(a)
- OUTPUT :- {'apple', 'cherry', 'orange', 'banana'}

Python Data Types

- **Add Sets**
- To add items from another set into the current set, use the update() method.
- **Example**
- Add elements from tropical into a:
- a = {"apple", "banana", "cherry"}
  tropical = {"pineapple", "mango", "papaya"}
  a.update(tropical)
  print(a)
- Output : - {'apple', 'mango', 'cherry', 'pineapple', 'banana', 'papaya'}

Python Data Types

- **Remove Item**
- To remove an item in a set, use the remove(), or the discard() method.
- **Example**
- Remove "banana" by using the remove() method:
- a = {"apple", "banana", "cherry"}
  a.remove("banana")
  print(a)
- Output : - {'apple', 'cherry'}

Python Data Types

- **Example**
- Remove "banana" by using the discard() method:
- a = {"apple", "banana", "cherry"}
  a.discard("banana")
  print(a)

- Output : - {'cherry', 'apple'}

Python Data Types

- You can also use the pop() method to remove an item, but this method will remove the *last* item. Remember that sets are unordered, so you will not know what item that gets removed.
- The return value of the pop() method is the removed item.
- **Example**
- Remove the last item by using the pop() method:
  - a = {"apple", "banana", "cherry"}
    x = a.pop()
    print(x)
    print(a)

Python Data Types

- **Example**
- The clear() method empties the set:
- a = {"apple", "banana", "cherry"}
  a.clear()
  print(a)
- **Example**
- The del keyword will delete the set completely:
- a = {"apple", "banana", "cherry"}
  del thisset
  print(a)

Python Data Types

- **Python frozenset() Function**
- The frozenset() function returns an unchangeable frozenset object (which is like a set object, only unchangeable).
- **Example**
- Try to change the value of a frozenset item.
- This will cause an error:
- mylist = ['apple', 'banana', 'cherry']
  x = frozenset(mylist)
  # x[1] = "strawberry"
- print(x)

Python Data Types

- **Python Dictionaries**
- Dictionaries are used to store data values in key:value pairs.
- A dictionary is a collection which is ordered*, changeable and do not allow duplicates. (As of Python version 3.7, dictionaries are *ordered*. In Python 3.6 and earlier, dictionaries are *unordered*.)
- Dictionaries are written with curly brackets, and have keys and values:

Python Data Types

- **Python Dictionaries**
- thisdict = {
  "brand": “Maruti -Suzuki",
  "model": “Brezza",
  "year": 2021
  }
  print(thisdict)

Python Data Types

- **Dictionary Items**
- Dictionary items are ordered, changeable, and does not allow duplicates.
- Dictionary items are presented in key:value pairs, and can be referred to by using the key name.
- **Example**
- Print the "brand" value of the dictionary:
- thisdict = {
  "brand": “Maruti -Suzuki",
  "model": “Brezza",
  "year": 2021
  }
  print(thisdict)

Python Data Types

- **Duplicates Not Allowed**
- Dictionaries cannot have two items with the same key:
- **Example**
- Duplicate values will overwrite existing values:
- thisdict = {

```
    "brand": “Maruti -Suzuki",
   "model": “Brezza",
   "year": 2021,
   "year": 2020
 }
 print(thisdict)
```

Python Data Types

- **Duplicates Not Allowed**
- Dictionaries cannot have two items with the same key:
- **Example**
- Duplicate values will overwrite existing values:
- thisdict = {

```
  "brand": “Maruti -Suzuki",
  "model": “Brezza",
  "year": 2021,
  "year": 2020
}
print(thisdict)
```

Atmiya University
Faculty of Science,
Department of Computer Science & I.T.

Subject Name: 21UFSDE309 Data Science Using Python

By: Dr. Hiren Kavathiya

Atmiya University Rajkot

Python Conditions

- **If statements**
- **Python if Statement** is used for decision-making operations. It contains a body of code which runs only when the condition given in the if statement is true.
- **Python if Statement Syntax:**
  - if expression :
    - Statement

Python Conditions

- **Example**
- a = 33

```
b = 200
if b > a:
  print("b is greater than a")
```

Python Conditions

- **Indentation**
- Python relies on indentation (whitespace at the beginning of a line) to define scope in the code. Other programming languages often use curly-brackets for this purpose.
- **Example**
- If statement, without indentation (will raise an error):
- a = 33
  b = 200
  if b > a:
  print("b is greater than a") # you will get an error

Python Conditions

- **Else**
- The else keyword catches anything which isn't caught by the preceding conditions.
- a = 200

```
b = 33
if b > a:
  print("b is greater than a")
else:
  print("a is greater than b")
```

Python Conditions

- **Elif**
- The elif keyword is pythons way of saying "if the previous conditions were not true, then try this condition".
-
```
a = 200
b = 33
if b > a:
  print("b is greater than a")
elif a == b:
  print("a and b are equal")
else:
  print("a is greater than b")
```

Python Conditions

- **Elif**
- The elif keyword is pythons way of saying "if the previous conditions were not true, then try this condition".
-
```
a = 200
b = 33
if b > a:
  print("b is greater than a")
elif a == b:
  print("a and b are equal")
else:
  print("a is greater than b")
```

Python Loops

- Python has two primitive loop commands:
  - while loops
  - for loops
- **The while Loop**
- With the while loop we can execute a set of statements as long as a condition is true.
- **Example**
- Print i as long as i is less than 6:
-
```
i = 1
while i < 6:
  print(i)
  i += 1
```

The break Statement

- With the break statement we can stop the loop even if the while condition is true:
- **Example**
- Exit the loop when i is 3:
- i = 1

```
while i < 6:
  print(i)
  if i == 3:
    break
  i += 1
```

The continue Statement

- With the continue statement we can stop the current iteration, and continue with the next:
- **Example**
- Continue to the next iteration if i is 3:
- i = 0

```
while i < 6:
  i += 1
  if i == 3:
    continue
  print(i)
```

- # Note that number 3 is missing in the result

The else Statement

- With the else statement we can run a block of code once when the condition no longer is true:
- **Example**
- Print a message once the condition is false:
- i = 1

```
while i < 6:
  print(i)
  i += 1
else:
  print("i is no longer less than 6")
```

Python For Loops

A for loop is used for iterating over a sequence (that is eit her a list, a tuple, a dictionary, a set, or a string).

- **Example**
- Print each fruit in a fruit list:
- fruits = ["apple", "banana", "cherry"]

```
for x in fruits:
  print(x)
```

Python For Loops

- **Looping Through a String**
- Even strings are iterable objects, they contain a sequence of characters:
- **Example**
- Loop through the letters in the word "banana":
- for x in "banana":

```
for x in "banana":
    print(x)
```

Python For Loops

- **The break Statement**
- With the break statement we can stop the loop before it has looped through all the items:
- **Example**
- Exit the loop when x is "banana":
- fruits = ["apple", "banana", "cherry"]

```
for x in fruits:
  print(x)
  if x == "banana":
    break
```

Python For Loops

- **The continue Statement**
- With the continue statement we can stop the current iteration of the loop, and continue with the next:
- **Example**
- Do not print banana:
- fruits = ["apple", "banana", "cherry"]

```
for x in fruits:
  if x == "banana":
    continue
  print(x)
```

Python For Loops

- **The range() Function**
- To loop through a set of code a specified number of times, we can use the range() function,
- The range() function returns a sequence of numbers, starting from 0 by default, and increments by 1 (by default), and ends at a specified number.
- **Example**
- Using the range() function:
- for x in range(6):
  print(x)

Python For Loops

- The range() function defaults to 0 as a starting value, however it is possible to specify the starting value by adding a parameter: range(2, 6), which means values from 2 to 6 (but not including 6):
- **Example**
- Using the start parameter:
- for x in range(2, 6):

```
print(x)
```

Python For Loops

- The range() function defaults to increment the sequence by 1, however it is possible to specify the increment value by adding a third parameter: range(2, 30, **3**):
- **Example**
- Increment the sequence with 3 (default is 1):
- for x in range(2, 30, 3):

```
print(x)
```

Python For Loops

- **Else in For Loop**
- The else keyword in a for loop specifies a block of code to be executed when the loop is finished:
- **Example**
- Print all numbers from 0 to 5, and print a message when the loop has ended:
- for x in range(6):

```
  print(x)
else:
  print("Finally finished!")
```

Python For Loops

- **Nested Loops**
- A nested loop is a loop inside a loop.
- The "inner loop" will be executed one time for each iteration of the "outer loop":
- **Example**
- Print each adjective for every fruit:
- adj = ["red", "big", "tasty"]
  fruits = ["apple", "banana", "cherry"]

```
for x in adj:
  for y in fruits:
    print(x, y)
```

Python assert Keyword

- **Definition and Usage**
- The assert keyword is used when debugging code.
- The assert keyword lets you test if a condition in your code returns True, if not, the program will raise an AssertionError.
- You can write a message to be written if the code returns False, check the example below.

Python assert Keyword

- **Example**
- Test if a condition returns True:

```
x = "hello"
#if condition returns True, then nothing happens:
assert x == "hello"
#if condition returns False, Assertion Error is raised:
assert x == "goodbye"
```

Python assert Keyword

- **Example**
- Write a message if the condition is False:
- x = "hello"

```
#if condition returns False, AssertionError is raised:
assert x == "goodbye", "x should be 'hello'"
```

Python pass Statement

- **Definition and Usage**
- The pass statement is used as a placeholder for future code.
- When the pass statement is executed, nothing happens, but you avoid getting an error when empty code is not allowed.
- Empty code is not allowed in loops, function definitions, class definitions, or in if statements.

Python pass Statement

- **Example**
- Create a placeholder for future code:
- for x in [0, 1, 2]:

  pass

Python Arrays

- Arrays are used to store multiple values in one single variable:
- **Example**
- Create an array containing car names:

```
cars = ["Ford", "Volvo", "BMW"]
```

Python Arrays

- **What is an Array?**
- An array is a special variable, which can hold more than one value at a time.
- If you have a list of items (a list of car names, for example), storing the cars in single variables could look like this:
- car1 = "Ford"
  car2 = "Volvo"
  car3 = "BMW"
- However, what if you want to loop through the cars and find a specific one? And what if you had not 3 cars, but 300?
- The solution is an array!
- An array can hold many values under a single name, and you can access the values by referring to an index number.

Python Arrays

- **Access the Elements of an Array**
- You refer to an array element by referring to the *index number*.
- **Example**
- Get the value of the first array item:

```
x = cars[0]
```

Python Arrays

- **Example**
- Modify the value of the first array item:
  - cars[0] = "Toyota"
- **The Length of an Array**
- Use the len() method to return the length of an array (the number of elements in an array).
- **Example**
- Return the number of elements in the cars array:
- x = len(cars)

Python Arrays

- **Looping Array Elements**
- You can use the for in loop to loop through all the elements of an array.
- **Example**
- Print each item in the cars array:
- for x in cars:

```
print(x)
```

Python Arrays

- **Adding Array Elements**
- You can use the append() method to add an element to an array.
- **Example**
- Add one more element to the cars array:
- cars.append("Honda")

Python Arrays

- **Removing Array Elements**
- You can use the pop() method to remove an element from the array.
- **Example**
- Delete the second element of the cars array:
- cars.pop(1)

Python Arrays

- You can also use the remove() method to remove an element from the array.
- **Example**
- Delete the element that has the value "Volvo":
- cars.remove("Volvo")

Python Arrays

- **Array Methods**
- Python has a set of built-in methods that you can use on lists/arrays.
- **Method** **Description**
- **append()** Adds an element at the end of the list
- **clear()** Removes all the elements from the list
- **copy()** Returns a copy of the list
- **count()** Returns the number of elements with the specified value
- **extend()**Add the elements of a list (or any iterable), to the end of the current list
- **index()** Returns the index of the first element with the specified value
- **insert()** Adds an element at the specified position
- **pop()** Removes the element at the specified position
- **remove()** Removes the first item with the specified value
- **reverse()** Reverses the order of the list
- **sort()** Sorts the list

Atmiya University
Faculty of Science,
Department of Computer Science & I.T.

Subject Name: 21UFSDE309 Data Science Using Python

By: Dr. Hiren Kavathiya

What is NumPy?

- NumPy is a Python library used for working with arrays.
- It also has functions for working in domain of linear algebra, fourier transform, and matrices.
- NumPy was created in 2005 by Travis Oliphant. It is an open source project and you can use it freely.
- NumPy stands for Numerical Python.

Why Use NumPy?

- n Python we have lists that serve the purpose of arrays, but they are slow to process.
- NumPy aims to provide an array object that is up to 50x faster than traditional Python lists.
- The array object in NumPy is called ndarray, it provides a lot of supporting functions that make working with ndarray very easy.
- Arrays are very frequently used in data science, where speed and resources are very important.

Why Use NumPy?

- n Python we have lists that serve the purpose of arrays, but they are slow to process.
- NumPy aims to provide an array object that is up to 50x faster than traditional Python lists.
- The array object in NumPy is called ndarray, it provides a lot of supporting functions that make working with ndarray very easy.
- Arrays are very frequently used in data science, where speed and resources are very important.

Installation of NumPy

- **Installation of NumPy**
- If you have Python and PIP already installed on a system, then installation of NumPy is very easy.
- Install it using this command:
- C:\Users*Your Name*>pip install numpy

Import NumPy

- **Import NumPy**
- Once NumPy is installed, import it in your applications by adding the import keyword:
- **import numpy**
- **Example**
- import numpy
  arr = numpy.array([1, 2, 3, 4, 5])
  print(arr)

Import NumPy

- **NumPy as np**
- NumPy is usually imported under the np alias.
- **alias:** In Python alias are an alternate name for referring to the same thing.
- Create an alias with the as keyword while importing:
- **import numpy as np**
- Now the NumPy package can be referred to as np instead of numpy.
- **Example**
- import numpy as np
  arr = np.array([1, 2, 3, 4, 5])
  print(arr)

NumPy as np

- **NumPy as np**
- NumPy is usually imported under the np alias.
- **alias:** In Python alias are an alternate name for referring to the same thing.
- Create an alias with the as keyword while importing:
- **import numpy as np**
- Now the NumPy package can be referred to as np instead of numpy.
- **Example**
- import numpy as np
  arr = np.array([1, 2, 3, 4, 5])
  print(arr)

Checking NumPy Version

- **Checking NumPy Version**
- The version string is stored under __version__ attribute.
- **Example**
- import numpy as np
  print(np.__version__)

NumPy Creating Arrays

- **Create a NumPy ndarray Object**
- NumPy is used to work with arrays. The array object in NumPy is called ndarray.
- We can create a NumPy ndarray object by using the array() function.
- **Example**
- import numpy as np
  arr = np.array([1, 2, 3, 4, 5])
  print(arr)
  print(type(arr))

Dimensions in Arrays

- **0-D Arrays**
- 0-D arrays, or Scalars, are the elements in an array. Each value in an array is a 0-D array.
- **Example**
- Create a 0-D array with value 42
- import numpy as np

```
arr = np.array(42)

print(arr)
```

Dimensions in Arrays

- **1-D Arrays**
- An array that has 0-D arrays as its elements is called uni-dimensional or 1-D array.
- These are the most common and basic arrays.
- **Example**
- Create a 1-D array containing the values 1,2,3,4,5:
- import numpy as np

```
arr = np.array([1, 2, 3, 4, 5])

print(arr)
```

Dimensions in Arrays

- **2-D Arrays**
- An array that has 1-D arrays as its elements is called a 2-D array.
- These are often used to represent matrix or 2nd order tensors.
- **Example**
- Create a 2-D array containing two arrays with the values 1,2,3 and 4,5,6:
- import numpy as np

```
arr = np.array([[1, 2, 3], [4, 5, 6]])

print(arr)
```

Dimensions in Arrays

- **3-D arrays**
- An array that has 2-D arrays (matrices) as its elements is called 3-D array.
- These are often used to represent a 3rd order tensor.
- **Example**
- Create a 3-D array with two 2-D arrays, both containing two arrays with the values 1,2,3 and 4,5,6:
- import numpy as np

```
arr = np.array([[[1, 2, 3], [4, 5, 6]], [[1, 2, 3], [4, 5, 6]]])

print(arr)
```

Dimensions in Arrays

- **Check Number of Dimensions?**
- NumPy Arrays provides the ndim attribute that returns an integer that tells us how many dimensions the array have.
- **Example**
- Check how many dimensions the arrays have:
- import numpy as np

```
a = np.array(42)
b = np.array([1, 2, 3, 4, 5])
c = np.array([[1, 2, 3], [4, 5, 6]])
d = np.array([[[1, 2, 3], [4, 5, 6]], [[1, 2, 3], [4, 5, 6]]])

print(a.ndim)
print(b.ndim)
print(c.ndim)
print(d.ndim)
```

Dimensions in Arrays

- **Higher Dimensional Arrays**
- An array can have any number of dimensions.
- When the array is created, you can define the number of dimensions by using the ndmin argument.
- **Example**
- Create an array with 5 dimensions and verify that it has 5 dimensions:
- import numpy as np

```
arr = np.array([1, 2, 3, 4], ndmin=5)

print(arr)
print('number of dimensions :', arr.ndim)
```

NumPy Array Indexing

- **Access Array Elements**
- Array indexing is the same as accessing an array element.
- You can access an array element by referring to its index number.
- The indexes in NumPy arrays start with 0, meaning that the first element has index 0, and the second has index 1 etc.
- **Example**
- Get the first element from the following array:
- import numpy as np

```
arr = np.array([1, 2, 3, 4])

print(arr[0])
```

NumPy Array Indexing

- **Access 2-D Arrays**
- To access elements from 2-D arrays we can use comma separated integers representing the dimension and the index of the element.
- Think of 2-D arrays like a table with rows and columns, where the row represents the dimension and the index represents the column.
- **Example**
- Access the element on the first row, second column:
- import numpy as np

```
arr = np.array([[1,2,3,4,5], [6,7,8,9,10]])

print('2nd element on 1st row: ', arr[0, 1])
```

NumPy Array Indexing

- **Access 3-D Arrays**
- To access elements from 3-D arrays we can use comma separated integers representing the dimensions and the index of the element.
- **Example**
- Access the third element of the second array of the first array:
- import numpy as np

```
arr = np.array([[[1, 2, 3], [4, 5, 6]], [[7, 8, 9], [10, 11, 12]]])

print(arr[0, 1, 2])
```

NumPy Array Indexing

- **Negative Indexing**
- Use negative indexing to access an array from the end.
- **Example**
- Print the last element from the 2nd dim:
- import numpy as np

```
arr = np.array([[1,2,3,4,5], [6,7,8,9,10]])

print('Last element from 2nd dim: ', arr[1, -1])
```

NumPy Array Slicing

- **Slicing arrays**
- Slicing in python means taking elements from one given index to another given index.
- We pass slice instead of index like this: [*start*:*end*].
- We can also define the step, like this: [*start*:*end*:*step*].
- **Example**
- Slice elements from index 1 to index 5 from the following array:
- import numpy as np

```
arr = np.array([1, 2, 3, 4, 5, 6, 7])

print(arr[1:5])
```

NumPy Array Slicing

- **Negative Slicing**
- Use the minus operator to refer to an index from the end:
- **Example**
- Slice from the index 3 from the end to index 1 from the end:
- import numpy as np

```
arr = np.array([1, 2, 3, 4, 5, 6, 7])

print(arr[-3:-1])
```

NumPy Array Slicing

- **Slicing 2-D Arrays**
- **Example**
- From the second element, slice elements from index 1 to index 4 (not included):
- import numpy as np

```
arr = np.array([[1, 2, 3, 4, 5], [6, 7, 8, 9, 10]])

print(arr[1, 1:4])
```

NumPy Data Types

- **Data Types in Python**
- By default Python have these data types:
- **strings** - used to represent text data, the text is given under quote marks. e.g. "ABCD"
- **integer** - used to represent integer numbers. e.g. -1, -2, -3
- **float** - used to represent real numbers. e.g. 1.2, 42.42
- **boolean** - used to represent True or False.

NumPy Data Types

- **Checking the Data Type of an Array**
- The NumPy array object has a property called dtype that returns the data type of the array:
- **Example**
- Get the data type of an array object:
- import numpy as np

```
arr = np.array([1, 2, 3, 4])

print(arr.dtype)
```

NumPy Data Types

- **Converting Data Type on Existing Arrays**
- The best way to change the data type of an existing array, is to make a copy of the array with the astype() method.
- The astype() function creates a copy of the array, and allows you to specify the data type as a parameter.
- The data type can be specified using a string, like 'f' for float, 'i' for integer etc. or you can use the data type directly like float for float and int for integer

NumPy Data Types

- **Example**
- Change data type from float to integer by using 'i' as parameter value:
- import numpy as np

```
arr = np.array([1.1, 2.1, 3.1])

newarr = arr.astype('i')

print(newarr)
print(newarr.dtype)
```

NumPy Data Types

- **Example**
- Change data type from float to integer by using int as parameter value:
- import numpy as np

```
arr = np.array([1.1, 2.1, 3.1])

newarr = arr.astype(int)

print(newarr)
print(newarr.dtype)
```

NumPy Data Types

- **Example**
- Change data type from integer to boolean:
- import numpy as np

```
arr = np.array([1, 0, 3])

newarr = arr.astype(bool)

print(newarr)
print(newarr.dtype)
```

Operations on NumPy array

- **NumPy Array Shape**
- **Get the Shape of an Array**
- NumPy arrays have an attribute called shape that returns a tuple with each index having the number of corresponding elements.
- **Example**
- Print the shape of a 2-D array:
- import numpy as np

```
arr = np.array([[1, 2, 3, 4], [5, 6, 7, 8]])

print(arr.shape)
```

Operations on NumPy array

- **NumPy Array Reshaping**
- **eshaping arrays**
- Reshaping means changing the shape of an array.
- The shape of an array is the number of elements in each dimension.
- By reshaping we can add or remove dimensions or change number of elements in each dimension.
- **Reshape From 1-D to 2-D**
- **Example**
- Convert the following 1-D array with 12 elements into a 2-D array.
- The outermost dimension will have 4 arrays, each with 3 elements:
- import numpy as np

```
arr = np.array([1, 2, 3, 4, 5, 6, 7, 8, 9, 10, 11, 12])

newarr = arr.reshape(4, 3)

print(newarr)
```

Operations on NumPy array

- **Can We Reshape Into any Shape?**
- Yes, as long as the elements required for reshaping are equal in both shapes.
- We can reshape an 8 elements 1D array into 4 elements in 2 rows 2D array but we cannot reshape it into a 3 elements 3 rows 2D array as that would require 3x3 = 9 elements.
- **Example**
- Try converting 1D array with 8 elements to a 2D array with 3 elements in each dimension (will raise an error):
- import numpy as np

```
arr = np.array([1, 2, 3, 4, 5, 6, 7, 8])

newarr = arr.reshape(3, 3)

print(newarr)
```

Operations on NumPy array

- **NumPy Joining Array**
- **Joining NumPy Arrays**
- Joining means putting contents of two or more arrays in a single array.
- # Joining with empty separator
- list1 = ['A', 'T', 'M', 'I', 'Y','A']
- print("".join(list1))

- # Joining with string
- list1 = " ATMIYA "
- print("$".join(list1))

Operations on NumPy array

- **NumPy Joining Array**
- # elements in tuples
- list1 = ('1', '2', '3', '4')

- # put any characher to join
- s = "-"

- # joins elements of list1 by '-'
- # and stores in string s
- s = s.join(list1)

- # join use to join a list of
- # strings to a separator s
- print(s)

Operations on NumPy array

- **Splitting NumPy Arrays**
- Splitting is reverse operation of Joining.
- Joining merges multiple arrays into one and Splitting breaks one array into multiple.
- We use array_split() for splitting arrays, we pass it the array we want to split and the number of splits.
- **Example**
- Split the array in 3 parts:
- import numpy as np

```
arr = np.array([1, 2, 3, 4, 5, 6])

newarr = np.array_split(arr, 3)

print(newarr)
```

Operations on NumPy array

- text = 'ATMIYA form RAJKOT'

- # Splits at space
- print(text.split())

- word = 'ATMIYA, form, RAJKOT'

- # Splits at ','
- print(word.split(','))

- word = 'ATMIYA:form:RAJKOT'

- # Splitting at ':'
- print(word.split(':'))

- word = 'ATMIYARAJKOTGUJARATINDIA'

- # Splitting at A
- print(word.split('A'))

Operations on NumPy array

- **Searching Arrays**
- You can search an array for a certain value, and return the indexes that get a match.
- To search an array, use the where() method.
- **Example**
- Find the indexes where the value is 4:
- import numpy as np

```
arr = np.array([1, 2, 3, 4, 5, 4, 4])

x = np.where(arr == 4)

print(x)
```

Operations on NumPy array

- **txt = "Hello, welcome to my world."**
- **x = txt.find("to")**
- **print(x)**

Operations on NumPy array

- **Sorting Arrays**
- Sorting means putting elements in an *ordered sequence*.
- *Ordered sequence* is any sequence that has an order corresponding to elements, like numeric or alphabetical, ascending or descending.
- The NumPy ndarray object has a function called sort(), that will sort a specified array.
- **Example**
- Sort the array:
- import numpy as np

```
arr = np.array([3, 2, 0, 1])

print(np.sort(arr))
```

Operations on NumPy array

- **Sorting Arrays**
- Sorting means putting elements in an *ordered sequence*.
- *Ordered sequence* is any sequence that has an order corresponding to elements, like numeric or alphabetical, ascending or descending.
- The NumPy ndarray object has a function called sort(), that will sort a specified array.
- **Example**
- Sort the array:
- import numpy as np

```
arr = np.array([3, 2, 0, 1])

print(np.sort(arr))
```

Atmiya University Rajkot

Operations on NumPy array

- **Filtering Arrays**
- Getting some elements out of an existing array and creating a new array out of them is called *filtering*.
- In NumPy, you filter an array using a *boolean index list*.
- If the value at an index is True that element is contained in the filtered array, if the value at that index is False that element is excluded from the filtered array.
- **Example**
- Create an array from the elements on index 0 and 2:
- import numpy as np

```
arr = np.array([41, 42, 43, 44])

x = [True, False, True, False]

newarr = arr[x]

print(newarr)
```

Atmiya University
Faculty of Science,
Department of Computer Science & I.T.

Subject Name: 21UFSDE309 Data Science Using Python

By: Dr. Hiren Kavathiya

Introduction to Pandas in Python

- Pandas is an open-source library that is made mainly for working with relational or labeled data both easily and naturally.
- It provides various data structures and operations for manipulating numerical data and time series.
- This library is built on top of the NumPy library.
- Pandas is fast and it has high performance & productivity for users.

Introduction to Pandas in Python

- **History:** Pandas were initially developed by Wes McKinney in 2008 while he was working at AQR Capital Management.
- He convinced the AQR to allow him to open source the Pandas.
- Another AQR employee, Chang She, joined as the second major contributor to the library in 2012.
- Over time many versions of pandas have been released. The latest version of the pandas is 1.4.1

Introduction to Pandas in Python

- **Advantages**
- Fast and efficient for manipulating and analyzing data.
- Data from different file objects can be loaded.
- Easy handling of missing data (represented as NaN) in floating point as well as non-floating point data
- Size mutability: columns can be inserted and deleted from DataFrame and higher dimensional objects
- Data set merging and joining.
- Flexible reshaping and pivoting of data sets
- Provides time-series functionality.
- Powerful group by functionality for performing split-apply-combine operations on data sets.

What is Matplotlib?

- Matplotlib is a low level graph plotting library in python that serves as a visualization utility.
- Matplotlib was created by John D. Hunter.
- Matplotlib is open source and we can use it freely.
- Matplotlib is mostly written in python, a few segments are written in C, Objective-C and Javascript for Platform compatibility.

What is Matplotlib?

- Matplotlib is a low level graph plotting library in python that serves as a visualization utility.
- Matplotlib was created by John D. Hunter.
- Matplotlib is open source and we can use it freely.
- Matplotlib is mostly written in python, a few segments are written in C, Objective-C and Javascript for Platform compatibility.

What is Matplotlib?

- **Installation of Matplotlib**
- If you have Python and PIP already installed on a system, then installation of Matplotlib is very easy.
- Install it using this command:
- C:\Users*Your Name*>pip install matplotlib

What is Matplotlib?

- **Import Matplotlib**
- Once Matplotlib is installed, import it in your applications by adding the import *module* statement:
- **import matplotlib**

- **Checking Matplotlib Version**
- The version string is stored under __version__ attribute.
- **Example**
- import matplotlib
  print(matplotlib.__version__)

What is Data Structure in Pandas?

- Pandas is divided into three data structures when it comes to dimensionality of an array. These data structures are:
- Series
- DataFrame
- Panel

What is Data Structure in Pandas?

Data Structure	Dimensions
Series	1D
DataFrame	2D
Panel	3D

- **Series** and **Data Frames** are the most widely used data structures based on the usage and problem solving sets in data science. If we look at these data structures in terms of a spreadsheet then Series would be a single column of an excel sheet, whereas DataFrame will have rows and columns and be a sheet itself.

What is a Series in Pandas?

- Pandas series is a one dimensional data structure which can have values of integer, float and string. We use series when we want to work with a single dimensional array. It is important to note that series cannot have multiple columns. It only holds one column just like in an excel sheet. Series does have an index as an axis label. You can have your own index labels by customizing the index values.

What is a Series in Pandas?

- This is Series

Name
Dhyey
Krishna
Kishan
Radha
Shyam

What is a Series in Pandas?

- **Creating a Series in Pandas**
- Pandas Series can be created in different ways from MySQL table, through excel worksheet (CSV) or from an array, dictionary, list etc. Let's look at how to create a series. Let's import Pandas first into the python file or notebook that you are working in:
- **import pandas as pd**
- **ps = pd.Series([1,2,3,4,5])**
- **print(ps)**

Python

Unit-1

Atmiya University
Rajkot

Introduction of Python?

- **Python is a high-level, interpreted, interactive and object-oriented scripting language.**
- Python is designed to be **highly readable**. It uses English keywords frequently where as other languages use punctuation, and it has fewer syntactical constructions than other languages.
- **Python is Interpreted:** Python is processed at runtime by the interpreter. You do not need to compile your program before executing it. This is similar to PERL and PHP.
- **Python is Interactive:** You can actually sit at a Python prompt and interact with the interpreter directly to write your programs.
- **Python is Object-Oriented:** Python supports Object-Oriented style or technique of programming that encapsulates code within objects.
- **Python is a Beginner's Language**: Python is a great language for the beginner-level programmers and supports the development of a wide range of applications from simple text processing to WWW browsers to games.

Atmiya University
Rajkot

Python…High Level Language

- Python is an example of a high-level language; other high-level languages you might have heard of are C++, PHP, Pascal, C#, and Java.
- Thus, programs written in a high-level language have to be translated into something more suitable before they can run.
- It is much easier to program in a high-level language so programs take less time to write, they are shorter and easier to read, and they are more likely to be correct.
- Portable, meaning that they can run on different kinds of computers with few or no modifications.

Atmiya University Rajkot

Python…Interpreted Language

- The engine that translates and runs Python program is called the **Python Interpreter**: There are two ways to use it:
- immediate mode and script mode. In immediate mode, you type Python expressions into the Python Interpreter window, and the interpreter immediately shows the result:

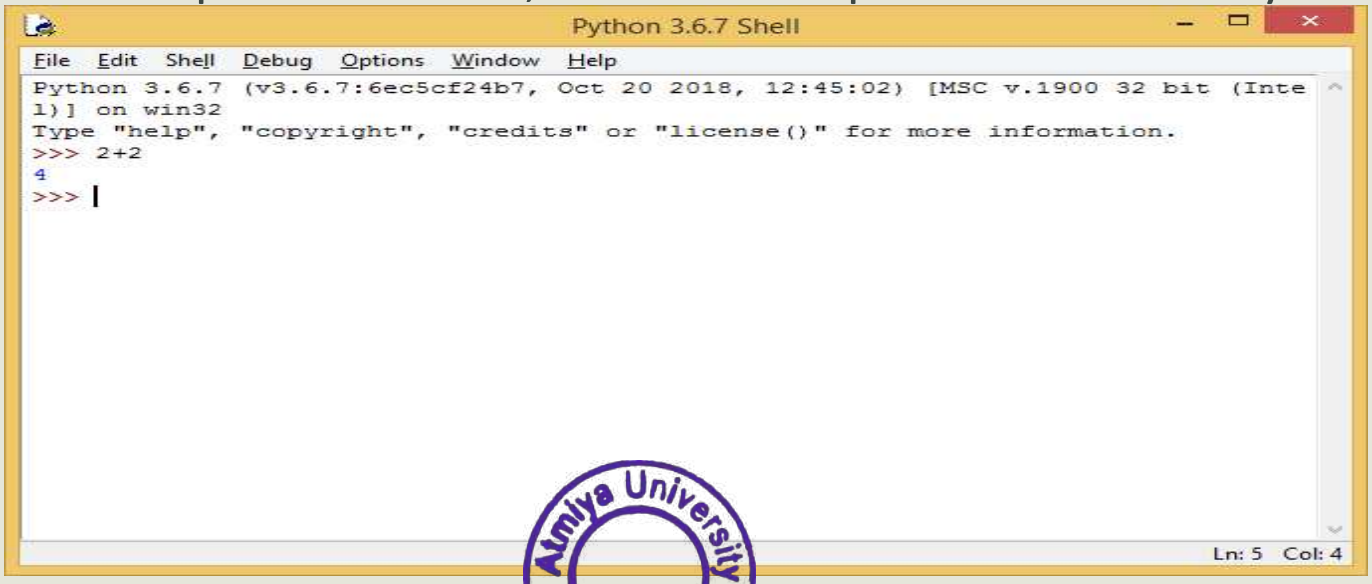

Atmiya University Rajkot

Pyhton…

- The **>>>** is called the Python prompt. The interpreter uses the prompt to indicate that it is ready for instructions.
- We typed 2 + 2, and the interpreter evaluated our expression, and replied 4, and on the next line it gave a new prompt, indicating that it is ready for more input.
- Alternatively, you can write a program in a file and use the interpreter to execute the contents of the file. Such a file is called a script.
- **Files** have the advantage that they can be saved to disk, printed, and so on.
- Working **directly** in the interpreter is convenient for testing short bits of code because you get **immediate output**.

Atmiya University Rajkot

Python History

- Invented at the National Research Institute for Mathematics and Computer Science in the Netherlands, early 90s by Guido Van Rossum
- Python was conceived in the late 1980s and its implementation was started in December 1989
- Python is derived from many other languages, including ABC, Modula-3, C, C++, Algol-68, SmallTalk, Unix shell, and other scripting languages.
- Open sourced from beginning
- Considered a scripting language, but is much more Scalable, object oriented and functional from the beginning
- Used by Google from the beginning

Atmiya University Rajkot

History Of Python

- Author is Guido Van Rossum
- Convinced in Late 1980
- Finally released in 1991
- Start implementation in December 1989 at CWI in Netherland.
- Successor of ABC Programming language.
- Name came from BBC's TV Show – 'Monty Python's Flying Circus'

Atmiya University
Rajkot

Python Version

Python Version	Released Date
Python 1.0	January 1994
Python 1.5	December 31, 1997
Python 1.6	September 5, 2000
Python 2.0	October 16, 2000
Python 2.1	April 17, 2001
Python 2.2	December 21, 2001
Python 2.3	July 29, 2003
Python 2.4	November 30, 2004
Python 2.5	September 19, 2006

Python Version	Released Date
Python 2.6	October 1, 2008
Python 2.7	July 3, 2010
Python 3.0	December 3, 2008
Python 3.1	June 27, 2009
Python 3.2	February 20, 2011
Python 3.3	September 29, 2012
Python 3.4	March 16, 2014
Python 3.5	September 13, 2015
Python 3.6	December 23, 2016

Python 3.7	June 27, 2018

Atmiya University
Rajkot

Python Features:

- Easy-to-learn: Python has few keywords, simple structure, and a clearly defined syntax.
- Easy-to-read: Python code is more clearly defined and visible to the eyes.
- Easy-to-maintain: Python's source code is fairly easy-to-maintain.
- A broad standard library: Python's bulk of the library is very portable and cross- platform compatible on UNIX, Windows, and Macintosh.
- Interactive Mode: Python has support for an interactive mode which allows interactive testing and debugging of snippets of code.
- Portable: Python can run on a wide variety of hardware platforms and has the same interface on all platforms.

Atmiya University Rajkot

Features…

- Extendable: You can add low-level modules to the Python interpreter. These modules enable programmers to add to or customize their tools to be more efficient.
- Databases: Python provides interfaces to all major commercial databases.
- GUI Programming: Python supports GUI applications that can be created and ported to many system calls, libraries, and windows systems, such as Windows MFC, Macintosh, and the X Window system of UNIX.
- Scalable: Python provides a better structure and support for large programs than shell scripting.

Atmiya University
Rajkot

Where Python is USED??

- Google makes extensive use of Python in its web search system, and employs Python's creator.
- Intel, Cisco, HP, Seagate, Qualcomm, and IBM use Python for hardware testing.
- ESRI(Environmental **Systems** Research Institute) uses Python as an end-user customization tool for its popular GIS mapping products.
- The YouTube video sharing service is largely written in Python.
- Widely used (Google, NASA, Yahoo, Electronic Arts, some UNIX scripts etc.)

Atmiya University
Rajkot

Applications of Python

Atmiya University Rajkot

Installing Python

- Python is pre-installed on most Unix systems, including Linux and MAC OS X
- But for Windows Operating Systems, user can download from the https://www.python.org/downloads/
- Form the above link download latest version of python IDE and install.

Atmiya University Rajkot

Compiling and interpreting

- Many languages require you to compile (translate) your program into a form that the machine understands.

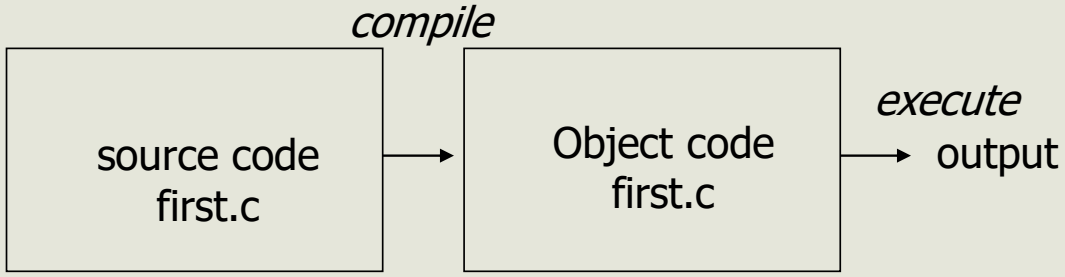

- Python is instead directly interpreted into machine instructions.

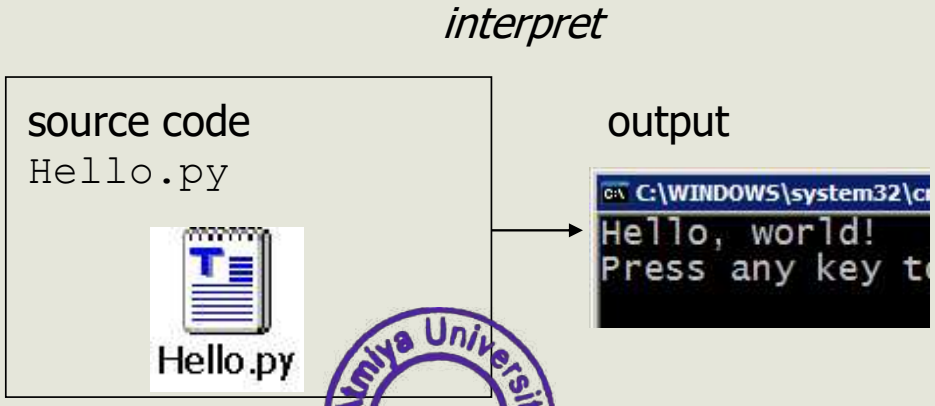

Amiya University Rajkot

Reserved Words

- The following list shows the Python keywords. These are reserved words and you cannot use them as constant or variable or any other identifier names.
- All the Python keywords contain lowercase letters only.

and	def	If	not	return
break	assert	exec	in	or
try	finally	del	import	pass
for	else	elif	with	print
is	continue	global	except	Raise
from	lambda			

Atmiya University Rajkot

Python Identifiers

- A Python identifier is a name used to identify a variable, function, class, module or other object.
- An identifier starts with a letter A to Z or a to z or an underscore (_) followed by zero or more letters, underscores and digits (0 to 9).
- Python does not allow punctuation characters such as @, $, and % within identifiers.
- Python is a **case sensitive programming** language

Atmiya University Rajkot

Basic Syntax

```
# Python program to print
print("Hello Student")

# Python program to declare variables
myNumber = 3
print(myNumber)

myNumber2 = 4.5
print(myNumber2)

myNumber ="helloworld"
print(myNumber)
```


Atmiya University Rajkot

Python Variables

- Variables are containers for storing data values.
- Example

```
x = 10
y = “hello"
print(x)
print(y)
x, y, z = “Python", “Java", “Oracle“
x = y = z = “Python"
```


Atmiya University Rajkot

Data Types and Operators

Atmiya University
Rajkot

Indentation

- Indentation means adding white space before a statement.
- Most of the programming languages like C, C++, Java use braces { } to define a block of code.
- Python use indentation to define a block of code.
- Whitespace is used for indentation. All statements with the same distance to the right belong to the same block of code.
- If a block has to be more deeply nested, it is simply indented further to the right.

Atmiya University
Rajkot

Data types of python

- a=10
- b="Hi Python"
- c = 10.5
- print(type(a)) # int
- print(type(b)) # str
- print(type(c)) # float

Atmiya University
Rajkot

Python Data Types

Datatypes (Built-in) in Python

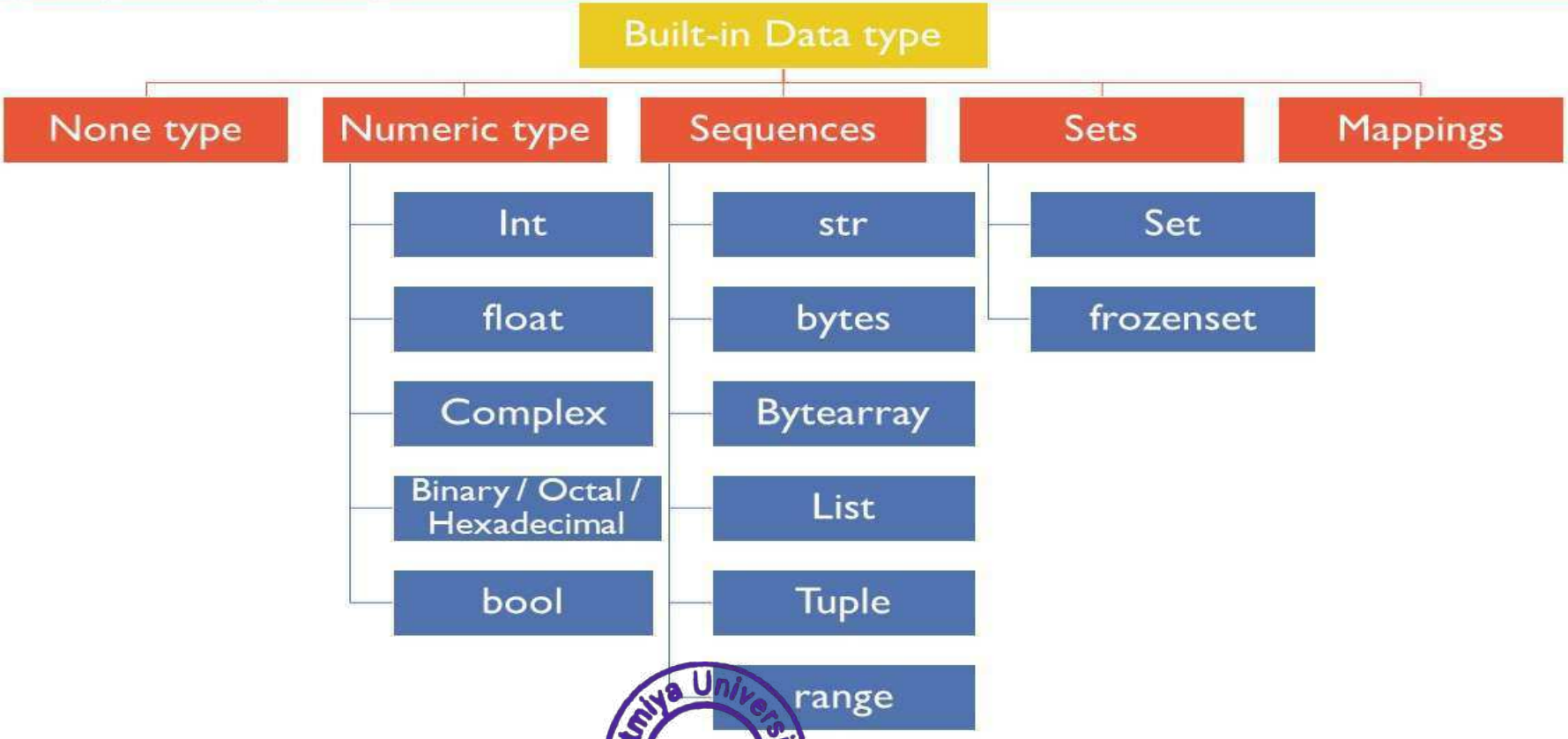

Atmiya University Rajkot

Data types in Python

- Numbers (int and float)
  - int (signed integers Ex. 10)
  - long (long integers, they can also be represented in octal and hexa Ex. 0122L)
  - float (floating point real values Ex. 15.20)
  - complex (complex numbers Ex. 3e+26J)
- Sequence Data Type : String (char and string) , List, Tuple
- Dictionary
- Set
- Boolean

Atmiya University Rajkot

Integer Number

- positive or negative whole numbers without decimal point.
- no limit to how long an integer value.

Atmiya University
Rajkot

Float Number

- real numbers.
- decimal point dividing the integer and fractional parts.
- scientific notation
- E or e indicating the power of 10

Atmiya University
Rajkot

Complex

- Complex numbers are written with a "j" as the imaginary part:
- x=5+7j
- print(x)
- print(x.real)
- print(x.imag)
- **Output:**
- (5+7j)
- 5.0
- 7.0

Atmiya University
Rajkot

Literals in Python

- String literals :: "hello" , '12345'
- Int literals :: 0,1,2,-1,-2
- Long literals :: 89675L
- Float literals :: 3.14
- Complex literals :: 12j
- Boolean literals :: True or False
- Special literals :: None

Atmiya University
Rajkot

Representing Binary, Octal and Hexadecimal Numbers

- A binary number should be written by prefixing **0b** or **0B** before the value. For example,
  - 0b100011
  - 0B10100010
- Hexadecimal numbers are written by prefixing **0x** or **0X** before the value. For example,
  - 0xA180
  - 0X11fb
- Similarly, Octal numbers are indicated by prefix **0o** or **0O** before the value. For example,
  - 0O145
  - 0o773

Atmiya University Rajkot

Boolean

- Booleans represent one of two values: True or False.
- The bool() function allows you to evaluate any value, and give you True or False in return.
- Example
- Evaluate a string and a number:
- print(bool("Hello"))
  print(bool(15))

True

Atmiya University
Rajkot

Sequence Type : String

- A string is a **sequence of characters**.
- A character is simply a symbol. For example, the English language has 26 characters.
- Computers do not deal with characters**, they deal with numbers (binary).**
- This conversion of character to a number is called **encoding,** and the reverse process is **decoding**.
- **ASCII and Unicode** are some of the popular encoding used.
- In Python, string is a sequence of **Unicode characters**.
- Unicode was introduced to include every character in all languages and bring uniformity in encoding.

Atmiya University Rajkot

Sequence Type (String, List, Tuple): **String**

- The string can be defined as the sequence of characters represented in the quotation marks. In Python, we can use **single, double, or triple quotes** to define a string.

```
# all of the following are equivalent
#Creating String using single quotes
my_string = 'Hello'
print(my_string)

#Creating String using double quotes
my_string = "Hello"
print(my_string)

#Creating String using tripple quotes
my_string = '''Hello'''
print(my_string)

# triple quotes string can extend multiple lines
my_string = """Hello, welcome to
the world of Python"""
print(my_string)
```

Atmiya University Rajkot

How to access characters in a String?

- We can access **individual characters** using **indexing** and a **range of characters** using **slicing**.
- **Index starts from 0.**
- Trying to access a character out of index range will raise an **IndexError**.
- The index must be an **integer**. We can't use float or other types, this will result into **TypeError.**

```
s="atmiya"
print('s = ', s)

#first character
print('s[0] = ', s[0])

#slicing 2nd to 5th character (tmiy)
print('s[1:5] = ', s[1:5])

# index must be in range
print(s[10])        #IndexError: string index out of range

# index must be an integer
print(s[1.5])       #TypeError: string indices must be integers
```

Atmiya University Rajkot

How to access characters in a String?

- Python allows **negative indexing** for its sequences.
- The index of -1 refers to the last item, -2 to the second last item and so on.
- We can access a range of items in a string by using the **slicing operator (colon).**

```
s="atmiya university"
print('s = ', s)

#last character
print('s[-1] = ', s[-1])

#slicing 7th to 2nd last character
print('s[7:-2] = ', s[7:-2])
```

Atmiya University Rajkot

Iterating through a string

- Using a for loop we can iterate through a string.
- For example, count number of ‘l’ in to the string.

```
count = 0
for letter in 'Hello World':
    if(letter == 'l'):
        count += 1
print(count,'letters found')
```

Atmiya University
Rajkot

String Formatting

- The **format()** method that is available with the string object is very versatile and powerful in formatting strings.
- Format strings contain **curly braces {}** as placeholders or replacement fields which get replaced.
- We can use positional arguments or keyword arguments to specify the order.

```
# default(implicit) order
default_order = "{}, {} and {}".format('John','Bill','Sean')
print('\n--- Default Order ---')
print(default_order)

# order using positional argument
positional_order = "{1}, {0} and {2}".format('John','Bill','Sean')
print('\n--- Positional Order ---')
print(positional_order)

# order using keyword argument
keyword_order = "{s}, {b} and {j}".format(j='John',b='Bill',s='Sean')
print('\n--- Keyword Order ---')
print(keyword_order)
```

Atmiya University Rajkot

Formatting....

- We can even format strings like the old style used in the C programming language. We use the **% operator** to accomplish this.

```
a=10
b=20.554545454

#Formatting single variable
print("The value of A is %d"%a)

#Formatting multiple variables
print("The value of A is %d and value of B is %f"%(a,b))

#Formatting fractional values
print('The value of x is %.3f' %x)  #will display only 3 decimal values
```

Atmiya University Rajkot

Reversing Strings Through Slicing

- To slice a string, you can use the following syntax: **a_string[start:stop:step]**
- All the offsets are optional, and they have the following default values:
- **Offset Default Value start 0 stop len(a_string) step 1**
- Here, start represents the index of the first character in the slice, while stop holds the index that stops the slicing operation. The third offset, step, allows you to decide how many characters the slicing will jump through on each iteration.

Atmiya University Rajkot

Example…

```
letters = "AaBbCcDd"
print(letters[::])  #'AaBbCcDd'
print(letters[::-1])  #'dDcCbBaA'
print(letters[:])  #'AaBbCcDd'
print(letters[::2])  #'ABCD'
print(letters[1::2])  #'abcd'
```

Atmiya University Rajkot

Sequence Type (String, List, Tuple): **String**

```
str1 = ‘Hello Students' #string str1
str2 = ' how are you' #string str2
print (str1[0:2]) #printing first two character using slice operator
print (str1[4]) #printing 4th character of the string
print (str1*2) #printing the string twice
print (str1 + str2) #printing the concatenation of str1 and str2
```

Atmiya University
Rajkot

Sequence Type: List

- Lists are used to store multiple items in a single variable.
- Lists are one of 4 built-in data types in Python used to store collections of data.
- In Python programming, a list is created by placing all the items (elements) inside a **square bracket [ ]**, separated by commas.
- It can have any number of items and they may be of different types (integer, float, string etc.).
- List items are **ordered**, **changeable**, and **allow duplicate values**.

Atmiya University Rajkot

Creation of LIST

```
# empty list
my_list = []

# list of integers
my_list = [1, 2, 3]

# list with mixed datatypes
my_list = [1, "Hello", 3.4]
```

```
# nested list
my_list = ["mouse", [8, 4, 6], ['a']]

#nested list
my_list = [1,"meera",995556642,[70,75,86,66,48],77.56]
print(my_list)
```

Atmiya University Rajkot

How to access elements from a List? Indexing

```
my_list = ['p','r','o','b','e']
# Output: p
print(my_list[0])

# Output: o
print(my_list[2])

# Output: e
print(my_list[4])

my_list[4.0]      # Error! Only integer can be used for indexing
```

Atmiya University Rajkot

Indexing with nested list…

```
# Nested List
n_list = ["Happy", [2,0,1,5]]

# Nested indexing

# Output: a
print(n_list[0][1])

# Output: 5
print(n_list[1][3])
```

Atmiya University
Rajkot

Negative Indexing…

```
my_list = ['p','r','o','b','e']

# Output: e
print(my_list[-1])

# Output: p
print(my_list[-5])
```

How to slice lists in python?

```
my_list = ['p','r','o','g','r','a','m','i','z']
# elements 3rd to 5th
print(my_list[2:5])

# elements beginning to 4th
print(my_list[:-5])

# elements 6th to end
print(my_list[5:])

# elements beginning to end
print(my_list[:])

# reverse elements
print(my_list[::-1])
```

Atmiya University Rajkot

How to change or add elements to a List?

- Lists are **mutable**, meaning their elements **can be changed** unlike string or tuple.
- We can use **assignment operator (=)** to change an item or a range of items.

```
my_list = [2, 4, 6, 8]

# change the 1st item
my_list[0] = 1

# Output: [1, 4, 6, 8]
print(my_list)

# change 2nd to 4th items
my_list[1:4] = [3, 5, 7]

# Output: [1, 3, 5, 7]
print(my_list)
```

Atmiya University Rajkot

Append and Extend method of list

- We can add one item to a list using the **append()** method or add several items using **extend()** method.

```
my_list = [1, 3, 5]
my_list.append(7)        # Output: [1, 3, 5, 7]
print(my_list)

my_list.extend([9, 11, 13]) # Output: [1, 3, 5, 7, 9, 11, 13]
print(my_list)
```

Atmiya University Rajkot

+ and * operators with list

- We can also use **+ operator** to combine two lists. This is also called concatenation.
- The *** operator** repeats a list for the given number of times.

```
my_list = [1, 3, 5]

print(my_list + [9, 7, 5])  # Output: [1, 3, 5, 9, 7, 5]

print(["re"] * 3)           #Output: ["re", "re", "re"]
```

Atmiya University Rajkot

insert( ) with List

- we can insert one item at a desired location by using the method **insert()** or insert multiple items by squeezing it into an empty slice of a list.

```
my_list = [1, 9]
#insert(position, element)
my_list.insert(1,3)      # Output: [1, 3, 9]
print(my_list)

my_list[2:2] = [5, 7]    # Output: [1, 3, 5, 7, 9]
print(my_list)
```

Atmiya University Rajkot

How to delete or remove elements from a List?

- We can delete one or more items from a list using the keyword del. It can even delete the list entirely.

```
my_list = ['p','r','o','b','l','e','m']

# delete one item
del my_list[2]
print(my_list)        # Output: ['p', 'r', 'b', 'l', 'e', 'm']

# delete multiple items
del my_list[1:5]
print(my_list)        # Output: ['p', 'm']

# delete entire list
del my_list
print(my_list)        # Error: List not defined
```

Aimiya University Rajkot

remove, pop and clear methods

- We can use **remove()** method to remove the given item or pop() method to remove an item at the given index.
- The **pop()** method removes and returns the last item if index is not provided. This helps us implement lists as stacks (first in, last out data structure).
- We can also use the **clear()** method to empty a list.

```
my_list = ['p','r','o','b','l','e','m']

# Removing an element
my_list.remove('p')
print(my_list)      # Output: ['r', 'o', 'b', 'l', 'e', 'm']

# Remove element 'o' from list
print(my_list.pop(1))
print(my_list)      # Output: ['r', 'b', 'l', 'e', 'm']

# Remove last element from a list
print(my_list.pop())
print(my_list)      # Output: ['r', 'b', 'l', 'e']

# Clearing list
my_list.clear()
```

Amity University Rajkot

List Length

- To determine how many items a list has, use the len() function:
- **Example**
- Print the number of items in the list:
  - thislist = ["apple", "banana", "cherry"]
  - print(len(thislist))
- **Output: 3**

Atmiya University Rajkot

Iteration of List

```
#List Iteration
fruits = ['apple','banana','mango']:
for i in fruits:
    print("I like",i)
```

Atmiya University
Rajkot

List Methods

Method	Description
append()	Add an element to the end of the list
extend()	Add all elements of a list to the another list
insert()	Insert an item at the defined index
remove()	Removes an item from the list
pop()	Removes and returns an element at the given index
clear()	Removes all items from the list
index()	Returns the index of the first matched item
count()	Returns the count of number of items passed as an argument

Atmiya University Rajkot

Methods…

Method	Description
sort()	Sort items in a list in ascending order
reverse()	Reverse the order of items in the list
copy()	Returns a shallow copy of the list
len()	Return the length (the number of items) in the list.
list()	Convert a collection (tuple, string, set, dictionary) to a list.
max()	Return the largest item in the list.
min()	Return the smallest item in the list
sum()	Return the sum of all elements in the list.

Atmiya University Rajkot

Tuple

- A tuple is a collection which is **ordered, unchangeable and allows duplicate values**.
- Tuples are used to store multiple items of any type like int, float and string in a single variable.
- Tuples are written with round brackets.
- Example :Create a Tuple
  - thistuple = ("apple", "banana", "cherry")
  - print(thistuple)
  - Output :- ('apple', 'banana', 'cherry')

Atmiya University Rajkot

Tuple…

```
# empty tuple
my_tuple = ()
print(my_tuple)

# tuple having integers
my_tuple = (1, 2, 3)
print(my_tuple)          # Output: (1, 2, 3)

# tuple with mixed datatypes
my_tuple = (1, "Hello", 3.4)
print(my_tuple)          # Output: (1, "Hello", 3.4)
```

```
# nested tuple
my_tuple = ("mouse", [8, 4, 6], (1, 2, 3))
print(my_tuple)          # Output: ("mouse", [8, 4, 6], (1, 2, 3))
```

Atmiya University Rajkot

Tuple…

```
# only parentheses is not enough
my_tuple = ("hello")
print(type(my_tuple))          # Output: <class 'str'>

# need a comma at the end
my_tuple = ("hello",)
print(type(my_tuple))          # Output: <class 'tuple'>

# parentheses is optional
my_tuple = "hello",
print(type(my_tuple))          # Output: <class 'tuple'>
```

Atmiya University Rajkot

Tuple…

```
# nested tuple
n_tuple = ("mouse", [8, 4, 6], (1, 2, 3))

# nested index
print(n_tuple[0][3])          # Output: 's'

# nested index
print(n_tuple[1][1])          # Output: 4
```

```
my_tuple = ('p','e','r','m','i','t')

print(my_tuple[-1])       # Output: 't'

print(my_tuple[-6])       # Output: 'p'
```

Atmiya University Rajkot

Indexing and Slicing

```
my_tuple = ('p','e','r','m','i','t')

print(my_tuple[0])          # Output: 'p'
print(my_tuple[5])          # Output: 't'

# index must be in range
print(my_tuple[6])          # IndexError: list index out of range
print(my_tuple[7:])         # Output: ('i', 'z')

# elements beginning to end
print(my_tuple[:])
# Output: ('p', 'r', 'o', 'g', 'r', 'a', 'm', 'i', 'z')
```

Atmiya University Rajkot

Iterating through Tuple

```
#Iterating Tuple
for name in ('John','Kate'):
    print("Hello",name)
```

Atmiya University
Rajkot

Tuples are immutable

- This means that elements of a tuple **cannot be changed** once it has been assigned.
- We can also assign a tuple to different values (reassignment).

```
my_tuple = (4, 2, 3, [6, 5])

# we cannot change an element
my_tuple[1] = 9 # TypeError: 'tuple' object does not support item assignment

# but item of mutable element can be changed
my_tuple[3][0] = 9
print(my_tuple)          # Output: (4, 2, 3, [9, 5])

# tuples can be reassigned
my_tuple = ('p','r','o','g','r','a','m','i','z')
print(my_tuple)
# Output: ('p', 'r', 'o', 'g', 'r', 'a', 'm', 'i', 'z')
```

Atmiya University Rajkot

Deleting a tuple

- As discussed above, we cannot change the elements in a tuple. That also means we cannot delete or remove items from a tuple.
- But deleting a tuple entirely is possible using the keyword del.

```
my_tuple = ('p','r','o','g','r','a','m','i','z')

# can't delete items
del my_tuple[3] # TypeError: 'tuple' object doesn't support item deletion

# can delete entire tuple
del my_tuple
print(my_tuple)         # NameError: name 'my_tuple' is not defined
```

Atmiya University Rajkot

Use of + and * with tuple

- We can use + operator to combine two tuples (concatenation).
- We can also repeat the elements in a tuple for a given number of times using the * operator.
- Both + and * operations result into a new tuple.

```
# Concatenation
print((1, 2, 3) + (4, 5, 6))    # Output: (1, 2, 3, 4, 5, 6)

# Repeat
print(("Repeat",) * 3)          # Output: ('Repeat', 'Repeat', 'Repeat')
```

Atmiya University Rajkot

Tuple Membership Test : IN and NOT IN

```
# Python program to show how to perform membership test for tuples
# Creating a tuple
tuple_ = ("Python", "Tuple", "Ordered", "Immutable", "Collection", "Ordered")
# In operator
print('Tuple' in tuple_)
print('Items' in tuple_)
# Not in operator
print('Immutable' not in tuple_)
print('Items' not in tuple_)
```

```
True
False
False
True
```

Atmiya University Rajkot

Methods of Tuple

Method	Description
index(x)	Return index of first item that is equal to x
count(x)	Return the number of items that is equal to x
len()	Return the length (the number of items) in the tuple.
tuple()	Convert an iterable (list, string, set, dictionary) to a tuple.
max()	Return the largest item in the tuple.
min()	Return the smallest item in the tuple
sum()	Return the sum of all elements in the tuple.

Atmiya University Rajkot

Methods…

```
my_tuple = ('a','p','p','l','e',)
# Count()
print(my_tuple.count('p'))        # Output: 2

# Index()
print(my_tuple.index('l'))        # Output: 3
```

Atmiya University
Rajkot

Range

- The range data type represents a sequence of numbers.
- The numbers in the range are not modifiable.
- Generally, range is used for repeating a for loop for a specific number of times.

```
#creating a range
r=range(10)
for i in r:
    print(i)          #Output:[0 1 2 3 4 5 6 7 8 9]
```

Atmiya University Rajkot

Range…

- The range () has three arguments:

range(start, stop, step)

- **Start :** it is an optional argument that represents the starting value of range. Default value is 0
- **Stop :** represents the ending value of range (excluding).
- **Stepsize** : it is an optional argument that represents the increment between each number in a range. Default value is 1.you can provide negative stepsize to reverse a range.

Atmiya University Rajkot

Set

- A set is an **unordered collection of elements** much like sets in Mathematics.
- The order of elements is not maintained in the sets.
- It means the elements may not appear in the same order as they are entered into the set.
- Moreover, a set **does not accept duplicate elements**
- There are two subtypes in sets:
  - **set**
  - **frozenset**

Atmiya University Rajkot

Set....

- To create a set, we should enter the elements separated by commas inside **curly braces { }**.

```
#creating a set
s={10,20,30,40,50,40}
print(s)      #Output : {50, 20, 40, 10, 30}
```

- Since sets are unordered, we cannot retrieve the elements using indexing and slicing operations.

```
s={10,20,30,40,50}
print(s[3])     #Output : TypeError: 'set' object is not subscriptable
print(s[0:3])   #Output : TypeError: 'set' object is not subscriptable
```

Atmiya University Rajkot

Update and Remove method with Set

- The **update()** method is used to add elements to a set.
- The **remove()** method is used to remove any particular element from a set.

```
s = {10,20,30,40,50,60}

#Adding new elements in a set
s.update([90,100])
print(s)     #Output : {50, 20, 90, 100, 40, 10, 60, 30}


#removing elements from a set
s.remove(30)
print(s)     #Output : {50, 20, 90, 100, 40, 10, 60}
```

Atmiya University Rajkot

frozenset Datatype

- The frozenset datatype is the same as the set datatype.
- The main difference is that the elements in the set can be modified; whereas, the elements of the frozenset **cannot be modified**.
- We can create a frozenset by passing a set to **frozenset()**.

```
s = {10,20,30,40,50,60}
fs=frozenset(s)
print(fs)    #Output: frozenset({50, 20, 40, 10, 60, 30})
```

Atmiya University Rajkot

Dictionary

- The data is stored as key-value pairs using a Python dictionary is called **Mapping**
  - This data structure is mutable
  - The components of dictionary were made using keys and values.
  - Keys must only have one component.
  - Values can be of any type, including integer, list, and tuple.
- The **key and its value should be separated by a colon (:)** and every **pair should be separated by a comma**.
- All the elements should be enclosed inside **curly brackets { }**.

Atmiya University Rajkot

Dictionary

```
#Creating an empty dictionary
my_dict={}

#Creating dictionary with elements
my_dict={101:"Meera", 102:"Disha", 103:"Falguni", 104:"Vaishali"}
print(my_dict)
#Output : {101: 'Meera', 102: 'Disha', 103: 'Falguni', 104: 'Vaishali'}
```

```
#Retrieve values of key 102
print(my_dict[102])        #Output: Disha
```

Atmiya University Rajkot

Add new element to dictionary

```
#Creating dictionary with elements
my_dict={101:"Meera", 102:"Disha", 103:"Falguni", 104:"Vaishali"}

#Adding New value to dictionary
my_dict[105]="Kamal"
print(my_dict)
#Output: {101: 'Meera', 102: 'Disha', 103: 'Falguni', 104: 'Vaishali', 105: 'Kamal'}
```

Atmiya University Rajkot

Change the value in to the dictionary

```
#Creating dictionary with elements
my_dict={101:"Meera", 102:"Disha", 103:"Falguni", 104:"Vaishali"}

#Update the old value in dictionary
print("Before Updation:",my_dict)
#Output: {101: 'Meera', 102: 'Disha', 103: 'Falguni', 104: 'Vaishali'}

my_dict[101]="Khyati"

print("After Updation:",my_dict)
#Output: {101: 'Khyati', 102: 'Disha', 103: 'Falguni', 104: 'Vaishali'}
```

Atmiya University Rajkot

Delete the element from Dictionary

```
#Creating dictionary with elements
my_dict={101:"Meera", 102:"Disha", 103:"Falguni", 104:"Vaishali"}

#Update the old value in dictionary
print("Before Deletion:",my_dict)
#Output: {101: 'Meera', 102: 'Disha', 103: 'Falguni', 104: 'Vaishali'}

del my_dict[101]

print("After Deletion:",my_dict)
#Output: {102: 'Disha', 103: 'Falguni', 104: 'Vaishali', 105: 'Kamal'}
```

Atmiya University Rajkot

Setting Data Type

- x = int(20)
- x = float(20.5)
- x = complex(1j)
- x = list(("apple", "banana", "cherry"))
- **x = tuple(("apple", "banana", "cherry"))**
- **x = dict(name="John", age=36)**
- **x = set(("apple", "banana", "cherry"))**
- x = bool(5)

Atmiya University
Rajkot

Python Data Types

- Here are four collection data types in the Python programming language:
- **List** is a collection which is **ordered, changeable** and **allows duplicate members.**
- **Tuple** is a collection which is **ordered**, **unchangeable** and **allows duplicate members.**
- **Set** is a collection which is **unordered, unchangeable, unindexed** and **No duplicate members**.
- **Dictionary** is a collection which is **ordered and changeable** and **No duplicate members.**

Atmiya University Rajkot

Simple Output – **print()**

- Print() -Output data to the standard output device (screen).
- Example:

```
print("Atmiya University-Rajkot")
```

Output:- Atmiya University-Rajkot

Atmiya University Rajkot

print() Example

```
a = 5
print('The value of a is', a)
```

Output:-The value of a 5

```
x=12.34574
print('The value of x is %3.2f‘,x)
```

Output: The value of x is 12.35

```
print('The value of x is %3.4f‘,x)
```

Output: The value of x is 12.3457

Atmiya University
Rajkot

input function

- input():- to allow take the input from the user at run-time.
- Syntax of input(): input([prompt])
- Example:
- num = input('Enter a number: ')
- print(“Number is:”,num)
- Output: **Enter a number:10**
- **Number is:10**

Atmiya University
Rajkot

input()....

- # two input 2 no and calculate sum
- a=int(input("enter first no..."))
- print(a)
- b=int(input("enter second no..."))
- print(b)
- c=a+b
- print("sum is",c)

Atmiya University
Rajkot

Operators

- An operator is a symbol that performs an operation.
- An Operator acts on some variables called **operands.**
- If an operator acts on a single variable it is called a **unary operator**.
- if an operator acts on two variables, it is called a **binary operator**.
- If an operator acts on three variables, then it is called **ternary operator**.

Atmiya University
Rajkot

Python Basic Operators

- Types of Operator
  - Arithmetic Operators
  - Assignment Operators
  - Relational Operators
  - Logical Operators
  - Boolean Operators
  - Bitwise Operators
  - Identity Operator
  - Membership Operator

Atmiya University
Rajkot

Arithmetic Operators

- Assume variable a holds 13 and variable b holds 5, then

Operator	Description	Example
+ Addition	Addition of number	a + b = 18
- Subtraction	Subtracts of number	a – b = 8
* Multiplication	Multiplication of number	a * b = 65
/ Division	Division of number	b/a = 2.6
% Modulus	Found the modulus	b % a =3
// Floor Division	Perform the division and return answer in integer	b//a= 2
** Exponent	Calculates exponent power value.	a**b=371293

Atmiya University Rajkot

Assignment Operators

Operator	Example
=	c = a + b
+=	c += a (c = c + a)
-=	c -= a (c = c - a)
*=	c *= a (c = c * a)
/=	c /= a (c = c / a)
**=	c**=a (c=c**a)
//=	c//=a (c=c//a)

Atmiya University Rajkot

Relational Operators

- For ex: a=10 and b= 20

Operator	Example
==	(a == b) is not true
!=	(a != b) is true
>	(a > b) is not true
<	(a < b) is true
>=	(a >= b) is not true
<=	(a <= b) is true

Atmiya University Rajkot

Logical Operators

- For ex: a=10 and b= 20

Operator	Example
and	(a and b) is true.
or	(a or b) is true
not	not(a and b) is false.

Atmiya University
Rajkot

Bitwise Operators

Operator	Name	Description	Syntax
&	Bitwise AND	Result bit 1,if both operand bits are 1;otherwise results bit 0.	**x & y**
|	Bitwise OR	Result bit 1,if any of the operand bit is 1; otherwise results bit 0.	**x | y**
~	Bitwise NOT	inverts individual bits	**~x**
^	Bitwise XOR	Results bit 1,if any of the operand bit is 1 but not both, otherwise results bit 0.	**x ^ y**
>>	Bitwise right shift	The left operand's value is moved toward the right by the number of bits specified by the right operand.	**x>>**
<<	Bitwise left shift	The left operand's value is moved toward the left by the number of bits specified by the right operand.	**x<<**

Atmiya University Rajkot

Python Identity Operators

- Identity operators compare the memory locations of two objects. There are two Identity operators explained below

Operator	Description	Example
is	Evaluates to true if the variables on either side of the operator point to the same object and false otherwise.	x is y, here is results in 1 if id(x) equals id(y).
is not	Evaluates to false if the variables on either side of the operator point to the same object and true otherwise	x is not y, here is not results in 1 if id(x) is not equal to id(y).

Atmiya University Rajkot

Python Membership Operators

- Python's membership operators test for membership in a sequence, such as strings, lists, or tuples. There are two membership operators as explained below

Operator	Description	Example
in	Evaluates to true if it finds a variable in the specified sequence and false otherwise..	x in y, here in results in a 1 if x is a member of sequence y.
not in	Evaluates to true if it does not finds a variable in the specified sequence and false otherwise.	x not in y, here not in results in a 1 if x is not a member of sequence y.

Atmiya University Rajkot

Atmiya University

Faculty of Engineering and Technology

Department of Mechanical Engineering

Course: Economics & Business Management

Asssignment-1 (Important Questions)

Unit-1 Economics

1. What do you mean by Economics? Elaborate difference between micro and macro economics
2. Explain in detail difference between demand and supply
3. Explain in details determinants of demand.
4. Explain in details determinants of supply.
5. What is the law of demand? Explain in brief.
6. What is the law of supply? Explain in brief.
7. Explain in brief price elasticity, income elasticity and cross elasticity of demand.

Unit-3 Management

1. Explain concept of management with respect to various activities and processes
2. Describe characteristics of management.
3. What are the objectives of management to accomplish desired goals?
4. Describe different types of skills of management.
5. Explain in brief levels of management
6. Explain the scope of management for the improvement.
7. What are the roles of manager?
8. Explain types of managers.
9. Describe Maslow's hierarchy of needs theory
10. Describe the principles of scientific management
11. Describe the administrative principles of management

Atmiya University Rajkot

Atmiya University

Faculty of Engineering and Technology

Department of Mechanical Engineering

Course: Economics & Business Management

Assignment-II (Important Questions)

Unit-2: Production

1. What do you mean by theory of production?
2. Explain with suitable example factors of production?
3. Explain short run and long run production functions.
4. Explain law of variable proportions & law of returns to scale cost.
5. Define: 1) Fixed Cost 2) Variable Cost 3) Total Cost 4) Average Cost 5) Marginal Cost 6) opportunity Cost.
6. Explain with figure Break Even Analysis in detail.
7. A pencil manufacturing company sells a pencil box consisting 10 pencils at a 75 rupees at a premium price. The variable cost associated with producing one pencil is 0.5 Rs. The fixed costs of company is Rs. 500000/-. Calculate Breakeven point of the pencil.

Unit-4: Functions of Management

1. Describe major functions of management.
2. What is planning? Explain features of planning.
3. What is organizing? Explain features of organizing.
4. What is staffing? Explain features of staffing.
5. What is directing? Explain features of directing.
6. What is controlling? Explain features of controlling.
7. Give classification of organization types.
8. What is the difference between formal and informal organization?
9. Explain the functions of line organization and line and staff organization.
10. Explain matrix and hybrid organization.
11. What is departmentalization? Explain types of departmentalization

Unit-5: Types of Management

1. Define marketing and discuss marketing mix in terms of 4Ps
2. What do you mean by demand forecasting? Explain in brief consumer survey method for demand forecasting.
3. What is market segmentation? Explain types of market segmentation.
4. Explain in brief functions of financial manager.
5. Explain different Sources of Funds
6. What is production management? Explain objectives of production management.
7. Explain features of various plant layout
8. Explain in detail factors affecting the plant location
9. What is human resource management? Explain objectives of manpower planning.

Atmiya University Rajkot

UNIT – 1
Web Foundation using HTML

Introduction to HTML

What is HTML?

HTML is not a programming language. Technically it is known as a "markup" language. The language used to develop web pages is called Hypertext Markup Language (HTML). HTML is the language interpreted by a Browser. Web Pages are also called HTML documents.

HTML (Hypertext Markup Language) is the standard language used to create and structure content on the web. It provides the basic building blocks for web pages, defining the structure, layout, and elements of the content.

HTML contains a collection of case-insensitive tags that starts and ends with angular brackets (<>). You can create hypertext documents using any text editor such as Notepad, FrontPage, Dream weaver and the documents are saved with the extension, .html or .htm.

What is Web Page & Web Site

Web Page:

A web page is a document or resource on the World Wide Web that is typically written in HTML (Hypertext Markup Language) and can be viewed using a web browser. Web pages can include text, images, videos, links, and other multimedia content. They are usually part of a larger website, which consists of multiple web pages linked together.

Web pages are essential components of the internet, allowing users to access and interact with information and services online.

Web Site:

A website is a collection of interconnected web pages that share a common domain name and are hosted on a web server. Websites are accessed through a web browser by entering their URL (Uniform Resource Locator). They can range from simple personal blogs to complex platforms like social networks, e-commerce sites, or government portals.

Atmiya University Rajkot

Key Components of a Website:

1. **Domain Name:** The address of the website (e.g., www.example.com).
2. **Web Pages:** Individual documents or resources that make up the content of the website.
3. **Home Page:** The main page of a website, often serving as the starting point for navigation.
4. **Navigation:** Menus or links that help users move between different pages of the site.
5. **Web Server:** The server where the website's files are stored and served to users.
6. **Backend:** The server-side logic, databases, and applications that power the website's functionality.
7. **Frontend:** The user interface and design elements that users interact with.

Key Features of HTML:

1. **Tags:**
   HTML tags are usually English words or abbreviation. But they are different from the regular text because they are placed in small angle brackets. HTML tags are used to mark-up HTML elements. HTML tags are surrounded by the two characters < and >. The surrounding characters are called angle brackets.

   HTML tags normally come in pairs like and . The first tag in a pair is the start tag, the second tag is the end tag. The text between the start and end tags is the element content. HTML tags are not case sensitive; means the same as <B>.

2. **Elements:**
   An HTML element consists of an opening tag, content, and a closing tag. The element is the entire structure, including both the tags and the content between them. For example, This is a paragraph defines a paragraph element.

3. **Attributes:**
   Tags can have attributes, which provide additional information about an element. Attributes are placed inside the opening tag, typically in the form of name-value pairs, like color="colorName".

There are two types of tags in HTML:

- Singular Tag
- Paired Tag

➢ **Singular Tag:**
It is also called a standalone tag. A stand-alone tag does not have its companion tag. For e.g., <HR>,

Atmiya University Rajkot

- **Paired Tag:**

  The tag is said to be paired if it is along with its companion tag. In paired tag the first tag is called opening tag and the companion tag is called closing tag.

  Here's a quick review of HTML tags:

The closing tag always comes after the content of the tag - it's how the browser knows that you want the tag to end.

The contents of an HTML tag are the stuff that goes between the opening and closing tags - this is what we mean when we say "inside" a tag. The contents of a tag can be normal text or a mix of other tags.

For e.g.: <B>ATMIYA University</B>

Basic HTML Document Structure

The first tag of an HTML document is always <HTML> and the last tag is always </HTML>.

There are two main parts of every HTML document.

- Document Head
- Document Body

- **Example:**

```
<HTML>
        <HEAD>
                <TITLE>Document Title</TITLE>
        </HEAD>
        <BODY>
                - - - - - - - - - - - - - - - - -
                Document Contents
                - - - - - - - - - - - - - - - - -
        </BODY>
</HTML>
```

The <html> element is the root element of an HTML page

The <head> element contains meta information about the HTML page

The <title> element specifies a title for the HTML page (which is shown in the browser's title bar or in the page's tab)

The <body> element defines the document's body, and is a container for all the visible contents, such as headings, paragraphs, images, hyperlinks, tables, lists, etc.

Atmiya University Rajkot

Head Section:

Title: The information placed in this section is essential for inner processing. Within the document head there is one required header tag - the <TITLE>, </TITLE> field. This title is typically shown in the title bar of the browser window. Document titles should convey something useful about the content of the document.

Link: The <link> element in HTML is used to define a relationship between the current document and an external resource. It is most commonly used to link to external stylesheets.

Style: The <style> element in HTML is used to define internal CSS (Cascading Style Sheets) directly within an HTML document. It allows you to embed CSS rules that style elements on the page. These styles can control the layout, colors, fonts, spacing, and other visual aspects of the HTML content.

Body Section:

<Body> …. </Body> is used to define document body. The body section contains the content of the document such as the actual text to display. Whatever content you want to display on web page are placed between <Body> …. </Body> Within the document body you can place all tags that related to text, images, tables, lists are placed in this section. <Body> has various attributes.

Basic HTML Elements & Formatting Tag

1. <b> Tag *or* <STRONG> Tag

The <b> or tag displays a boldface type.
It is a paired tag. <Strong> is the alternative of <b> tag.
Example:

```
<b> Web Scripting Language </b>
<strong> Web Scripting Language </strong>
```

2. <i> Tag *or* <Em> tag

The <i> or <Em> tag displays text in italic.
It is a paired tag. <Em> is the alternative of <i> tag.
Example:

```
<i> Web Scripting Language </i>
<EM> Web Scripting Language </EM>
```

3. The <U> *or* <Ins> Tag

It is used to display a text with underline.
It is a paired tag. <Ins> is the alternative of <U> tag.
Example:

```
<U>Web Scripting Language</U>
```

Atmiya University Rajkot

4. <BIG> Tag

The <BIG> tag increases the font size from its current value by 1.
It has the same effect as using the FONT tag with a SIZE value of +1.

Example:

```
<BIG> Hello </BIG>
```

5. <SMALL> Tag

The <SAMLL> tag reduces the font size from its current value by 1.
It has the same effect as using the FONT tag with a SIZE value of -1.

Example:

```
<SMALL>……. </SMALL>
```

6. The <SUP> Tag

It is used to display a text as superscript.
It is a paired tag.
Superscript implies that the text is displayed in a text size smaller than the normal size and is positioned slightly above the normal body text.

Example:

```
x<sup>3</sup>
```

7. The <SUB> Tag

It is used to display a text as subscript
It is a paired tag.

Example:

```
H<SUB>2</SUB>O
```

8. The <BLOCKQUOTE> Tag

A browser inserts white space before and after a block quote element. It also inserts margins for the block quote element.
This tag is used to set left and right indents for the margin of text.
It is used for displaying a text as quoted text.
It is a paired tag.

Example:

```
<blockquote>
        Web page contents.
</blockquote>
```

9. The <CENTER> Tag

It is used to set center alignment of any content enclosed between as per screen width.
Content may be text, image, table, list, form etc….
It is a paired tag.

Example:

```
<CENTER>Web Scripting Language</CENTER>
```

Atmiya University Rajkot

10. <STRIKE> *or* <s> *or* <Del> tag

It is used to display a text with a strikethrough character.
It is a paired tag. <S> and <del> are the alternatives of <Strike> tag.

Example:

```
<S>Web Scripting Language</S>
<del>Web Scripting Language</del>
```

**11. The
 Tag**

The
 Tag inserts a single line break.
The <BR> tag has no end tag.
When text needs to start from a new line and not continue on the same line, then <BR> tag should be used.

 tag does not skip one blank line between previous line and new line.
It does not have any attributes.

Example:

```
<BODY>
        Yogidham Gurukul
        <BR>
        ATMIYA University
        <BR>
        Rajkot-360 005.
</BODY>
```

12. <Mark> element

The HTML <mark> tag is used for indicating text as marked or highlighted for reference purposes. Highlighting text on a web page can help bring important information immediately to the reader's attention. The <mark> element is used to highlight text inside of another element such as a paragraph, list, or table.

Example:

```
<mark>marking effect with yellow color</mark>
```

13. <abbr> element

Abbr means Abbreviation. The <abbr> element is used along with a title attribute to associate a full-text explanation with acronym. This element give useful information to browsers, translation systems and search-engines, while user move the cursor upon the particular text or object.

Example:

```
<abbr title="Atmiya University">AU</abbr>
```

14. <DIV> tag

Defines a division or a section in an HTML document. It is often used to group block-elements to format them with styles.

Atmiya University Rajkot

Example:

```
<body>
        <div>
                <h1> ATMIYA University </h1>
                <p> This is a paragraph. </p>
        </div>
</body>
```

15. The Comment Tag:

This <!-- -- > tag is used to give a comment to your web page. This is a paired tag. The comment is used to insert a comment in the source code. A comment will be ignored by the browser. You can use comments to explain your code, which can help you when you edit the source code later. You can also store program-specific information inside comments. In this case they will not be visible for the user, but they are still available to the program. A good practice is to comment the text inside the script and style elements to prevent older browsers, that do not support scripting or styles, from showing it as plain text.

Example:

```
<!-- This text is a comment -- >
```

16. Body Tag:

The <BODY> tag contains the content of the HTML document. The <BODY> tag is defined after the <HEAD> tag in an HTML document.

The attributes of the <BODY> tag enables you to use special features for the body content of an HTML document.

The various attributes of the <BODY> tag is:

- **Bgcolor**

  It can be used to change the background color of a web page. By default the background color is white. You can set the value for Bgcolor using constant character or using hexadecimal code.

  Example:

  ```
  <Body Bgcolor="red">
  ```

- **Background**

  The background is used to define the background properties for the entire web page. It can be used to set an image in the background of an HTML document.

  Path can be set for background using any one of the following ways…

  - **Absolute or Physical Path**
  - **Relative Path**
    - **Absolute (Physical) Path or Full Path:**

      You must specify the full path from the root directory to the image file.

      Example: <Body background="c:\images\Atmiya.jpg">

Atmiya University Rajkot

- **Relative Path:**
  Whenever the image file exists in current working directory at that time you do not need to specify full path. You can directly give the image file because by default Browser searches for file only within current working directory.
  Example: <Body background="Atmiya. jpg">

❖ **Text**
Enables you to specify the color of the text in hexadecimal code in an HTML document. By default, the text color is black.
Example: <Body text="red">

❖ **Link**
Enables you to set the default color of the links in hexadecimal code and the color name in an HTML document.

❖ **Alink**
Here, Alink can be used to change the default color of a Hyperlink which is activated to whatever color is specified with this tag. The user can specify the color name or an equivalent hexadecimal number.

❖ **Vlink**
Here, Vlink can be used to change the default color of a hyperlink which is really visited to whatever color is specified with this tag. The user can specify the color name or an equivalent hexa number.

17. The Standard Headings

Heading tags are used to define headings of contents in a document. The Line tags are used to implement styles on a particular line of text. They separate one block of text from another.

The standard heading tags, <H1>, <H2>, <H3>, <H4>, <H5>, <H6> are used to display headings. The <H1> tag is used to display the most dominant heading whereas <H6> tag is used to display the least dominant heading. The headings are displayed from a new line in an emphasizing font style in contrast to the rest of the body content. All the style appears in Boldface and size of heading depending on level chosen.

These all are the paired tag, so you must have to write both tag start tag and end tag.

Attribute of Heading Tags:

❖ **Align:**
This attribute is used to set alignment of headings. It has following four values.
Left – It align the heading in left hand side of the screen.
Right – It align the heading in Right hand side of the screen.
Center – It align the heading in Center of screen.
Justify – It align the heading in left hand side as well as right hand side of the screen.
Example: <H1 align="LEFT"|"RIGHT"|"CENTER">.... </H1>

Atmiya University Rajkot

18. The <P> Tag

The <P> tag is used to start a paragraph from a new line. It is a paired tag. This tag is also used to insert a line break with an additional space. The ending </P> tag ensures that after the end of a paragraph some space is left blank.

Example:

```
<P align="LEFT"|"RIGHT"|"CENTER">Text</P>
```

❖ **Align**

In <P> element align attribute specifies that the paragraph is aligned horizontally. The values assigned to the align attribute are:

- LEFT: Displays a left aligned paragraph.
- RIGHT: Displays a right aligned paragraph.
- CENTER: Displays a centrally aligned paragraph. This is the default value for the align attribute.

Example:

```
<HTML>
        <HEAD>
                <TITLE>Document Title</TITLE>
        </HEAD>
        <BODY>
                <p>
                        - - - - - - - - - - - - - - - - - -
                        Document's Paragraph
                        - - - - - - - - - - - - - - - - - -
                </p>
        </BODY>
</HTML>
```

19. The <FONT> Tag

The <FONT> tag enables you to configure the various properties of the text to be displayed on a Web page such as style, size and color.

You can configure these properties using the following attributes:

Attributes:

❖ **SIZE**: Enables you to set the size of the text. You can specify the value of the SIZE attribute as an integer between 1 and 7. The default size of the font is +3.

❖ **COLOR:** Enables you to set the color of the text. You need to specify the hexadecimal value of the COLOR attribute to configure the color of the text. The default value of the COLOR attribute is black.

❖ **FACE:** Enables you to set the font style of the text. The default value of the FACE attribute is Times New Roman.

Example:

```
<FONT SIZE=7 COLOR=Blue FACE=arial>ATMIYA University</FONT>
```

Atmiya University Rajkot

20. The <HR> Tag

This tag is used to put a Horizontal line on the page. It is used to separate various sections of the document. The <HR> tag does not contain an ending tag.

Example:

```
<HR align="LEFT" width="50%" size="8" color="red">
```

Various attributes of the <HR> tag are:

- **Color:** Specifies the color of the line with color name or 6 digits hexadecimal color code with "#" sign.
- **Size:** Specifies the thickness of a line in pixels. The default value is 2 pixels.
- **Width:** Specifies the horizontal width of a line. The default value for this attribute is the width of the Web browser window. The value for the attribute can be specified in either pixels or as a percentage of the width of the Web browser window.
- **Align:** Sets the horizontal alignment of a line. Three values can be assigned to this attribute, which are:
  - **CENTER:** Displays a center-aligned line. This is the default value for the align attribute.
  - **LEFT**: Displays a left-aligned line.
  - **RIGHT**: Displays a right-aligned line.

21. CREATING LIST

A list represents a series of words one after another.

Lists are used when the data are to be mentioned in form list of items.

There are two types of list,

1. Ordered list
2. Unordered list

1. ORDERED LIST <OL>

An ordered list can be represented by <OL> tag. List having the numbered items are known as ordered list. These lists have list items that have a natural number. The <LI> tag is nested inside the <OL> tag to represent every single element of an ordered list. <LI>…</LI> must be placed between <OL>…</OL>.

It has two attributes.

```
<OL     Type=1,a,A,i,I Start=value >
...
</OL>
```

Type attribute is used to set numbering format. The values may be one of the following:

a : Displays a series of lowercase letters.

A: Displays a series of uppercase letters.

i: Displays a series of lowercase Roman numerals.

I: Displays a series of uppercase Roman numerals.

1: Displays a series of numbers.

Anil University Rajkot

Start attribute is used to set the starting position of the sequence. The values of this attribute are type of numeric.

2. **UNORDERED LIST <UL>**
   These lists are also called bulleted list. These lists have list of items that do not have a number. This list is start with <UL> and end with </UL> tag. The <LI> tags are nested inside the <LI> tags to represent every single element of an unordered list.
   <LI>…</LI> must be placed between <UL>…</UL> tag. It has one attribute.
   <UL Type="Circle"|"Square"|"Disc"> … </UL>
   The Type attributes is used to set type of Bullets. The values are:
   Circle – Represents a circular non-colored bullet.
   Disc – Represents a solid bullet.
   Square – Represents a square bullet.

22. <MARQUEE> Tag

The marquee element creates with scrolling text, similar to a live ticker tape from a stock brokerage firm. HTML provides the special feature which enables us to display scrolling and animated text in the web. If you want your text to move within the screen, use this tag. It has so many attributes; we are going to see them one by one. It is a paired tag.

Example:

```
<MARQUEE
        align="center" || "left" || "right"
        behavior="scroll" || "slide" || "alternate"
        bgcolor="color"
        direction="left" || "right"||"top"||"Bottom"
        height="height"
        width="width"
        HSpace = ""
        Vspace =""
        Loop=2 >
            - - - - ATMIYA University - - - -
</MARQUEE>
```

Various attributes of the <Marquee> tag are:

- **ALIGN:**
  For vertical alignment of the marquee text.
- **Behavior:**
  It determines how marquee behaves scrolling text like a ticker tape, flying text in or having it move from side to side.
- **Bgcolor:**
  To set the background color of the marquee.

Atmiya University Rajkot

- **Direction:**
  To set the direction left, right, up or down used with direction attribute.

- **Height & width:**
  To set the vertical & horizontal size of the marquee.

- **Hspace, Vspace :**
  It sets the horizontal space around the marquee and vertical space around the marquee.

- **Loop:**
  Loop sets how many times the marquee should scroll. The default is INFINITE, which means loops endlessly. Also, one of the problems with loop is that content disappears after the last loop. To overcome this problem, use Behavior=Slide.

23. <img> Tag

The <img> tag specifies an image to be displayed in an HTML document. An image can be a plain image that simply appears on the page. The <img> tag does not require a closing tag.

Example:

```
<img
        Src      =      "Path location"
        Height =        "tall"
        Width =         "wide"
        Alt      =      "alternative Text"
        Align    =      "alignment"
        Border =        "border width"
        Hspace=         "horizmargin"
        Vspace=         "Vertimargin"
>
```

Various attributes of the <IMG> tag are:

- **SRC**
  The src attribute is required for image location.
  It specifies the URL of the image to be displayed in the document.

- **Alt**
  Specifies text to be displayed if the browser does not support the <img> tag or if the use has superior image loading browser.

- **Align**
  Left align is used to set image with the left margin.
  Right align is used to set image with the right margin.

Vidhya University Rajkot

- **Border**
  Specifies the width in pixels of a border around the image.
  The value must be an integer and pixel.

- **Height**
  Specifies the height of the image either in pixels or as a percentage of the height of the window block HTML that contains the image.
  It's indicated a few pixels; specify the value as an integer.

- **Width**
  Specifies the weight of the image either in pixels or as a percentage of the weight of the window block HTML that contains the image.
  It's indicated a number of pixels; specify the value as an integer.

- **Hspace**
  Specifies the margins in pixels between the surrounding text and the right and left edges of an images.

- **Vspace**
  Specifies the margins in pixels between the surrounding text and the top and bottom edges of an images.
  Example:

```
<img src="Atmiya.gif" alt="Atmiya University" width="32" height="32">
```

24. Creating a Table

Table Tag

Tables allow you to arrange items in a Grid pattern. It provides an organized and systematic display of data. So table is combination of Rows and Columns. Any table is made up of header, row, column and cells. Here <TABLE> tag is used to create a table.

Syntax:

```
<TABLE
  Align="Left|Right|Center"
  Height="height" Width="width"
  Border="value" bordercolor="colorName"
  Cellpadding="value"   Cellspacing="value"
  Bgcolor="color"
  Hspace="horizmargin" Vspace="vertmargin"
>
...
</TABLE>
```

Atmiya University Rajkot

Various attributes of the <Table> tag is:

- **Align:** Specifies the Horizontal alignment of a table. The values are Left|Center|Right.
- **Height:** Specifies the height of a table. The value for the height attribute can be specified either in terms of number of pixels or as a percentage of the height of the web browser window.
- **Width:** Specifies the width of a table. The value for the width attribute can be specified either in terms of number of pixels or as a percentage of the width of the web browser window.
- **Border:** Specifies the thickness of a table border in pixels. By default, tables are displayed without borders. So its default value is 0.
- **Bordercolor:** Specifies the color of a table border in color name or a hexadecimal color code.
- **Cellpadding:** Specifies the space between the border and the content of the cell in pixels. The default value for this attribute is 1. Any text in the cells does not appear to be sticking to the border.
- **CellSpacing:** Specifies the space between the cells of a table in pixels or percentage. The default value for this attribute is 2.
- **Bgcolor:** Specifies the background color of a table. It can be specified either using color names, or using rrggbb hexa triplet. Default value is “white”. It can be used with all table tags.
- **Background:** Specifies the background picture of a table. We can specify an image to set background of HMTL page or table.

<CAPTION> Tag

The <caption> tag is used to define the caption(title) of a table. The <caption> tag is used inside the <TABLE> tag and before the starting of first <TR>.

Example:

```
<caption> A T M I Y A    U n i v e r s i t y </caption>
```

<TR> tag

The <TR> tag defines rows for a table. The <TR> tag is used inside the <TABLE> tag. Any special formatting like boldface or italics is done including appropriate formatting tags inside <tr>…</tr>

Example:

```
<TR
        Bgcolor=”color”
        Align=”left, right, center”
        Valign=”top, bottom, middle”>
        …
</TR>
```

- **Bgcolor:** The Bgcolor attribute sets the color of the background for the row.

Atmiya University Rajkot

- **Align:** The align attribute specifies the horizontal alignment of the table. The values that can be assigned to the align attribute are:

  Left: Creates a left aligned table. This is the default value.

  Right: Creates a right aligned table.

  Center: Creates a centrally aligned table.

- **Valign:** The Valign attribute specifies the vertical alignment of the text within a cell. The values that can be assigned to the valign attribute are:

  Bottom: Displays the text at the bottom of the cell.

  Middle: Displays the text at the center of the cell. This is the default value for the valign attribute.

  Top: Displays the text at the top of the cell.

<TD> tag

The <TD> is used to specify the text in a cell of a table. The <TD> tag is used inside the <TR> tag. The text in a TH element is BOLD and CENTERED. The text in a TD element is REGULAR and LEFT-ALIGNED.

Example:

```
<TD
    Align="Center|Left|Right"
    Valign="Bottom|Middle|Top"
    Bgcolor="color"
    Colspan="value"
    Rowspan="value"
    Width="pixelwidth"
    Height="pixelheight"
    Nowrap
    >
    …
</TD>
```

Attributes:

- **Colspan:** this attribute is used to merge more than columns cell into single cell for a single row. This attribute is useful when one row of the table needs to be certain number of columns wide. It is used with <TD> and <TR> tag. This attribute can be set by giving a numeric value.
- **Rowspan:** this attribute is used to merge more than rows cell into single cell for a single column. This attribute is used when one column of the table needs to be certain number of row wide. It is used with <TD> and <TR> tag. This attribute can be set by giving a numeric value.

Atmiya University Rajkot

<TH> tag

The headings for a table are specified by the <TH> tag. The content of a table header row is automatically centered and appears in boldface. It is a paired tag.

Syntax:

```
<TH
  Align="Center|Left|Right"
  Valign="Bottom|Middle|Top"
  Bgcolor="color"
  Colspan="value"
  Rowspan="value"
  Width="pixelwidth"
  Height="pixelheight"
>
…

        </TH>
```

Colgroup and Col tags

Colgroup: The <colgroup> tag specifies a group of one or more columns in a table for formatting. It is useful for applying styles to entire columns, instead of repeating the styles for each cell, for each row.

The <colgroup> tag must be a child of a <table> element, after any <caption> elements and before <tr> elements.

To define different properties to a column within a <colgroup>, use the <col> tag within the <colgroup> tag.

Col: The <col> tag specifies column properties for each column within a <colgroup> element.

The <col> tag is useful for applying styles to entire columns, instead of repeating the styles for each cell, for each row.

Attributes:

- **Span:** Specifies the number of columns a <col> element should span
- **BgColor:** It's specify the background color of particular column.

25. Hyperlinks and Navigation (Creating link with <A> Anchor Tag)

A link is the "address" to a document (or a resource) on a web. Hyperlinks can point to any resource on the web: an HTML page, an Image, a sound file, a movie etc., A link in HTML documents can be basically considered as a reference to other resource. This reference establishes an implicit relationship between the document and the resource linked.

Atmiya University Rajkot

❖ **There are three different kinds of links:**

1) **Internal Link:** Links to anchors on the current page.
   (href="#anchorname")
2) **External or Local:** Links to other pages within your domain.
   (href="D:/image/filename.jpg")
3) **Global Link:** Links to other domains outside of your site.
   (href="http://www.google.com")

How to make a LINK?

The tag used to produce links are the <A>…</A>. Everything between these two tag will work as a link. You can navigate between different HTML documents by clicking the hyperlinks. A hypertext link is a piece of content that the user can click to invoke an action. The most common actions are scrolling to a different place in the current document and opening a new document. A hypertext link can contain text and graphics. The value of the HREF attribute must be a URL. When the user clicks any content between <A HREF> and </A> tags, the link is activated.

Example:

```
<a HREF="location"> ....  </a>
```

❖ **Attributes of Anchor tag are:**

- **HREF="Path Name** *or* **Location"**
  Specifies a destination URL for the link. The most common value here is a document name or an anchor. To specify a document to open, provide the URL for the document, either as an absolute or relative URL.

  An example of an absolute URL:
  HREF="http://atmiyauniversity.edu/index.html"

  An example of a relative URL:
  HREF="d:/Atmiya/xyz.html"

  Example:

```
<a href="PathName">Text</a>
```

Using Image as Hyperlink

- Images can also work as Hyperlinks.
- You need to include the <IMG> tag inside the opening and closing part of the anchor tag.
- **Example:**

```
<A href="index.htm">
        <IMG src="atmiya.jpg">
</A>
```

Atmiya University Rajkot

Linking to Internal Page (Creating a BOOKMARK)

- The anchor also enables you to navigate within the current HTML document known as Bookmark. A Href attribute of the <A> tag is used to create bookmark.
- The syntax is:

  <A href="#anchor-name">…</A>
- In above syntax, the # symbol specifies that the path given, represents a link within the same document. The anchor-name represents the id of the destination anchor tag.
- For e.g., you need to create a web page, bookmark.htm, which contains bookmarks.

- The coding of the Bookmarking is:

```
<body>
        <a href=#bookmark1>CLICK HERE TO SCROLL DOWN TO
        BOOKMARK1</a>
        <P>
            Paragraph text Paragraph text Paragraph
            text Paragraph text Paragraph text
            Paragraph text Paragraph text Paragraph
            text Paragraph text Paragraph text
            Paragraph text Paragraph text Paragraph
            text Paragraph text Paragraph text
            Paragraph text Paragraph text Paragraph
            text Paragraph text Paragraph text
            Paragraph text Paragraph text Paragraph
            text Paragraph text Paragraph text
            Paragraph text Paragraph text Paragraph
            text Paragraph text Paragraph text
        </P>
      <a id=bookmark1>BOOKMARK1</a>
</body>
```

26. Multimedia Elements

Multimedia comes in many different formats. It can be almost Images, music, sound, videos, records, films, animations, and many more, which u can see or listen to. Web pages contain many types of multimedia content like audio or video. These types of elements are stored in media files.

Atmiya University Rajkot

HTML Plug-in

HTML Plug-in allows extra functionality to the web browser. HTML Plug-ins are computer programs which extend more functionality of a web browser. Plug-ins can be used for many purposes: display maps, scan for viruses, verify your bank id, etc.
Plug-ins can be added to web pages with the <object> tag or the <embed> tag.

<Embed>

The <embed> element can be used to embed external application, typically multimedia content like audio, video or documents (like PDFs), directly into a webpage. It's a self-closing tag and can be used to insert any type of content that a browser or plugin can render.

Example:

```
<embed src="c:\Atmiya\Xyz.pdf" width=500 height=350>
```

HTML Audio

The <audio> element is used to embed audio content in an HTML document without requiring any additional plug-in like Flash player.

Example:

```
<audio controls>
        <source src="Atmiya.mp3">
</audio>
```

Attributes:

- **SRC:**
  Specifies the location of the audio file. Alternatively, you can use the preferred <source> tag as it allows for multiple options.

- **Controls:**
  If specified, the browsers will display controls to allow the user to control audio playback, such as play/pause, volume, etc.

- **Loop:**
  This Boolean attribute specifies that the audio will automatically start over again, upon reaching the end.

- **Muted:**
  This Boolean attribute specifies whether the audio will be initially silenced. The default value is false, meaning that the audio will be played.

Video Elements

The <video> tag is used to embed video content in a document, such as a movie clip or other video streams.
The <video> tag contains one or more <source> tags with different video sources. The browser will choose the first source it supports.

Atmiya University Rajkot

Attributes:

- **SRC:**
  This attribute is used to specify the location of the video file. The sub tag <source> is preferred to allow the multiple file option.

- **Height:**
  This attribute is used to specify the displayed height area of the video.

- **Width:**
  This attribute is used to specify the displayed width area of the video.

- **Controls:**
  This attribute is used to display the video controls and allow to the user to use it like play, pause, stop, volume etc.

- **Loop:**
  This attribute is used to specify that the specified video will play automatically again and again.

- **Muted:**
  This attribute is specifying that the video played with sound or silenced. The default value of this attribute is false.

- **Poster:**
  This attribute is specifying an image to be shown into the video screen until the user hits the play button. If the poster attribute is not specified, the first frame of the video is displayed as the poster.

27. Forms and It's different Controller

What is Form?

The <form> is a block-level element that's defines an interactive part of a webpage. HTML Forms are required, when we need to collect some data from the site visitor. For example, if you need to collection of information data during user registration such as name, email address, credit card, etc., at that time form is required.

A form will take input from the site visitor and then will post it to a back-end application such as CGI, ASP Script or PHP script etc.

There is various form elements are available like Textbox, Multiline textbox, pull-down menu, checkbox, radio button, buttons et.

<FORM> Element:

The <form> tag creates an HTML form. The form can contain interface elements such as text fields, buttons, checkboxes, radio button, and selection lists that let users enter text and make choices.

All elements in the form must be defined between the <form> and </form> tags.

Atmiya University Rajkot

Example:

```
<form
        Action="url"
        Method="methodname"
        Name="formname">
        ……
</form>
```

Attributes:

Action:

Action attribute is required to specify the URL address, where to store or submit the data information of concerned forms.

Method:

Method attribute is specified that how to information is sent to the specified URL address.

- **GET** (the default) appends the input information to the URL which on most receiving systems becomes the value of environment variable QUERY_STRING.
- **POST** value specifies types of method which sends the sensitive information like password to particular URL address. Value with POST request is not remember the data information in browser history.

Name

Specifies the name of the form. The name is not displayed on the form. Scripting language can use the Name attribute to different forms if there are multiple forms on a page.

<INPUT> Element:

With the use of Input element form will receive the information data which are given by the user's input. The TYPE attribute determines to specific sort of form element to be created. The <input> element displays form element in several ways, depending on values of the **type** attribute.

TYPE Attribute

A Type attribute determines the various types of form controls.

1. **Text**

   A value "text" is used to define a one-line text input field into HTML form. "Text" is a default value of type attribute.

   Ex.:

   Name : <input type="text" value="Atmiya University">

   Name: Atmiya University

Atmiya University Rajkot

2. **Password**

   A value “password” is used to define hidden (unreadable) text field into HTML form of web page. The characters in a password field are not readable and shown as asterisks or circles symbol.

   Ex.:

   Password: <input type= “password”>

   Password: ••••••

3. **Radio**

   A value “radio” defines a **radio button. Which let a user to select only one option from limited options of choice.**

❖ **Checked Attribute:**

A checked attribute is used to set the control checked by default in HTML form. It’s used with **checkbox** or **radio** button only.

Ex.:

Gender:<input type=“radio” checked>Male <input type=“radio”>Female

Output:

Gender: ◉ Male ○ Female

4. **Checkbox**

   - A value “checkbox” defines a checkbox in form. Checkboxes let a user to select zero or more options of a limited number of choices.

   Ex.:

   Hobbies: <input type=”checkbox” checked>Reading

   <input type=”checkbox”> Music

   <input type=”checkbox”> Chess

   Output:

   Hobbies : ☑ Reading ☐ Music ☐ Chess

5. **File**

   A value “file” is used to define a file-select field with a "Browse" button for file uploads.

   Ex.:

   Upload your file here: <input type=”file”>

   Output:

   Upload your file here: Choose File No file chosen

Atmiya University Rajkot

❖ **Multiple Attribute:**
This attribute is a Boolean attribute. It defines that the user is allowed to select more than one file. This attribute works with file input type. To select multiple files, hold down the CTRL or SHIFT key while selecting.

6. **Submit**
A value "submit" with type attribute defines a button for submitting form's data to a form-handler data file.
Ex.: <input type="submit">

Submit

7. **Reset**
A value reset defines a button named with Reset, which will reset all the information as default form's value.
Ex.: <input type="reset">

Reset

8. **Button**
A value "button" is used to define a button in HTML form.
Ex.: <input type="button" value=" Ok "></input>

Ok

9. **Color**
A color value is used to provide a color picker interface element in web page. If you don't specify a value, the default is #000000, which is black.
Ex.: Select Color: <input type=color>
Output:
Select Color:

10. **Date**
A date value is used to define a date picker interface. The resulting value includes the year, month, and day.
Ex.: Enter Date: <input type=date>
Output:
Enter Date: dd-mm-yyyy

11. **Time**
This Value allows the user to select a time from time controller from web page.
Ex.: Enter Time: <input type=time>
Output:
Enter Time: --:--

Atmiya University Rajkot

12. Number

A value number provides a numeric input field in web page.

Ex.: <input type=number>

Output:

❖ **Step Attribute:**

Value of "step" specifies the legal number intervals in controller.

Min and **Max** attributes are specified in restricted attribute ahead.

13. Range

A value range defines a control for entering a number using a slider control. Default range is 0 to 100.

Ex.: 0 <input type=range> 100

Output:

❖ **Name Attribute**

The name attribute specifies the name of the input element. The name attribute is used to give a name to the control which is sent to the server to be recognized and get the value. The name is not displayed on the form.

Min and **Max** attributes are specified in restricted attribute ahead.

Other attributes of Input element:

❖ **Size Attribute**

Specifies the length of the input length field, in characters. The value should be an integer. This is also used with text or password type filed.

❖ **Value Attribute**

A Value attribute is used to provide an initial value inside the control in HTML form.

❖ **Placeholder Attribute**

This attribute defines a short hint that describes the expected value of an input field from user. The short hint is displayed in the input field before the user enters a value. The placeholder attribute works with a value like text, email, password and textarea element etc.

❖ **List Attribute**

List attribute is used to connect with <datalist> contain different option. A datalist is used to pre-defined options (connected to an <input> element) for user.

Atmiya University Rajkot

Ex.:

```
Subject: <input list="Atmiya">
<datalist id="Atmiya">
        <option value="HTML">
        <option value="CSS">
        <option value="JavaScript">
</datalist>
```

Output:

Restricted Attributes in Input element:

- **Maxlength Attribute**
  This attribute is used to specify the maximum number of characters a text box can accept. This is used with text box or password box controller.

- **Required Attribute**
  Required attribute specifies that an input field must be filled out before submitting the form's data. It works with input types like text, password, email, date, time, number, checkbox, radio and file.

- **Min Attribute**
  It is used with number and range type. The min attribute determines the minimum value into input field.

- **Max Attribute**
  It is used with number and range type. The max attribute determines the maximum value into input field.

- **Readonly Attribute**
  The read only field cannot be modified by the user. Users can select, highlight and copy its data. The read-only attribute specifies that the input field cannot be changed. Users can read only. It works with Input and textarea element.

- **Disabled Attribute**
  The disabled attribute specifies that the input field is disabled. A disabled field is unusable and un-clickable, and its value will not be sent when submitting the form.

Atmiya University Rajkot

<Button> Element:

The <button> tag is used to create clickable buttons on the web page. The difference between these elements and buttons created with the <input> tag is that you can place the content (images or text) inside the <button>.

The <button> tag comes in pairs, the content is written between the opening and the closing tags. When <button> element is used in the form, it works as the submit button. You can also use it as a reset button. While using it outside the form, you can call JavaScript function on it.

Ex.:
```
<button>Ok</button>
<button><img src="Atmiya.jpg"></button>
```

<TEXTAREA> Element:

The <TEXTAREA> is paired tag element. It defines a multiline input field on an HTML form. A text area field lets the user enter words, phrases or numbers.

- **Syntax:**

```
<TEXTAREA
        Cols="columns"
        Rows="rows"
        Name="name">
        ……
</TEXTAREA>
```

Attributes:

- **Cols**
  Defines the width the text area can accommodate without scrolling.

- **Rows**
  Defines the number of line text area can accommodate without scrolling.

- **Name**
  This attribute specifies the name of the text area element.

<SELECT> Element:

The <select> element is applied to create a pull down (drop-down list) menu. The <SELECT> tag defines a selection list on an HTML form. The <SELECT> tag should be used between <FORM> tags. The <option> tags inside the <select> element define the available options in the list.

Example:

```
<SELECT Name="selectName" Size="listlength">
……
</SELECT>
```

Atmiya University Rajkot

Attributes:

- **Name**
  This attribute specifies the name of the select element.

- **Size**
  This one specifies the number of option visible when the form is displayed.

- **Multiple**
  With the use of this attributes, we can select multiple option from given list.

<OPTION> Element:

The <OPTION> tag define an option in a selection list. We can use the <OPTION>tag inside a <SELECT> tag.

Example:

```
<OPTION
        Value="optionvalue"
        Selected
>
....
</OPTION>
```

Attributes:

- **Value**
  The <option> tag can be used without any attributes, but you usually need the value attribute, which indicates what is sent to the server on form submission.

- **Selected**
  This attribute is used to specify that the option is selected by default.

- **Disabled**
  Disabled attribute specifies that an option should be disabled. With the use of disabled attribute user did not able to select specified option using mouse or keyboard event.

<OptGroup> element

OptGroup element is sub tag of <Select> element. This element is used to create a group of specific category options in your drop-down list within a select element. This one makes it easier for user to select their choices form multiple types of groups. If there are long list of options into drop-down control, groups of related options are easier to handle for a user.

Atmiya University Rajkot

Attribute:

- **Label** – This attribute specifies a label for an option-group. The name of the group of options, which the browser can use when labelling the options in the user interface. This attribute is mandatory if this element is used.

Example:

```
<select>
        <optgroup label="Web-Designing">
                <option value=html>HTML</option>
                <option value=css disabled>CSS</option>
                <option value=js>JavaScript</option>
        </optgroup>
        <optgroup label="Multimedia">
                <option value=AE>AfterEffect</option>
                <option value=PS>Photoshop</option>
                <option value=Fls>Flash</option>
        </optgroup>
</select>
```

Output:

28. <Details> element

The <details>tag specifies additional details, which can view or hide by user in web-browser. The details element can be used to create an interactive widget that the user can open and close. Any type sort content can be put inside the <details> tag. The content of a <details> element should not be visible unless the open attribute is set.

Attribute:

- **Open:** The open attribute is a Boolean attribute. This attribute specifies that the details should be visible (open) to the user.

Sub Element: <Summary>

The <details> element is used to pair a <summary> statement with additional related details. The <summary> is displayed, and a user can view or hide additional details by clicking on the summary.

The <summary> tag is used to specify a visible heading for the details. The heading between opening and closing element <summary>can be clicked to view or hide the details.

Rajkot

Example:

```
<details>
    <summary>HTML</summary>
    Hyper Text Mark-up Language
</details>
```

Output: ▼HTML
Hyper Text Markup Language

29. <Fieldset>&<Legend> element

The <fieldset> tag draws a box around the related or group elements.

HTML <fieldset> tag is used to group the logically related fields/labels contained within an HTML form. The use of this tag is optional while creating an HTML form but using <filedset>, it is easy to understand the purpose of grouped elements of form. The <legend> tag is used with the <fieldset> element as a first child to define the caption for the grouped related fields.

The tag provides an opportunity to break forms down into logical sections. In the browser, a box around content is drawn.

Sub Element: <Legend>

The <legend> tag is used to define a caption of a logical section defined by the <fieldset> element.

HTML <legend> tag used to add a caption (title) to a group of contents that are grouped together into the <fieldset> tag. The <legend> element always work with the <fieldset> as a sub-tag.

Example:

```
<fieldset>

    <legend>Atmiya University</legend>
    ----------
    ----------
</fieldset>
```

Output:

Atmiya University
- - - - - - - - - - - -
- - - - - - - - - - - -

Attribute:

- **Align:** This attribute is used to set alignment of legend text. It has three values left, right and center.

Atmiya University Rajkot

30. <link> Tag

Use the <link> tag to link external files such as style sheets into your document. The <link> tag defines the relationship between a document and an external resource. The <link> tag is the most used to link to style sheets. This tag is used in <head> section.

Example:

```
<link rel="stylesheet" href="url" type="text/css">
```

Attributes:

- **REL** = "filetype"
  Specifies the kind of file to be linked.
  For an external style sheet, the value is "stylesheet".
- **TYPE** = "type"
  Specifies more information about the particular type of file to be linked to, if that information is needed.
  For style sheets the value can be "text/css" for cascading style sheets, or "text/javascript" for JavaScript style sheets.
- **HREF** = "location"
  Specifies a destination URL for the link.
  Example:

```
<html>
    <head>
        <link rel="stylesheet" type="text/css" href="styles.css" >
        </head>
        <body>
        <h1> ATMIYA University </h1>
        <p> I am formatted with a linked style sheet… </p>
    </body>
</html>
```

HTML Character Entities:

- Some characters like the < character, have a special meaning in HTML, and therefore cannot be used in the text.
- To display a less than sign (<) in HTML, we have to use a character entity.

Character Entities:

- Some characters have a special meaning in HTML, like the less than sign (<) that defines the start of an HTML tag. If we want the browser to actually display these characters we must insert character entities in the HTML source.
- A character entity has three parts: an ampersand (&), an entity name or a "#" and an entity number, and finally a semicolon (;).
- To display a less than sign in HTML document, we must write: < or <

Atmiya University Rajkot

- The advantage of using a name instead of a number is that a name is easier to remember. The disadvantage is that not all browsers support the newest entity names, while the support for entity numbers is very good in almost all browsers.
- Note that the entities are case sensitive.

Non-Breaking Space

- The most common character entity in HTML is the non-breaking space.
- Normally HTML will truncate spaces in your text. If you write 10 spaces in your text HTML will remove 9 of them. To add spaces to your text, use the   character entity.

The most common Character Entities:-

Result	Description	Entity Name	Entity Number
	Non breaking		
<	Less than	<	<
>	Greater than	>	>
&	Ampersand	&	&
“	Quotation mark	"	"
‘	Apostrophe	' (does not work In IE)	'

Some other commonly used Character Entities;

Result	Description	Entity Name	Entity Number
₹	Rupee		₹
¢	Cent	¢	¢
£	Pound	£	£
¥	Yen	¥	¥
€	Euro	€	€
§	Section	§	§
©	Copyright	©	©
Æ	Registered Trademark	®	®
x	Multiplication	×	×
÷	Division	÷	÷

Atmiya University Rajkot

Question Bank: (1 Mark Questions)

1) What is the full form of HTML? – **Hyper Text Mark-up Language.**
2) Which attribute is used to change the default font color using Body tag? – **Text**
3) Which font size is default in HTML document? – **3**
4) What is the range of font size in HTML document? – **1 to 7**
5) Which attribute is used to change font in Font element? – **Face**
6) How many values are available in the behavior attributes of Marquee tag? – **3**
7) Which value is default in behavior attribute of Marquee element? – **Scroll**
8) How many values are available in the direction attributes of Marquee tag? – **4**
9) Which attribute is used to scroll marquee text from left to right side? – **Direction**
10) Which type of hyperlink is used to connect the link with current page's content? – **Internal link**
11) Internal link is known as _____ in HTML document. – **Bookmark**
12) Which attributes are used in <Link> element in HTML? – **Rel, Type, Href**
13) Which attribute is common in <OL> and <UL> element in HTML? – **Type**
14) Which values are used in type attribute of <UL> element? – **Disc, Circle, Square**
15) Which attribute is compulsory in <Img> tag? – **SRC**
16) Which element is used to give a title in HTML Table? – **Caption**
17) Which attribute is used to give a space between two cells of HTML table? – **Cellspacing**
18) Which attribute is used to set the content at top, bottom or middle in HTML cell? – **Valign**
19) Which Character Entity name is used to display Registered Trademark in HTML document? – **®**
20) There are only two values (Left & Right) available in image alignment. (True/False) – **True**
21) We can't set the justify alignment in <H1> to <H6> element. (True/False) – **False**
22) Height attribute is used to specify the thickness of <HR> element in HTML. (True/False) – **False**
23) "∧" entity name is used to display "&" character entity. (True/False) – **False**
24) Which attributes are used in <Form> of HTML? – **Action, Method, Name**

Atmiya University Rajkot

25) Which values are used in Method attribute of Form? – **Get, Post**
26) Which value is default for method attribute in form? – **Get**
27) What value is the default in type attribute of <Input>? – **Text**
28) Which value is used in type attribute to select one option from multiple choice in form? – **radio**
29) Which control is used to select zero or more options from multiple choice in form? – **Checkbox**
30) Which value is used in type attribute to upload file in form? – **File**
31) Which attribute is used to specify the limitation of input character in textbox? – **Maxlength**
32) Which element is used to input the multiple line into the control field? – **Textarea**
33) Which attribute is used in <textarea> element? – **Cols, Rows, Name**
34) Which element is used to create a pull-down menu in form? – **Select**
35) Which attribute is used to select more choice in pull down menu? – **Multiple**
36) Which attribute is used to specify that the option is selected by default in pulldown menu? – **Selected**
37) Which value is used to input only numeric value in type attribute of Input? – **Number**
38) Which attributes are restricted in range type of input? – **Min & Max**
39) Which element can be used to create an interactive widget that the user can open or close? – **Details element**
40) Which element is sub element of <details> element? – **Summary element**
41) Which element is parent element of <legend> in HTML? – **Fieldset element**
42) Which attribute is used in Legend tag? – **Align**
43) Which attribute is used to add source file in <source> element to insert audio? –**SRC**
44) Which attribute is used to insert video control like Play/Pause and Volume in Video element? –**Control**
45) Which attribute is used to set an image in beginning of video clip in <video> element? – **Poster**
46) Which attribute specifies that the video will automatically start over again, upon reaching the end? – **Loop**

Atmiya University Rajkot

Question Bank: (3 Marks Questions)

1) Describe types of tag.

Ans. Singular tag and Paired tag – 3 marks

2) What is Webpage and Website?

Ans. Explanation of webpage & website – 3 marks

3) Explain Head section.

Ans. Title, Style, Link in Head tag – 3 marks

4) Explain Mark, Abbr and Div tag.

Ans. Explanation of Mark, Abbr, Div – 3 marks

5) Explain Link, Alink and Vlink attribute.

Ans. Explanation of Link, Alink, Vlink – 3 marks

6) Explain Font element with an attribute.

Ans. Font element with different attributes – 3 marks

7) Explain Colgroup element with an example.

Ans. Colgroup and Col element with an example– 3 marks

8) Explain any three controls with an example.

Ans. Three controls and its example– 3 marks

9) Explain any three restricted attributes of form.

Ans. Three restricted attributes– 3 marks

10) Explain <OptGroup> with an example.

Ans. Optgroup, Option and Example– 3 marks

11) Explain Fieldset and Legend.

Ans. Fieldset and Legend– 3 marks

12) What is Plug-in? Explain <embed>.

Ans. Plug-in and Embed element– 3 marks

13) What is Plug-in? Explain <embed>.

Ans. Plug-in and Embed element– 3 marks

14) Any type of coadding of webpage.

Ans. Webpage Code – 3 marks

Atmiya University Rajkot

Question Bank: (5 Marks Questions)

1) What is HTML? Describe Website and Webpage.

Ans. What is HTML? – 2 marks
Website and Webpage. – 3 marks

2) Explain HTML Documents Structure.

Ans. HTML Structure – 1 mark
Head Section – 2 marks
Body Section – 2 marks

3) Describe the Body element with its attributes.

Ans. About Body element – 1 mark
Attributes of body elements – 4 marks

4) Explain <P> tag, heading tag and <font> element with its attributes and an example.

Ans. <P>, <H1> to <H6> and <Font> - Introduction and attributes – 5 marks

5) Describe the HR element with various attributes in detail.

Ans. HR Description – 1 mark
Attributes of HR element – 4 marks

6) Explain Marquee element with its attributes.

Ans. Marquee explanation – 1 mark
Its attributes – 4 marks

7) What is Hyperlink? Describe Anchor tag with its various attributes.

Ans. What is Hyperlink? – 1 mark
Different types of links – 1 mark
Hyperlink in Image – 1 mark
Attributes of Anchor tag – 2 marks

8) What is Bookmark? Describe internal link with an example.

Ans. What is Bookmark? – 1 mark
Explanation of Internal link – 3 marks
Example of Internal link – 1 mark

9) Explain the elements and attributes for List.

Ans. What is a list? – 1 mark
Types of Lists with elements and attributes – 4 marks

Atmiya University Rajkot

10) Explain Image handling.

Ans. Explanation about Image element – 1 mark
Image attributes – 4 marks

11) Describe all elements and their attributes related to table tag.

Ans. Explanation about Table element – 1 mark
All elements and its attributes related to table – 4 marks

12) Explain character entities in detail.

Ans. What are character entities? Explanation – 3 marks
List of character entities with entities name and entities code. – 2 marks

13) Explain Form element with its attributes.

Ans. What is form? – 2 marks
Form Attributes – 3 marks

14) Describe Form with its all controls.

Ans. What is Form? – 1 mark
Controls of Form – 4 marks

15) Explain Input element with type attribute.

Ans. About Input element – 1 mark
About type attribute with its values – 4 marks

16) Explain Input element with its attributes.

Ans**.** About Input element – 1 mark
Attributes of Input element – 4 marks

17) Explain restricted attributes in form with an example.

Ans**.** Explanation of restricted attributes – 5 marks
(Maxlength, required, min, max, readonly, disabled)

18) Describe textarea and pull-down menu.

Ans. About Textarea and Select element – 1 mark
Textarea attributes – 1 mark
Attributes of Select and Option element – 3 marks

19) Explain Multimedia with Audio element.

Ans. What is Multimedia? – 1 mark
Audio element in HTML. – 1 mark
Attributes of Audio element. – 3 marks

Atmiya University Rajkot

20) Explain Multimedia with Video element.

Ans. What is Multimedia? – 1 mark
Video element in HTML. – 1 mark
Attributes of Video element. – 3 marks

21) Explain Colgroup & Optgroup with an example.

Ans. Colgroup with Col – 2 marks
Optgroup with Option– 2 marks
Both Example – 1 mark

22) Explain Fieldset and Legend with an example.

Ans. Fieldset element – 2 marks
Legend element – 2 marks
Example – 1 mark

23) Any type of Coadding of webpage.

Ans. Webpage Code – 5 marks

Atmiya University Rajkot

UNIT – 2
Cascading Style Sheet

What is CSS?

CSS stands for Cascading Style Sheets. CSS is used to control the style of a web document in a simple and easy way.

Styles are used generally for web-designing purposes, so it works with HTML. Styles are normally stored in Style Sheets.

External Style Sheets can save your lot of work. External Style Sheets are stored in CSS files. Multiple style definitions will cascade into one.

Styles Solve a Common Problem:

HTML tags were originally designed to define the content of a document. Supposed to say, "This is a header", "This is a paragraph", "This is a table", by using tags like <h1>, <p>, <table>, and so on. The layout of the document was supposed to be taken care of by the browser, without using any formatting tags.

As the two major browsers - Netscape and Internet Explorer - continued to add new HTML tags and attributes (like the <font> tag and the color attribute) to the original HTML specification, it became more and more difficult to create Web sites where the content of HTML documents was clearly separated from the document's presentation layout.

To solve this problem, the World Wide Web Consortium (W3C) created STYLES in addition to HTML.

All major browsers support Cascading Style Sheets.

Style Sheets Can Save a Lot of Work:

- Styles sheets define HOW HTML elements are to be displayed, just like the font tag and the color attribute in HTML 3.2. Styles are normally saved in external .css files.
- External style sheets enable you to change the appearance and layout of all the pages in your Web, just by editing one single CSS document!

Atmiya University Rajkot

- CSS is a breakthrough in Web design because it allows developers to control the style and layout of multiple Web pages all at once.
- As a Web developer you can define a style for each HTML element and apply it to as many Web pages as you want. To make a global change, simply change the style, and all elements in the Web are updated automatically.

Multiple Styles Will Cascade into One:

Style sheets allow style information to be specified in many ways.
Styles can be specified inside a single HTML element, inside the <head> element of an HTML page, or in an external CSS file.
Even multiple external style sheets can be referenced inside a single HTML document.

Uses of CSS:

CSS can be used to create number of text effects, such as:

1. **Text Formatting and color**
   - Choosing specific fonts and font size.
   - Setting bold, italics, underline, and text shadows.
   - Changing text color and background color.
   - Changing the colors of link or removing underlining.
   - Aligning text.
   - Stretching and adjusting text size and line spacing.
   - Transforming sections of text to upper, lower or mixed case.
2. **Graphical Appearance and Layout**
   - Setting a background graphic, controlling its location, tiling, and scrolling.
   - Drawings borders and outlines around sections of a page.
   - Setting horizontal and vertical margins on all elements, as well as vertical and horizontal padding.
   - HTML tables, forms, and lists are presented.
3. **Dynamic Action**
   - Mouse over effects on links.
   - Dynamically inserted content before or after HTML tags.
   - Automatic numbering of page elements.

CSS Syntax:

```
<STYLE type="text/css" >
        Selector {property: value ; property: value ; ....}
</STYLE>
```

A CSS comprises of style rules that are interpreted by the browser and then applied to the corresponding elements in your document.

Atmiya University Rajkot

A style rule is made of three parts…

1) **Selector** – A selector is an HTML tag at which a style will be applied. This could be any tag like <h1> or <table> etc.
2) **Property** – A property is a type of attribute of HTML tag. Put simply, all the HTML attributes are converted into CSS properties. They could be color, border etc.
3) **Value** – Values are assigned to properties. For example, color property can have value either red or #F1F1F1 etc.

You can put CSS Style Rule Syntax as follows…

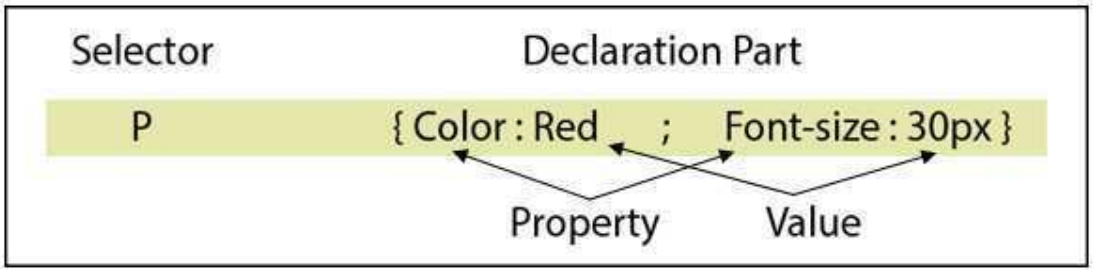

The style assign a process accomplished with the <STYLE>….</STYLE>tags.The <STYLE></STYLE> HTML tags are written within the <HEAD>…</HEAD> tags.In the <STYLE> Tag, the expression "TYPE=text/css" indicate that the style sheet Confirm to CSS syntax.

The CSS syntax is made up of three parts: a selector, a property and a value.The selector is normally the HTML element/tag you wish to define, the property is the Attribute you wish to change and each property can take a value. The property and value are separated by a colon and surrounded by curly braces:

- **Example:**
  body {color: black}

CSS Comments:

You can insert comments into CSS to explain your code, which can help you when you edit the source code at a later date. A comment will be ignored by the browser.

A CSS comment begins with "/*", and ends with "*/", like this:

```
/* This is a comment */
   P{
            text-align: center;
            /* This is another comment */
            Color:red
   }
```

Atmiya University Rajkot

Types of CSS and How to Insert a Style Sheet:

- There are three ways of inserting a style sheet:
  1) External Style Sheet
  2) Internal Style Sheet
  3) Inline Styles

1) External Style Sheet

An external style sheet is ideal when the style is applied to many pages. With an external style sheet, you can change the look of an entire Web site by changing one file. Each page must link to the style sheet using the <link> tag.

The <link> tag goes inside the head section:

```
<head>
        <link rel="stylesheet" type="text/css" href="css file name">
</head>
```

The browser will read the style definitions from the css file and format the document according to it. An external style sheet can be written in any text editor. The file should not contain any html tags. Your style sheet should be saved with a .css extension.

An example of a style sheet file is shown below…

Style.css

```
P{
        Color: yellow; Font-family: arial;
}
```

Simple.html

```
<html>
    <head>
        <link rel="stylesheet" type="text/css" href="Style.css">
    </head>
    <body>
        <P>ATMIYA UNIVERSITY</P>
    </body>
<html>
```

2) Internal Style Sheet

An internal style sheet should be used when a single document has a unique style. You define internal styles in the head section by using the <style> tag, like this:

Atmiya University Rajkot

```
<html>
    <head>
    <style type="text/css">
            p { color: red; font-family: arial }
    </style>
    </head>
</html>
```

The browser will now read the style definitions and format the document according to it.

3) Inline Styles

An inline style loses many of the advantages of style sheets by mixing content with presentation. Use this method sparingly, such as when a style is to be applied to a single occurrence of an element.
To use inline styles, you use the style attribute in the relevant tag. The style attribute can contain any CSS property.

The example shows how to change the color & the left margin of a paragraph…

```
<p style="color: orange; font-size: 20px"> Hello ATMIYA </p>
```

Multiple Style Sheets

If some properties have been set for the same selector in different style sheets, the values will be inherited from the more specific style sheet.
For example, an external style sheet has these properties for the h3 selector:

h3 { Color : red; text-align : left; font-size : 8pt }

And an internal style sheet has these properties for the h3 selector:

h3 { Text-align : right; font-size : 20pt }

If the page with the internal style sheet also links to the external style sheet the properties for h3 will be:

Color : red; text-align : right; font-size : 20pt

The color is inherited from the external style sheet and the text-alignment and the font-size is replaced by the internal style sheet.

Types of Selectors:

1) The Tag Selector

The tag selector in CSS is used to select and style all instances of a specific HTML element on a webpage. The tag selector is written by simply using the name of the HTML element as the selector in the CSS code.

Ex.:
```
<style>
        P { text-align : justify }
        H1 { color : red }
</style>
```

Atmiya University Rajkot

2) The Class Selector

With the class selector you can define different styles for the same type of HTML element. Say that you would like to have two types of paragraphs in your document: one right-aligned paragraph, and one center-aligned paragraph.
Here is how you can do it with styles:

```
.right { text-align : right }
p.center { text-align : center }        // this style can be used only in p elements
```

You must use the class attribute in your HTML document:

```
<p class="right"> This paragraph will be right-aligned. </p>
<p class="center"> Atmiya University </p>
```

You can also omit the tag name in the selector to define a style that will be used by all HTML elements that have a certain class.
In the example below, all HTML elements with class="center" will be center aligned:

```
.center {text-align: center}
```

In the code below both the h1 element and the p element have class="center".
This means that both elements will follow the rules in the ".center" selector:

```
<h1 class="center">
   This heading will be center aligned
</h1>
<p class="center">
   This paragraph will also be center aligned.
</p>
```

3) The Id Selector

With the id selector you can define the same style for different HTML elements.
The style rule below will match any element that has an id attribute with a value of "green":

```
#green {color: green}
```

The rule above will match both the h1 and the p element:

```
<h1 id="green">Some text</h1>
<p id="green">Some text</p>
```

The style rule below will match a P element that has an id with a value of "para1":

```
p#para1 { color : red }
```

The style rule below will match any p element that has an id attribute with a value of "green":

```
p#green {color: green}
```

The rule above will not match an h1 element:

```
<h1 id="green">Some text</h1>
```

Atmiya University Rajkot

CSS Font Properties:

The CSS font properties allow you to change the font family, boldness, size, and the style of a text.

- font-weight property
- font-style property
- font-size property
- font-family property
- font-variant property

Font-weight property:

The font-weight property sets how thick or thin characters in text should be displayed.

Normal	:	Value 'Normal' defines a normal character in selected content.
Bold	:	Value 'Bold' displays a thick character into content area.
Bolder	:	Value 'Bolder' displays a thicker character into content area.
Lighter	:	Value 'Lighter' displays a thick character into selected tag.
100 to 900	:	It defines from thin to thick characters. Value 400 is the same as normal value and 700 is the same as bold value.

➢ **Example:**

P{ font-weight : bold }

Font-style property:

The font-style property sets the style of a font. It is mostly used to specify italic text.

Normal : Value 'Normal' displays a normal font into content area.

Italic : Value 'Italic' displays a italic font into content area.

➢ **Example:**

P { font-style : italic }

Font-size property:

The font-size property sets the size of a text. Being able to manage the text size is important in web design. However, you should not use font size adjustments to make paragraphs look like headings, or headings look like paragraphs.

The font-size value can be an absolute, or relative size.

xx-small/x-small /small/medium/ large/x-large/ xx-large/xxx-large	:	Sets the size of the font to different sizes, from xx-small to xxx-large
Smaller	:	Sets the font-size to a smaller size than the parent element
Larger	:	Sets the font-size to a larger size than the parent element
Length	:	Sets the font-size to a fixed size in px.
%	:	Sets the font-size to a % of the parent element

Rajkot

➢ **Example:**

```
Body { font-size : x-large }
P { font-size : 10px }
```

Font-family property:

The font-family property is a prioritized list of font family names for an element. The browser will use the first value it recognizes. Separate each value with a comma. The font family of a text is set with the font-family property. The font-family property should hold several font names. If the browser does not support the first font, it tries the next font, and so on.

Note: If the name of a font family is more than one word, it must be in quotation marks, like: "Times New Roman".

➢ **Example:**

```
Body { Font-family : courier, serif }
P { Font-family : arial, "lucida console", sans-serif }
<p style="font-family: arial, 'lucida console', sans-serif">
```

Font-variant property:

The font-variant property is used to display text in a small-caps font, which means that all the lower case letters are converted to uppercase letters, but all the letters in the small-caps font have a smaller font-size compared to the rest of the text.

Normal :	The browser displays a normal font
Small-caps :	The browser displays a small-caps font

➢ **Example:**

```
P { font-variant: small-caps }
```

CSS Text Properties:

The CSS text properties allow you to control the appearance of text. It is possible to change the color of a text, increase or decrease the space between characters in a text, align a text, decorate a text, indent the first line in a text, and more.

- color property
- text-align property
- text-decoration property
- text-transform property
- text-indent property
- text-shadow property

Color property

The color property sets the color of a text.

Color : The color value can be a color name (red), a rgb value (rgb(255,0,0)), or a hex number (#ff0000).

Atmiya University Rajkot

- **Example:**
  Body{color: rgb(255,255,0) }

Text-align property

The text-align property aligns the text in an element. It is used to set the horizontal alignment of a text. A text can be left or right aligned, centered, or justified.

Left	:	Aligns the text to the left
Right	:	Aligns the text to the right
Center	:	Centers the text
Justify	:	Define justified both margin

- **Example:**
  P { text-align: center }

Vertical text alignment in table

The text in a table is aligned with the text-align and vertical-align properties. The text-align property sets the horizontal alignment, while vertical align property sets the vertical alignment, like top, bottom, or middle.

Top	:	Align the text to the top of cell.
Bottom	:	Align the text to the bottom of cell.
Middle	:	Set the text in middle of cell.

- **Example:**
  Td, Th { vertical-align : bottom }

Text-decoration property

- ✓ Text-decoration-line
- ✓ Text-decoration-style
- ✓ Text-decoration-color
- ✓ text-decoration-thickness
- ✓ text-decoration (shorthand property)

❖ **Text-decoration-line:** The text-decoration-line property decorates the text. It is used to set or remove decorations from text. The value text-decoration:none; is often used to remove underlines from links.

None	:	Defines a normal text
Underline	:	Defines a line under the text
Overline	:	Defines a line over the text
Line-through	:	Defines a line through the text

- **Example:**
  B { text-decoration-line : underline }

❖ **Text-decoration-style**

The text-decoration-style property is used to set the style of the decoration line. Value of this property is solid, double, dotted, dashed or wavy.

- **Example:**
  B { text-decoration-style : Solid } // double, dotted, dashed, wavy

Atmiya University Rajkot

❖ **Text-decoration-color**

The text-decoration-color property is used to set the color of the decoration line.

➢ **Example:**

B { text-decoration-color : red }

❖ **Text-decoration-thickness**

The text-decoration-thickness property is used to set the thickness of the decoration line. Value of this property can be auto, in px or in %.

➢ **Example:**

B { text-decoration-thickness : auto } // 5px, 20%

❖ **Text-decoration (shorthand property)**

This shorthand property is used to show the effect of all the above properties in one place.

➢ **Example:**

B { text-decoration : underline red double 5px }

Text-transform property

The text-transform property controls the letters in an element. It is used to specify uppercase and lowercase letters in a text. It can be used to turn everything into uppercase or lowercase letters or capitalize the first letter of each word.

None	:	Defines normal text, with lower case letters and capital letters
Capitalize	:	Each word in a text starts with a capital letter
Uppercase	:	Defines only capital letters
Lowercase	:	Defines no capital letters, only lower-case letters

➢ **Example:**

P { text-transform : uppercase }

Text-indent property

The text-indent property is used to specify the indentation of the first line of a paragraph.

➢ **Example:**

```
p {
    text-indent: 50px;
}
```

Text-shadow property

The text-shadow property specifies shadow to text.

In its simplest use, you only specify the horizontal shadow (2px), the vertical shadow (2px), blur effect (5px) and color red.

➢ **Example:**

h1 { text-shadow : 2px 2px 5px red }

Atmiya University Rajkot

CSS Spacing Properties

The spacing property is specified the different types of spacing in CSS.

- word-spacing property
- letter-spacing property
- line-height property

Word-spacing property

The word-spacing property increases or decreases the white space between words. Negative values are allowed.

Normal : Defines normal space between words
Length : Defines a fixed space between words

➢ **Example:**

```
P { word-spacing : 30px }
P { word-spacing : -0.5px }
```

Letter-spacing property

The letter-spacing property increases or decreases the white space between characters. Negative values are allowed.

Normal : Defines normal space between characters
Length(px/pt/mm/cm…) : Defines a fixed space between characters

➢ **Example:**

```
p { Letter-spacing : 12px }
p { Letter-spacing : -0.5px }
```

Line-height property

The line-height property increases or decreases the spacing between two lines of paragraph. A value of line-height property should be in numeric value.

➢ **Example:**

```
p { Line-height : 2 }
p { Line-height : 70px }
```

CSS Border Properties

The CSS border properties allow you to specify the style, width and color of an element's border. In HTML we use tables to create borders around a text, but with the CSS border properties we can create borders with nice effects, and it can be applied to any element.

Border-style property

The border-style property sets the style of the four borders, can have from one to four styles.

Atmiya University Rajkot

None	:	Defines no border
Hidden	:	The same as "none", except in border conflict resolution for table elements
Dotted	:	Defines a dotted border. Renders as solid in most browsers
Dashed	:	Defines a dashed border. Renders as solid in most browsers
Solid	:	Defines a solid border
Double	:	Defines two borders. The width of the two borders are the same as the border-width value
Groove	:	Defines a 3D grooved border. The effect depends on the border-color value
Ridge	:	Defines a 3D ridged border. The effect depends on the border-color value
Inset	:	Defines a 3D inset border. The effect depends on the border-color value
Outset	:	Defines a 3D outset border. The effect depends on the border-color value

- **Example:**
  table { border-style : dotted dashed solid double }

  Top border will be dotted, right border will be dashed, bottom border will be solid, left border will be double.

Border-color property

The border-color property sets the color of the four borders. This property can take one to four colors. Always declare the border-style property before the border-color property. An element must have borders before you change the color of them.

Color : The color value can be a color name (red),
A RGB value (RGB (255,0,0)), or a hex number (#FF0000).

- **Example:**
  table { border-color : red } // All four borders will be red.
  table {border-color: red green blue yellow}

  Top border will be red, right border will be green, bottom border will be blue, left border will be yellow.

Border-width property

The border-width property is a shorthand property for setting the width of the four borders in one declaration, can have from one to four values.

Thin	:	Defines a thin border.
Medium	:	Defines a medium border.
Thick	:	Defines a thick border.
Length	:	Allows you to define the thickness of the borders. (i.e.: 20px)

Atmiya University Rajkot

- **Example:**
  table { border-width : thin } // All four borders will be thin.

  table { border-width : thin medium thick none } // Top border will be thin, right border will be medium, bottom border will be thick, left side will have no border.

Border-top-width property

The border-top-width property sets the width of an element's top border.

Thin	:	Defines a thin top border.
Medium	:	Defines a medium top border.
Thick	:	Defines a thick top border.
Length	:	Allows you to define the thickness of the top border.

- **Example:**
  Table { border-top-width : thin }
  Table { border-top-width : 0.5cm }

Border-bottom-width property

The border-bottom-width sets the width of an element's bottom border.
Value: Same as border-top-width property

- **Example:**
  Table{border-bottom-width: thin}

Border-left-width property

The border-left-width property sets the width of an element's left border.
Value : Same as border-top-width property

- **Example:**
  Table{border-left-width: thin}

Border-right-width property

The border-right-width property sets the width of an element's right border.
Value : Same to border-top-width property

- **Example:**
  Table{ Border-right-width: thin }

Border-top, Border-left, border-right and border-bottom property

The border-top property is a shorthand property for setting all the properties for the top border in one declaration.

The border-left property, border-right property, border-bottom property is a shorthand property for setting all the properties for the left border, right border& bottom border in one declaration respectively.

Aminta University Rajkot

Value	Description
border-top-width border-top-style border-top-color	Sets the properties for the top border

- **Example:**
  Table { border-top : thin dotted #00FF00}
  Table { border-right : solid #0000FF }

Border property

There are many properties to consider when dealing with borders.
To shorten the code, it is also possible to specify all the individual border properties in one property.
The border property is a shorthand property for the above individual border properties:

- **Example:**
  P { border: 5px dashed orange}

Border-radius property

The border-radius property is used to add rounded corner to an element's border.
With the use of this elements, we can set the four corner's radius separately.

1) Border-top-left-radius
2) Border-top-right-radius
3) Border-bottom-left-radius
4) Border-bottom-right-radius

- **Example:**
  Img { border-radius: 30% 0% 30% 0% } *or*
  Img { border-top-left-radius:30% ; border-bottom-right-radius:30% }

  <img src="ATMIYA_LOGO.jpg">

  Output:

Collapse Borders (Only in table element)

The border-collapse property sets whether the table borders are collapsed into a single border or separated:

- **Example:**
  Table { border-collapse : collapse }

Atmiya University Rajkot

CSS Margin Properties

The CSS margin properties define the space around elements. It is possible to use negative values to overlap content. The top, right, bottom, and left margin can be changed independently using separate properties. A shorthand margin property can also be used to change all of the margins at once. Netscape and IE give the body tag a default margin of 8px. Opera does not! Instead, Opera applies a default padding of 8px, so if one wants to adjust the margin for an entire page and have it display correctly in Opera, the body padding must be set as well.

- margin-top property
- margin-bottom property
- margin-left property
- margin-right property
- margin

Margin-top property

The margin-top property sets the top margin of an element. Negative values are allowed.

Auto	:	The browser sets atop margin
Length	:	Defines affixed top margin
%	:	Defines atop margin in % of the total height of the document

➢ **Example:**

```
H1 { margin-top: 10px}
H2 { margin-top: 20px}
```

Margin-bottom property, margin-left property, margin-right property

The margin-bottom property, margin-left property & margin-right property sets the bottom margin, left margin & right margin of an element respectively. Negative values are allowed.

Value: Same as margin-top property

➢ **Example:**

```
h1  { margin-left : 10px ; margin-right : 20px }
h2  { margin-bottom : 30px }
```

Margin property

The margin property is a shorthand property for setting all the properties for the four margins in one declaration. Negative values are allowed.

Margin-top :	Sets the properties for the margins. The values come in%
Margin-right :	(defines a margin in % of the total height/width of the
Margin-bottom :	document),
Margin-left :	Length : (defines a fixed margin), and auto (the browser sets a margin)

Atmiya University Rajkot

- **Example:**

  h1{margin:10px}
  All four margins will be 10px.

  h1 {margin: 10px 2%}
  Top and bottom margin will be 10px, left and right margin will be 2%of the total width of the document.

  h1 { margin : 10px 2% -10px}
  Top margin will be 10px, left and right margin will be 2%of the total width of the document, bottom margin will be -10px

  h1 { margin : 10px 2% -10px auto}
  Top margin will be 10px, right margin will be 2%ofthe total width of the document, bottom margin will be -10px, left margin will be set by the browser

CSS Padding Properties

The CSS padding properties define the space between the element border and the element content.
Negative values are not allowed. The top, right, bottom, and left padding can be changed independently using separate properties.
A shorthand padding property is also created to control multiple sides at once.

- padding-top property
- padding-bottom property
- padding-left property
- padding-right property
- padding property

Padding-top property

The padding-top property sets the top padding (space) of an element. Negative values are not allowed.

Length(Pixel or %) **:** Defines a top padding in % of the height of the closest element.

- **Example:**
  h1 { padding-top:10px }

Padding-bottom property, padding-left property, padding-right property

The padding-bottom property, padding-left property, padding-right property sets the bottom padding (space), left padding (space), and right padding (space) of an element respectively. Negative values are not allowed.

Value : Same to padding-top property

- **Example:**
  h1 { padding-right:10px; padding-left: 10px; padding-bottom:10px }

Atmiya University Rajkot

Padding property

The padding property is a shorthand property for setting all of the padding properties in one declaration. Negative values are not allowed.

padding-top padding-right padding-bottom padding-left	Sets the padding. The values comes in%(defines padding in % of the width of the closest element) and length (defines affixed padding)

- **Example:**

h1 { padding: 10px }

The padding will be 10px on all four sides h1

h1 { padding: 10px 2% }

Top and bottom padding willbe10px, left and right padding will be 2% of the width of the closest element.

h1 { padding: 10px 2% 15px }

Top paddingwillbe10px, left and right padding will be 2%of the width of the closest element, bottom padding will be 15px

h1 { padding: 10px 2% 15px 20px}

Top padding will be 10px, right padding will be 2% of the width of the closest element, bottom padding will be 15px, left padding will be 20px.

CSS Background Properties

The CSS background properties allow you to control the background color of an element, set an image as the background, repeat a background image vertically or horizontally, and position an image on a page.

- background-color property
- background-image property
- background-repeat property
- background-size property
- background-position property
- background-attachment property

Background-color property

The background-color property sets the background color of an element.

Color : The color value can be a color name (red), a RGB value (RGB(255,0,0)), or a hex number (#ff0000)

- **Example:**

P { background-color: Gray}

Background-image property

The background-image property sets an image as the background. Always set a background-color to be used if the image is unavailable.

Saurashtra University Rajkot

Url : The path to an image
None : No background image

- **Example:**

```
Body {background-image: url("stars.gif");
        background-color: #000000}
```

Background-repeat property

The background-repeat property sets if/how a background image will be repeated.

Repeat : The background image will be repeated vertically and horizontally

repeat-x : The background image will be repeated horizontally

repeat-y : The background image will be repeated vertically

no-repeat : The background-image will be displayed only once

- **Example:**

```
Body {
        background-image : url(stars.gif);
        background-repeat : repeat-x
}
```

Background-size property

The background-size property specifies the size in px of the background images. Its default value is auto.

Sets the width and height of the background image. The first value sets the width, the second value sets the height. If only one value is given, the second is set automatically to "auto".

- **Example:**

```
body {
    background: url (Atmiya.jpg);
    background-repeat: no-repeat;
    background-size: 400px 250px;
}
```

Background-attachment property

The background-attachment property sets whether a background image is fixed or scrolls with the rest of the page.

Scroll : The background image moves when the rest of the page scrolls

Fixed : The background image does not move when the rest of the page scrolls.

- **Example:**

```
Body {
        background-image : url(stars.gif);
        background-attachment : scroll
}
```

Atmiya University Rajkot

Background-position property

The background-position property sets the starting position of a background image. By default, a background-image is placed at the top-left corner of an element, and repeated both vertically and horizontally.

Value		Description
1. Top Left 2. Top Center 3. Top Right 4. Center Left 5. Center Center 6. Center Right 7. Bottom Left 8. Bottom Center 9. Bottom Right	:	If specifies only one keyword, the second value will be "center".
x-% y-%	:	The first value is the horizontal position, and the second value is the vertical. The top left corner is 0% 0%. The right bottom corner is 100%. If you only specify one value, the other value will be 50%.
x-pos y-pos	:	The first value is the horizontal position, and the second value is the vertical. The top left corner is 0 0. Units can be pixels (0px 0px) or any other CSS units. If you only specify one value, the other value will be 50%. You can mix % and positions.

- **Example:**

```
Body {
        background-image: url(stars.gif);
        background-repeat: no-repeat;
        background-position: top left
    }
```

List Items

In CSS, the list-style-type property is used to define the appearance of the list item marker, such as a bullet or number. Here are some of the common values you can use with **list-style-type**:

List-Style-Type Property

- **Unordered Lists (<ul>):**

There are some values which are used with Unordered Lists in **list style type** property

Aaniya University Rajkot

- disc: The default solid circle bullet.
- circle: An open circle bullet.
- square: A solid square bullet.
- none: No marker (no bullet).

➢ **Ordered List (<ol>):**

There are some values which are used with Ordered Lists in **list style type** property

- decimal: Numbers (1, 2, 3, 4, ...).
- decimal-leading-zero: Numbers with leading zeros (01, 02, 03, 04, ...).
- lower-roman: Lowercase Roman numerals (i, ii, iii, iv, ...).
- upper-roman: Uppercase Roman numerals (I, II, III, IV, ...).
- lower-alpha: Lowercase alphabet letters (a, b, c, d, ...).
- upper-alpha: Uppercase alphabet letters (A, B, C, D, ...).
- lower-greek: Lowercase Greek letters (α, β, γ, δ, ...).

List-Style-Image Property:

The list-style-image property in CSS allows you to use an image as the list marker instead of the default bullet or number. This property can be applied to both unordered (<ul>) and ordered (<ol>) lists.

➢ **Example:**

```
OL { list-style-type : decimal-leading-zero }
UL { list-style-type : circle }
UL { list-style-image : url("xyz.png") }
```

Styling Links

Links can be styled with any CSS property (e.g. color, font-family, background, etc.).Special for links are that they can be styled differently depending on what state they are in.

The four links states are…

- a : link – Its represents a normal link, which is unvisited link for browser.
- a : visited – its represents a link, which is visited by user.
- a : hover – A link when the user move the mouse cursor on it.
- a : active – its represents active link while user clicked on particular link.

➢ **Example:**

```
a : link {color:#FF0000;}      /* unvisited link */
a : visited {color:#00FF00;}  /* visited link */
a : hover {color:#FF00FF;}  /* mouse over link */
a : active {color:#0000FF;}  /* selected link */
```

Atmiya University Rajkot

- **When setting the style for several link states, there are some order rules:**
  a : hover MUST come after a:link and a:visited
  a : active MUST come after a:hover
- **Text Decoration** property is mostly used to remove underlines from links:
  - **Example:**
    a : link { text-decoration : none }
- **Background Color**
  The background-color property specifies the background color for links:
  - **Example:**
    a : link { background-color : red }

Scroll-behavior in Internal Link (Working with bookmark)

The scroll-behavior property in CSS is used to control the behavior of scrolls within a page when a user clicks an internal link.

Property & Values:

- **auto**: This is the default value. The scrolling will happen instantly with no smooth animation.
- **smooth**: The scrolling will smoothly glide from the current position to the target position.
- **Example:**
  html { scroll-behavior : smooth }

Filter property (Photo Filter effect)

CSS plays a good role in controlling image display. The CSS filter property adds visual effects (like blur and saturation) to an element. To perform the effect operations like blur, balancing contrast, brightness, color saturation, there are filters used into the web page.

- **Blur:**
  The blur() filter in CSS is used to apply a Gaussian blur to an image or any other HTML element. It can be given in units such as pixels (px). The higher the value, the stronger the blur. A value of 0 means no blur (default).
- **Brightness:**
  The brightness() filter in CSS is used to adjust the brightness of an image or any other HTML element. It modifies the lightness of the element, making it appear brighter or darker. A value of 1 (default) means the image retains its original brightness. A value greater than 1 brightens the image (e.g., 1.5 makes it 150% brighter).
- **Contrast:**
  The contrast() filter in CSS is used to adjust the contrast of an image or any other HTML element. It changes the difference between the light and dark parts of the image, making the dark areas darker and the light areas lighter (or the reverse). A value of 1 means the image retains its original contrast (default). A value of 0 results in a completely gray (monochrome) image.

Atmiya University Rajkot

- **Grayscale:**
  The grayscale() filter in CSS is used to convert an image (or any other HTML element) to a grayscale, making it appear black and white. The level of grayscale can be adjusted from fully colored to completely monochrome. A value of 0 means no grayscale effect (the image is fully colored). A value of 1 means the image is fully grayscale (completely black and white). Values between 0 and 1 will result in partial grayscale, where the closer the value is to 1, the more the colors fade into gray.

- **Opacity:**
  The opacity() filter in CSS is used to adjust the transparency of an image or any other HTML element. It controls how opaque or transparent the element appears. A value of 1 (default) means the element is fully opaque. A value of 0 makes the element completely transparent. Values between 0 and 1 result in varying levels of transparency, where lower values make the element more transparent.

- **Saturate:**
  The saturate() filter in CSS is used to adjust the saturation of an image or any other HTML element. Saturation refers to the intensity of the colors, where fully saturated colors are vivid and bright, while desaturated colors are more muted and closer to grayscale. A value of 1 (default) means the image retains its original saturation. A value greater than 1 increases the saturation (e.g., 2 makes the colors twice as intense). A value less than 1 decreases the saturation (e.g., 0.5 makes the image appear less vibrant or washed out). A value of 0 will completely desaturate the image, making it grayscale.

- **Drop-Shadow:**
  The drop-shadow() filter in CSS is used to apply a shadow effect to an image or any other HTML element.
  - offsetX : The horizontal distance of the shadow from the element. Positive values move the shadow to the right, and negative values move it to the left.
  - offsetY : The vertical distance of the shadow from the element. Positive values move the shadow downward, and negative values move it upward.
  - Blur-radius (optional) : The amount of blur applied to the shadow. Higher values result in more blur. If not specified, the default is 0 (sharp shadow).
  - Color (optional) : The color of the shadow. If not specified, the default is black.

  ➢ **<u>Example</u>:**

```
.blur { filter: blur(4px) }
.brightness { filter: brightness(250%) }
.contrast { filter: contrast(180%) }
.grayscale { filter: grayscale(100%) }
.opacity { filter: opacity(50%) }
.saturate { filter: saturate(7) }
.shadow { filter: drop-shadow(8px 8px 10px red)}
```

Atmiya University Rajkot

Width and Height Property

Width and height of a table, division or image is defined by the width and height properties. Its value can be in % or px.

- **Example:**

```
table { width : 100% ; height : 350px }
div { height : 50px }
img { height : 50px }
```

CSS Element Positioning

The CSS positioning properties allow you to position an element. It can also place an element behind another and specify what should happen when an element's content is too big.

Elements can be positioned using the top, bottom, left, and right properties. However, these properties will not work unless the position property is set first. They also work differently depending on the positioning method.
There are different positioning methods.

- Static Positioning
- Fixed Positioning
- Sticky positioning

Static Positioning

HTML elements are positioned static by default. A static positioned element is always positioned according to the normal flow of the page.
Static positioned elements are not affected by the top, bottom, left, and right properties.

Fixed Positioning

Elements with position fixed are positioned relative to the browser window. It means they remain in the same position even when the page is scrolled. It will not move even if the window is scrolled:

- **Example:**

```
div{
        position: fixed;
        top : 30px;
        right : 0px;
}
```

Fixed positioned elements are removed from the normal flow. The document and other elements behave like the fixed positioned element does not exist. Fixed positioned elements can overlap other elements.

Sticky Positioning

position sticky allows an element to act like normal until a certain scroll position is reached, after which it acts like fixed. This is often used to keep an element "stuck" at the top of the viewport when the user scrolls.

Atmiya Univesity Rajkot

- **Example:**

```
div{
        position : sticky;
        top:0;
 }
```

Overlapping Elements (z-index property)

When elements are positioned outside the normal flow, they can overlap other elements. The z-index property specifies the stack order of an element (which element should be placed in front of, or behind, the others). An element can have a positive or negative stack order:

- **Example:**

```
Img{
    position : fixed;
    left : 0px ;  top : 0px;
    z-index : -1;
}
```

An element with greater stack order is always in front of an element with a lower stack order.

Note: If two positioned elements overlap, without a z-index specified, the element positioned last in the HTML code will be shown on top.

CSS Column Properties

Column-count:

The column-count property specifies the number of columns of an element. All contents are divided into specified number's columns. The following example will divide the text in the element into 3 columns:

- **Ex.:**

```
P {
    column-count : 3;
}
```

Column-gap:

The column-gap property specifies the gap between two columns. The following example specifies a 40 pixels gap between the columns:

- **Ex.:**

```
P {
    column-count : 3;
    column-gap : 40px;
}
```

Atmiya University Rajkot

Column-rule:

The column-rule property is a shorthand property for setting all the column-rule like width, style and color properties. This property displays visible division between two columns. The following example sets the width, style, and color of the rule between columns:

- **Ex.:**

```
P {
    column-count : 3;
    column-rule : 1px solid red;
}
```

CSS Text Over Flow Property

Overflow

The overflow property specifies whether to clip the content or to add scrollbars when the content of an element is too big to fit in the specified area. The overflow property only works for block elements with a specified height.
The overflow property has the following values:

- **Visible :** This value is default value in overflow. The overflow is not clipped. The content renders outside the element's box.
- **Hidden :** The overflow is clipped, and the rest of the content will be invisible
- **Scroll :** he overflow is clipped, and a scrollbar is added to see the rest of the content
- **Auto :** Similar to scroll, but it adds scrollbars only when necessary.

- **Example:**

```
div {
        overflow : auto;      // scroll / visible / hidden
}
```

Opacity Property

The opacity property in CSS is used to control the transparency level of an element. It affects not only the element itself but also its children (if any), making everything inside the element equally transparent.
A value of 0 makes the element completely transparent (invisible). A value of 1 makes the element completely opaque. Values between 0 and 1 make the element partially transparent.

- **Example:**

```
div {
        Opacity : 0.7
}
```

Atmiya University Rajkot

Focus

In CSS, the focus is used to apply styles to an element when it has focus, typically when a user clicks on an interactive element like an <input>, or <textarea>. Controller applied a style while an element has focus and ready to receive user input.

- **Example:**
  Input : focus { Background-color : orange }

Resize

The resize property in CSS controls the ability of users to resize an element, such as a <textarea>, by dragging its corners or edges. This is particularly useful for text areas where you want to give users the option to adjust the size of the input field.

- **Values:**

- None : Disables resizing. The user cannot resize the element.
- Both : Allows resizing both horizontally and vertically. This is the default value for textarea in many browsers.
- Horizontal : Allows resizing only horizontally.
- Vertical : Allows resizing only vertically.

- **Example:**
  textarea { Resize : None }

Atmiya University Rajkot

Question Bank: (1 Mark Questions)

1) Which extension is used in external CSS file? – **.CSS**
2) Which tag is used for inserting style sheet in HTML file? – **<Style>**
3) Which style type can apply directly into HTML tag? – **Inline style**
4) Which symbol is used to create Id selector? – **'#'**
5) Which symbol is used to create Class selector? – **' . ' (dot)**
6) Which property is used to create bold text? – **Font-weight**
7) Which property is used to define first character capital of all text of paragraph? –**Text-transform**
8) Which value is used to create first character capital of each text of paragraph? – **Capitalize**
9) Which value is the default value in background-repeat property? – **repeat**
10) Which value is used to repeat image vertically in CSS? – **repeat-y**
11) Which value is the default in background-attachment property in CSS? – **Scroll**
12) In which element we can apply the border-collapse property of CSS? – **Table**
13) Which values are used with position property in CSS? – **Static, fixed, Sticky**
14) Which property is used to change the stack order of overlapped element in CSS? – **Z-index**
15) Which property is used to remove the underline from hyperlink in CSS? – **Text-decoration**
16) Which tag is used to insert an external style sheet into HTML page? – Link
17) Which attributes are used in Link elements? – href, rel, type
18) Which extension is used in external style sheet file? – .CSS
19) Which property is used to set space between two characters in CSS? – Letter-Spacing
20) Which property is used to set space between two lines of paragraphs? – Line-height
21) How many values are available in border-style property of CSS? – 10
22) Which property is used to set roundness in table or division? – border-radius
23) Which value is used to set list numbering like 01, 02, …, 09 in list-style-type? – Decimal-leading-zero
24) Which value is used with Scroll-behavior with internal link in CSS? – Auto & Smooth
25) Which CSS property is used with grayscale value in Image? – Filter
26) Which value is default in overflow property of CSS? – Visible
27) Which attribute is used to make element transparent in CSS? – Opacity

Atmiya University Rajkot

[TRUE / FALSE]

28) Using CSS we can set different four side padding in HTML element. – **TRUE**

29) Small-Caps is the value used in Text-transform property in CSS. – **FALSE**

30) Wavy is the value of Text-decoration-line property in CSS. – **FALSE**

31) Letter-spacing cannot be applied in heading tag. – **FALSE**

32) Text-transform is used to remove underline from hyperlink. – **FALSE**

Question Bank: (3 Marks Questions)

1) Explain style rule with its syntax.

Ans. Style rule and syntax

2) Explain CSS comments.

Ans. Comments explanation

3) Explain inline style.

Ans. Inline style explanation

4) Explain Font-size property.

Ans. Different font-size

5) Explain alignment in cell.

Ans. Text-align & Vertical-align

6) Explain text-indent and text-shadow.

Ans. Text-indent and text-shadow with an example

7) Explain border-style property.

Ans. Ten types of border style

8) Explain border-radius.

Ans. Border-radius with an example

9) Explain background-repeat.

Ans. Explanation of background repeat

10) Explain background-attachment.

Ans. Background-attachment with an example

Atmiya University Rajkot

11) What is List-Style-Image?

Ans. List-style-image with example

12) Explain Scroll-behavior in link.

Ans. Scroll-behavior property and value

13) Explain any three value of filter property in image.

Ans. Three value using filter property

14) Explain drop-shadow in image.

Ans. Drop-shadow with four values

15) Explain z-index property (Overlapping element).

Ans. Z-index with an example

16) Explain overflow.

Ans. Overflow property with four values

17) Explain Opacity.

Ans. Opacity with an example

18) What is focus with input.

Ans. Focus with example

19) What is resize with textarea.

Ans. Resize with an example

Atmiya University Rajkot

Question Bank: (5 Marks Questions)

1) What is CSS? Explain types of Style Sheet.

Ans. What is CSS? – 1 mark
Three types of CSS – 4 marks

2) What is CSS? Explain types of selectors.

Ans. What is CSS? – 2 marks
Types of selectors – 3 marks

3) Write CSS Font properties in detail.

Ans. 5 types of font property – 5 marks

4) Write CSS Text properties in detail.

Ans. 6 types of text property – 5 marks

5) Explain text-decoration properties in detail.

Ans. 5 types of text-decoration properties – 5 marks

6) Explain Spacing properties in detail.

Ans. 3 types of Spacing properties – 5 marks

7) Explain CSS Border properties in brief.

Ans. Five Border properties – 5 marks
Border-Width
Border-Style
Border-Color
Border-Radius
Border-Collapse

8) What is Border Collapse in table? Explain Border radius property with an example.

Ans. Border collapse in table – 1 mark
Different border radius property with an example – 4 marks

9) Explain Margin property with an example.

Ans. Explanation of Margin property. – 5 marks

10) Explain CSS background property in brief.

Ans. Any Five types of background properties – 5 marks

1. background-color property
2. background-image property
3. background-repeat property
4. background-size property
5. background-position property
6. background-attachment property

Atmiya University Rajkot

11) Explain Padding property with an example.

Ans. Explanation of Padding property. – 5 marks

12) Explain List-Style property with an example.

Ans. List-Style-Type - 2 Marks
List-Style-Image - 2 Marks
Example - 1 Mark

13) Explain Styling Links in CSS with an example.

Ans. Explanation of Styling Links? – 4 marks
Example – 1 mark

14) What is Bookmark? Explain scroll-behavior properties with an example.

Ans. What is bookmark? – 2 marks
Scroll-behavior properties - 2 marks
Example – 1 Mark

15) Explain filter property with any five values.

Ans. Filter property with five values explanation – 5 marks

16) Explain element positioning in CSS. Describe Overlapping elements in CSS.

Ans. Element positioning method – 3 marks
Overlapping elements – 2 marks

17) Explain multi-column properties in CSS.

Ans. 3 types of properties with an example – 5 marks

18) Explain overflow and opacity properties in CSS.

Ans. Overflow with an example – 3 marks
Opacity properties with an example – 2 marks

Atmiya University Rajkot

UNIT – 3
Responsive Website using Bootstrap

What is bootstrap?

Bootstrap is a popular open-source front-end framework used for developing responsive and mobile-first websites. It provides a collection of CSS and JavaScript components that help create consistent and modern-looking web designs quickly and efficiently.

It is designed to be compatible with all modern browsers, making it easier to develop cross-browser-compatible web applications.

What is responsive?

"Responsive" describes Bootstrap's ability to create layouts that flexibly adapt to different screen sizes and devices, such as desktops, tablets, and mobile phones. It achieves this by utilizing a responsive grid system, utility classes, and components that automatically adjust their dimensions and appearance according to the viewport size.

By using bootstrap classes, developers can create responsive layouts that:

- Adjust column widths
- Hide or show elements
- Change text sizes and line heights
- Modify spacing and padding

Why Use Bootstrap?

- Easy to use:
  Anybody with just basic knowledge of HTML and CSS can start using Bootstrap.
- Responsive features:
  Bootstrap's responsive CSS adjusts to phones, tablets, and desktops.
- Mobile-first approach:
  In Bootstrap, mobile-first styles are part of the core framework.
- Browser compatibility:
  Bootstrap 5 is compatible with all modern browsers (Chrome, Firefox, Edge, Safari, and Opera).

Atmiya University Rajkot

How to use Bootstrap?

Using Bootstrap is a great way to quickly design and develop responsive web applications. Here's a step-by-step guide to get you started:

Include Bootstrap in Your Project from following way.

Option 1: Use a CDN (Content Delivery Network)
Copy the CDN link from the official website and add links to the <head> section of your HTML file:

Option 2: Download Bootstrap file
Download Bootstrap from the official website.
Extract the files and include the CSS and JS files in your project.

What is a Container?

Containers are a fundamental building block of Bootstrap that contain padding and align your content within a given device or viewport.

How it works?

Containers are the most basic layout element in Bootstrap and are required when using our default grid system. Containers are used to contain padding and (sometimes) center the content within them. While containers can be nested, most layouts do not require a nested container. There are two container classes available.

- Container
- Container-fluid

1) **Container:**
Our default .container class is a responsive, fixed-width container, meaning its max-width changes at each breakpoint.

Breakpoint:

Breakpoints are customizable widths that determine how your responsive layout behaves across device or viewport sizes in Bootstrap.

Breakpoints are the building blocks of responsive design. Use them to control when your layout can be adapted at a particular viewport or device size.

Bootstrap's CSS aims to apply the bare minimum of styles to make a layout work at the smallest breakpoint, and then layers on styles to adjust that design for larger devices.

Bootstrap includes six default breakpoints, sometimes referred to as grid tiers, for building responsively.

Saurashtra University Rajkot

Class	DIFFERENT Dimensions of VIEWPORT					
	Extra small <576px	Small ≥576px	Medium ≥768px	Large ≥992px	Extra Large ≥1200px	XXL ≥1400px
.container-sm	100%	540px	720px	960px	1140px	1320px
.container-md	100%	100%	720px	960px	1140px	1320px
.container-lg	100%	100%	100%	960px	1140px	1320px
.container-xl	100%	100%	100%	100%	1140px	1320px
.container-xxl	100%	100%	100%	100%	100%	1320px
.container-fluid	100%	100%	100%	100%	100%	100%

Responsive containers allow you to specify a class that is 100% wide until the specified breakpoint is reached, after which we apply maximum width for each of the higher breakpoints.

2) **Container-fluid:**
Use of container-fluid is a class that creates a full-width container, spanning the entire width of the viewport. This class ensures that the container will always take up 100% of the available width.

It adapts to different screen sizes but maintains a full-width layout, making it ideal for use in responsive designs.

Typically used when you want content to cover the entire width of the screen, such as in backgrounds, headers, or footers.

Bootstrap Grid system:

The grid system in Bootstrap is a powerful and flexible layout tool that helps you create responsive, organized, and structured layouts for your web pages.

The Bootstrap grid system is a fundamental component of the Bootstrap framework that enables developers to create flexible and mobile-first layouts. It's a powerful tool for building adaptable user interfaces.

It is built with flexbox and allows up to 12 columns across the page.

If you do not want to use all 12 columns individually, you can group the columns together to create wider columns:

Atmiya University Rajkot

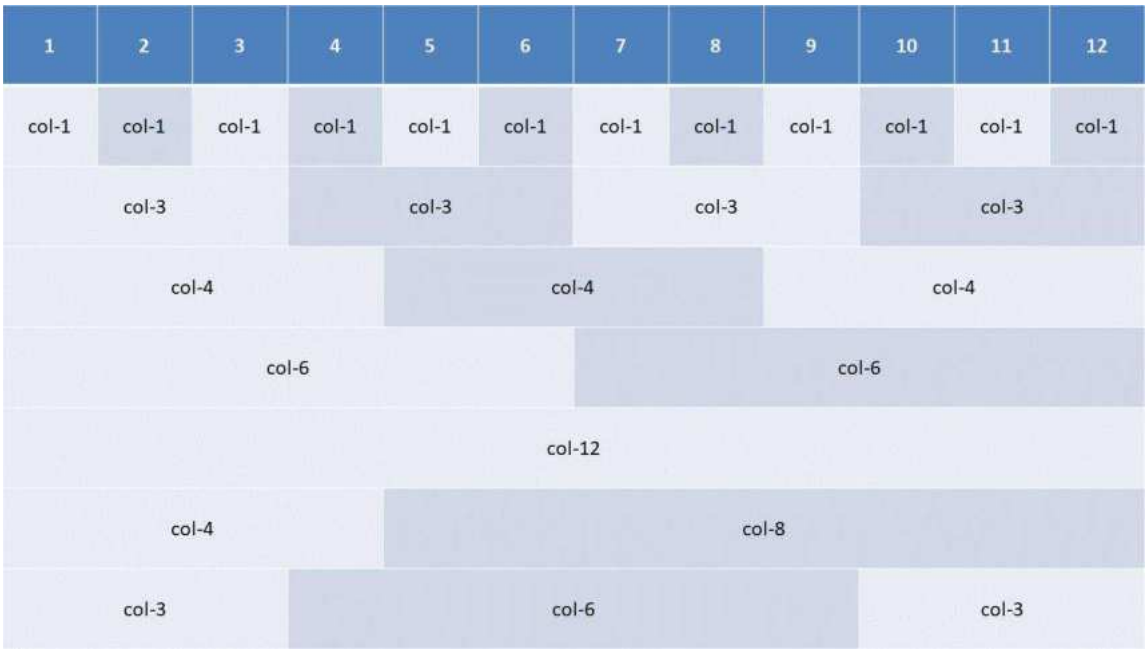

Key Components:

- Rows: This class is used to create horizontal containers that hold columns.
- Columns: This class is used to create vertical elements that contain content.
- Containers: Wrap rows and columns, providing padding and margins.

Typography

Fs-1 to Fs-5 – Class for Font size

In Bootstrap 5, font sizes can be controlled using utility classes. Bootstrap provides predefined font-size classes that can be applied to elements for responsive typography. Here are the font-size classes in Bootstrap 5.

Predefined Font Size Classes

- .fs-1: Largest font size
- .fs-2: Second largest font size
- .fs-3: Third largest font size
- .fs-4: Fourth largest font size
- .fs-5: Fifth largest font size
- .fs-6: Smallest font size

➢ **Example:**

```
<p class="fs-1">Atmiya University, Rajkot</p>
```

Atmiya University Rajkot

Lead - Class

The lead class in Bootstrap is used to style paragraphs with a larger font size, making them stand out as introductory or prominent text. It is typically applied to the main paragraph on a page to draw attention and provide emphasis.

- **Example:**

```
<div class="lead">
        <p> Paragraph </p>
</div>
```

Text Alignment

In Bootstrap, text alignment is managed using classes that allow you to align text quickly and easily without writing custom CSS. You can align text to the left, right or center it. Bootstrap also provides responsive text alignment classes, enabling different alignments for various screen sizes.

- text-start : This class allow text to align at left side of area.
- text-center : This class allow text to align at center place.
- text-end : This class allow text to align at right side of area.

Text-transform in Bootstrap

In Bootstrap 5, the text-transform utility classes are used to control the capitalization of text. These classes allow you to easily apply text transformation styles like uppercase, lowercase, or capitalize to text elements.

- Text-lowercase: This class converts the text to lowercase.
- Text-uppercase: This class converts the text to uppercase.
- Text-capitalize: This class converts capitalizes the first letter of each word.

Text-color in bootstrap

In Bootstrap 5, you can easily apply predefined text colors using the text color utility classes. These classes are based on Bootstrap's color palette, which includes options for primary, secondary, success, danger, warning, info, light, dark, white and body. These classes provide a quick way to apply text colors using Bootstrap's design system.

- **Example:**

```
<p class="text-info">Atmiya University, Rajkot</p>
```

Atmiya University Rajkot

Bootstrap Spacing Class

Margin:

In Bootstrap, margins are managed using utility classes that simplify spacing control. These utility classes allow developers to quickly add margins to elements without writing custom CSS.

- **Syntax.:**

  m[side] – [breakpoint] – [size]

Here, “m” refers to margin. “side” refers to various sides like t (top), b (bottom), s (left) and e (right). “Breakpoint” refers to various breakpoint(optional) like sm, md, lg, xl, xxl. “Size” refers to value like 0 to 5.

- **Example:**

```
<div class=“mt-sm-3”>
    <p>Atmiya Universit</p>
</div>
```

MX class	:	This class allows spacing only on left and right both sides of the content. MX-auto will allow spacing both sides of the content equally.
MY class	:	This class allows spacing only at top and bottom both sides of the content.

Padding:

In Bootstrap, padding is managed using utility classes similar to how margins are handled. Padding controls the inner spacing of an element, meaning it adds space inside the element's border, between the content and the border itself. Bootstrap provides utility classes to add padding to different sides of an element and for different screen sizes.

- **Syntax.:**

  P[side] – [breakpoint] – [size]

Bootstrap allows you to adjust padding based on screen size, ensuring that your layout remains responsive across different devices.

- **Example:**

```
<div class=“p-4 p-md-2”>
    <p>Atmiya University</p>
</div>
```

Atmiya University Rajkot

Border

In Bootstrap 5, the border utilities allow you to easily add or modify borders on elements. You can control the border's presence, color, width, and radius using various classes.

1. Add Border

To add borders to an element, use the following classes:

- .border: Adds a border to all sides of the element.
- .border-top: Adds a border to the top only.
- .border-bottom: Adds a border to the bottom only.
- .border-start: Adds a border to the left side.
- .border-end: Adds a border to the right side.

2. Border Width

To control the border width, use the .border-[width] utility, where {width} can be:

- 0 - Removes the border.
- 1, 2, 3, 4, 5 - Sets the border width.

3. Border Color

You can apply Bootstrap's color classes to borders using the .border-{color} utility. Bootstrap supports the standard color palette (primary, secondary, success, danger, etc.).

4. Border Radius

You can also round the corners of elements using the **rounded** class or specific border-radius utilities:

- .rounded: Applies a small border-radius to all corners.
- .rounded-0: Removes the border-radius (square corners).
- .rounded-[size] : it set the roundness to the object's corner as per size. Size could be 1 to 5.
- .rounded-[side] : it is used to set roundness at particular side, for example top, bottom, start (left) and end (right).
- .rounded-circle: Makes the element circular.
- .rounded-pill: Makes the element a pill shape (fully rounded on the sides).

These utilities make it easy to manage borders in Bootstrap without writing custom CSS.

Atmiya University Rajkot

Image

1. Responsive Images

To make an image responsive (i.e., scale appropriately to the size of its parent container), you can use the .img-fluid class.

This applies max-width: 100% and height: auto, ensuring the image scales according to its container.

2. Image Shapes

Bootstrap provides classes to give images of different shapes, including rounded corners, circles, and pill-shaped borders.

- .rounded: Adds rounded corners to the image.
- .rounded-circle: Makes the image circular (useful for profile pictures).
- .rounded-pill: Gives the image pill-shaped (fully rounded on the sides).

3. Thumbnail Image

To give an image the appearance of a thumbnail, use the .img-thumbnail class. This adds a small border and some padding around the image.

4. Aligning Images

Bootstrap also provides classes to align images left, right or center.

Image alignment:

- .float-start: Floats the image to the left.
- .float-end: Floats the image to the right.
- .mx-auto d-block: Centers the image.

5. Image Width and Height

If you want to manually set the width and height of an image using Bootstrap classes, you can use the width and height utility classes:

- .w-25, .w-50, .w-75, .w-100:

  Set width as a percentage of the parent element.

- .h-25, .h-50, .h-75, .h-100:

  Set height as a percentage of the parent element.

Atmiya University Rajkot

Shadow

In Bootstrap 5, shadows can be applied to elements using the predefined shadow utility classes. These classes help you add box-shadow effects to any element.

Shadow Classes

- .shadow-none: Removes any shadow (no shadow).
- .shadow-sm: Adds a small shadow.
- .shadow: Adds a regular-sized shadow (default).
- .shadow-lg: Adds a larger shadow.

Table

In Bootstrap, tables can be styled with various utility classes that enhance their appearance and functionality. These classes can help you create responsive, striped, bordered, and hoverable tables, among other options.

1. Basic Table

To style a basic HTML table, apply the **table** class. This one formats the table with full width and horizontal bottom border at each row.

2. Borderless Table

Sometime page design does not require any border in our table, at that time the table-borderless class removes borders from the table.

3. Striped Table

The table-striped class adds zebra-stripes to the table. To create stripes with alternating row colors, add the table-striped class, which format horizontally striped. While table-striped-column class format with differ colors in alternating columns.

4. Bordered Table

The table-bordered class adds borders on all sides of the table and cells.

5. Hover effect in Row

To highlight rows when hover the mouse cursor over, use the table-hover class.

6. Table background color

Bootstrap provides contextual classes to apply different background colors to rows or individual cells. For that use table-[color] class in table elements.

Atmiya University Rajkot

7. Responsive Table

The table-responsive class adds a scrollbar to the table when needed (when it is too big horizontally). To make a table responsive, write it in an outer container. This will make the table scroll horizontally on smaller screens.

Button

In Bootstrap, buttons can be styled and customized using a variety of predefined classes. Bootstrap provides a range of button styles, sizes, and states, as well as additional utilities for alignment and behavior.

1. Basic Button Styles

Bootstrap offers different types of buttons using the **btn** class combined with contextual classes to define the button's appearance.

- **Example:**

```
<span class="btn btn-info">Submit</span>
```

2. Button Sizes

Bootstrap buttons come in several sizes, which can be applied using these classes:

- .btn-lg: Large button.
- .btn-sm: Small button.

- **Example:**

```
<span class="btn btn-sm">Small</span>
<span class="btn btn-lg">Laege</span>
```

3. Outline Buttons

Bootstrap provides "outline" buttons, which have transparent backgrounds with colored borders. These can be created using the **btn-outline-[color]** classes.

- **Example:**

```
<span class="btn btn-outline-info">Outline Button</span>
```

4. Button Groups

You can group multiple buttons together using **btn-group**. This helps in creating toolbars or button sets. As well as can create vertical groups of button sets.

- **Example:**

(1)
```
<div class="btn-group">
        <span class="btn btn-success">Submit</span>
        <span class="btn btn-warning">Reset</span>
</div>
```

Atmiya University Rajkot

```
(2) <div class="btn-group-vertical">
        <span class="btn btn-success">Submit</span>
        <span class="btn btn-warning">Reset</span>
    </div>
```

5. Buttons as a Links

You can use Bootstrap button classes on <a> tags to create clickable buttons that behave like links.

➢ **Example:**

```
<a href="#" class="btn btn-primary">Atmiya University</a>
```

Form Input

In Bootstrap 5, form inputs are styled using a variety of classes that ensure consistency and a clean, modern design. Bootstrap provides numerous utilities for different types of input elements such as text fields, checkboxes, radios, file inputs, and more.

1. Basic Text Input

To create a basic text input style in bootstrap, use the form-control class.

2. Input Sizing

Form-control displayed default and medium size of control, while form-control-lg represents large size input and form-control-sm displayed small size control in form.

- **.form-control-lg: Large input.**
- **.form-control-sm: Small input.**

3. Input Groups

Input groups enable you to add elements (such as text or icons) before or after input fields. It groups with label and control together in form. For that class input-group and input-group-text can applied in control.

➢ **Example:**

```
<div class="input-group">
    <span class="input-group-text">Enter Name</span>
    <input class="form-control">
</div>
```

4. Floating Labels

You can add floating labels to inputs by wrapping the input and label in a form-floating container.

Atmiya University Rajkot

- **Example:**

```
<div class="form-floating">
    <input class="form-control" placeholder="">
    <label>First Name</label>
</div>
```

Checkboxes and Radios

Bootstrap offers styling for checkboxes and radio buttons using the form-check-input class. Which is applicable only on radio or checkboxes.

Form-switch

In Bootstrap, the form-switch is a styled alternative to a checkbox, resembling a toggle switch. You can create it using the form-check, form-switch, and form-check-input classes.

Select Dropdown

Bootstrap provides styling for <select> elements using the form-select class.

- **Example:**

```
<select class=form-select>
    <option>Programming in C-Language</option>
    <option>Web Scripting Language</option>
    <option>Computer Fundamental</option>
</select>
```

Atmiya University Rajkot

Question Bank: (1 Mark Questions)

1) Stand by: CDN - Content Delivery Network
2) What is the smallest font size class in bootstrap? - fs-6
3) What is the smallest font size class in bootstrap? - fs-1
4) What is the range of font size class in bootstrap? - fs-1 to fs-6
5) Which class is used to make the image pill shape in bootstrap? - rounded-pill
6) Which class is used to add border at right side in bootstrap? - border-end
7) Which class is used to add margin at both left and right sides? - mx-[size]
8) Which class is used to add padding at both top and bottom sides? - py-[size]
9) How many maximum numbers of columns can be arranged in a row of Bootstrap? - 12
10) Which is the most useful and basic class to create grid system in bootstrap? - container

Question Bank: (3 Marks Questions)

1) What is Bootstrap? How do you use bootstrap?
   Ans.: Bootstrap explanation
   How to use

2) What is responsive?
   Ans.: Describe responsive

3) Describe grid system in Bootstrap.
   Ans.: Description
   Key component

4) Explain shadow effect in bootstrap.
   Ans.: Shadow classes

5) Explain any three table classes.
   Ans.: Any three classes

6) Explain any two classes of image with an example
   Ans.: Any two classes of image
   Example

Atmiya University Rajkot

7) Explain border radius in bootstrap.
   Ans.: border radius classes

8) Explain margin with an example.
   Ans.: Explanation and classes of margin

9) Explain padding with an example.
   Ans.: Explanation and classes of padding

Question Bank: (5 Marks Questions)

1) What is Container?
   Ans.: How container works
   Container
   Breakpoint
   Container-fluid

2) Explain typography classes.
   Ans.: Different classes

3) Explain spacing class from bootstrap.
   Ans.: Margin
   Padding

4) Explain bootstrap border class.
   Ans.: Border class explanation

5) Describe the image class in bootstrap.
   Ans.: Different image classes

6) Explain the bootstrap table effect.
   Ans.: Table classes

7) Describe different classes of button and its effect.
   Ans.: Description of button classes

8) Describe form input with bootstrap classes.
   Ans.: Different controls and their classes

Atmiya University Rajkot

UNIT – 4
Introduction to JavaScript

What is JavaScript?

JavaScript was designed to add interactivity to HTML pages. JavaScript is a client-side scripting language. A scripting language is a lightweight programming language. JavaScript is usually embedded directly into HTML pages. JavaScript is an interpreted language (means that scripts. execute without preliminary compilation). Everyone can use JavaScript without purchasing a license. i.e. It's open source.

Client-Side JavaScript:

It supplies objects to control browser.
For e.g. It allows applications to place elements on HTML form and give response to user events such as mouse clicks, form inputs and page navigation etc.

Server-Side JavaScript:

It supplies objects relevant to running JavaScript on the server. For e.g. It allows application Relational Database (RDB), providing information from one page to another page.

How to insert JavaScript into page?

To insert a JavaScript into an HTML page, we use the <script> tag. Inside the <script> tag we use the type of attribute to define the scripting language.

Where to put JavaScript?

1) You can add JavaScript in <Head> section
2) You can add JavaScript in <Body>section
3) You can add JavaScript in both <Head> and <Body> section

NOTE: You can also add External JavaScript File having extension ".js".

1) JavaScript in <Head> Section.

Scripts to be executed when they are called, or when an event is triggered, go in the head section. Scripts in the head section will be executed immediately while page loads into browser. If you place a script in the head section, you will ensure that the script is loaded before anyone uses it.

Atmiya University Rajkot

❖ **Example:**

```
<html>
        <head>
                <script type="text/JavaScript">
                        function message()
                        {
                                alert("ATMIYA Univeristy");
                        }
                </script>
        </head>
        <body onload="message()">
        </body>
</html>
```

2) JavaScript in <Body> Section.

Scripts are to be executed when the page loads go in the body section. If you place a script in the body section, it generates the content of a page.

❖ **Example:**

```
<html>
        <head>
        </head>
        <body>
                <script type="text/JavaScript">
                        document.write("This message is written by JavaScript");
                </script>
        </body>
</html>
```

3) JavaScript in both <Head> and <Body>

You can place an unlimited number of scripts in your document, so you can have scripts in both the body and the head section.

❖ **Example:**

```
<html>
        <head>
                <script type="text/JavaScript">
                        ....
                </script>
        </head>
        <body>
                <script type="text/JavaScript">
                        ....
                </script>
        </body>
</html>
```

Atmiya University Rajkot

Comments in JavaScript:

The Unexcitable part of any program is known as "Comment". Comments are generally used to give instructions about the Program, and only useful for programmer. Comments can be added to explain the JavaScript, or to make the code more readable.

```
//This is a single line comment.
/* This is Multi
 line comments */
```

Some important things to know when scripting with JavaScript.

- ✓ **JavaScript is case sensitive:**
  A function named "myfunction" is not same as "myFunction" and a variable named "my Var" is not same as "myVar".

- ✓ **Symbols:**
  Opening symbols, like…
  ({ [" ' must always have a matching closing symbols, like ' "] })

- ✓ **White space:**
  JavaScript ignores extra spaces. You can add white space to your script to make it more readable. The following lines equivalent:
  Name="Atmiya"
  Name=" Atmiya"

- ✓ **Insert special characters:**
  You can also insert special characters like ("': &) with a backslash.
  - ❖ **Example:**
    document.write ("You \& I sing \"Happy Birthday\".");

  - **Output:**
    You & I sing "Happy Birthday".

Variables

- ✓ **What is variable?**
  A variable is a name given to the memory location. A variable is a "container" for information you want to store. During the execution of the program the value of the variable will be changed.

- ✓ **JavaScript Variables**
  JavaScript variables are used to hold values or expressions. A variable can have a short name like "x" or a more descriptive name like "car_name".

- ✓ **Rules for JavaScript variable names:**
  Variable names are case sensitive (y and Y are two different variables)
  Variable names must begin with a letter or the underscore character.

Atmiya University Rajkot

✓ Declaring (Creating) JavaScript Variables

You can create a variable with the "var" statement.

var variable-name = some value

❖ **Example:**

var x = 10 (now variable x holds value 10)

Data Types & Literals

The predefined identification of any variable is known as Data type. Or we can say that the data type defines the characteristics of variables. JavaScript can't support data types. But it supports Literals. Literals are used to represent values of variables of particular data type in JavaScript. These are fixed values not variables that you literally provide in your script.

✓ Integer Literals:

Integer Literals can be expressed as Whole Numbers without any decimal points. It can be positive or negative numbers.

❖ **Example:**

```
var a = 112;
var b = - 44;
```

✓ Floating Point Literals:

Floating Point Literals can be expressed as numbers with decimal points. It can be positive or negative number.

❖ **Example:**

```
var a = 1.23;
var b = -4.9
```

✓ Boolean Literals:

Boolean Literals can be expressed as only with two values i.e. TRUE or FALSE. You can just assign true or false values, it will automatically take 0 as true value and 1 as false value.

❖ **Example:**

```
var a = true;
var b = false;
```

✓ String Literals:

String Literals can be expressed as a sequence of characters. It always enclose with either single quote(') or double quotes(").

❖ **Example:**

```
var str1 = "Wel-Come"
var str2 = 'Atmiya'
```

✓ Array Literals:

Array Literals can be expressed as a list of values that are called elements of Array. The values may be numbers, strings or any type of Literal.

Atmiya University Rajkot

❖ **Example:**

```
var arr = new Array(3)
arr[0] = "One"
arr[1] = "Two"
arr[2] = "Three"
```

✓ **Object Literals:**

Object Literals can be expressed as a list of pairs of property names and associated values of an Object enclosed in { }.
NOTE: It is just a User Defined Object which is shown later.

✓ **NULL Literals:**

Null Literal consists of single value, which identifies a NULL i.e. empty. It is used to set initial value of variable that is different from other valid values.

❖ **Example:**

- var temp = null;
- document. write("Value of temp is :"+temp);

Dialog Boxes

"Dialog Box" is nothing but a small separate window that contents provided by end user. In JavaScript, Dialog Boxes are very useful because they allow the script to interact with visitors where the visitor must provide a response to Dialog Box before script can continue processing. All Dialog Boxes in JavaScript are Modal Dialog Boxes and don't permit anything else to happen until Dialog Box receives a response from the user. JavaScript provides the ability to get user input or display small amounts of text to the user by using Dialog Boxes.

There are three types of Dialog Boxes provided by JavaScript:

1) Alert Dialog Box.
2) Confirm Dialog Box.
3) Prompt Dialog Box.

1. ALERT Dialog Box:

Alert Dialog Box is use to display some information on web browser window. Alert Dialog Box is used to give warning messages to end users. The alert Dialog Box displays string passed to the alert () method as well as OK button. The JavaScript and HTML, in which this code is held, will not continue processing until OK button pressed.

Use of Alert dialog box:

✓ A message to display when a user inputs invalid information.
✓ An invalid result from Calculation.
✓ A warning that a service is not available.

⇨ **Syntax:**

```
alert("message");
```

Atmiya University Rajkot

❖ **Example:**

```
<html>
<body>
        <script language="JavaScript">
                var a=5,b=7
                var c = a+b;
                alert("A + B : "+c);
        </script>
</body>
</html>
```

Output:

2. CONFIRM Dialog Box:

A Confirm Dialog Box is often used if we want the user to verify or accept something. A Confirm Dialog Box displays predefined message with OK and CANCEL button. When a confirm Dialog Box pop up, the user will have to click either OK or CANCEL to proceed. If you press the OK button, then it will return TRUE if you press CANCEL button then it will return FALSE.

Use of Confirm dialog box:

A message will display when we want any confirmation from the end user.

⇨ **Syntax:**

```
confirm ("Message");
```

❖ **Example:**

```
<html>
        <body>
                <script language="JavaScript">
                        confirm("Would you like to close this file?");
                </script>
        </body>
</html>
```

Atmiya University Rajkot

Output:

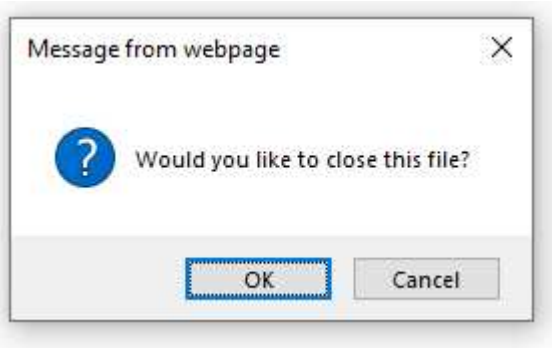

3. PROMPT Dialog Box:

When you want to get the value from user at that time, the prompt dialog box is used. Prompt dialog box will display with a pre-defined message, a text box for user input and with two command buttons.(OK,CANCEL). When a prompt dialog box pops up, the user will have to click either OK or CANCEL button to proceed after entering input value. If the user clicks OK, then the value that user entered will stored inside the variable. If the user clicks CANCEL, "NULL" will stored inside the variable.

Use of Prompt dialog box:
In online games, ask for end user to enter name.

Syntax:

```
var name=prompt("Message","default value");
```

Example:

```
<html>
    <body>
     <script language="JavaScript">
            nm=prompt("Enter your name here :","")
       </script>
    </body>
</html>
```

Output:

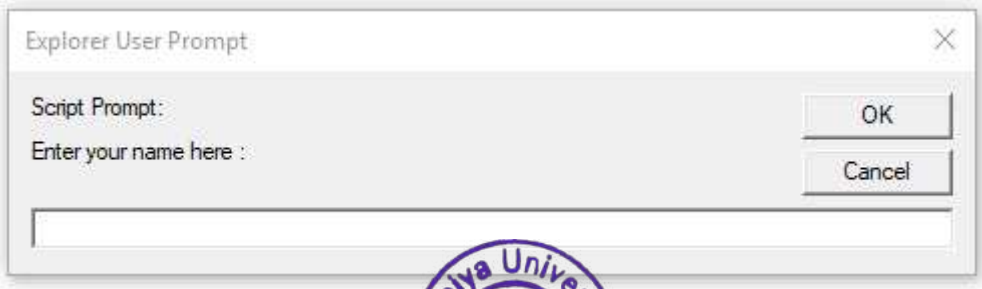

Atmiya University Rajkot

Decision Statements

Sometimes when you write code, you want to perform different actions for different decisions, at that time you can use conditional statements in your code. JavaScript provides a complete range of basic programming constructs. They are as given below:

If statement	Use this statement if you want to execute some code only if a specified condition is true.
If …else statement	Use this statement if you want to execute some code if the true and another code if the condition is false.
If…else if…else statement	Use this statement if you want to select one or many blocks of code to be executed.
Switch statement	Use this statement if you want to select one of many blocks of code to be executed.

If statement:

You can use the if statement if you want to execute some code only when the condition is true. The block of statements is executed only when the specified condition is true.

⇨ **Syntax:**

```
if (Condition)
{
        Block of statements
}
```

If the condition is evaluated to true than the block of statements will be executed, then control will transfer out of block. If the condition is evaluated to false than the block of code will be skipped and the control will transfer out of block by skipping the block of statements.

❖ **Example:**

```
<script language="JavaScript">
        var a=10,b=20;
        if(a>b)
        {
                document.write("A is big");
        }
</script>
```

If… else statement:

The 'if else' construct is an extension of simple if statement. If…else construct is used to execute some code when the condition is true or false. You can handle the true block or false block with the help of if… else construct.

Atmiya University Rajkot

⇨ **Syntax:**

```
if(condition)
{
        Code for true part
}
else
{
        Code for false part
}
```

If the condition is evaluated to true then the code for true block will be executed. If the condition is evaluated to false then by skipping the true block the control will transfer in else part and the code for false block will be executed.

❖ **Example:**

```
<script language="JavaScript">
        var a=20,b=10;
        if (a>b)
        {
                document.write("A is Big");
        }
        else
        {
                document.write("B is Big");
        }
</script>
```

if…else if…else statement:

You can use the if…else if…else statement if you want to select one of many sets of lines to execute. This structure gives you facility to specify the condition with each else statement.

⇨ **Syntax:**

```
if(condition1)
{
        code for block 1
}
else if (condition 2)
{
        code for block 2
}
else
{
        code to be executed if both conditions are not true.
}
```

Atmiya University Rajkot

In this structure condition 1 will be evaluated first, if condition 1 is evaluated to be true then the code for block 1 will be executed. If condition 1 is evaluated to true, then and then the control proceeds to condition 2. As soon as the true condition is found then the respected block of code will be executed and then control will go out of the whole if…else if…else block. If all the conditions are evaluated to be false, then the final else block will be executed.

Switch statement

You should use the switch statement if you want to select one of many blocks of code to be executed. First, we have a single expression that is evaluated once. The value of the expression is then compared with the values for each case in the structure. If there is a match, the block of code associated with that case is executed. Use break to prevent the code from running into the next case automatically. If the expression is not match with any case then default block is executed.

⇨ **Syntax:**

```
switch(n)
{
    case 1:
        Code block 1
        break;
    case 2:
        Code block 2
        break;
    default:
        Code to be executed if n is different from case 1 & 2.
}
```

❖ **Example:**

```
<script language="JavaScript">
    switch(ch)
    {
        case '1':
            c=a+b;
            document.write("Addition is"+c);
            break;
        case '2':
            c=a-b;
            document.write("Subtraction is"+c);
            break;
        case '3':
            c=a*b;
            document.write("Mulitplication is"+c);
            break;
        default:
            document.write("Invalid choice");
    }
</script>
```

Atmiya University Rajkot

Looping Structure in Java script:

What is Loop?

When you want to perform a particular task no. of times at that time the concepts of loop is used. JavaScript supports 3 types of looping structure they are as given below:

1) While()
2) Do…while()
3) For()

1) While () Statement:

The while() statement is the simplest one from all among the looping structure. The while statement is used to execute the statements when the condition is evaluated to true. This is also known as an "Entry Controlled Looping Statement" because the condition is evaluated first and if the condition is evaluated to true then & then the body of the loop will be executed.

⇨ **Syntax:**

```
while (Condition)
{
        Body of the Loop
}
```

❖ **Example:**

```
<script language="JavaScript">
        var x=1;
        while(x<=10)
        {
                document.write("<br>"+x);
                x++ ;
        }
</script>
```

2) Do…while() statement:

The do…while() statement is used to execute the statements no. of times as same as while() statement. But the difference is that the location of condition. This is the reason that's why it is called "Exit control Loop statement".

⇨ **Syntax:**

```
do
{
        Body of the Loop
}while (Condition);
```

Atmiya University Rajkot

❖ **Example:**

```
<script language="JavaScript">
        var x=1;
        do
        {
                document.write("<br>"+x);
                x+= 2;
        }while(x<=20);
</script>
```

3) For() statement:

The for() statement is another "Entry Controlled Loop" statement. It is used when you know in advanced how many times you want to iterate the loop. It allows to specify intitialization, testing and increment/decrement, just within a single line of statement.

⇨ **Syntax:**

```
for (initialization;condition;incre/decre )
{
        body of the loop
}
```

❖ **Example:**

```
<script language="JavaScript">
        for(i=0 ; i<=5 ; i++)
        {
                document.write("Atmiya <br>")
        }
</script>
```

Array in Java script:

An Array is an ordered set of values that we refers with its name and index. JavaScript does not have any explicit array data type. However, we can use the predefined Array Object and its methods to work with arrays in our application. The array object has so many methods for manipulating arrays in various ways. The array object is used to store set of values in single variable name. The array Literals are also Array Object.

Creating an Array:

We can create array objects in either of three ways:

⇨ **Syntax:**

1) arrayObjectName = new Array()
2) arrayObjectName = new Array(arrayLength)
3) arrayObjectName = new Array(Element0, Element1,..,Element N)

arrayObjectName : It is either the name of a new Object or existing Object.
arrayLength : It is an initial length of array.
Element 0, Element 1 : It is a list of values for array elements.

Atmiya University Rajkot

❖ **Example:**

```
var emp = new Array()
emp[0] = "Atmiya"
emp[1] = "Virani"
document.write("<br>First Employee Name : "+emp[0])
document.write("<br>Second Employee Name : "+emp[1])
document.write("<br>Third Employee Name : "+emp[2])
```

Output:

```
Atmiya
Virani
Undefine
```

✓ **Populating an Array:**

We can populate an array by assigning values to its elements. The values which we can assign to its elements may be string and numbers.

❖ **Example:**

```
var myArray = new Array("AAA",12,"bbb");
```

✓ **Accessing an Array:**

We can refer to a particular element in an array by referring to the name of array and index number.

User Define Functions in Java Script:

What is Function?

"Function" is self-containing block of statements that perform a particular task. Function provides the ability to combine no. of statements in single unit. JavaScript provides Functions through which you can perform certain tasks. JavaScript allows users to create our own Functions, are called "User Defined Functions". User Defined Function first needs to be declared after that function can be invoked by calling it using its name when it was declared. The data needed to execute a function is passed as a Parameter.

⇨ **Syntax:**

```
function function-name(parameter list)
{
        block of statements
        [return statement]
}
```

- Functions are declared and created using "**function"** keyword.
- "**Function-name**" is the appropriate name of the function.
- **parameter-list**" are optional and passed to the function appears in parentheses and commas separate member of list.
- "**return**" statement can be used to return any valid expression that evaluates a single value.

Atmiya University Rajkot

❖ **Example:**

```
<html>
  <head>
      <script language="javacript">
            function displayMsg( )
            {
                  alert("Welcom to ATMIYA University");
            }
      </script>
  </head>
  <body>
       <script language="JavaScript">
            displayMsg()
       </script>
  </body>
</html>
```

✓ **Note:** A function code will be executed only by …
When user fires any event.
When a call to that function (anywhere within a page).

Scope of Variables in Functions:

The variable declared or assigned outside the function, is called "Global variable".
The variable declared or assigned inside the function, is called "Local variable".

❖ **Example:**

```
<script language="JavaScript">
      var x = 10;      // global variable
      function scope()
      {
            var y = 20;  // local variable
            document.write(y);          // 20
            document.write(x);          // 10
      }
      document.write(y);                //undefined.
      document.write(x);                //10
</script>
```

Types Of Function

- Function Without Argument and Without Return Value
- Function With Arguments Without Return Value
- Function With Arguments With Return Value
- Function Without Arguments With Return Value

Atmiya University Rajkot

- **Function without argument and without return value**

```
<body>
    <script language="JavaScript">
        var name=""
        function hello()
        {
            name = prompt("Enter your name")
            alert("Welcome " + name)
        }
        function bye()
        {
            alert("Good bye " + name)
        }
        hello()
        bye()
    </script>
</body>
```

- **Function with arguments and without return value**

```
<body>
    <script language="JavaScript">
        var name=""
        function hello(name)
        {
            alert("Welcome " + name)
        }
        function bye(name)
        {
            alert("Good bye " + name)
        }
        hello("World")
        name="Friends"
        bye(name)
    </script>
</body>
```

- **Function with arguments with return value**

```
<script language="JavaScript">
    var name="";
    function hello(usrname)
    {
        return usrname+" Atmiya"
    }
    name=hello("Welcome")
    document.write(name)
</script>
```

Atmiya University Rajkot

✓ **Function without arguments with return**

```
<body>
        <script language="JavaScript">
                var name=""
                function hello()
                {
                        return "Atmiya";
                }
                name=hello()
                document.write(name)
        </script>
</body>
```

Built-in Functions

➢ **eval() :**

The eval() function evaluates a string without reference to a particular objects.

⇨ **Syntax:**

eval(string-expression)

❖ **Example:**

```
<script language="JavaScript">
    var no1 = prompt("Enter First Value");
    var no2 = prompt("Enter Second Value");
    sum = eval(no1) + eval(no2);
    document.write("Sum : "+sum);
</script>
```

➢ **parseInt():**

The parseInt() function parses a string and returns an integer.

⇨ **Syntax:**

parseInt(string)

❖ **Example:**

```
<script language="JavaScript">
    document.write(parseInt("15") + "<br>");
    document.write(parseInt("15.34") + "<br>");
    document.write(parseInt("25  35  45") + "<br>");
    document.write(parseInt(" 100 ") + "<br>");
    document.write(parseInt("30 years") + "<br>");
    document.write(parseInt("Hello") + "<br>");
    document.write(parseInt("015") + "<br>");
</script>
```

Atmiya University Rajkot

Output: 15
15
25
100
30
NaN
15

parseFloat():

The parseFloat() function parses a string and returns a floating point number. This function determines if the first character in the specified string is a number. If it is, it parses the string until it reaches the end of the number, and returns the number as a number, not as a string.

Syntax:

```
parseFloat(string);
```

Example:

```
<script type="text/JavaScript">
        document.write(parseFloat("15") + "<br>");
        document.write(parseFloat("15.46") + "<br>");
        document.write(parseFloat("35 45 55") + "<br>");
        document.write(parseFloat(" 100 ") + "<br>");
        document.write(parseFloat("30 years") + "<br>");
        document.write(parseFloat("Hello") + "<br>");
</script>
```

Output: 15
15.46
35
100
30
NaN

JavaScript Objects

What is the Object?

"Object" is just a special kind of data. Each Object has its own state and behavior. State of the Object refers to Property. Behavior of the Object refers to Methods.

- **Properties:**

  Properties are used to define the characteristics of an Object. Properties are used to access the data values present in the object.

  To access the property of an Object:

  objectName.propertyName

Atmiya University Rajkot

- **Methods:**
  Methods are the actions that can be performed on Objects. Object's behavior, we can change by using accessing their methods.

  To access the method of an Object:
  objectName.methodName

  JavaScript is an object-oriented scripting language. So JavaScript allows you to use with objects.

  Built-In Objects: JavaScript provides the following Built-In Objects.

  - String Object
  - Math Object
  - Array Object
  - Date Object

Built-In Objects:

➢ String Object:

This object is used to manipulate the String.

Property:

Length : Returns the no. of characters in a String.

Methods:

- bold()
- italics()
- strike()
- sup()
- sub()
- fontcolor()
- fontsize()
- link()
- charAt()
- concat()
- match()
- replace()
- search()
- slice()
- substr()
- substring()
- toLowercase()
- toUppercase()

Bold: This method is used to display a string in a bold font.

⇨ **Syntax:**

Stringobject.bold()

Italics: This method is used to display a string in italics font.

⇨ **Syntax:**

Stringobject.italics()

Big: This method is used to display a string in Big font.

⇨ **Syntax:**

Amiya University Rajkot

Stringobject.big()

- **Small:** This method is used to display a string in small font.
  - **Syntax:**

    Stringobject.small()

- **Sub:** This method is used to give subscript effect to the string.
  - **Syntax:**

    Stringobject.sub()

- **Sup:** This method is used to give superscript effect to the string
  - **Syntax:**

    Stringobject.sup()

- **Fontsize:** This method is used to specify the size of font.
  - **Syntax:**

    Stringobject.fontsize(size)

- **Fontcolor:** This method is used to specify the color of font.
  - **Syntax:**

    Stringobject.fontcolor(color)

- **Link:** This method is used to display a string as a hyperlink.
  - **Syntax:**

    Stringobject.link()

- **Strike:** This method is used to give strikethrough effects to the string.
  - **Syntax:**

    Stringobject.strike()

  - **Example of above String method:**

```
<script language=”JavaScript”>
        var x = "ATMIYA University";
        document.write("My String is: "+x);
        document.write("Bold: "+x.bold());
        document.write("Italics: "+x.italics());
        document.write("FontColor:"+x.fontcolor("red”));
        document.write("FontSize: "+x.fontsize(5));
        document.write("Link:"+x.link("AU.jpg") );
</script>
```

- **CharAt:** The charAt () method is used to find the character at specified position. This method is case sensitive.
  - **Syntax:**

    Stringobject.charAt(index)

  - **Example:**

```
var str=”My String”
document. write(charAt(3));
```

  - **Output:**

Atmiya University Rajkot

S

- **Concat:** This method is used to concat (merge) two or more strings.
  - **Syntax:**

    Stringobject.concat (stringX,stringX,……X)
  - **Example:**

    var st1="This is"
    var st2=" Computer"
    document.write(st1.concat(st2))
  - **Output**:

    This is computer

- **Match:** It searches for specified string value in a string. It is similar to indexOf() and lastIndexOf(), but returns specified string, instead of position of the string. It is case sensitive method. Returns null if no match found.
  - **Syntax:**

    stringObject.match(search value)
  - **Example:**

    var str="Have A Nice Day";
    document.write(str.match("Nice"))
    document.write(str.match("nice"))
  - **Output**:

    Nice
    Null

- **Replace:** The replace() method is used to replace some characters with some other characters in a string. The replace() method is case sensitive.
  - **Syntax:**

    stringObject.replace (findstring, newstring)
  - **Example:**

    var str="Play Cricket!";
    document.write (str.repalce ("Cricket","Chess"))
  - **Output**:

    Play Chess!

- **Search:** The search() method is used to search a string for specified value. The search() method returns the position of the specified value in the. If no match was found it returns -1. This method is case sensitive.
  - **Syntax:**

    StringObject.search(searchvalue)
  - **Example:**

    var str="Have a nice day"
    document.write (str.search ("day"))
  - **Output**:

    12

Atmiya University Rajkot

- **Slice:** The slice() method extracts a part of a string and returns the extracted part in a new string. You can use negative numbers to select from the end of the string. If the end is not specified, slice() selects all characters from the specified start position and to the end of the string.
  - **Syntax:**

    stringObject.slice(start,end)
  - **Example:**

    ```
    var str="Hello, How are you?"
    document.write(str.slice(7));
    document.write(str.slice(7,12));
    ```
  - **Output**:

    How are you?
    How a

- **Substr:** The substr() method extracts a specified number of characters in a string. To extracts from the end of the string, use a negative start number. The start index starts at 0. If the length parameter is omitted, this method extracts to the end of the string.
  - **Syntax:**

    stringObject.substr(start,length)
  - **Example:**

    ```
    var str="Good Morning";
    document.write(str.substr(3));
    document.write(str.substr(3,7));
    ```
  - **Output**:

    d Morning
    d Morni

- **Substring:** The substring () method extracts the characters in a string between two specified indices. To extract the character from the end of the string, use negative start number. The start index starts at 0. If the stop parameter is omitted, this method extracts to the end of the string.
  - **Syntax:**

    stringObject.substring(start,stop)
  - **Example:**

    ```
    var str="Hello world";
    document.write(str.substr(3))
    document.write(str.substr(7,3))
    ```
  - **Output**:

    lo world
    lo w

Atmiya University Rajkot

- **toLowerCase:** The toLowerCase() method is used to display a string in lowercase letters.
  - **Syntax:**

    stringObject.toLowerCase()
  - **Example:**

    var str="Hello World!"
  - **Output:**

    hello world!

- **toUpperCase:** The toUpperCase() method is used to display a string in up-percase letters.
  - **Syntax:**

    stringObject.toUpperCase()
  - **Example:**

    var str="Hello World!"
  - **Output:**

    HELLO WORLD!

STRING OBJECT PROPERTY:

- **length:** This property is used to count the length of the specified string.
  - **Syntax:**

    stringObject.length
  - **Example:**

    var str="Hello World";
  - **Output:**

    11

Math Object:

Math Object provides standard library of mathematical constants and functions. The "Constants" are defined as properties of Math Object. The "Functions" are defined as methods of Math Object.

Methods:

- **abs:** It returns absolute value of a number.
  - **Syntax:**

    Math.abs(number)
  - **Example:**

    document.write(Math.abs(-7.25));
    document.write(Math.abs(7.25));

- **ceil:** It returns value of number rounded UPWARDS to the nearest integer.
  - **Syntax:**

Atmiya University Rajkot

Math.ceil(number)

- **Example:**

```
document.write(Math.ceil(0.60))
document.write(Math.ceil(0.40))
document.write(Math.ceil(- 5.1))
document.write(Math.ceil(5.1))
```

- **floor:** It returns the value of number rounded DOWNWARDS to the nearest integer.
  - **Syntax:**

    Math.floor(number)
  - **Example:**

```
document.write(Math. floor (0.40))
document.write(Math. floor (- 5.1))
document.write(Math. floor (5.1))
```

- **pow:** It returns the value of X to power of Y.
  - **Syntax:**

    Math.pow(x,y)
  - **Example:**

```
document.write(Math.pow(2,3));
document.write(Math.pow(5,2));
```

- **random:** It returns a random number between 0 to 1.
  - **Syntax:**

    Math.random()
  - **Example:**

```
document.write(Math.random());
```

- **max:** It returns the number with highest value of two specified numbers.
  - **Syntax:**

    Math.max(x,y)
  - **Example:**

```
document.write(Math.max(10,15));
```

- **min:** It returns the number with lowest value of two specified numbers.
  - **Syntax:**

    Math.min(x,y)
  - **Example:**

```
document.write(Math.min(10,15));
```

- **round:** It rounds the number to nearest integer.
  - **Syntax:**

    Math.round(number)
  - **Example:**

```
document.write(Math.round(0.60));
document.write(Math.round(0.49));
```

Atmiya University Rajkot

- **sqrt:** It returns the square root of a number.
  - **Syntax:**

```
Math.sqrt(number)
```

  - **Example:**

```
document.write(Math.sqrt(16));
```

Array Object

An array is the collection of elements having similar datatypes or we can say that array provides the facility to store multiple values in single variable names.

Property:

- **length:** It returns the length of the Array.
  - **Syntax:**

```
ArrayObject.length
```

  - **Example:**

```
<script languagae="javacript">
        var subArr = new Array()
        arr[0] = "PHP"
        arr[1] = "C"
        arr[2] = "CSS"
        document.write(subArr.length)
</script>
```

  - **Output:**

```
3
```

Methods:

- **concat():** It is used to join two or more Arrays. This method does not change the original arrays. It only returns a copy of joined arrays.
  - **Syntax:**

```
ArrayObject.concat()
```

  - **Example:**

```
<script languagae="javacript">
        var subArr = new Array()
        subArr[0] = "PHP"
        subArr[1] = "C"
        subArr [2] = "CSS"

        var moreArr = new Array()
        moreArr[0] = "Java"
        moreArr[1] = "Oracle"

        document.write(subArr.concat(moreArr))
        document.write(subArr.length)
</script>
```

  - **Output:**

```
PHP,C,CSS,Java,Oracle
3
```

Amiya University Rajkot

- **join():** It is used to put all the elements of array into string. The elements will be seprated by Seprator, comma(,) is default if you omitted the parameter.
  - **Syntax:**

```
ArrayObject.join(seprator)
```

  - **Example:**

```
<script languagae="javacript">
    Var subArr = new Array()
    arr[0] = "PHP"
    arr[1] = "C"
    arr[2] = "CSS"
    document.write(subArr.join(":"))
</script>
```

  - **Output:**

```
PHP:  C :CSS
```

- **pop():** It is used to remove and return "Last Element" of Array. This method changes the length of original Array.
  - **Syntax:**

```
ArrayObject.pop()
```

  - **Example:**

```
<script languagae="javacript">
    var subArr = new Array()
    arr[0] = "PHP"
    arr[1] = "C"
    arr[2] = "CSS"
    document.write(subArr.pop())
</script>
```

  - **Output:**

```
CSS
```

- **shift():** It is used to remove and return "First Element" of Array. This method changes the length of original Array.
  - **Syntax:**

```
ArrayObject.shift()
```

  - **Example:**

```
<script languagae="javacript">
    var subArr = new Array()
    arr[0] = "PHP"
    arr[1] = "C"
    arr[2] = "CSS"
    document.write(subArr.shift())
</script>
```

  - **Output:**

```
PHP
```

Atmiya University Rajkot

- **push():** It is used to add one or more elements to end of the Array and returns new length.
  - **Syntax:**

```
ArrayObject.push(newElement1,newElement2,…)
```

  - **Example:**

```
<script languagae="javacript">
    var subArr = new Array()
    arr[0] = "PHP"
    arr[1] = "C"
    arr[2] = "CSS"
    document.write(subArr.push("java"))
</script>
```

  - **Output:**

```
4
```

- **unshift():** It is used to add one or more elements to the beginning of the Array and returns new length.
  - **Syntax:**

```
ArrayObject.unshift(newElement1,newElement2,…)
```

  - **Example:**

```
<script languagae="javacript">
    var subArr = new Array()
    arr[0] = "PHP"
    arr[1] = "C"
    arr[2] = "CSS"
    document.write(subArr.unshift("oracle"))
</script>
```

  - **Output:**

```
4
```

- **reverse():** It is used to reverse the order of elements in Array. It changes the original Array.
  - **Syntax:**

```
ArrayObject.reverse()
```

  - **Example:**

```
<script languagae="javacript">
    var subArr = new Array()
    arr[0] = "PHP"
    arr[1] = "C"
    arr[2] = "CSS"
    document.write(subArr.reverse())
</script>
```

  - **Output:**

```
CSS,C,PHP
```

Atmiya University Rajkot

- **slice():** It is used to extract a section of an Arrya and returns a new Array.
  - **Syntax:**

```
ArrayObject.slice(start_index,end_index)
```

  - **Example:**

```
<script languagae="javacript">
        var subArr = new Array()
        arr[0] = "PHP"
        arr[1] = "C"
        arr[2] = "CSS"
        document.write(subArr.slice(0,1))
</script>
```

  - **Output:**

```
PHP
```

- **sort():** It is used to sort the elements of an Array. This method will sort the elements alphabetically by default. Numbers will not be sorted correctly. To sort numbers, we must create a function that compare numbers. After sort() method, Array is changed.
  - **Syntax:**

```
ArrayObject.sort()
```

  - **Example:**

```
<script languagae="javacript">
        var subArr = new Array()
        arr[0] = "PHP"
        arr[1] = "C"
        arr[2] = "CSS"
        document.write(subArr.sort())
</script>
```

  - **Output:**

```
C, PHP, CSS
```

DATE OBJECT:

JavaScript does not have the datatype as Date. However, we can use Date object & its methods to work with dates and times. Some important things about methods of date object.

Seconds & minutes	0 to 59
Hours	0 to 23
Day	0(Sunday) to 6(Saturday)
Date	1 to 31
Month	0(January) to 11 (December)
Year	Years since 1900

Atmiya University Rajkot

Methods:

- **Date():** This method returns today's date and time.
  - **Syntax:**

    dateObject.Date()
  - **Example:**

    var d=new Date()
    document.write(d.Date())

- **getDate():** The getDate() method returns the day of the month. The value returned by getDate() us a number between 1 and 31. This method is always used in conjunction with a Date object.
  - **Syntax:**

    dateObject.getDate()
  - **Example:**

    Var d=new Date()
    document.write(d.getDate())

- **getDay():** The getDay() method returns a number that represents the day of the week. The value returned by getDay() is a number between 0 and 6. Sunday is 0, Monday is 1 and so on. This method is always used in conjunction with a Date.
  - **Syntax:**

    dateObject.getDay()
  - **Example:**

    Var d=new Date()
    document.write(d.getDay())

- **getMonth():** The getMonth() method reurns the month as a number.
  - The value returned by the getMonth() is a number between 0 and 11. January is 0 and February is 1 and so on..
  - This method is always used in conjunction with a Date object.
  - **Syntax:**

    dateObject.getMonth()
  - **Example:**

    Var d=new Date()
    document.write(d.getMonth())

- **getYear():** The getYear() method returns the month, as a number. The value returned by getMonth() is a number between 0 & 11. January is 0, February is 1 and So on. This method is always used in conjunction with date object.
  - **Syntax:**

    dateObjecct.getYear()
  - **Example:**

    var d=new Date()
    document.write(d.getYear())

Amiya University Rajkot

- **getHours():** The getHours() method returns the hour of a time. The value returned by this method is a number that represents the Hour of a day. This method is always used in conjunction with date object.
  - **Syntax:**

    dateObject.getHours()
  - **Example:**

    ```
    var d=new Date()
    document.write(d.getHours())
    ```

- **getMinutes():** The getMinutes() method returns the minutes of a time. The value returned by the getMinutes() is a number that represents minutes of a current Hour. This method is used with conjunction with the date object.
  - **Syntax:**

    dateObject.getMinutes();
  - **Example:**

    ```
    var d=new Date();
    document.write(d.getMinutes());
    ```

- **getSeconds():** This method returns the seconds of a time. The value returned by this method is a number that represents the second of the current time. This method is always used in conjunction with date object.
  - **Syntax:**

    dateObject.getSeconds();
  - **Example:**

    ```
    var d=new Date();
    document.write(d.getSeconds());
    ```

- **getMilliseconds():** The getMilliseconds() returns the milliseconds of a time. The value returned by this method is a number that represents a millisecond of a current time. This method is always used in conjunction with date object.
  - **Syntax:**

    dateobject.getMilliseconds()
  - **Example:**

    ```
    var d=new Date()
    document.write(d.getMilliseconds())
    ```

Atmiya University Rajkot

Question Bank: (1 Mark Questions)

1) JavaScript is a Client-Side Scripting Language. (True/False) – **True**
2) There is no need to declare variables, classes or methods in JavaScript. (True/False) – **True**
3) We can add JavaScript in both <Head> and <Body> section. (True/False) – **True**
4) Which tag is used to describe JavaScript statement? – **<script>**
5) Which Literal has only two values like True & False? – **Boolean**
6) How many types of dialog boxes are available in JavaScript? – **3**
7) What is used to break line in message boxes? – **'\n'**
8) Which dialog box is used to display some information on web browser window? – **Alert**
9) Which dialog box is used to verify or acceptations from the user? – **Confirm**
10) Which dialog box is used to get some input from user? – **Prompt**
11) Which dialog box is return only Boolean datatype value? – **Confirm**
12) Which block is executed in Switch Case when expression does not match with any case? – **Default**
13) Which method is used to merge two or more strings in JavaScript? – **Concat**
14) Which property is used in string object? – **Length**
15) What is the document in document.write()?– **Object**
16) What is the write in document.write()? - **Method**
17) What is the output of statement - Math.ceil(-9.7)? – **"–9"**
18) What is the output of statement - Math.floor(-0.9)? – **"–1"**
19) What is the output of statement - Math.random()? – **0.n (any random no)**
20) What is the output of statement - document.write(1 + 2 + "3")? – **33**
21) What is the output of statement - document.write("1" + 2 + 3)? – **123**
22) What is the output of statement - document.write("10" * 2 + 3)? – **23**
23) parseFloat(1 / 2 + "2")=? – **0.52**
24) parseInt(0 * 1 + "2")=? – **2**
25) If x="GUJARAT", What will the output in document.write(x.substr(3,2))? – **AR**
26) Which method is used to remove and return first element of array? – **shift()**
27) Which method is used to remove and return last element of array? – **pop()**

Atmiya University Rajkot

28) Which method is used to add element into end of the array? – **push()**

29) Which method is used to add element into beginning of the array? – **unshift()**

30) If x="ATMIYA University", then output of alert(x.substr(5,9)) is ___. – **A Univers**

31) Which values return by getDay()? – **0 to 6**

32) Which values return by getMonth()? – **0 to 11**

Question Bank: (3 Marks Questions)

1) What is JavaScript? How to insert JavaScript into page?
   Ans.: What is JavaScript?
   How to insert JS.

2) Explain comment in JavaScript.
   Ans.: Comment description

3) Explain alert() in JS.
   Ans.: Alert with an example.

4) Explain confirm() in JS.
   Ans.: Confirm with an example.

5) Explain prompt() in JS.
   Ans.: Prompt with an example.

6) Explain function in JS.
   Ans.: Function with a syntax.

7) Explain scope of variable.
   Ans.: Description with an example.

8) Explain fontcolor(), concat() and match() with an example
   Ans.: Explanation and example.

9) Explain math object with its method.
   Ans.: Explanation of method of math object.

10) Explain date object with its method.
    Ans.: Explanation of method of date object.

Atmiya University Rajkot

Question Bank: (5 Marks Questions)

1) Describe Data types (Literals) in JavaScript.
   Ans. Different Literals. – 5 marks

2) Explain Dialog boxes in JavaScript.
   Ans. What is a dialog box? – 2 marks
   3 types of dialog boxes with an example. – 3 marks

3) Explain four Decision making statements in JavaScript.
   Ans. Explanation about decision statement with an example. – 5 marks

4) Explain Looping structure in JavaScript.
   Ans. Explanation about looping structure with an example. – 5 marks

5) Explain Array in JavaScript.
   Ans. Explanation about Array with an example. – 5 marks

6) Explain methods of String object with an example.
   Ans. Description of methods with example – 5 marks

7) What is Object, Method and Property? Explain method of Math object with an example.
   Ans. Object, Method, Property – 2 marks
   Method of Math Object. – 3 marks

8) What is Object, Method and Property? Explain method of Date object with an example.
   Ans. Object, Method, Property – 2 marks
   Method of Date Object. – 3 marks

9) Explain any 5 methods of Array object with an example.
   Ans. Description of methods with example – 5 marks

Atmiya University Rajkot

UNIT – 5
Events with DOM in JavaScript

EVENTS

What Is an Event?

In JavaScript, an **event** refers to any action or occurrence that happens in the browser, which the browser can detect and respond to. Events are integral to how users interact with a webpage, and they can be triggered by the user (like clicking a button, pressing a key, or resizing a window) or by the system itself (such as when a webpage finishes loading).

When events happen, you may want to do something. JavaScript lets you execute code when events are detected.

Mouse Events

onClick:

The onClick event occurs when the user clicks on an element. The onClick event is the most frequently used event type, which occurs when a user clicks the left button of the mouse. You can put your validation, warning etc., against this type of event.

❖ **Example:**

```
<script>
        function atmiya()
        {
                alert("Wel-come to ATMIYA University");
        }
 </script>
 <input type=button value="Atmiya" onClick=atmiya()>
```

onMouseOver

The onMouseOver event occurs when the mouse pointer is moved onto an element of web page.

❖ **Example:**

```
<script>
        function atmiya()
        {
                alert("Wel-come to ATMIYA University");
        }
</script>
<span onMouseOver=atmiya()>Atmiya</span>
```

Atmiya University Rajkot

onMouseOut

The onmouseout event occurs when the mouse pointer is moved out of an element of web page.

❖ **Example:**

```
<script>
    function atmiya()
    {
        alert("Wel-come to ATMIYA University");
    }
 </script>
 <span onMouseOut=atmiya()>Atmiya</span>
```

onMouseDown

The onmousedown event occurs when a user presses a mouse button over an element. The order of events related to the onmousedown event (for the left/middle mouse button).

❖ **Example:**

```
<script>
        function atmiya()
        {
                alert("Wel-come to ATMIYA University");
        }
</script>
<span onMouseDown=atmiya()>Atmiya</span>
```

onMouseUp

The onmouseup event occurs when a user releases a mouse button over an element after pressing a mouse button. This event triggers after onMouseOver and onMouseDown events.

❖ **Example:**

```
<script>
        function atmiya()
        {
                alert("Wel-come to ATMIYA University");
        }
</script>
<span onMouseUp=atmiya()>Atmiya</span>
```

Keyboard Events

onKeyDown

The onKeyDown event occurs when the user is pressing any key from the keyboard.

Atmiya University Rajkot

❖ **Example:**

```
<script>
        function atmiya()
        {
                alert("Wel-come to ATMIYA University");
        }
</script>
<input onKeyDown=atmiya()>
```

onKeyPress

The onKeyDown event occurs when the user is pressing any key from the keyboard. The onkeypress event is not fired for all keys (e.g. ALT, CTRL, SHIFT, ESC) in all browsers. To detect only whether the user has pressed a key, use the onKeyDown event instead, because it works for all keys.

❖ **Example:**

```
<script>
        function atmiya()
        {
                alert("Wel-come to ATMIYA University");
        }
</script>
<input onKeyPress=atmiya()>
```

onKeyUp

The onKeyUp event occurs when the user releases a key from the keyboard. This event triggers after onkeydown or onkeypress event.

❖ **Example:**

```
<script>
        function atmiya()
        {
                alert("Wel-come to ATMIYA University");
        }
</script>
<input onKeyUp=atmiya()>
```

Other Events

onFocus

The onFocus event occurs when an element gets focus. The onFocus event is most often used with <input>, <select>, and <a>. The onFocus event is the opposite of the onBlur event.

Atmiya University Rajkot

❖ **Example:**

```
<script>
        function atmiya()
        {
                alert("Wel-come to ATMIYA University");
        }
</script>
<input onFocus=atmiya()>
```

onBlur

The onblur event occurs when an object loses focus. The onblur event is most often used with form validation code (e.g. when the user leaves a form field). The onblur event is the opposite of the onfocus event.

❖ **Example:**

```
<script>
        function atmiya()
        {
                alert("Wel-come to ATMIYA University");
        }
</script>
<input onBlur=atmiya()>
```

onChange

The onchange event occurs when the value of an element has been changed. For radiobuttons and checkboxes, the onchange event occurs when the checked state has been changed. This event triggers also on <select> elements and also while elements loses focus.

❖ **Example:**

```
<script>
        function atmiya()
        {
                alert("Wel-come to ATMIYA University");
        }
</script>
<input onChange=atmiya()>
```

onError

The onerror event is triggered if an error occurs while loading an external file (e.g. a document or an image).

Atmiya University Rajkot

❖ **Example:**

```
<script>
        function atmiya()
        {
                alert("Error..!! \n Image could not load.");
        }
</script>
<img src="e:\wrong\path\image.jpg" onError=atmiya()>
```

onLoad

The onload event occurs when an object has been loaded. onload is most often used within the <body> element to execute a script once a web page has completely loaded all content (including images, script files, CSS files, etc.). The onload event can be used to check the visitor's browser type and browser version, and load the proper version of the web page based on the information.

❖ **Example:**

```
<body onLoad=atmiya()>
        <script>
                function atmiya()
                {
                        alert("Web-page loading process is completed.");
                }
        </script>
</body>
```

onUnload

The onunload event occurs once a page has unloaded (or the browser window has been closed). onunload occurs when the user navigates away from the page (by clicking on a link, submitting a form, closing the browser window, etc.). The onunload event is also triggered when a user reloads the page (and the onload event).

❖ **Example:**

```
<body onUnload=atmiya()>
        <img src="e:\wrong\path\image.jpg">
        <script>
                function atmiya()
                {
                        alert("Web-page could not load successfully.");
                }
        </script>
</body>
```

onReset

The onReset event occurs when a form is reset using reset button in web page.

Atmiya University Rajkot

❖ **Example:**

```
<form onReset=atmiya()>
        Name : <input><br>
        <input type=reset>
</form>
<script>
        function atmiya()
        {
                alert("Web-page form will be reset.");
        }
</script>
```

onSelect

The onSelect event occurs after some text has been selected in an element. The onSelect event is mostly used on <input type="text"> or <textarea> elements.

❖ **Example:**

```
<input onSelect=atmiya()>
<script>
        function atmiya()
        {
                alert("You select some text from input box.");
        }
</script>
```

onSubmit

The onSubmit event occurs when a form is submitted. This event is triggered only from <form> element.

❖ **Example:**

```
<form onSubmit=atmiya()>
        Name : <input><br>
        <input type=submit>
</form>
<script>
        function atmiya()
        {
                alert("Web-page form data submitted successfully.");
        }
</script>
```

Document Object Model

An HTML page is rendered in a browser. The browser assembles all the elements contained in the html page, downloaded from the web server in its memory. Once done the browser then renders these objects in the browser window. One HTML page is rendered in the browser window, the browser can no longer recognize individual HTML

Atmiya University Rajkot

elements. To create an interactive web page, it is imperative that the browser continues to recognize individual HTML objects even after they are rendered in the browser window.

This allows the browser to access the properties of these objects using the built in methods of the objects. Once the properties of an object are accessible then the functionality of the object can be controlled at will.

JavaScript-enabled browsers can recognize individual objects in an HTML page, after the page has been rendered in the browser, because the JavaScript enabled browser to recognize and uses the Document Object Model.

Using Document Object Model JavaScript enabled browsers identify the collection of web page objects (web page elements) that have to be dealt with while rendering an HTML based web page in the browser window.

DOM methods and property (Working with Forms in JavaScript)

In the DOM, all HTML elements are defined as objects. The programming interface is the properties and methods of each object. A method is an action you can do (like add or deleting an HTML element). A property is a value that you can get or set (like changing the content of an HTML element).

1. getElementById()
2. getElementsByName()
3. innerHTML property

1. getElementById()

If you want to quickly access the value of an HTML input, then this method can be used. It returns a reference of the HTML element (control).

⇨ **Syntax:**

getElementById(Reference Id);

❖ **Example:**

```
<body>
        Welcome <span id=x>Guest</span>,
        <script type=text/JavaScript>
                function abc()
                {
                        document.getElementById('x').innerHTML="ATMIYA";
                }
        </script>
        <input type=button value=" Ok " onClick=abc()>
</body>
```

Here we print a message in web page like "Welcome Guest," And call a function abc() using onClick event from input button. Function abc() get element by id 'x' and replace the content 'ATMIYA' using innerHTML property.

Atmiya University Rajkot

2. getElementsByName()

It returns a collection of objects with the specified NAME.

⇨ **Syntax:**

```
document.getElementsByName(Reference Name);
```

❖ **Example:**

```
<script language=JavaScript>
        function abc()
        {
                var x=document.getElementsByName("a");
                alert(x.length);
        }
</script>
<form>
        Science : <input type=radio name="a">
        Commerce : <input type=radio name="a">
        Arts : <input type=radio name="a">
        <input type=button onClick=abc() value=" Ok ">
</form>
```

3. innerHTML property

The easiest way to get or modify the content of an element is by using the innerHTML property.

When the innerHTML property is set, the given string completely replaces the existing content of the object. If the string contains HTML tags, the string is parsed and formatted as it is placed into the document. This property is accessible at run time as the document is being parsed.

Each HTML element has an innerHTML property that defines both the HTML code and the text that occurs between that element's opening and closing tag. By changing an element's innerHTML after some user interaction, you can make much more interactive pages.

However, using innerHTML requires some preparation if you want to be able to use it easily and reliably. First, you must give the element you wish to change an id. With that id in place you will be able to use the getElementById function, which works on all browsers.

After you have that set up you can now manipulate the text of an element. To start off, let's try changing the text inside a bold tag.

Atmiya University Rajkot

❖ **Example:**

```
<body>
        Welcome <span id=x>Guest</span>,
        <script type=text/JavaScript>
            function abc()
            {
                document.getElementById('x').innerHTML="ATMIYA";
            }
        </script>
        <input type=button value=" Ok " onClick=abc()>
</body>
```

Timer [*Events/functions*]

The window object allows execution of code at specified time. The timer event is used to execute the statement[s] after particular time. The time will be in milliseconds. Once the timer event is started it will execute the statement[s] after specified time, which is given by user. There are two ways to use the timer events.

- setTimeout();
- setInterval();

These timer functions are called timing events.

setTimeout();

The window.setTimeout() method can be written without the window prefix. The first parameter in setTimeout function is an execution part and the second parameter indicates the number of milliseconds before execution.

⇨ **Syntax:**

setTimeout(Execution part, miliseconds);

❖ **Example:**

```
<script type=text/javascript>
    setTimeout("alert('Welcome to ATMIYA University')",3000);
</script>
```

setInterval();

The setInterval() method repeats a given expression[s] at every specified time-intervals (in milliseconds). The setInterval() method will continue calling the function until clearInterval() is called, or the window is closed. The ID value returned by setInterval() is used as the parameter for the clearInterval() method.

⇨ **Syntax:**

setInterval(Execution part, miliseconds);

The window.setInterval() method can be written without the window prefix. The first parameter is the function to be executed. The second parameter indicates the length of the time-interval between each execution.

Note: *1000 miliseconds = 1 Second*

Atmiya University Rajkot

❖ **Example:**

```
<script type=text/javascript>
        setInterval("alert('Welcome to ATMIYA University')",3000);
</script>
```

How to Stop the Execution?

The clearTimeout() or clearInterval() method stops the execution of the function specified in timer event.

⇨ **Syntax:**

```
window.clearTimeout(setInterval VariableName)
window.clearInterval(setInterval VariableName)
```

The window.clearInterval() method can be written without the window prefix. The clearInterval() method uses the variable name returned from setInterval() function.

❖ **Example:**

```
<input type=button value=Stop onClick=abc()>
<script>
        var x=setInterval("alert('Welcome to ATMIYA University')",3000);
        function abc()
        {
                clearInterval(x);
        }
</script>
```

Error-Handling in JavaScript

Try…Catch Statement

The try...catch statement allows you to test a block of code for errors. The try block contains the code to be run, and the catch block contains the code to be executed if an error occurs. When users see errors, they often leave the Web page. This will teach you how to catch and handle JavaScript error messages.

⇨ **Syntax:**

```
try
{
    Some JS statements
 }
catch(variable name)
{
    Handle errors message
}
```

When executing JavaScript code, different errors can occur. Errors can be coding errors made by the programmer, errors due to wrong input, and other unforeseeable things.

Atmiya University Rajkot

Note that try...catch is written in lowercase letters. Using uppercase letters will generate a JavaScript error!

❖ **Example:**

```
<script>
        try
        {
                Document.write("Welcome to ATMIYA Univeristy");
        }
        catch(z)
        {
                alert(z.description);
        }
</script>
```

The example above determines statement into try block generate some error, because of object 'Document' is written in capital letter. Try block sent error to the catch() statement. In catch statement, parameter 'z' store this error and finally display it in alert box as a parameter description.

Throw Statement

Throw statement can be used together with the try...catch statement, to create an exception for the error. The throw statement allows you to create an exception. If you use this statement together with the try...catch statement, you can control program flow and generate accurate error messages.

⇨ **Syntax:**

throw (exception)

The exception can be a string, integer, Boolean or an object. Note that throw is written in lowercase letters. Using uppercase letters will generate a JavaScript error.

❖ **Example:**

```
<script>
        var x=prompt("Enter a number between 0 and 9.","");
        try
        {
                if(x>9)
                {
                        throw "Err1";
                }
                else if(x<0)
                {
                        throw "Err2";
                }
                else if(isNaN(x))
                {
                        throw "Err3";
                }
```

Atmiya University Rajkot

```
                else
                {
                        alert("Entered Value is "+x);
                }
        }
        catch(er)
        {
                switch(z)
                {
                        Case 'Err1':
                                alert("Too High Value");
                                break;
                        Case 'Err2':
                                alert("Too Low Value");
                                break;
                        Case 'Err3':
                                alert("Value is not a number");
                }
        }
</script>
```

The example above determines the value of a variable called x. If the value of x is higher than 9, lower than 0, or not a number, we are going to throw an error. The error is then caught by the catch argument and the proper error message is displayed.

Atmiya University Rajkot

Question Bank: (1 Mark Questions)

1) Which property is used in DOM? – **innerHTML**
2) Which method is used to access the set (group) of objects in DOM? – **getElementsByName()**
3) Which event is occur when input element lose the focus? – **onBlur()**
4) Which event is triggered while release the mouse button? – **onMouseUp()**
5) Which event is triggered while release the key from keyboard? – **onKeyUp()**
6) Which event is written only into form element? – **onSubmit()**
7) Stands for : DOM – **Document Object Model**
8) Which event is used to execute statement only once after particular time? – **setTimeout()**
9) Which function is used to stop output of interval function? – **clearInterval()**
10) Which function is used to repeats an expression at specified time. – **setInterval()**
11) Which two statements are used for error handling in JavaScript? – **try...Catch, throw**
12) A throw() statement is used with _____ statement. – **try...catch()**
13) onSubmit event is written in Submit button controller only. (True/False) – **False**
14) onReset event is written in Form element. (True/False) – **True**
15) onBlur event is triggered while image got blur pixel on web page. (True/False) – **False**
16) innerHTML is a method of Document Object Model. (True/False) – **False**
17) innerHTML is not a property of Timer event. (True/False) – **True**

Question Bank: (3 Marks Questions)

1) Explain any three mouse events with an example.
   Ans.: Mouse events with an example

2) Explain any three keyboard events with an example.
   Ans.: Keyboard events with an example

3) What is DOM?
   Ans.: DOM Explanation

4) How to stop timer execution? Explain with an example.
   Ans.: Explanation and example

Atmiya University Rajkot

5) What is setInterval?
   Ans.: Explanation of setInterval

6) What is setTimeout?
   Ans.: Explanation of setTimeout.

Question Bank: (5 Marks Questions)

1) What is an Event? Describe mouse events with an example.
   Ans. What is Event? – 1 mark
   Mouse events with an example – 4 marks

2) What is an Event? Describe Keyboard events with an example.
   Ans. What is Event? – 1 mark
   Keyboard events with an example – 4 marks

3) What is an Event? Describe onFocus, onError, onReset, onSelect with an example.
   Ans. What is Event? – 1 mark
   Events description with an example – 4 marks

4) What is DOM? Describe its methods with an example.
   Ans. What is DOM? – 2 marks
   Description of methods with example– 3 marks

5) What is DOM? Describe its property with an example.
   Ans. What is DOM? – 2 marks
   Description of property with example– 3 marks

6) What is Timer event? Describe its functions with an example.
   Ans. What is Timer? – 1 mark
   Description of its 2 functions with example– 4 marks

7) Explain setInterval? How to stop the execution of Interval?
   Ans. Explanation of setInterval. – 1 mark
   How to stop the execution? With example– 4 marks

8) Explain Error Handling statements with an example.
   Ans. Explanation of try...catch() statement with example – 2 marks
   Explanation of throw statement with example – 3 marks

Atmiya University Rajkot

Atmiya University
Rajkot

~ INDEX ~

UNIT NO.	UNIT NAME	PAGE NO.
1	**Introduction of HTML**	**01**
	Introduction to Internet	1
	What is HTML?	1
	HTML Tags	2
	Structure of HTML	3
	Basic HTML Elements	4
	Structured Elements	7
	HTML Character Entities	23
2	**Working with Form & Multimedia**	**28**
	Form	28
	Frameset	35
	HTML Multimedia	37
	Introduction to HTML 5	39
	New elements in HTML 5	40
3	**Cascading Style Sheet**	**46**
	What is CSS	46
	Use of CSS	47
	Types of CSS	49
	Types of Selector	51
	CSS Properties (Font, Text, Padding, Margin, Border, Background, table, Positioning, Styling Links, Image)	52
	Introduction of DHTML	70
	Page Layouts	71
4	**Introduction to Java Script**	**74**
	What is Java Script?	74
	Java Script Syntax, Variables, Operators	75
	Data Types & Literals	77
	Dialog Boxes	78
	Decision Statements	81
	Looping Statements	84
	Array in JavaScript	86
	User Define Function	87
	Built-in Function	90
	Objects, Method and Properties	92
	Browser Objects(Window, History, Location)	107
5	**Java Script Events & Documents Object Model**	**116**
	What is Event?	116
	Mouse Events	116
	Keyboard Events	118
	Other Events	119
	Document Object Model	123
	DOM Methods and Properties	123
	Timer Event	125
	Error handling	126
	Paper Style	**131**
	Model Question Paper	**132**

Atmiya University Rajkot

Atmiya University
Rajkot

Chapter - 1
Introduction of HTML

Introduction to Internet

Internet means Inter connected Network. It is a Wide Area Network of over 150 countries, which connects multiple amount of different network. Internet connects thousands of network like different universities, government premises and many companies etc.

Internet is a global computer network which provide different types of information and many more facilities. There are different computers, mobile phones and other devices are connect with each other using internet. It's works using TCP/IP (Transmission Control Protocol/Internet Protocol) to connect with each other.

All information found on Internet using Web page on web browser. Web browser is a software which can access and display web page. Web page is nothing more but is one type of a page, which provides an information. While two or more web pages connect with each other and make a directories, which is known as Web Site. To create this type of web page we need to learn its language and it is known as HTML (Hyper Text Markup Language).

What is HTML?

HTML is not a programming language but known as markup language. HTML is used to create or develop web page is called Hyper Text Markup Language. This language is interpreted by the web browser.

It's important to note that HTML is not a programming language. Technically it is known as a "markup" language, hence the name Hyper Text Markup Language.

HTML is the language interpreted by a Browser. Web Pages are also called HTML documents.

HTML contains a collection of case-insensitive tags that starts and ends with angular brackets (<>). You can create hypertext documents using any text editor such as Notepad, FrontPage, Dream weaver and the documents are saved with the extension, .html or .htm.

- **HTML enables you to:**

  Create Hypertext documents that can contain headings, tables, text and images.

  Create hyperlinks that enable you to navigate through pages.

  Embed video, sound clips, style sheets and other applications in the hypertext documents.

Atmiya University Rajkot

Using HTML you can create two type of pages.

1) Static
2) Dynamic

(1) Static Page

The contents of a static Web page do not change after it is created. A static Web page displays the same content each time it is retrieved. The content in a static page is coded using HTML and can only be changed by editing the HTML. So, you can only see the content of web page. You cannot make any interaction with static page.

(2) Dynamic Page

The content of web page depends on user input. So interaction with the user is required to display a web page. A dynamic page can contain animations, graphics and sound.

HTML TAGS

HTML tags are usually English words or abbreviation. But they are different from the regular text because they are placed in small angle brackets. HTML tags are used to mark-up HTML elements. HTML tags are written into the two symbols '<' and '>'. The surrounding characters are called angle brackets.

HTML tag elements normally come in pairs like <body> and </body>. The first body tag in a pair is known as starting tag and the second one is the ending tag. The text between the starting and ending tag is known as element content in HTML. HTML tags are not case sensitive; <body> means the same as <BODY>.

There are two types of tags in HTML:

- Singular Tag
- Paired Tag

- **Singular Tag:**

  It is also called a standalone tag. A stand-alone tag does not have its companion tag. For e.g., <HR>,

- **Paired Tag:**

  The tag is said to be paired if it is along with its companion tag. In paired tag the first tag is called opening tag and the companion tag is called closing tag. The ending element always comes after the content of the element.

  Here's a quick review of HTML tags:

For e.g., <B>ATMIYA University</B>

Atmiya University Rajkot

Structure of HTML Documents

- The first tag of an HTML document is always <HTML> and the last tag is always </HTML>.
- There are two main parts of HTML document.
  - Document Head
  - Document Body

Example:

```
<HTML>
    <HEAD>
        <TITLE>Document Title</TITLE>
    </HEAD>
    <BODY>
        - - - - - - - - - - - - - - - -
        Document Contents
        - - - - - - - - - - - - - - - -
    </BODY>
</HTML>
```

Document Head :

The header section of an HTML document contains information about the document (such as the title of the document, author, date of creation, software used to create the document). There should be no text or normal markup in the header section.

The information placed in this section is essential for inner processing. Within the document head there is one required header tag - the <TITLE>, </TITLE> field.

- **<TITLE> Tag**
  - You use the <TITLE> tag to set the title of an HTML document.
  - The <TITLE> tags are used inside the <HEAD> tags, as the, <TITLE> tag provides information about the document.
  - The title of the web page is normally shown in the title bar of the browser window.

Document Body :

<Body> …. </Body> is used to define document body. The body section contains the content of the document such as the actual text to display. Whatever content you want to display on web page are placed between <Body> …. </Body> Within the document body you can place all tags that related to text, images, tables, lists are placed in this section. <Body> have various attributes.

Atmiya University Rajkot

Basic HTML Tags

1. ** Tag *or* <STRONG> Tag**

   The or tag displays a boldface type.
   It is a paired tag.
   Syntax:
    Web Scripting Language
    Web Scripting Language

2. ** Tag *or* <Em> tag**

   The or <Em> tag displays text in italic.
   It is a paired tag.
   Syntax:
    Web Scripting Language
   <EM> Web Scripting Language </EM>

3. **The <U> *or* <Ins>Tag**

   It is used to display a text with underline.
   It is a paired tag.
   Syntax:
   <U>Web Scripting Language</U>

4. **<BIG> Tag**

   Big element shows the content in slightly bigger than normal size text. The <BIG> tag increases the font size from its current value by 1.
   Syntax:
   <BIG> Hello </BIG>

5. **<SMALL> Tag**

   Small element shows the content in slightly smaller than normal size text. The <SAMLL> tag reduces the font size from its current value by 1.
   Syntax:
   <SMALL>……. </SMALL>

6. **The <SUP> Tag**

   It is used to display a text as superscript.
   It is a paired tag.
   Superscript implies that the text is displayed in a text size smaller than the normal size and is positioned slightly above the normal body text.
   Example:
   x³

7. **The <SUB> Tag**

   It is used to display a text as subscript
   It is a paired tag.
   Example:
   H₂O

Atmiya University Rajkot

8. The <BLOCKQUOTE> Tag

A web browser inserts space margin from left and right side of the content. It also inserts margins for the block quote element.
This tag is used to set left and right indents for the margin of text.
It is used for displaying a text as quoted text.
It is a paired tag.

Example:

```
<body>
    <blockquote>
        Web page contents.
    </blockquote>
</body>
```

9. The <CENTER> Tag

It is used to set center alignment of any content enclosed between as per screen width.
Content may be text, image, table, list, form etc….
It is a paired tag.

Example:

```
<CENTER>Web Scripting Language</CENTER>
```

10. <STRIKE> or <s> or <Del> tag

It is used to display a text with a strikethrough character.
It is a paired tag.

Example:

```
<S>Web Scripting Language</S>
<del>Web Scripting Language</del>
```

**11. The
 Tag**

The
 Tag inserts a single line break.
The <BR> tag has no end tag.
When text needs to start from a new line and not continue on the same line, then <BR> tag should be used.

 tag does not skip one blank line between previous line and new line.
It does not have any attributes.

Example:

```
<BODY>
    Yogidham Gurukul
    <BR>
    ATMIYA University
    <BR>
    Rajkot-360 005.
</BODY>
```

Atmiya University Rajkot

12. <DIV> tag

This element defines a division or a section of particular content in an HTML document. It is often used to create a group of one or more elements to format them with styles.

Example:

```
<body>
        <h1> ATMIYA University </h1>
        <p> This is a paragraph. </p>
        <div>
            This is a header.
            <p> This paragraph is displayed in division part.</p>
        </div>
</body>
```

13. The <PRE> Tag

This tag is used to display exactly same output as written in notepad. The pre element defines preformatted text. The text written into the opening and closing tag usually displays spaces and line breaks. The <PRE> tag displays the content in a new line. It is a paired tag.

Example:

```
<BODY>
    <Pre>
        #    #    # # # #    #          #          # # #
        #    #    #          #          #         #    #
        # # # #   # # # #    #          #         #    #
        #    #    #          #          #         #    #
        #    #    # # # #    # # # #    # # # #    # # #
    </PRE>
</BODY>
```

14. The Comment Tag:

This <!-- -- > tag is used to give a comment to your web page. This is a paired tag. The comment is used to insert a comment line for user in the source code. A comment will be ignored by the browser. You can also store program-specific information inside comments. In this situation comments text will not be visible for the user, but they are still available to the program.

Example:

```
<!-- This text is a comment -->
```

Atmiya University Rajkot

Structured Elements

In Hyper Text Markup Language (HTML), structured tags are used to give structure to a document. For e.g., in a document, we can specify which is a heading and which part is the body of the document.

These tags are used in the body section of an HTML document. The structured tags provide visual effects to the content of an HTML document.

1. The <BODY> Tag

The <BODY> tag contains the content of the HTML document. The <BODY> tag is defined after the <HEAD> tag in an HTML document. So whether text, headings, textboxes, checkboxes, or any other possible content to be displayed must kept within the <Body> …. </Body>.

The attributes of the <BODY> tag enables you to use special features for the body content of an HTML document.

The various attributes of the <BODY> tag are:

❖ **Bgcolor**

It can be used to change the background color of a web page. By default the background color is white. You can set the value for Bgcolor using constant character or using hexadecimal code.

Example:

```
<Body Bgcolor="red">
```

❖ **Background**

It can be used to set an image in the background of an HTML document.

You can set path for background using any one of the following way

- Physical Path
- Relative Path

- Physical Path or Full Path:

  You have to specify the full path from the root directory to image file.

  Example:

  ```
  <Body background="c:\images\mountain.jpg">
  ```

- **Relative Path:**

  Whenever the image file exists in current working directory at that time you do not need to specify full path. You can directly give the image file because by default Browser searches for file only within current working directory. For

  Example:

  ```
  <Body background="mountain. jpg">
  ```

❖ **Text**

Enables you to specify the color of the text in hexadecimal code in an HTML document. By default the text color is black.

Example:

```
<Body text="red">
```

Atmiya University Rajkot

❖ **Link**

Enables you to set the default color of the links in hexadecimal code and the color name in an HTML document.

Here, Alink can be used to change the default color of a Hyperlink that is activated to whatever color is specified with this tag. With the use of this attribute user can specify the color name or a hexadecimal color code.

Here, Vlink can be used to change the default color of a hyperlink that is really visited to whatever color is specified with this tag. The user can specify the color name or an equivalent hexadecimal number.

2. The <P> Tag

The <P> tag is used to start a paragraph from a new line. It is a paired tag. This tag is also used to insert a line break with an additional space. The ending </P> tag ensures that after the end of a paragraph some space is left blank.

Syntax:

```
<P align="LEFT"|"RIGHT"|"CENTER"|"JUSTIFY">Text</P>
```

❖ **Align**

In <P> element align attribute specifies that the paragraph is aligned horizontally. The values assigned to the align attribute are:

LEFT: Displays a left aligned paragraph.

RIGHT: Displays a right aligned paragraph.

CENTER: Displays a centrally aligned paragraph. This is the default value for the align attribute.

JUSTIFY: This value displays a paragraph text as justified alignment.

Example:

```
<HTML>
    <HEAD>
        <TITLE>Document Title</TITLE>
    </HEAD>
    <BODY>
        <p align=justify>
            - - - - - - - - - - - - - - -
            Document's Paragraph
            - - - - - - - - - - - - - - -
        </p>
    </BODY>
</HTML>
```

3. The <FONT> Tag

The <FONT> tag enables you to configure the various properties of the text to be displayed on a Web page such as style, size and color.

You can configure these properties using the following attributes:

Attributes:

❖ **SIZE**: Enables you to set the size of the text. You can specify the value of the SIZE attribute as an integer between 1 and 7. The default size of the font is +3.

Atmiya University Rajkot

- **COLOR:** Enables you to set the color of the text. You need to specify the hexadecimal value of the COLOR attribute to configure the color of the text. The default value of the COLOR attribute is black.
- **FACE:** Enables you to set the font style of the text. The default value of the FACE attribute is Times New Roman.

Example:

```
<HTML>
    <HEAD>
        <TITLE>Font</TITLE>
    </HEAD>
    <BODY>
        <FONT SIZE=7 COLOR=Blue FACE=arial>ATMYA University</FONT>
    </BODY>
</HTML>
```

4. The Standard Headings

Heading tags are used to define headings of contents in a document. The Line tags are used to implement styles on a particular line of text. They separate one block of text from another.

The standard heading tags, <H1>, <H2>, <H3>, <H4>, <H5>, <H6> are used to display headings. The <H1> tag is used to display the most dominant heading whereas <H6> tag is used to display the least dominant heading.

The headings are displayed from a new line in an emphasizing font style in contrast to the rest of the body content. All the style appears in Boldface and size of heading depending on level chosen.

These all are the paired tag, so you must have to write both tag start tag and end tag.

Attribute of Heading Tags:

- **Align:**

This attribute is used to set alignment of headings. It have following four values.

Left – It align the heading in left hand side of the screen.

Right – It align the heading in Right hand side of the screen.

Center – It align the heading in Center of screen.

Justify – It align the heading in left hand side as well as right hand side of the screen.

```
<H1 align="LEFT"|"RIGHT"|"CENTER">.... </H1>
<H2 align="LEFT"|"RIGHT"|"CENTER">.....</H2>
<H3 align="LEFT"|"RIGHT"|"CENTER">.....</H3>
<H4 align="LEFT"|"RIGHT"|"CENTER">.....</H4>
<H5 align="LEFT"|"RIGHT"|"CENTER">.... </H5>
<H6 align="LEFT"|"RIGHT"|"CENTER">.....</H6>
```

Atmiya University Rajkot

5. The <HR> Tag

This tag is used to put a Horizontal line on the page. It is used to separate various sections of the document. The <HR> tag does not contain an ending tag.

The syntax of the <HR> tag is:

```
<HR
        color="colorName"
        align="CENTER"|"LEFT"|"RIGHT"
        size="thickness"
        width="width"
        noshade
>
```

In the above syntax, the various attributes of the <HR> tag are:

- **Color:** This attribute specifies the color of the horizontal line in web page. Value of this attribute comes in color name or 6 digits hexadecimal color code with "#" sign.
- **Size:** Specifies the thickness of a line in pixels. The default value is 2 pixels.
- **Width:** Specifies the horizontal width of a line. The default value for this attribute is the width of the Web browser window. The value for the attribute can be specified in either pixels or as a percentage of the width of the Web browser window.
- **Align:** Sets the horizontal alignment of a line. Three values can be assigned to this attribute, which are:
  - **CENTER:** Displays a center-aligned line. This is the default value for the align attribute.
  - **LEFT**: Displays a left-aligned line.
  - **RIGHT**: Displays a right-aligned line.
- **Noshade:** Specifies that no shading effect should be applied to the text included in the <HR> tag.

Example:

```
<HTML>
        <HEAD>
                <TITLE>Horizontal Line</TITLE>
        </HEAD>
        <BODY>
                Text before line
                <HR align="LEFT" width="50%" size="8" color="red">
                Text after line
        </BODY>
</HTML>
```

Atmiya University Rajkot

6. <MARQUEE> Tag

The marquee element creates with scrolling text, similar to a live ticker tape from a stock brokerage firm. HTML provides the special feature which enables us to display scrolling and animated text in the web. It is a paired tag element.

Syntax:

```
<MARQUEE
        align="center" || “left” || “right”
        behavior=”scroll” || “slide” || “alternate”
        bgcolor=”color”
        direction=”left” || “right”||”top”||”Bottom”
        height=”height”
        width=”width”
        HSpace = “”
        Vspace =””
        Loop=2 >
            - - - - ATMIYA University - - - -
</MARQUEE>
```

- **ALIGN:**
  For vertical alignment of the marquee text.
- **Behavior:**
  It determines how marquee behaves scrolling text like a ticker tape, flying text in or having it move from side to side.
- **Bgcolor:**
  To set the background color of the marquee.
- **Direction:**
  To set the direction used with behavior attribute.
- **Height & width:**
  To set the vertical & horizontal size of the marquee.
- **Hspace, Vspace :**
  It sets the horizontal space around the marquee and vertical space around the marquee.
- **Scrolldelay :**
  This is used to specify the speed of text in a marquee moves. You have to type the delay, in milliseconds before the marquee text begins to move. Whether value is given in numeric value. Possible values are Delay or amount.
- **Scrollamount :**
  This is used to specify the amount of pixel in a marquee’s moves. You have to type the value in amount of pixel.

Atmiya University Rajkot

❖ **Loop :**

With the use of Loop attribute defines how many times the marquee will move. The default is INFINITE, which means loops endlessly. Also one of the problems with loop is that content disappears after the last loop. To overcome these problem use Behavior=Slide.

7. <A> Anchor Tag or Hyperlink (Create a link with other pages)

A hyper link connect to a document (or a resource) with content on a web page. Hyperlinks can point to any resource on the web: an HTML page, an Image, a sound file, a movie etc. A link in HTML documents can be basically considered as a reference to other resource. This reference establish a link between resource file and web page's content.

There are three different kinds of links:

1) **Internal Link:** Links to anchors on the current page.
(href="#anchorname")

2) **External or Local:** Links to other pages within your domain.
(href="D:/image/filename.jpg")

3) **Global Link:** Links to other domains outside of your site.
(href="http://www.google.com")

How to make a LINK?

The tag used to create links are the <A>…</A>. Everything between these two tags will work as a hyperlink. You can navigate between different HTML documents by clicking the hyperlinks. A hypertext link can navigate web pages and open other files also. A hypertext link can contain text and graphics. The value of the HREF attribute of anchor element must be a URL address. When the user clicks any content between <A HREF> and </A> tags, the link is activated.

Syntax:

```
<a
        HREF="location"
        TARGET="windowName">     ….
</a>
```

Attributes of Anchor tag are:

❖ **HREF="Path Name** *or* **Location"**

Specifies a destination URL for the link. With the use of HREF (Hyperlink Reference), provide the URL address of particular document file. This address could be either an absoulate or relative address.

Aamra University Rajkot

Example of an absolute URL is:-
HREF="http://atmiyauniversity.edu/index.html"

Example of a relative URL is:-
HREF="d:/Atmiya/xyz.html"

TARGET="window's Name"

_blank = opens the linked file in new tab or a new browser window.

_self = This default value opens the linked file in the same frame as it was clicked.

_parent = This value opens the linked document in the parent frame.

_ top = with the use of this value opens the linked document in the full body of the window.

Example:

```
<html>
        <body>
          <a href="PathName" target="WindowName">Text</a>
        </body>
</html>
```

Using Image as Hyperlink

In HTML document Images can also work as Hyperlinks. To create hyperlink image, need to write the <IMG> tag between the opening and closing part of the anchor tag.

```
<A href="atmiya.htm">
        <IMG src="vsc.jpg">
</A>
```

Creating a BOOKMARK

The anchor also enables you to navigate within the current HTML document known as Bookmark. A Href attribute of the <A> tag is used to create bookmark.

The syntax is:
anchor-name

In above syntax, the # symbol specifies that the path given, represents a link within the same document. The anchor-name represents the name of the destination anchor tag.
For e.g., you need to create a web page, bookmark.htm, which contains bookmarks.

Atmiya University Rajkot

- The coding of the Bookmarking is:

```
<body>
    <a href=#bookmark1>CLICK HERE TO SCROLL DOWN TO BOOKMARK1</a>
        <P>
            Paragraph text Paragraph text Paragraph
            text Paragraph text Paragraph text
            Paragraph text Paragraph text Paragraph
            text Paragraph text Paragraph text
            Paragraph text Paragraph text Paragraph
            text Paragraph text Paragraph text
            Paragraph text Paragraph text Paragraph
            text Paragraph text Paragraph text
            Paragraph text Paragraph text Paragraph
            text Paragraph text Paragraph text
            Paragraph text Paragraph text Paragraph
            text Paragraph text Paragraph text
        </P>
      <a name=bookmark1>BOOKMARK1</a>
</body>
```

8. <link> Tag

Use the <link> tag to link external files such as style sheets into your document. The <link> tag defines the relationship between a document and an external resource. The <link> tag is most used to link to style sheets. This tag is used in <head> section.

Syntax:

<link rel="stylesheet" href="url" type="text/css">

Attributes:

- **REL** = "filetype"
  - Specifies the kind of file to be linked.
  - For an external style sheet, the value is "stylesheet".
- **TYPE** = "type"
  - Specifies more information about the particular type of file to be linked to, if that information is needed.
  - For style sheets the value can be "text/css" for cascading style sheets, or "text/javascript" for JavaScript style sheets.
- **HREF** = "location"

  Specifies a destination URL for the link.

Aaniya University Rajkot

Example:

```
<head>
        <link rel="stylesheet" type="text/css" href="styles.css" >
 </head>
 <body>
        <h1> ATMIYA University </h1>
        <p> I am formatted with a linked style sheet… </p>
 </body>
```

9. CREATING LIST

A list represents a series of words one after another.
Lists are used when the data are to be mentioned in form list of items.
There are three types of list,

1. Ordered list
2. Unordered list
3. Definition list

1. ORDERED LIST <OL>

An ordered list can be represented by <OL> tag. List having the numbered items are known as ordered list. These lists have list items that have a natural number. The <LI> tag is nested inside the <OL> tag to represent every single element of an ordered list. <LI>…</LI> must be placed between <OL>…</OL>.
It has two attributes.

```
<OL     Type=”a”|”A”|”i”|”I”|”1”     Start=value >
...
</OL>
```

Type attribute is used to set numbering format. The values may be one of the following:

a : Displays a series of lowercase letters.
A: Displays a series of uppercase letters.
i: Displays a series of lowercase Roman numerals.
I: Displays a series of uppercase Roman numerals.
1: Displays a series of numbers.

Start attribute is used to set starting position of the sequence. The values of this attribute are type of numeric.

2. UNORDERED LIST <UL>

These lists are also called bulleted list. These lists have list of items that do not have a number. This list is start with <UL> and end with </UL> tag. The <LI> tags are nested inside the <LI> tags to represent every single element of an unordered list.
<LI>…</LI> must be placed between <UL>…</UL> tag. It has one attribute.

```
<UL  Type=”Circle”|”Square”|”Disc”>     </UL>
```

Atmiya University Rajkot

The Type attributes is used to set type of Bullets. The values are:

Circle – Represents a circular non-colored bullet.

Disc – Represents a solid bullet.

Square – Represents a square bullet.

3. DEFINITION LIST <DL>

The definition list is represented by the <DL> tag. The <DL> tag is used to represent the definition of terms. It is a paired tag.

<DT> and <DD> tags are nested inside the <DL> tag to represent the term and the definition of the term respectively. You can say that definition list consists of main two parts.

Definition Term.

- You can define definition term using <DT> tag.
- It is a paired tag.

Definition Data

- You can define any definition description using <DD> tag.
- It is a paired tag.

LIST ITEMS - <LI> tag

The <LI> tag is used to represent elements of both, the ordered and the unordered lists.

The <LI> tags are nested inside the <OL> and the <UL> tags.

<LI> tag does not need any ending tag.

Other HTML tags such as the <p> tag, can be nested inside the <LI> tag.

Syntax:

```
<LI
        Type = "DISC"|"CIRCLE"|"SQUARE"|"A"|"a"|"i"|"I"|"1"
        Value="number"
>
```

IMAGE HANDLING IN HTML

Images used in HTML documents are classified into two classes:

Inline images and External images.

Inline images are displayed on a web page with the text and links and are loaded automatically when a HTML document is viewed on web browser.

External images are not displayed directly. They are stored separately from the HTML document and are loaded only when requested.

HTML allows placing of static or animated images in HTML page.

Commonly used format for images are PNG (portable N/w Graphics), GIF (Graphical Interchange Format), and JPEG (joint Photographic Experts Group)

10. <img>Tag

The <img> tag specifies an image to be displayed in an HTML document. An image can be a plain image that simply appears on the page. The <img> tag does not require a closing tag.

Atmiya University Rajkot

Syntax:

```
<img
        Src      =      "location"
        Height =        "tall"
        Width =         "wide"
        Alt      =      "alternative Text"
        Align    =      "alignment"
        Border =        "borderwidth"
        Hspace=         "horizmargin"
        Vspace=         "Vertimargin"
        Usemap=         "#mapname"
>
```

- **SRC**

  The src attribute is required for image location.
  Specifies the URL of the image to be displayed in the document.

- **Alt**

  Specifies text to be displayed if the browser does not support the <img> tag or if the use has superior image loading browser.

- **Align**

  Left align as image with the left margin.
  Right aligns as image with the right margin.
  Top aligns the top of an image with the top of the tallest item in the current item.
  Middle aligns the middle of an image with the baseline of the item in the current item.
  Bottom aligns as image with the bottom margin. Same as baseline.

- **Border**

  Specifies the width in pixels of a border around the image.
  The value must be an integer and pixel.

- **Height**

  Specifies the height of the image either in pixels or as a percentage of the height of the window block HTML that contains the image.
  It's indicate a number of pixels; specify the value as an integer.

- **Width**

  Specifies the weight of the image either in pixels or as a percentage of the weight of the window block HTML that contains the image.
  It's indicate a number of pixels; specify the value as an integer.

- **Hspace**

  Specifies the margins in pixels between the surrounding text and the right and left edges of an images.

Atmiya University Rajkot

- **Vspace**

  Specifies the margins in pixels between the surrounding text and the top and bottom edges of an images.

- **Ismap**

  To find out the coordinates pixels of an image ismap is used in <img> element.

- **Usemap**

  Represents an image map and specifies which Map tag is used to define the mapping for this image. It is associated with a MAP element's name attribute; and creates a relationship between the image and the MAP.

Example:

```
<html>
    <body>
        <img    src="Atmiya.gif"    alt="Yogidham Gurukul"    width="32"
                height="32">
    </body>
</html>
```

Creating Image Map

An image map refers to an image that is divided into different areas and each area links to a different HTML document. Thus image maps provide more functionality to hyper linked images.

You can click at a specific place within an image, to access the HTML document associated with that area.

Image maps can be created and applied to an image so specific portions of the image can be linked to a different file/image.

1. **<MAP> Tag**

The <MAP> tag contains information about the active area in an image map. The <MAP> tag contains one or more <AREA> tags. Each <AREA> tag describes a different area in the image and specifies the URL to which it connects.

Syntax:

```
<map name="mapName">
……
</map>
```

- **Name**="mapName"
  - Specifies the name of the map.
  - The NAME attribute is required.
  - Use this name preceded by # as the value of the USEMAP attribute of the <IMG> tag for the image map.

Atmiya University Rajkot

The <MAP> tag is used to define a client-side image map. An image map is an image with clickable areas. The Map element contains a number of area elements that defines the clickable areas in the image map.
Here the <AREA> tag defines a section of an image map. An image map can contain multiple sections where every section is associated with a different HTML document.

2. <AREA> Tag

The <AREA> tag describes an individual area in an image map.
The <AREA> tag must be used inside a <MAP> tag.

Syntax:

```
<AREA
        Shape="shape"
        Coords="coords"
        Href="location"
        Target="windowname"
         Nohref
>
```

- **Shape**
  Specifies the shape of the map.
  Each shape has its own form of the COORDS attribute.
  CIRCLE specifies a circle.
  RECT specifies a rect.
  Href="location"
  Specifies the URL to invoke when a user clicks the area.
- **Coords**
  Specifies the shape of the map.
  The cords attribute is required.
  Codes for circle are (center-x,center-y, radius)
  Codes for RECT are (Left-Top and Right-bottom)
  Codes for Poly are (x1,y1,x2,y2,.....)
- **TARGET**="frameName"
  Discussed previous in <A> element.
- **Nohref:** Specifies that the area has no links.

Example:

```
<body>
        <img src="Atmiya.jpg" alt="Planets" usemap="#planetmap">
        <map name="planetmap">
          <area shape="rect" coords="5,7,27,36" href="sun.htm">
          <area shape="circle" coords="90,58,9" href="moon.htm">
        </map>
</body>
```

Atmiya University Rajkot

11. CREATING TABLES

Table Tag

Tables allow you to arrange items in a Grid pattern. It provides an organized and systematic display of data. So table is combination of Rows and Columns. Any table is made up of header, row, column and cells. Here <TABLE> tag is used to create a table.

Syntax:

```
<TABLE
    Align="Left|Right|Center"
    Height="height" Width="width"
    Border="value" bordercolor="colorName"
    Cellpadding="value"   Cellspacing="value"
    Bgcolor="color"
    Hspace="horizmargin" Vspace="vertmargin"
    >
    …
</TABLE>
```

- **Align:** Specifies the Horizontal alignment of a table. The values are Left|Center|Right.
- **Height:** Specifies the height of a table. The value for the height attribute can be specified either in terms of number of pixels or as a percentage of the height of the web browser window.
- **Width:** Specifies the width of a table. The value for the width attribute can be specified either in terms of number of pixels or as a percentage of the width of the web browser window.
- **Border:** Specifies the thickness of a table border in pixels. By default, tables are displayed without borders. So its default value is 0.
- **Bordercolor:** Specifies the color of a table border in color name or a hexadecimal color code.
- **Cellpadding:** Specifies the space between the border and the content of the cell in pixels. The default value for this attribute is 1. Any text in the cells does not appear to be sticking to the border.
- **CellSpacing:** Specifies the space between the cells of a table in pixels or percentage. The default value for this attribute is 2.

Amrita University Rajkot

- **Bgcolor:** Specifies the background color of a table. It can be specified either using color names, or using rrggbb hexa triplet. Default value is “white”. It can be used with all table tags.

- **Background:** Specifies the background picture of a table. We can specify an image to set background of HMTL page or table.

- **Hspace:** Specifies the space between the left and right edges of a table and the rest of the text on the page in pixels.

- **Vspace:** Specifies the space between top and bottom edges of a table and the rest of the text on the page in pixels.

<CAPTION> Tag

The <caption> tag is used to define the caption of a table. The <caption> tag is used inside the <TABLE> tag.

Syntax:

```
<caption align=”center”> A T M I Y A    U n i v e r s i t y </caption>
```

The align attribute specifies the position of the caption in table. The values that can be assigned to the align values are top or bottom.

<TR> tag

The <TR> tag defines rows for a table. The <TR> tag is used inside the <TABLE> tag. Any special formatting like boldface or italics is done including appropriate formatting tags inside <tr>…</tr>

Syntax:

```
<TR    Bgcolor=”color”  Align=”left|right|center”
       Valign=”top|bottom|middle|baseline”>
…
</TR>
```

- **Bgcolor:** The Bgcolor attribute sets the color of the background for the row.

- **Align:** The align attribute specifies the horizontal alignment of the table. The values that can be assigned to the align attribute are:
  Left: Creates a left aligned table. This is the default value.
  Right: Creates a right aligned table.
  Center: Creates a centrally aligned table.

Atmiya University Rajkot

- **Valign:** The Valign attribute specifies the vertical alignment of the text within a cell. The values that can be assigned to the valign attribute are:

  Bottom: Displays the text at the bottom of the cell.

  Middle: Displays the text at the center of the cell. This is the default value for the valign attribute.

  Top: Displays the text at the top of the cell.

<TD> tag

The <TD> is used to specify the text in a cell of a table. The <TD> tag is used between the opening and closing <TR> tag. The content in a TH element is displayed BOLD and CENTERED. While the content in a TD element is look like REGULAR and LEFT-ALIGNED.

Syntax:

```
<TD
    Align="Center|Left|Right"
    Valign="Bottom|Middle|Top"
    Bgcolor="color"
    Colspan="value"
    Rowspan="value"
    Width="pixelwidth"
    Height="pixelheight"
    Nowrap
    >
    …
</TD>
```

Attributes:

- **Colspan:**
  This attribute is used to merge more than columns cell into single cell for a single row. This attributes is useful when one row of the table needs to be certain number of columns wide. It is used with <TD> and <TR> tag. This attribute can be set by giving a numeric value.

- **Rowspan:**
  This attribute is used to merge more than rows cell into single cell for a single column. This attribute is used when one column of the table needs to be certain number of row wide. It is used with <TD> and <TR> tag. This attribute can be set by giving a numeric value.

- **Nowrap:**
  Specifies that the lines in a cell cannot be broken into the new lines.

Atmiya University Rajkot

<TH> tag

In HTML document the heading contents for a table are specified with the <TH> element. The content of a table header is automatically appeared in centered and in bold text. TH element is a paired tag.

Syntax:

```
<TH
        Align="Center|Left|Right"
        Valign="Bottom|Middle|Top"
        Bgcolor="color"
        Colspan="value"
        Rowspan="value"
        Width="pixelwidth"
        Height="pixelheight"
        Nowrap
>
…

</TH>
```

HTML Character Entities:

Some characters like the <, >, & etc. characters, have a special meaning in HTML coding, and therefore it convert into markup language. So that to use this types of character compulsory used its character entity. To display a greater than or less than sign into web document, we have to use its character entity name or code.

Character Entities:

A sign like less than or greater than defines as an HTML element tag. When we use this sign, the browser convert as tag. To display this type of actual character sign we must writes its entities name or code in the HTML source.

<u>A character entity has three parts</u>:
(1) Starting with an ampersand sign (&)
(2) An entity name or a "#" sign
(3) An entity number, and finally a semicolon (;).

Atmiya University Rajkot

Ex.: To display a greater than (>) sign into web document, must write…
> or >

The character entities are case sensitive, so that it's written only in lowercase. Character entities name is easier to remember instead of its code but all the newest entity names are not support in the newest browser. At that time entity numbers is mostly prefer in almost all browsers.

The most common Character Entities:

Result	Description	Entity Name	Entity Number
	Non breaking		
<	Less than	<	<
>	Greater than	>	>
&	Ampersand	&	&
"	Quotation mark	"	"
'	Apostrophe	' (does not work In IE)	'

Some other commonly used Character Entities:

Result	Description	Entity Name	Entity Number
¢	Cent	¢	¢
£	Pound	£	£
¥	Yen	¥	¥
€	Euro	€	€
§	Section	§	§
©	Copyright	©	©
Æ	Registered Trademark	®	®
x	Multiplication	×	×
÷	Division	÷	÷

Atmiya University Rajkot

Question Bank: (1 Mark Questions)

1) What is the full form of HTML? – **Hyper Text Mark-up Language.**
2) Which attribute is used to change the default font color using Body tag? – **Text**
3) Which font size is default in HTML document? – **3**
4) What is the range of font size in HTML document? – **1 to 7**
5) Which attribute is used to change font style in Font element? – **Face**
6) How many attributes are available in <HR> element? – **5**
7) How many values are available in behavior attributes of Marquee tag? – **3**
8) Which value is default of behavior attribute in Marquee element? – **Scroll**
9) How many values are available in direction attributes of Marquee tag? – **4**
10) Which attribute is used to scroll marquee text at left to right side? – **Direction**
11) Which attribute is used to specify the speed of text move in marquee? – **Scrolldelay**
12) Which type of link is used to connect the link with current page's content? – **Internal link**
13) Internal link is known as _____ in HTML document. – **Bookmark**
14) Which attributes are used in <Link> element in HTML? – **Rel, Type, Href**
15) Which attribute is common in <OL> and <UL> element in HTML? – **Type**
16) Which elements are used to define Definition List in HTML? - **<DL>, <DT>, <DD>**
17) Which values are used in type attribute of <UL> element? – **Disc, Circle, Square**
18) Which attribute is compulsory in <Img> tag? – **SRC**
19) Which 2 elements are used to create image map in HTML? – **<MAP> and <AREA>**
20) Which attribute is used to specify the coordinates of image in Image Map? – **Coords**
21) Which element is used to give a title in HTML Table? – **Caption**
22) How many values are used in align attribute of <Caption> tag? – **2**
23) Which attribute is used to give a space between two cells of HTML table? – **Cellspacing**
24) Which attribute is used to set the content at top, bottom or middle in HTML cell? – **Valign**
25) Which Character Entity name is used to display Registered Trademark in HTML document? – **®**

Atmiya University Rajkot

True/False

26) There are only two values (Left & Right) are available in image alignment. (True/False) – **True**

27) We can't set the justify alignment in <H1> to <H6> element. (True/False) – **False**

28) Height attribute is used to specify the thickness of <HR> element in HTML. (True/False) – **False**

29) Nohref is the attribute of <Area> element. (True/False) – **True**

30) "∧" entity name is used to display "&" character entity. (True/False) – **False**

31) Make the pair of element and attribute.

	(A) Elements	(B) Attributes
1	<HR>	Alt
2	<Table>	Href
3	<IMG>	Noshade
4	<Link>	Link
5	<Body>	BorderColor

Question Bank: (5 Marks Questions)

1) Introduced Internet with HTML. (Page No.1)

Ans. What is Internet? – 1 mark
HTML Introduction – 2 marks
2 types of HTML page – 2 marks

2) What is HTML? Describe types of web-page and types of tag. (Page No.1)

Ans. What is HTML? – 1 mark
Types of Web-page. – 2 marks
Types of Tag. – 2 marks

3) Explain Structure of HTML Documents. (Page No.3)

Ans. HTML Structure – 1 marks
Head Section – 2 marks
Body Section – 2 marks

4) Describe the basic HTML tag with detail. (Page No.4)

Ans. There are 14 basic html tags are available.

5) Describe the Body element with its attributes. (Page No.7)

Ans. About Body element – 1 mark
Attributes of body elements – 4 marks

Aaniya University Rajkot

6) Explain <P> tag, heading tag and <font> element with its attributes and an example. (Page No.8)

Ans. <P>, <H1> to <H6> and <Font> - Introduction – 1 mark
Attributes of above elements. – 4 marks

7) Describe the HR element with various attributes in detail. (Page No.10)

Ans. HR Description – 1 mark
Elements of HR element – 4 marks

8) Explain Marquee element with its attributes. (Page No.11)

Ans. Marquee explanation – 1 mark
Its attributes – 4 marks

9) What is Hyperlink? Describe Anchor tag with its various attributes. (Page No.12)

Ans. What is Hyperlink? – 1 marks
Different types of link – 1 mark
Hyperlink in Image – 1 mark
Attributes of Anchor tag – 2 marks

10) What is Bookmark? Describe internal link with an example. (Page No.13)

Ans. What is Bookmark? – 1 mark
Explanation of Internal link – 3 marks
Example of Internal link – 1 marks

11) Explain the elements and attributes for List. (Page No.15)

Ans. What is list? – 1 mark
Types of List with elements and attributes – 4 marks

12) Explain Image handling. (Page No.16)

Ans. Explanation about Image element – 1 mark
Image attributes – 4 marks

13) What is Image map? Explain related elements and attributes with an example. (Page No.18)

Ans. What is Image map? Explanation – 1 mark
Explanation about elements and its attributes used in Image map – 4 marks

14) Describe all elements and its attributes related to table tag. (Page No.20)

Ans. Explanation about Table element – 1 mark
All elements and its attributes related to table – 4 marks

15) Explain character entities in detail. (Page No.23)

Ans. What is character entities? Explanation – 3 marks
List of character entities with entities name and entities code. – 2 marks

Atmiya University Rajkot

Chapter - 2
Introduction of Form and Frame

What is Form?

- The <form> is a block-level element that's defines an interactive part of a webpage. HTML Forms are required, when we need to collect some data from the site visitor. For example, if you need to collection of information data during user registration such as name, email address, credit card, etc., at that time form is required.
- A form will take input from the site visitor and then will post it to a back-end application such as CGI, ASP Script or PHP script etc.
- There are various form elements are available like Textbox, Multiline textbox, pull-down menu, checkbox, radio button, buttons et.

<FORM>:

- The <form> tag creates an HTML form. The form can contain interface elements such as text fields, buttons, checkboxes, radio button, and selection lists that let users enter text and make choices.
- All elements in the form must be defined between the <form> and </form> tags.
- **Syntax:**

```
<form
        Action="url"
        Method="methodname"
        Name="formname">
        ……
</form>
```

Attributes:

Action:

Action attribute is required to specify the URL address, where to store or submit the data information of concerned forms.

Atmiya University Rajkot

❖ **Method:**

Method attribute is specify that how to information is sent to the specified URL address.

- **GET**(the default) appends the input information to the URL which on most receiving systems becomes the value of environment variable QUERY_STRING.
- **POST** value specify types of method which sends the sensitive information like password to particular URL address. Value with POST request is not remember the data information in browser history.

❖ **Name**

Specifies the name of the form. The name is not displayed on the form. Scripting language can use the Name attribute to different forms if there are multiple forms on a page.

<INPUT> Element:

With the use of Input element form will receive the information data which are given by the user's input. The TYPE attribute determines to specific sort of form element to be created. The <input> element displays form element in several ways, depending on values of the **type** attribute.

❖ **TYPE Attribute**

A Type attribute is determine the various types of form controls.

1. **Text**

   A value "text" is used to define a one-line text input field into HTML form. "Text" is a default value of type attribute.

   Ex.:

   Name : <input type="text">

   Name: ATMIYA University

2. **Password**

   A value "password" is used to define hidden (unreadable) text field into HTML form of web page. The characters in a password field are not readable and shown as asterisks or circles symbol.

   Ex.:

   Password : <input type="password">

   Password : * * * * * *

3. **Radio**

   A value "radio" defines a radio button. Which let a user to select only one option from limited options of choice.

Atmiya University Rajkot

❖ **Checked**

A checked attribute is used to set the control checked by default in HTML form. Its use only with checkbox or radio button.

Ex.:

Gender:<input type="radio" checked>Male <input type="radio">Female

Output:

Gender: ◉Male ○Female

4. **Checkbox**

- A value "checkbox" defines a checkbox in form. Checkboxes let a user to select zero or more options of a limited number of choices.

Ex.:

Hobbies: <input type="checkbox" checked>Reading

<input type="checkbox"> Music

<input type="checkbox"> Chess

Output:

Hobbies : ☒Reading ☐Music ☐Chess

5. **File**

A value "file" is used to define a file-select field with a "Browse" button for file uploads.

Ex.:

Upload your file here:<input type="file">

Output:

Upload your file here: D:\Atmiya_University\file.jpg Browse

❖ **Multiple(Attribute)**

This attribute is a Boolean attribute. It define that the user is allowed to select more than one file. This attribute works with file input type. To select multiple files, hold down the CTRL or SHIFT key while selecting.

6. **Submit**

A value "submit" with type attribute defines a button for submitting form's data to a form-handler data file.

Ex.: <input type="submit">

Submit Query

7. **Reset**

A value reset defines a button named with Reset, which will reset all the information as default form's value.

Ex.: <input type="reset">

Reset

Atmiya University Rajkot

8. Button

A value “button” is used to define a button in HTML form.

Ex.: <input type=”button” value=” Ok ”>

Ok

9. Color

A color value is used to provide a color picker interface element in web page. If you don't specify a value, the default is #000000, which is black.

Ex.: Select Color: <input type=color>

Output:

Select Color:

10. Date

A date value is used to define a date picker interface. The resulting value includes the year, month, and day.

Ex.: Enter Date: <input type=date>

Output:

Enter Date: mm / dd / yyyy

11. Time

This Value allows the user to select a time from time controller from web page.

Ex.: Enter Time: <input type=time>

Output:

Enter Time: -- : -- --

12. Email

A value email is used for input fields that should contain an e-mail address. Depending on browser support, the e-mail address can be automatically validated when submitted.

Ex.: Enter E-mail: <input type=email>

Output:

Enter E-mail:

13. Number

A value number provides a numeric input field in web page.

Ex.: <input type=number>

Output:

21

Atmiya University Rajkot

14. Range

A value range defines a control for entering a number using a slider control. Default range is 0 to 100.

Ex.: 0 <input type=range> 100

Output:

- **Name Attribute**

  The name attribute specifies the name of the input element. The name attribute is used to give a name to the control which is sent to the server to be recognized and get the value. The name is not displayed on the form.

- **Size Attribute**

  Specifies the length of the input length field, in characters. The value should be an integer. This is also used with text or password type filed.

- **Value Attribute**

  A Value attribute is used to provide an initial value inside the control in HTML form.

- **Placeholder Attribute**

  This attribute defines a short hint that describes the expected value of an input field from user. The short hint is displayed in the input field before the user enters a value. The placeholder attribute works with a value like text, email, password and textarea element etc.

Restricted Attributes in Input element:

- **Maxlength Attribute**

  This attribute is used to specify the maximum number of characters a text box can accept. This is used with text box or password box controller.

- **Required Attribute**

  Required attribute specifies that an input field must be filled out before submitting the form's data. It is works with input types like text, password, email, date, time, number, checkbox, radio and file.

- **Min Attribute**

  The min attribute determine the minimum value into particular input field.

- **Max Attribute**

  The max attribute determine the maximum value into particular input field.

Atmiya University Rajkot

- **Readonly Attribute**

  The read only field cannot be modified by user. User can select, highlight and copy it's data. The readonly attribute specifies that the input field cannot be changed. User can read only. It is work with Input and textarea element.

- **Disabled Attribute**

  The disabled attribute specifies that the input field is disabled. A disabled field is unusable and un-clickable, and its value will not be sent when submitting the form.

<Button> Element:

The <button> tag is used to create clickable buttons on the web page. The difference between these elements and buttons created with the <input> tag is that you can place the content (images or text) inside the <button>.

The <button> tag comes in pairs, the content is written between the opening and the closing tags. When <button> element is usedinto the form, it works as the submit button. You can also use it as reset button. While use it outside the form, you can call JavaScript function on it.

Ex.:

```
<button>Ok</button>
<button><img src="xyz.jpg"></button>
```

<TEXTAREA> Element:

The <TEXTAREA> is paired tag element. It defines a multiline input field on an HTML form. A text area field lets the user enter words, phrases or numbers.

- **Syntax:**

```
<TEXTAREA
        Cols="columns"
        Rows="rows"
        Name="name">
        ……
</TEXTAREA>
```

Attributes:

- **Cols**

  Defines the width the text area can accommodate without scrolling.

- **Rows**

  Defines the number of line text area can accommodate without scrolling.

- **Name**

  This attribute specifies the name of the text area element.

Atmiya University Rajkot

<SELECT> Element:

The <select> element is applied to create a pull down (drop-down list) menu. The <SELECT> tag defines a selection list on an HTML form. The <SELECT> tag should be used between <FORM> tags. The <option> tags inside the <select> element define the available options in the list.

- **Syntax:**

```
<SELECT
        Name="selectName"
        Size="listlength">
……
</SELECT>
```

Attributes:

- **Name**

  This attribute specifies the name of the select element.

- **Size**

  This one specifies the number of option visible when the form is displayed.

- **Multiple**

  With the use of this attributes we can select multiple option from given list.

<OPTION> Element:

The <OPTION> tag define an option in a selection list. We can use the <OPTION>tag inside a <SELECT> tag.

- **Syntax:**

```
<OPTION
        Value="optionvalue"
        Selected
>
….
</OPTION>
```

Attributes:

- **Value**

  It's define to specify a value that is returned to the server when the option is selected and form is submitted.

- **Selected**

  This attribute is used to specify that the option is selected by default.

- **Disabled**

  With the use of disabled attribute user did not able to select specified option using mouse or keyboard event.

Atmiya University Rajkot

- **Example:**

```
<form>
        <select name="fruit">
                <option>Apple</option>
                <option>Banana</option>
                <option>Mango</option>
                <option>Orange</option>
        </select>
</form>
```

<FRAMESET>

The <FRAMESET> tag defines a set of frames that appear in a web browser window. The <FRAMESET> tag contains one or more <FRAME> tags that each describes a frame. An HTML document that contains a <FRAMESET> tag cannot contain a <BODY> tag.

- **Syntax:**

```
<frameset>
        Cols = “column size in %”
        Rows = “row size in %”
        Border = “size in pixel”
        Bordercolor=”color name”
        Frameborder=”Yes/No”
</frameset>
```

NOTE: You must supply at least one of the cols or rows attributes.

Attributes:

Cols

- Cols attribute specifies a comma-separated list of values giving the width of each frame in the frameset.
- It specifies how many columns are contained the frames into the frameset.
- Cols attribute specify the width of each column in one of the four ways –
  1. Absolute values in pixels.
     For example, to create two vertical frames, we can use like *cols = "300, 500"*.
  2. A percentage of the browser window.
     For example, to create three vertical frames, use *cols = "10%, 80%, 10%"*.
  3. Using a wildcard symbol.
     For example, to create three vertical frames, use *cols = "10%, *, 10%"*. In this case wildcard takes remain part of the window.
  4. As relative width of the browser window.
     For example, to create three vertical frames, use *cols = "3*, 2*, 1*"*.

Atmiya University Rajkot

- **Rows**
  This attribute specifies a comma-separated list of values, which display height of each frame on the screen. Row size could be same as cols size. If one of the values is missing, the browser did not display last frame of the list.

- **Border**
  This attribute specifies the size of the border thickness of each frame in pixels. For example, border = "5". A value of zero means no border.

- **Bordercolor**
  This one is used to specify the color of a frame's borders.

- **Frameborder**
  With the use of this attribute browser specifies whether border should be displayed between frames or not. This attribute have value either 1 (yes) or 0 (no). For example frameborder = "0" specifies no border.

<FRAME>:

The <FRAME> tag creates a frame, which is an individual independently scrollable region of a web browser. The <FRAME> tag must be used within a <FRAMESET> tag. Each frame has distinct URL that determines the content displayed by the frame.

- **Syntax:**

```
<frame
        SRC="URL"
        frameborder=Yes
        bordercolor=red
        scrolling=no
        name=frmName
        noresize
>
```

With the use of frames, you can display more than one web documents in to one browser window. Frames are the sub windows of a web browser window and each frame can display one HTML document.

For e.g., in a web browser window, one frame can display a static banner, second frame can display a navigation menu and third frame can display an HTML document based on the selected menu from the second frame.

Attributes:

- **Bordercolor**
  This attribute is used to specify the color of a frame's borders.

Atmiya University Rajkot

❖ **Frameborder**

With the use of this attribute browser specifies whether border should be displayed between frames or not. This attribute have value either 1 (yes) or 0 (no). For example frameborder = "0" specifies no border.

❖ **Noresize**:

All border of the frames can resize by clicking and dragging on the borders of a frameset. With the use of noresize attribute a user did not able to resize the frame's height or width. For example noresize = "noresize".

❖ **SRC="URL"**

- This attribute is used to specify the URL address of the file, which should be loaded in the particular frame. Its value can be any URL.
- For example, SRC = "D:/html/Atmiya.html" will load an HTML file available in html directory.
- **Example:**

```
<html>
    <frameset>
        <frame src="Atmiya.html">
    </frameset>
</html>
```

HTML Multimedia

Multimedia comes in many different formats. It can be almost Images, music, sound, videos, records, films, animations, and many more, which u can see or listen. Web page contain many types of multimedia contents like audio or video. This types of elements are stored in media files.

HTML Plug-in

HTML Plug-in allows the extra functionality to the web browser. HTML Plug-ins are computer programs which extend more functionality of a web browser. Plug-ins can be used for many purposes: display maps, scan for viruses, verify your bank id, etc.

Plug-ins can be added to web pages with the <object> tag or the <embed> tag.

<Object>

The <object> tag defines an embedded object within an HTML document. This element is used to include different types of media files into HTML document such as images, videos, audio, Java applets, ActiveX controls, PDF document, Flash animations etc.

<Embed>

The <embed> element can be used to embed external application, typically multimedia content like audio or video into an HTML document.

- **Example**:

```
<object width="400" height="400">
    <embed src="Atmiya.pdf">
    <embed src="Atmiya.swf">
</object>
```

Atmiya University Rajkot

HTML Audio

The <audio> element is used to embed audio content in an HTML document without requiring any additional plug-in like Flash player.

- **Example:**

```
<audio controls autoplay>
        <source src="Atmiya.mp3">
</audio>
```

Attributes:

❖ **SRC:**
Specifies the location of the audio file. Alternatively, you can use the preferred <source> tag as it allows for multiple options.

❖ **Autoplay:**
This Boolean attribute specifies that the audio will automatically start playing as soon as it can do so without stopping to finish loading the data.

❖ **Controls:**
If specified, the browsers will display controls to allow the user to control audio playback, such as play/pause, volume, etc.

❖ **Loop:**
This Boolean attribute specifies that the audio will automatically start over again, upon reaching the end.

❖ **Muted:**
This Boolean attribute specifies whether the audio will be initially silenced. The default value is false, meaning that the audio will be played.

HTML Video

The <Video> element is used to create video content in to web page document without any type of additional plug-in. There are three types of formats are supported in video element, like mp4, ogg and webM.

- **Example:**

```
<video controls autoplay>
        <source src="Atmiya.mp4" type="video/mp4">
</video>
```

Attributes:

❖ **SRC:**
This attribute is used to specify the location of the video file. The sub tag <source> is preferred to allow the multiple file option.

❖ **Height:**
This attribute is used to specify the displayed height area of the video.

Atmiya University Rajkot

- **Width:**
  This attribute is used to specify the displayed width area of the video.

- **Autoplay:**
  This Boolean attribute is used to play the video automatically as soon as possible.

- **Controls:**
  This attribute is used to display the video controls and allow to the user to use it like play, pause, stop, volume etc.

- **Loop:**
  This attribute is used to specify that the specified video will play automatically again and again.

- **Muted:**
  This attribute is specifies that the video played with sound or silenced. The default value of this attribute is false.

- **Poster:**
  This attribute is specifies an image to be shown into the video screen until the user hits the play button. If the poster attribute is not specified, the first frame of the video is displayed as the poster.

Introduction to HTML5

HTML5 is the latest and most enhanced version of HTML. HTML5 is supported new and latest functionality of element and attribute, which works well and more user friendly.HTML5 is a cooperation between the World Wide Web Consortium (W3C) and the Web Hypertext Application Technology Working Group (WHATWG).

Browser Support

The latest versions of the browser such as Safari, Google Chrome, Mozilla Firefox, and Opera all support the future and functionality of HTML5. While Internet Explorer 9.0 will also have support some HTML5 functionality.

The mobile web browsers that come pre-installed on iPhones, iPads, and Android phones all have excellent support for HTML5.

- **The most interesting new HTML5 elements are:**

  New semantic elements like <header>, <footer>, <article>, and <section>.
  New attributes of form elements like number, date, time, calendar, and range.
  New graphic elements: <svg> and <canvas>.
  New multimedia elements: <audio> and <video>.

Atmiya University Rajkot

HTML5 API's (Application Programming Interfaces)

- **HTML Geolocation**
  Geolocation is an API that helps the user to identify the web browser's geographic location. Firefox was one of the first browsers to use geolocation. Geolocation is to connect a web search with map data to help users to locate places within walking distance from your current location.

- **HTML Drag and Drop**
  The HTML5 allows you to drag and drop API for dragging and dropping specified object within and between web sites.

- **Canvas 2D Context**
  HTML5 allows user to draw and manipulate of graphics in a browser using <canvas> functionality. Using **canvas** element without the 2D Context API, user not be able to draw any graphical object. There are brushes, palette and paint all rolled into one.

- **Full Screen API**
  This API controls the use of the user's full screen in to web pages, without the browser's different user interface.

- **Detecting device orientation**
  Get the information when the user's device like mobile or tablet change its orientation (portrait or landscape). Device are react different while its orientation is differ.

New Elements in HTML 5

1. **<Mark> element**
   The HTML <mark> tag is used for indicating text as marked or highlighted for reference purposes. Highlighting text on a web page can help bring important information immediately to the reader's attention. The <mark> element is used to highlight text inside of another element such as a paragraph, list, or table.
   Ex.:<mark>marking effect with yellow color</mark>

2. **<abbr> element**
   Abbr means Abbreviation. The <abbr> element is used along with a title attribute to associate a full-text explanation with acronym. This element give useful information to browsers, translation systems and search-engines, while user move the cursor upon the particular text or object.
   Ex.:<abbr title="Atmiya University">AU</abbr>

3. **<Details> element**
   The <**details**>**tag** specifies additional details, which can view or hide by user in web-browser. The details element can be used to create an interactive widget that the user can open and close. Any type sort content can be put inside the <details> tag. The content of a <details> element should not be visible unless the open attribute is set.

Atmiya University Rajkot

Attribute:

Open: The open attribute is a Boolean attribute. This attribute specifies that the details should be visible (open) to the user.

Sub Element: Summary

The <details> element is used to pair a <summary> statement with additional related details. The <summary> is displayed, and a user can view or hide additional details by clicking on the summary.
The <summary> tag is used to specify a visible heading for the details. The heading between opening and closing element <summary>can be clicked to view or hide the particular details.

Ex.:

```
<details>
        <summary>HTML</summary>
        Hyper Text Mark-up Language
</details>
```

Output: ▼ HTML
Hyper Text Mark-up Language

4. **<Progress> element**

The <progress> tag represents the progress of a task. It displays an indicator showing the completion progress of a task, typically displayed as a progress bar.

Attribute:

Value: This attribute specifies how much task has been completed in web-page. A value of this attribute must be between 0 to max, or between 0 and 1 if max is omitted. If there is no value attribute, the progress bar is indicates that the process is continuously ongoing.

Max: This attribute specifies that how much the task progresses completed. The max attribute must have a value greater than zero and be a valid floating point number. The default value is 1.

Ex.: <progress value=20 max=100>

Output:

Downloading progress:

5. **<Meter> element**

The <meter> is a new element in HTML5. The tag defines a scalar measurement in the known range or graphic representation of a fractional number. This types of element is used to display the battery level, disk space usage, etc. To use the <meter> tag, you need to know the maximum value.

Atmiya University Rajkot

Attributes:

Min: This attribute specifies the minimum value defined in the range.

Max: This attribute specifies the maximum value defined in the range.

Value: This is a mandatory attribute which is used to specify a value in numbers. The number may be integer or floating point number.

High: This attribute specifies a range that is considered as high value.

Low: This attribute specifies a range that is considered as low value.

Ex.:
```
<meter value=21 min=20 max=100 style="width:30%"></meter>
<meter value=0.7 style="width:30%"></meter>
```

Output:

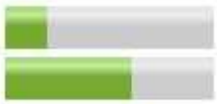

6. <Fieldset>&<Legend> element

The <fieldset> tag draws a box around the related or group elements.

HTML <fieldset> tag is used to group the logically related fields/labels contained within an HTML form. The use of this tag is optional while creating an HTML form but using <filedset>, it is easy to understand the purpose of grouped elements of form. The <legend> tag is used with the <fieldset> element as a first child to define the caption for the grouped related fields.

The tag provides an opportunity to break forms down into logical sections. In the browser, a box around content is drawn.

Sub Element: Legend

The <legend> tag is used to define a caption of a logical section defined by the <fieldset> element.

HTML <legend> tag used to add a caption (title) to a group of related form elements that are grouped together into the <fieldset> tag. The <legend> element always work with the <fieldset> element.

Ex.:
```
<fieldset>
        <legend>Form title</legend>
</fieldset>
```

Output:

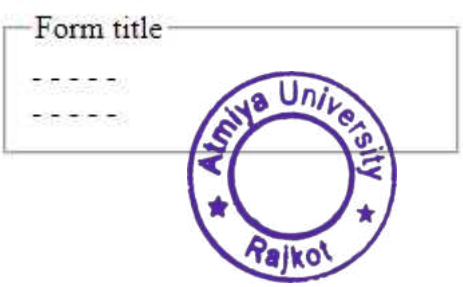

Atmiya University Rajkot

7. <OptGroup> element

OptGroup element is sub tag of <Select> element. This element is used to create a group of specific category options in your drop-down list within a select element. This one makes it easier for user to select their choices form multiple types of groups. If there are long list of options into drop-down control, groups of related options are easier to handle for a user.

Attribute: label

The **HTML** <optgroup> **element** creates a grouping of options within a <select> element. The <optgroup> is used to group related options in a drop-down list.

Value:

Disabled – Disabled attribute specifies that an option-group should be disabled. With the use of disabled attribute user did not able to select specified option using mouse or keyboard event.

Label – This attribute specifies a label for an option-group. The name of the group of options, which the browser can use when labeling the options in the user interface. This attribute is mandatory if this element is used.

Example:

```
<select required>
        <optgroup label="Web-Designing">
                <option value=html>HTML</option>
                <option value=css disabled>CSS</option>
                <option value=js>JavaScript</option>
        </optgroup>
        <optgroup label="Multimedia">
                <option value=AE>AfterEffect</option>
                <option value=PS>Photoshop</option>
                <option value=Fls>Flash</option>
        </optgroup>
</select>
```

Output:

Atmiya University Rajkot

Question Bank: (1 Mark Questions)

1) Which attributes are used in <Form> of HTML? – **Action, Method, Name**
2) Which values are used in Method attribute of Form? – **Get, Post**
3) Which value is default for method attribute in form? – **Get**
4) What value is the default in type attribute of <Input>? – **Text**
5) Which value is used in type attribute to select one option from multiple choice in form? – **radio**
6) Which control is used to select zero or more option from multiple choice in form? – **Checkbox**
7) Which value is used in type attribute to upload file in form? – **File**
8) Which attribute is used to specify the limitation of input character in textbox? – **Maxlength**
9) Which element is used to input the multiple line into control field? – **Textarea**
10) Which attribute is used in <textarea> element? – **Cols, Rows, Name**
11) Which element is used to create a pull down menu in form? – **Select**
12) Which attribute is used to select more choice in pull down menu? – **Multiple**
13) Which attribute is used to specify that the option is selected by default in pulldown menu? – **Selected**
14) Which attribute is used to load html file in frame? – **SRC**
15) Which attribute is used to add source file in <source> element to insert audio? –**SRC**
16) Which attribute is used to insert video control like Play/Pause and Volume in Video element? –**Control**
17) Which attribute is used to set an image in starting of video clip in <video> element? – **Poster**
18) Which attribute of <video> start the preview of video automatically in web page? – **Autoplay**
19) Which attribute specifies that the video will automatically start over again, upon reaching the end? – **Loop**
20) _____ is the latest and most enhanced version of HTML. – **HTML5**
21) Drawing and manipulation of graphics in a browser is possible using _____. – **Canvas**
22) Give the full form of W3C – **World Wide Web Consortium**
23) Give the full form of API –**Application Programming Interfaces**
24) <Audio> and <Video> are the new Multimedia elements of HTML5. (True/False) – **True**

Question Bank: (5 Marks Questions)

1) Explain Form element with its attributes. (Page No. 28)

   Ans. What is form? – 2 marks
   Form Attributes – 3 marks

2) Describe Form with its all controls. (Page No. 28 & 29)

   Ans. What is Form? – 1 marks
   Controls of Form – 4 marks

Atmiya University Rajkot

3) Explain Input element with type attribute.(Page No. 29)
Ans. About Input element – 1 marks
About type attribute with its values – 4 marks

4) Explain Input element with its attributes. (Page No. 29)
Ans. About Input element – 1 mark
Attributes of Input element – 4 marks

5) Explain restricted attributes in Input element with an example. (Page No. 32)
Ans. Explanation of 6 restricted attributes – 5 marks

6) Describe textarea and Pull down menu. (Page No. 33)
Ans. About Textarea and Select element – 1 mark
Textarea attributes – 1 marks
Attributes of Select and Option element – 3 marks

7) Explain Frameset with an example. (Page No. 35)
Ans. Frameset Explanation – 1 mark
Frameset Attributes – 4 marks

8) Explain Frame with an example. (Page No. 36)
Ans. Frame Explanation – 1 mark
Frame Attributes – 4 marks

9) Explain Multimedia in HTML. (Page No. 37)
Ans. Explanation about Multimedia & Plug-in – 2 marks
Object& Embed Element with attributes – 2 marks
Example – 1 mark

10) Explain Multimedia with Audio element. (Page No. 37 & 38)
Ans. What is Multimedia? – 1 mark
Audio element in HTML. – 1 mark
Attributes of Audio element. – 3 marks

11) Explain Multimedia with Video element. (Page No. 37 & 38)
Ans. What is Multimedia? – 1 mark
Video element in HTML. – 1 mark
Attributes of Video element. – 3 marks

12) Give the brief introduction of HTML5. *Or*
What is HTML5? Explain HTML5 API's. (Page No. 39 & 40)
Ans. What is HTML5? – 1mark
HTML5 browser support – 1 mark
New elements of HTML5. – 1 mark
HTML5 API's – 2 marks

13) Explain new element in HTML5. (Page No. 40)
Ans. 7 elements with an example – 5 marks

Atmiya University Rajkot

Chapter - 3
Cascading Style Sheet

What is CSS?

CSS stands for Cascading Style Sheets. CSS is used to control the style of a web document in a simple and easy way.

Styles are used generally for web-designing purpose so it works with HTML. Styles are normally stored in Style Sheets.

External Style Sheets can save your lot of work. External Style Sheets are stored in CSS files. Multiple style definitions will cascade into one.

Styles Solve a Common Problem:

HTML tags were originally designed to define the content of a document. Supposed to say "This is a header", "This is a paragraph", "This is a table", by using tags like <h1>, <p>, <table>, and so on. The layout of the document was supposed to be taken care of by the browser, without using any formatting tags.

As the two major browsers - Netscape and Internet Explorer - continued to add new HTML tags and attributes (like the <font> tag and the color attribute) to the original HTML specification, it became more and more difficult to create Web sites where the content of HTML documents was clearly separated from the document's presentation layout.

To solve this problem, the World Wide Web Consortium (W3C) created STYLES in addition to HTML.

All major browsers support Cascading Style Sheets.

Style Sheets Can Save a Lot of Work:

- Styles sheets define HOW HTML elements are to be displayed, just like the font tag and the color attribute in HTML 3.2. Styles are normally saved in external .css files.
- External style sheets enable you to change the appearance and layout of all the pages in your Web, just by editing one single CSS document!
- CSS is a breakthrough in Web design because it allows developers to control the style and layout of multiple Web pages all at once.
- As a Web developer you can define a style for each HTML element and apply it to as many Web pages as you want. To make a global change, simply change the style, and all elements in the Web are updated automatically.

Atmiya University Rajkot

Multiple Styles Will Cascade into One:

Style sheets allow style information to be specified in many ways.
Styles can be specified inside a single HTML element, inside the <head> element of an HTML page, or in an external CSS file.
Even multiple external style sheets can be referenced inside a single HTML document.

Uses of CSS:

1. **Text Formatting and color**

   CSS can be used to create number of text effects, such as:
   - Choosing specific fonts and font size.
   - Setting bold, italics, underline, and text shadows.
   - Changing text color and background color.
   - Changing the colors of link or removing underlining.
   - Aligning text.
   - Stretching and adjusting text size and line spacing.
   - Transforming sections of text to upper, lower or mixed case.

2. **Graphical Appearance and Layout**
   - Setting a background graphic, controlling its location, tiling, and scrolling.
   - Drawings borders and outlines around sections of a page.
   - Setting horizontal and vertical margins on all elements, as well as vertical and horizontal padding.
   - HTML tables, forms, and lists are presented.

3. **Dynamic Action**
   - Mouse over effects on links.
   - Dynamically inserted content before or after HTML tags.
   - Automatic numbering of page elements.

CSS Syntax:

```
<STYLE type="text/css" >
        Selector {property: value ; property: value ; ....}
</STYLE>
```

A CSS comprises of style rules that are interpreted by the browser and then applied to the corresponding elements in your document.

Atmiya University Rajkot

A style rule is made of three parts…

1) **Selector** – A selector is an HTML tag at which a style will be applied. This could be any tag like <h1> or <table> etc.
2) **Property** – A property is a type of attribute of HTML tag. Put simply, all the HTML attributes are converted into CSS properties. They could be color, border etc.
3) **Value** – Values are assigned to properties. For example, color property can have value either red or #F1F1F1 etc.

You can put CSS Style Rule Syntax as follows…

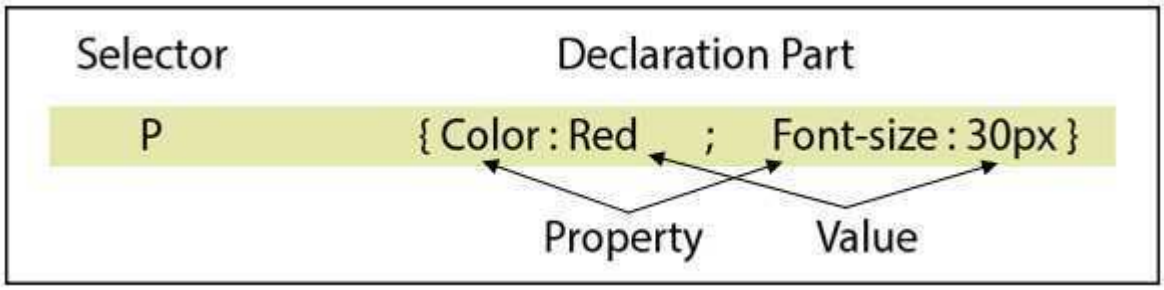

The style assign a process accomplished with the <STYLE>….</STYLE>tags.The <STYLE></STYLE> HTML tags are written within the <HEAD>…</HEAD> tags.In the <STYLE> Tag, the expression "TYPE=text/css" indicate that the style sheet Confirm to CSS syntax.

The CSS syntax is made up of three parts: a selector, a property and a value.The selector is normally the HTML element/tag you wish to define, the property is the Attribute you wish to change and each property can take a value. The property and value are separated by a colon and surrounded by curly braces:

- **Example:**

```
body {color: black}
```

CSS Comments:

You can insert comments into CSS to explain your code, which can help you when you edit the source code at a later date. A comment will be ignored by the browser.

A CSS comment begins with "/*", and ends with "*/", like this:

```
/* This is a comment */
  P{
        text-align: center;
        /* This is another comment */
        Color:red
  }
```

Atmiya University Rajkot

Types of CSS and How to Insert a Style Sheet:

- There are three ways of inserting a style sheet:
  1) External Style Sheet
  2) Internal Style Sheet
  3) Inline Styles

1) External Style Sheet

An external style sheet is ideal when the style is applied to many pages. With an external style sheet, you can change the look of an entire Web site by changing one file. Each page must link to the style sheet using the <link> tag.

The <link> tag goes inside the head section:

```
<head>
        <link rel="stylesheet" type="text/css" href="css file name">
</head>
```

The browser will read the style definitions from the css file and format the document according to it. An external style sheet can be written in any text editor. The file should not contain any html tags. Your style sheet should be saved with a .css extension.

An example of a style sheet file is shown below…

Style.css

```
P   {
        Color: yellow;Font-family: arial;
}
```

Simple.html

```
<html>
    <head>
        <link rel=”stylesheet” type=”text/css” href=”Style.css”>
    </head>
    <body>
        <P>India is my Country.</P>
    </body>
<html>
```

Atmiya University Rajkot

2) Internal Style Sheet

An internal style sheet should be used when a single document has a unique style.
You define internal styles in the head section by using the <style> tag, like this:

```
<html>
    <head>
            <style type="text/css">
            p { color: red; font-family: arial }
            </style>
    </head>
</html>
```

The browser will now read the style definitions, and format the document according to it.

3) Inline Styles

An inline style loses many of the advantages of style sheets by mixing content with presentation. Use this method sparingly, such as when a style is to be applied to a single occurrence of an element.
To use inline styles you use the style attribute in the relevant tag. The style attribute can contain any CSS property.
The example shows how to change the color & the left margin of a paragraph…

```
<p style="color: orange; font-size: 20px">
This is a paragraph
</p>
<p> Hello ATMIYA</p>
```

Multiple Style Sheets

If some properties have been set for the same selector in different style sheets, the values will be inherited from the more specific style sheet.
For example, an external style sheet has these properties for the h3 selector:

```
h3{Color: red; text-align: left; font-size: 8pt}
```

And an internal style sheet has these properties for the h3 selector:

```
h3{Text-align: right; font-size: 20pt}
```

If the page with the internal style sheet also links to the external style sheet the properties for h3 will be:

```
Color: red; text-align: right; font-size: 20pt
```

The color is inherited from the external style sheet and the text-alignment and the font- size is replaced by the internal style sheet.

Atmiya University Rajkot

Types of Selector:

1) The class Selector

With the class selector you can define different styles for the same type of HTML element. Say that you would like to have two types of paragraphs in your document: one right-aligned paragraph, and one center-aligned paragraph.
Here is how you can do it with styles:

```
p.right {text-align: right}
p.center {text-align: center}
```

You have to use the class attribute in your HTML document:

```
<p class="right">
This paragraph will be right-aligned.
</p>
<p class="center">
</p>
```

This paragraph will be center-aligned. But only one class attribute can be specified per HTML element! The example below is wrong:

```
<p class="right" class="center">   this is a paragraph.   </p>
```

You can also omit the tag name in the selector to define a style that will be used by all HTML elements that have a certain class.
In the example below, all HTML elements with class="center" will be center-aligned:

```
.center {text-align: center}
```

In the code below both the h1 element and the p element have class="center". This means that both elements will follow the rules in the ".center" selector:

```
<h1 class="center">
        This heading will be center-aligned
</h1>
<p class="center">
        This paragraph will also be center-aligned.
</p>
```

2) The id Selector

With the id selector you can define the same style for different HTML elements. The style rule below will match any element that has an id attribute with a value of "green":

```
#green {color: green}
```

The rule above will match both the h1 and the p element:

```
<h1 id="green">Some text</h1>
<p id="green">Some text</p>
```

The style rule below will match a p element that has an id with a value of "para1":

Atmiya University Rajkot

```
p#para1
{
        text-align: center;
        color: red
}
```

The style rule below will match any p element that has an id attribute with a value of "green":

```
p#green {color: green}
```

The rule above will not match an h1 element:

```
<h1 id="green">Some text</h1>
```

CSS Font Properties:

The CSS font properties allow you to change the font family, boldness, size, and the style of a text.

- font-family property
- font-style property
- font-weight property
- font-size property
- font-variant property

Font-family property:

The font-family property is a prioritized list of font family names for an element. The browser will use the first value it recognizes. Separate each value with a comma. The font family of a text is set with the font-family property. The font-family property should hold several font names. If the browser does not support the first font, it tries the next font, and so on.

Note: If the name of a font family is more than one word, it must be in quotation marks, like: "Times New Roman".

- **Example:**

```
Body{Font-family: courier, serif }
p{Font-family: arial, "lucida console", sans-serif}
<p style="font-family: arial, 'lucida console', sans-serif">
```

Font-style property:

The font-style property sets the style of a font. It is mostly used to specify italic text.

Normal : Value 'Normal' displays a normal font into content area.

Italic : Value 'Italic' displays a italic font into content area.

- **Example:**

```
P {font-style: italic }
```

Atmiya University Rajkot

Font-weight property:

The font-weight property sets how thick or thin characters in text should be displayed.

Normal	:	Value 'Normal' defines a normal character in selected content.
Bold	:	Value 'Bold' displays a thick characters into content area.
Bolder	:	Value 'Bolder' displays a thicker characters into content area.
Lighter	:	Value 'Lighter' displays a thick characters into selected tag.
100 to 900	:	It defines from thin to thick characters. Value 400 is the same as normal value and 700 is the same as bold value.

- **Example:**

```
P{ font-weight: bold }
```

Font-size property:

The font-size property sets the size of a text. Being able to manage the text size is important in web design. However, you should not use font size adjustments to make paragraphs look like headings, or headings look like paragraphs.

The font-size value can be an absolute, or relative size.

xx-small/x-small/small/ medium/large/x-large/ xx-large	:	Sets the size of the font to different sizes, from xx-small to xx-large
Smaller	:	Sets the font-size to a smaller size than the parent element
Larger	:	Sets the font-size to a larger size than the parent element
Length	:	Sets the font-size to a fixed size
%	:	Sets the font-size to a % of the parent element

- **Example:**

```
Body{ font-size: x-large }
p{ font-size: 10px }
```

Font-variant property:

The font-variant property is used to display text in a small-caps font, which means that all the lower case letters are converted to uppercase letters, but all the letters in the small-caps font have a smaller font-size compared to the rest of the text.

Normal :	The browser displays a normal font
Small-caps :	The browser displays a small-caps font

- **Example:**

```
P { font-variant: small-caps }
```

Atmiya University Rajkot

CSS Text Properties:

The CSS text properties allow you to control the appearance of text. It is possible to change the color of a text, increase or decrease the space between characters in a text, align a text, decorate a text, indent the first line in a text, and more.

- color property
- text-align property
- text-decoration property
- text-transform property
- word-spacing property
- letter-spacing property
- line-height property

Color property

The color property sets the color of a text.

Color : The color value can be a color name (red), a rgb value (rgb(255,0,0)), or a hex number (#ff0000).

- **Example:**

```
Body{color: rgb(255,255,0)  }
```

Text-align property

- The text-align property aligns the text in an element. It is used to set the horizontal alignment of a text. A text can be left or right aligned, centered, or justified.

Left	:	Aligns the text to the left
Right	:	Aligns the text to the right
Center	:	Centers the text
Justify	:	Define justified both margin

- **Example:**

```
P { text-align: center }
```

Text-decoration property

- The text-decoration property decorates the text. It is used to set or remove decorations from text. The value text-decoration: none; is often used to remove underlines from links.

None	:	Defines a normal text
Underline	:	Defines a line under the text
Overline	:	Defines a line over the text
Line-through	:	Defines a line through the text

- **Example:**

```
p  {text-decoration: underline}
```

Atmiya University Rajkot

Text-transform property

The text-transform property controls the letters in an element. It is used to specify uppercase and lowercase letters in a text. It can be used to turn everything into uppercase or lowercase letters, or capitalize the first letter of each word.

None	:	Defines normal text, with lower case letters and capital letters
Capitalize	:	Each word in a text starts with a capital letter
Uppercase	:	Defines only capital letters
Lowercase	:	Defines no capital letters, only lower case letters

- **Example:**

```
p{text-transform: uppercase}
```

Word-spacing property

The word-spacing property increases or decreases the white space between words. Negative values are allowed.

Normal	:	Defines normal space between words
Length	:	Defines a fixed space between words

- **Example:**

```
p{word-spacing: 30px}
p {word-spacing: -0.5px}
```

Letter-spacing property

The letter-spacing property increases or decreases the white space between characters. Negative values are allowed.

Normal	:	Defines normal space between characters
Length(px/pt/mm/cm…)	:	Defines a fixed space between characters

- **Example:**

```
p  {Letter-spacing: 12px  }
p  {Letter-spacing: -0.5px}
```

Line-height property

The line-height property increases or decreases the spacing between two lines of paragraph. A value of line-height property should be in numeric value.

- **Example:**

```
p  {Line-height: 2  }
p  {Line-height: 70px  }
```

Atmiya University Rajkot

CSS Multi-column Properties

column-count:

The column-count property specifies the number of columns of an element. All contents are divided into specifies number's columns. The following example will divide the text in the element into 3 columns:

Ex.:

```
div{
column-count: 3;
}
```

column-gap:

The column-gap property specifies the gap between two columns. The following example specifies a 40 pixels gap between the columns:

Ex.:

```
div{
column-count: 3;
column-gap:40px;
}
```

column-rule:

The column-rule property is a shorthand property for setting all the column-rule like width, style and color properties. This property displays visible division between two columns. The following example sets the width, style, and color of the rule between columns:

```
div{
    column-rule: 1px solid lightblue;
}
```

CSS Text Over Flow Property

OverFlow

The overflow property specifies whether to clip the content or to add scrollbars when the content of an element is too big to fit in the specified area. The overflow property only works for block elements with a specified height.

Atmiya University Rajkot

The overflow property has the following values:

- **Visible :** Default. The overflow is not clipped. The content renders outside the element's box
- **Hidden :** The overflow is clipped, and the rest of the content will be invisible
- **Scroll :** he overflow is clipped, and a scrollbar is added to see the rest of the content
- **Auto :** Similar to scroll, but it adds scrollbars only when necessary.

➢ **Example:**

```
div {
        overflow: auto;          //  scroll / visible / hidden
    }
```

CSS Padding Properties

➢ The CSS padding properties define the space between the element border and the element content.

➢ Negative values are not allowed. The top, right, bottom, and left padding can be changed independently using separate properties.

➢ A shorthand padding property is also created to control multiple sides at once.

- padding-top property
- padding-bottom property
- padding-left property
- padding-right property
- padding property

Padding-top property

The padding-top property sets the top padding (space) of an element. Negative values are not allowed.

Length(Pixel or %)**:** Defines atop padding in % of the height of the closest element.

➢ **Example:**

```
h1{ padding-top:10px }
```

Padding-bottom property, padding-left property, padding-right property

The padding-bottom property, padding-left property, padding-right property sets the bottom padding (space), left padding (space), and right padding (space) of an element respectively. Negative values are not allowed.

Value : Same to padding-top property

➢ **Example:**

```
h1 { padding-right:10px; padding-left: 10px; padding-bottom:10px }
```

Atmiya University Rajkot

Padding property

The padding property is a shorthand property for setting all of the padding properties in one declaration. Negative values are not allowed.

padding-top padding-right padding-bottom padding-left	Sets the padding. The values comes in%(defines padding in % of the width of the closest element) and length (defines affixed padding)

- **Example:**

h1 {padding: 10px}

The padding will be 10px on all four sides h1

h1{padding: 10px2%}

Top and bottom padding willbe10px, left and rightpaddingwillbe2% of the width of the closest element.

h1 {padding: 10px2% 15px}

Top paddingwillbe10px, left and right padding will be 2%of the width of the closest element, bottom paddingwillbe15px

h1 {padding: 10px2% 15px20px}

Top paddingwillbe10px, right padding will be 2% of the width of the closest element, bottom padding will be15px, left padding will be20p.

CSS Margin Properties

The CSS margin properties define the space around elements. It is possible to use negative values to overlap content. The top, right, bottom, and left margin can be changed independently using separate properties. A shorthand margin property can also be used to change all of the margins at once. Netscape and IE give the body tag a default margin of 8px. Opera does not! Instead, Opera applies a default padding of 8px, so if one wants to adjust the margin for an entire page and have it display correctly in Opera, the body padding must be set as well!

- margin-top property
- margin-bottom property
- margin-left property
- margin-right property
- margin

Margin-top property

The margin-top property sets the top margin of an element. Negative values are allowed.

Auto	:	The browser sets atop margin
Length	:	Defines affixed top margin
%	:	Defines atop margin in % of the total height of the document

Anjuman University Rajkot

- **Example:**

```
H1 { margin-top: 10px}
H2 { margin-top: 20px}
```

Margin-bottom property, margin-left property, margin-right property

The margin-bottom property, margin-left property & margin-right property sets the bottom margin, left margin & right margin of an element respectively. Negative values are allowed.

Value: Same to margin-top property

- **Example:**

```
h1   {margin-left: 10px ; margin-right: 10px }
h2   {margin-bottom: -20px }
```

Margin property

The margin property is a shorthand property for setting all of the properties for the four margins in one declaration. Negative values are allowed.

Margin-top : **Margin-right :** **Margin-bottom :** **Margin-left :**	Sets the properties for the margins. The values comes in%(defines a margin in % of the total height/width of the document), Length : (defines a fixed margin), and auto (the browser sets a margin).

- **Example:**

h1{margin:10px}

All four margins will be 10px.

h1 {margin: 10px 2%}

Top and bottom margin will be 10px, left and right margin will be 2%of the total width of the document.

h1 {margin:10px2% -10px}

Top margin will be 10px, left and right margin will be 2%of the total width of the document, bottom margin will be -10px

h1 {margin:10px2% -10px auto}

Top margin will be 10px, right margin will be 2%ofthe total width of the document, bottom margin will be -10px, left margin will be set by the browser

Atmiya University Rajkot

CSS Border Properties

The CSS border properties allow you to specify the style and color of an element's border. In HTML we use tables to create borders around a text, but with the CSS border properties we can create borders with nice effects, and it can be applied to any element.

Border-style property

The border-style property sets the style of the four borders, can have from one to four styles.

None	:	Defines no border
Hidden	:	The same as "none", except in border conflict resolution for table elements
Dotted	:	Defines a dotted border. Renders as solid in most browsers
Dashed	:	Defines a dashed border. Renders as solid in most browsers
Solid	:	Defines a solid border
Double	:	Defines two borders. The width of the two borders are the same as the border-width value
Groove	:	Defines a 3D grooved border. The effect depends on the border-color value
Ridge	:	Defines a 3D ridged border. The effect depends on the border-color value
Inset	:	Defines a 3D inset border. The effect depends on the border-color value
Outset	:	Defines a 3D outset border. The effect depends on the border-color value

- **Example:**

  table {border-style: dotted dashed solid double}

  Top border will be dotted, right border will be dashed, bottom border will be solid, left border will be double.

Border-color property

- The border-color property sets the color of the four borders. This property can take one to four colors. Always declare the border-style property before the border-color property. An element must have borders before you change the color of them.

Color	:	The color value can be a color name (red), A RGB value (RGB(255,0,0)), or a hex number (#FF0000).
Transparent	:	The border is transparent

Atmiya University Rajkot

- **Example:**

table {border-color: red}
All four borders will be red.

table {border-color: red green blue yellow}
Top border will be red, right border will be green, bottom border will be blue, left border will be yellow.

Border-width property

The border-width property is a shorthand property for setting the width of the four borders in one declaration, can have from one to four values.

Thin	:	Defines a thin border.
Medium	:	Defines a medium border.
Thick	:	Defines a thick border.
Length	:	Allows you to define the thickness of the borders.

- **Example:**

table {border-width: thin}
All four borders will be thin.

table {border-width: thin medium thick none}
Top border will be thin, right border will be medium, bottom border will be thick, left side will have no border.

Border-top-width property

The border-top-width property sets the width of an element's top border.

Thin	:	Defines a thin top border.
Medium	:	Defines a medium top border.
Thick	:	Defines a thick top border.
Length	:	Allows you to define the thickness of the top border.

- **Example:**

Table { border-top-width : thin }
Table { border-top-width : 0.5cm }

Border-bottom-width

The border-bottom-width sets the width of an element's bottom border.
Value: Same to border-top-width property

- **Example:**

Table{border-bottom-width: thin}

Atmiya University Rajkot

Border-left-width property

The border-left-width property sets the width of an element's left border.
Value : Same to border-top-width property

- **Example:**
  Table{border-left-width: thin}

Border-right-width property

The border-right-width property sets the width of an element's right border.
Value : Same to border-top-width property

- **Example:**
  Table{ Border-right-width: thin }

Border-top property

The border-top property is a shorthand property for setting all of the properties for the top border in one declaration.

Value	Description
border-top-width border-style border-color	Sets the properties for the top border

- **Example:**
  Table { border-top : thin dotted #00FF00}
  Table { border-top : solid #0000FF }

Border-left property, border-right property, border-bottom property

The border-left property, border-right property, border-bottom property is a shorthand property for setting all of the properties for the left border, right border& bottom border in one declaration respectively
Value: Same to border-top property

Border property

The border property is a shorthand property for setting all of the properties for the four borders in one declaration.
This property cannot set a different value for each side of the border, like "margin" and "padding".

Value	Description
border-width border-style border-color	Sets the properties for the four borders

- **Example:**
  P { border: thin dotted #00FF00}

Atmiya University Rajkot

CSS Background Properties

The CSS background properties allow you to control the background color of an element, set an image as the background, repeat a background image vertically or horizontally, and position an image on a page.

- background-color property
- background-image property
- background-repeat property
- background-attachment property
- background-position property

Background-color property

The background-color property sets the background color of an element.

Color	:	The color value can be a color name (red), a RGB value (RGB(255,0,0)), or a hex number (#ff0000)
Transparent	:	The background color is transparent

- **Example:**

```
P{background-color: Gray}
```

Background-image property

The background-image property sets an image as the background. Always set a background-color to be used if the image is unavailable.

Url	:	The path to an image
None	:	No background image

- **Example:**

```
Body {background-image: url(stars.gif);
        background-color: #000000}
```

Background-repeat property

The background-repeat property sets if/how a background image will be repeated.

Repeat	:	The background image will be repeated vertically and horizontally
repeat-x	:	The background image will be repeated horizontally
repeat-y	:	The background image will be repeated vertically
no-repeat	:	The background-image will be displayed only once

- **Example:**

```
Body {
        background-image : url(stars.gif);
        background-repeat : repeat-x
}
```

Atmiya University Rajkot

Background-attachment property

The background-attachment property sets whether a background image is fixed or scrolls with the rest of the page.

Scroll : The background image moves when the rest of the page scrolls

Fixed : The background image does not move when the rest of the page scrolls.

- **Example:**

```
Body{
        background-image: url(stars.gif);   background-attachment: scroll
       }
```

Background-position property

The background-position property sets the starting position of a background image. By default, a background-image is placed at the top-left corner of an element, and repeated both vertically and horizontally

1. Top Left
2. Top Center
3. Top Right
4. Center Left
5. Center Center
6. Center Right
7. Bottom Center
8. Bottom Right

If you only specify one keyword, the second value will be "center".

x- % y-% : The first value is the horizontal position and the second value is the vertical. The top left corner is 0% 0%. The right bottom corner is 100%.if you only specify one value, the other value will be 50%.

x-pos y-pos : The first value is the horizontal position and the second value is the vertical. The top left corner is 0 0. Units can be pixels (0px 0px) or any other CSS units. If you only specify one value, the other value will be 50%. You can mix % and positions.

- **Example:**

```
Body {
        background-image: url(stars.gif);
        background-repeat: no-repeat;
        background-position: top left
       }
```

Atmiya University Rajkot

CSS Tables

The look of an HTML table can be greatly improved with CSS:

Table Borders

To specify table borders in CSS, use the border property. The example below specifies a black border for TABLE, TH, and TD elements:

- **Example:**

```
table, th, td
{
    border: 1px solid black;
}
```

Notice that the table in the example above has double borders. This is because both the table and the th/td elements have separate borders.
To display a single border for the table, use the border-collapse property.

Collapse Borders

The border-collapse property sets whether the table borders are collapsed into a single border or separated:

- **Example:**

```
Table{    border-collapse : collapse }
table, th, td{   border: 1px solid black }
```

Table Width and Height

Width and height of a table is defined by the width and height properties. The example below sets the width of the table to 100%, and the height of the "th" elements to 50px:

- **Example:**

```
table {  width:100% }
th{   height:50px }
```

Table Text Alignment

The text in a table is aligned with the text-align and vertical-align properties. The text-align property sets the horizontal alignment, like left, right, or center:

- **Example:**

Td{ text-align: right }

The vertical-align property sets the vertical alignment, like top, bottom, or middle:

- **Example:**

```
Td{  height:50px;   vertical-align: bottom}
```

Atmiya University Rajkot

Table Padding

To control the space between the border and content in a table, use the padding property on 'TD' and 'TH' elements:

- **Example:**

```
Td{  padding:15px }
```

Table Color

The example below specifies the color of the borders, and the text and background color of TH elements:

- **Example:**

```
table, td, th{ border:1px solid green }
th{ background-color : green;  color : white }
```

CSS Element Positioning

The CSS positioning properties allow you to position an element. It can also place an element behind another, and specify what should happen when an element's content is too big.

Elements can be positioned using the top, bottom, left, and right properties. However, these properties will not work unless the position property is set first. They also work differently depending on the positioning method.

There are four different positioning methods.

Static Positioning

HTML elements are positioned static by default. A static positioned element is always positioned according to the normal flow of the page.

Static positioned elements are not affected by the top, bottom, left, and right properties.

Fixed Positioning

An element with fixed position is positioned relative to the browser window.

It will not move even if the window is scrolled:

- **Example:**

```
p.pos_fixed
{
position: fixed;
    top : 30px;
    right : 5px;
}
```

Note: IE7 and IE8 support the fixed value only if a !DOCTYPE is specified. Fixed positioned elements are removed from the normal flow. The document and other elements behave like the fixed positioned element does not exist. Fixed positioned elements can overlap other elements.

Atmiya University Rajkot

Relative Positioning

A relative positioned element is positioned relative to its normal position.

- **Example:**

```
h2.pos_left{ position : relative;   left:-20px  }
h2.pos_right{position : relative;  left:20px }
```

The content of relatively positioned elements can be moved and overlap other elements, but the reserved space for the element is still preserved in the normal flow.

- **Example:**

```
h2.pos_top{position : relative; top:-50px }
```

Relatively positioned elements are often used as container blocks for absolutely positioned elements.

Absolute Positioning

An absolute position element is positioned relative to the first parent element that has a position other than static. If no such element is found, the containing block is <html>.

- **Example:**

```
h2{
        position : absolute;
        left:100px;
        top:150px;
}
```

Absolutely positioned elements are removed from the normal flow. The document and other elements behave like the absolutely positioned element does not exist. Absolutely positioned elements can overlap other elements.

Overlapping Elements

When elements are positioned outside the normal flow, they can overlap other elements. The z-index property specifies the stack order of an element (which element should be placed in front of, or behind, the others).An element can have a positive or negative stack order:

- **Example:**

```
Img{
        position : absolute;
        left:0px ;  top:0px;
        z-index:-1;
}
```

An element with greater stack order is always in front of an element with a lower stack order.

Note: If two positioned elements overlap, without a z-index specified, the element positioned last in the HTML code will be shown on top.

Atmiya University Rajkot

Styling Links

Links can be styled with any CSS property (e.g. color, font-family, background, etc.).Special for links are that they can be styled differently depending on what state they are in.

The four links states are…

- a:link - a normal, unvisited link
- a:visited - a link the user has visited
- a:hover - a link when the user mouse over it
- a:active - a link the moment it is clicked

➢ **Example:**

```
a:link {color:#FF0000;}      /* unvisited link */
a:visited {color:#00FF00;}  /* visited link */
a:hover {color:#FF00FF;}  /* mouse over link */
a:active {color:#0000FF;}  /* selected link */
```

- **When setting the style for several link states, there are some order rules:**
  a:hover MUST come after a:link and a:visited
  a:active MUST come after a:hover

- **Common Link Styles**
  In the example above the link changes color depending on what state it is in.
  Let's go through some of the other common ways to style links:

- **Text Decoration**
  The text-decoration property is mostly used to remove underlines from links:

➢ **Example:**

```
a:link {text-decoration: none;}
a:visited {text-decoration: none;}
a:hover {text-decoration: underline;}
a:active {text-decoration: underline;}
```

- **Background Color**
  The background-color property specifies the background color for links:

➢ **Example:**

```
a:link {background-color:#B2FF99;}
a:visited {background-color:#FFFF85;}
a:hover {background-color:#FF704D;}
a:active {background-color:#FF704D;}
```

Atmiya University Rajkot

Image Style Property

Images play an important role in any webpage. Though it is not recommended to include a lot of images, but it is still important to use good images wherever required. CSS plays a good role to control image display. You can set the following image properties using CSS.

- Border-radius property (Rounded corner of image)
- Opacity property (Transparency in Image)
- Filter property (Filter effect in Image)

Border-radius property (Rounded corner of image)

Border-radius property is used to add rounded corner effect in image's corner or any other blocks like table and div tag in CSS style.

With the use of this elements, we can set the four corner's radius separately.

1) Border-top-left-radius
2) Border-top-right-radius
3) Border-bottom-left-radius
4) Border-bottom-right-radius

➢ **Example:**

```
Img { border-radius: 30% 0%30%0%  }          or
Img { border-top-left-radius:30% ; border-bottom-right-radius:30% }

<img src="ATMIYA_LOGO.jpg">
```

Output:

Atmiya University Rajkot

Opacity property (Transparency in Image)

The opacity property of an image is used to set the opacity of an image. This property is used to create a transparent image in Mozilla. IE uses filter:alpha(opacity=x) to create transparent images. In IE (filter:alpha(opacity=x)) x can be a value from 0 - 100. A lower value makes the element more transparent.

- **Example:**

In Mozilla: img{opacity:0.4}

In IE: img { filter:alpha(opacity=40)}

```
<img src = "ATMIYA_LOGO.jpg">
```

Filter property (Photo Filter effect)

The CSS filter property adds visual effects (like blur and saturation) to an element. The filter property is not supported in Internet Explorer or Safari 5.1 and earlier. To perform visual effect operations like blur, balancing contrast, brightness, color saturation, there are filter is used in to the web page.

- **Example:**

```
.blur { filter: blur(4px) }
.brightness { filter: brightness(250%) }
.contrast { filter: contrast(180%) }
.grayscale { filter: grayscale(100%) }
.huerotate { filter: hue-rotate(180deg)}
.invert { filter: invert(100%) }
.opacity { filter: opacity(50%) }
.saturate { filter: saturate(7) }
.sepia { filter: sepia(100%) }
.shadow { filter: drop-shadow(8px 8px 10px red)}

<img src=”ATMIYA_LOGO.jpg” class=blur>
```

Introduction of DHTML

DHTML stands for Dynamic HTML, it is totally different from HTML. The browsers which support the dynamic HTML are some of the versions of Netscape Navigator and Internet Explorer of version higher than 4.0. The DHTML is based on the properties of the HTML, JavaScript, CSS, and DOM (Document Object Model which is used to access individual elements of a document) which helps in making dynamic content. It is the combination of HTML, CSS, JS, and DOM. The DHTML make use of Dynamic object model to make changes in settings and also in properties and methods. It also makes uses of Scripting and it is also part of earlier computing trends.

Atmiya University Rajkot

Advantages:

- ✓ It is supported by big browser manufacturers like Microsoft and Netscape.
- ✓ Highly flexible and easy to make changes.
- ✓ Viewer requires no extra plug-ins for browsing through the webpage that uses DHTML, they do not need any extra requirements or special software to view it.
- ✓ It is possible to modify and replace elements even after a page is loaded, it is not required to create separate pages for changing styles which in turn saves time in building pages and also reduces the number of requests that are sent to the server.

Disadvantages:

- ✓ It is not supported by all the browsers. It is supported only by recent browsers such as Netscape 6, IE 5.5, and Opera 5 like browsers.
- ✓ Learning of DHTML requires a lot of pre-requisites languages such as HTML, CSS, JS, etc. should be known to the designer before starting with DHTML which is a long and time-consuming in itself.
- ✓ Implementation of different browsers are different. So if it worked in one browser, it might not necessarily work the same way in another browser.

Page Layout

Websites often display content in multiple columns (like a magazine or newspaper). HTML5 offers new semantic elements that define the different parts of a web page:

<table>
<tr><td colspan="2"><HEADER></td></tr>
<tr><td colspan="2"><NAVIGATION></td></tr>
<tr><td><SECTION></td><td rowspan="2"><ASIDE></td></tr>
<tr><td><ARTICLE></td></tr>
<tr><td colspan="2"><FOOTER></td></tr>
</table>

Floating Property

- ✓ It is common to do entire web layouts using the CSS float property. Float is easy to learn - you just need to remember how the float and clear properties work.
- ✓ Floating a box will shift it to the right or left of a line, with surrounding content flowing around it.
- ✓ Floating is normally used to shift around smaller chunks within a page, such as pushing a navigation link to the right of a container, but it can also be used with bigger chunks, such as navigation columns.
- ✓ Using float, you can float: left or float: right.

➢ **Example:**

```
div { float : left ; width : 200 }
```

Atmiya University Rajkot

Question Bank: (1 Mark Questions)

1) Which extension is used in external CSS file? – **.CSS**
2) Which tag is used for insert style sheet in HTML file? – **<Style>**
3) Which style type can apply directly into HTML tag? – **Inline style**
4) Which symbol is used to create Id selector? – **'#'**
5) Which symbol is used to create Class selector? – **' . ' (dot)**
6) Which property is used to create bold text? – **Font-weight**
7) Which property is used to define first character capital of all text of paragraph? –**Text-transform**
8) Which value is used to create first character capital of all text of paragraph? – **Capitalize**
9) Which value is the default value in background-repeat property? – **repeat**
10) Which value is used to repeat image vertically in CSS? –**repeat-y**
11) Which value is the default in background-attachment property in CSS? –**Scroll**
12) In which element we can apply the border-collapse property of CSS? –**Table**
13) Which three values are used with position property in CSS? –**relative, absolute, fixed**
14) Which property is used to change the stack order of overlapped element in CSS?–**Z-index**
15) Which property is used to remove the underline from hyperlink in CSS? - **Text-decoration**

[TRUE / FALSE]

16) Using CSS we can set different four side padding in HTML element. –**TRUE**
17) Small-Caps is the value of Text-transform property in CSS. – **FALSE**
18) Text-decoration is a value of Underline property in CSS. –**FALSE**
19) Letter-spacing cannot be applied in heading tag. –**FALSE**
20) Text-transform is used to remove underline from hyperlink. –**FALSE**

Atmiya University Rajkot

Question Bank: (5 Marks Questions)

1) Describe about types of Style sheet.(Page No. 46, 49)

   Ans. What is CSS? – 1 marks
   Three types of CSS – 4 marks

2) What is CSS? Explain style rule with syntax. (Page No. 46, 48)

   Ans. What is CSS? – 2 marks
   Style rules with 3 parts and syntax – 3 marks

3) Explain types of Selector in CSS. (Page No. 51)

   Ans. Explanation of 2 types of Selector. – 5 marks

4) Write CSS Font properties in detail. (Page No. 52)

   Ans. 5 types of font property – 5 marks

5) Write CSS Text properties in detail. (Page No. 54)

   Ans. 6 types of text property – 5 marks

6) Explain multi-column properties in CSS. (Page No. 56)

   Ans. 3 types of properties with an example – 5 marks

7) Explain Margin property with an example. (Page No. 58)

   Ans. Explanation of Margin property. – 5 marks

8) Explain CSS Border properties in brief. (Page No. 60, 61, 62)

   Ans. Three Border properties – 5 marks

9) Explain about CSS background property in brief. (Page No. 63)

   Ans. Five types of background properties – 5 marks

10) Explain CSS element positioning method. Describe Overlapping elements in CSS. (Page No. 66, 67)

    Ans. Element positioning method – 3 marks
    Overlapping elements – 2 marks

11) Explain Styling Links in CSS with an example. (Page No. 68)

    Ans. Explanation of Styling Links? – 4 marks
    Example – 1 marks

12) What is Border Collapse in table? Explain Border radius property with an example in CSS.(Page No. 65, 69)

    Ans. Border collapse in table – 1 marks
    Different border radius property with an example – 4 marks

13) Explain image style properties using CSS. (Page No. 69)

    Ans. Explanation of Image Radius, Opacity and Filter property – 5 marks

Atmiya University Rajkot

Chapter – 4
Introduction to JavaScript

What is JavaScript?

JavaScript was designed to add interactivity to HTML pages. The web pages developed in HTML contains certain limitations that, they can't be embedded with multimedia components, such as audio-video, graphics etc. To remove these limitations, we are using JavaScript in HTML. JavaScript is a client-side scripting language. A scripting language is a lightweight programming language. JavaScript is usually embedded directly into HTML pages. JavaScript is an interpreted language (means that scripts. execute without preliminary compilation). Everyone can use JavaScript without purchasing a license. i.e. It's an open source.

Client Side JavaScript:

It supplies objects to control browser.

For eg. It allows application to place elements on HTML form and give response to user events such as mouse clicks, form inputs and page navigation etc.

Server Side JavaScript:

It supplies objects relevant to running JavaScript on server. For eg. It allows application Relational Database (RDB), providing information from one page to another page.

Difference between JAVASCRIPT AND JAVA:

JAVASCRIPT	JAVA
JavaScript is Scripting Language.	Java is programming language.
It supports runtime system.	It supports compile-time system.
No distinction between types of Objects.	Objects are divided into classes and instances.
Added to any object dynamically.	Classes and instances cannot have properties and methods added dynamically.
No need to declare all variables, classes and methods.	Its needed.
JavaScript is not pure OOP.	Java is pure OOP.

Atmiya University Rajkot

How to insert JavaScript in to page?

To insert a JavaScript into an HTML page, we use the <script> tag. Inside the <script> tag we use the type attribute to define the scripting language.

Where to put JavaScript?

1) You can add JavaScript in <Head> section
2) You can add JavaScript in <Body>section
3) You can add JavaScript in both <Head> and <Body> section

NOTE: You can also add External JavaScript File having extension ".js".

1) JavaScript in <Head> Section.

Scripts to be executed when they are called, or when an event is triggered, go in the head section. Scripts in head section will be executed immediately while page loads into browser. If you place a script in the head section, you will ensure that the script is loaded before anyone uses it.

❖ **Example:**

```
<html>
        <head>
                <script type="text/JavaScript">
                        function message()
                        {
                                alert("ATMIYA Univeristy");
                        }
                </script>
        </head>
        <body onload="message()">
        </body>
</html>
```

2) JavaScript in <Body> Section.

Scripts to be executed when the page loads go in the body section. If you place a script in the body section, it generates the content of a page.

❖ **Example:**

```
<html>
        <head>
        </head>
        <body>
                <script type="text/JavaScript">
                        document.write("This message is written by JavaScript");
                </script>
        </body>
</html>
```

Atmiya University Rajkot

3) JavaScript in both <Head> and <Body>

You can place an unlimited number of scripts in your document, so you can have scripts in both the body and the head section.

❖ **Example:**

```
<html>
        <head>
                <script type="text/JavaScript">
                        ....
                </script>
        </head>
        <body>
                <script type="text/JavaScript">
                        ....
                </script>
        </body>
</html>
```

Comments in JavaScript:

The Unexcitable part of any program is known as "Comment". Comments are generally used to give instruction about the Program, and only useful for programmer. Comments can be added to explain the JavaScript, or to make the code more readable.

```
//This is single line comment.
/* This is Multi
 line comments */
```

Some important things to know when scripting with JavaScript.

✓ **JavaScript is case sensitive:**

A function named "myfunction" is not same as "myFunction" and a variable named "my Var" is not same as "myVar".

✓ **Symbols:**

Opening symbols, like…

({ [" ' must always have a matching closing symbols, like ' "] })

✓ **White space:**

JavaScript ignores extra spaces. You can add white space to your script to make it more readable. The following lines equivalent:

Name="Atmiya"
Name=" Atmiya"

✓ **Insert special characters:**

You can also insert special characters like ("' &) with a backslash.

Atmiya University Rajkot

❖ **Example:**

```
document.write ("You \& I sing \"Happy Birthday\".");
```

Output:

You & I sing "Happy Birthday".

Variables

✓ **What is variable?**

A variable is a name given to the memory location. A variable is a "container" for information you want to store. During the execution of the program the value of the variable will be changed.

✓ **JavaScript Variables**

JavaScript variables are used to hold values or expressions. A variable can have a short name like "x" or a more descriptive name like "car_name".

✓ **Rules for JavaScript variable names:**

Variable names are case sensitive (y and Y are two different variables)
Variable names must begin with a letter or the underscore character.

✓ **Declaring (Creating) JavaScript Variables**

You can create a variable with the "var" statement.

var variable-name = some value

❖ **Example:**

var x = 10 (now variable x holds value 10)

Data Types & Literals

The predefined identification of any variable is known as Data type. Or we can say that the data type defines the characteristics of variables. JavaScript can't support data types. But it supports Literals. Literals are used to represent values of variables of particular data type in JavaScript. These are fixed values not variables that you literally provide in your script.

✓ **Integer Literals:**

Integer Literals can be expressed as Whole Numbers without any decimal points. It can be positive or negative number.

❖ **Example:**

```
var a = 112;
var b = - 44;
```

✓ **Floating Point Literals:**

Floating Point Literals can be expressed as numbers with decimal points. It can be positive or negative number.

❖ **Example:**

```
var a = 1.23;
var b = -4.9
```

Atmiya University Rajkot

- ✓ **Boolean Literals:**
  Boolean Literals can be expressed as only with two values i.e. TRUE or FALSE. You can just assign true or false values, it will automatically take 0 as true value and 1 as false value.
  - ❖ **Example:**

```
var a = true;
var b = false;
```

- ✓ **String Literals:**
  String Literals can be expressed as a sequence of characters. It always enclose with either single quote(') or double quotes(").
  - ❖ **Example:**

```
var str1 = "Wel-Come"
var str2 = 'Atmiya'
```

- ✓ **Array Literals:**
  Array Literals can be expressed as a list of values that are called elements of Array. The values may be numbers, strings or any type of Literal.
  - ❖ **Example:**

```
var arr = new Array(3)
arr[0] = "One"
arr[1] = "Two"
arr[2] = "Three"
```

- ✓ **Object Literals:**
  Object Literals can be expressed as a list of pairs of property names and associated values of an Object enclosed in { }.
  NOTE: It is just a User Defined Object which is shown later on.

- ✓ **NULL Literals:**
  Null Literal consists of single value, which identifies a NULL i.e. empty. It is used to set initial value of variable that is different from other valid values.
  - ❖ **Example:**
    - var temp = null;
    - document. write("Value of temp is :"+temp);

Dialog Boxes

"Dialog Box" is nothing but a small separate window that contents provided by end user. In JavaScript, Dialog Boxes are very useful because they allow the script to interact with visitors where the visitor must provide a response to Dialog Box before script can continue processing. All Dialog Boxes in JavaScript are Modal Dialog Boxes and don't permit anything else to happen until Dialog Box receives a response from the user. JavaScript provides the ability to get user input or display small amount of text to the user by using Dialog Boxes.

Atmiya University Rajkot

There are three types of Dialog Boxes provided by JavaScript:

1) Alert Dialog Box.
2) Confirm Dialog Box.
3) Prompt Dialog Box.

1. ALERT Dialog Box:

Alert Dialog Box is use to display some information on web browser window. Alert Dialog Box is used to give warning messages to end users. The alert Dialog Box displays string passed to the alert () method as well as OK button. The JavaScript and HTML, in which this code is held, will not continue processing until OK button pressed.

Use of Alert dialog box:

- ✓ A message to display when user inputs invalid information.
- ✓ An invalid result from Calculation.
- ✓ A warning that a service is not available.

⇨ **Syntax:**

```
alert("message");
```

❖ **Example:**

```
<html>
<body>
    <script language="JavaScript">
        var a=5,b=7
        var c = a+b;
        alert("A + B : "+c);
    </script>
</body>
</html>
```

Output:

Atmiya University Rajkot

2. CONFIRM Dialog Box:

A Confirm Dialog Box is often used if we want the user to verify or accept something. A Confirm Dialog Box display predefined message with OK and CANCEL button. When a confirm Dialog Box pop up, the user will have to click either OK or CANCEL to proceed. If you press the OK button then it will return TRUE if you press CANCEL button then it will return FALSE.

Use of Confirm dialog box:

A message will display when we want any confirmation from end user.

⇨ **Syntax:**

```
confirm ("Message");
```

❖ **Example:**

```
<html>
<body>
    <script language="JavaScript">
        confirm("Would you like to close this file?");
    </script></body></html>
```

Output:

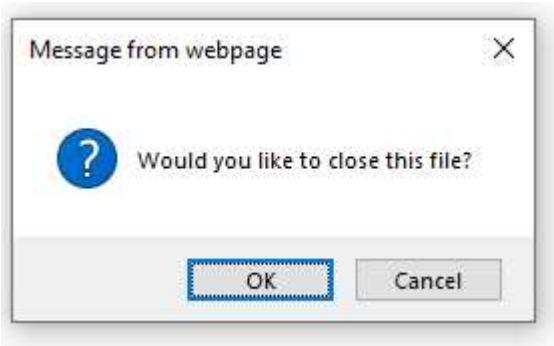

3. PROMPT Dialog Box:

When you want to get the value from user at that time, the prompt dialog box is used. Prompt dialog box will display with a pre-defined message, a text box for user input and with two command buttons.(OK,CANCEL). When a prompt dialog box pops up, the user will have to click either OK or CANCEL button to proceed after entering input value. If the user clicks OK, then the value that user entered will stored inside the variable. If the user clicks CANCEL, "NULL" will stored inside the variable.

Use of Prompt dialog box:

In online games, ask for end user to enter name.

⇨ **Syntax:**

```
var name=prompt("Message","default value");
```

Atmiya University Rajkot

❖ **Example:**

```
<html>
        <body>
         <script language="JavaScript">
                nm=prompt("Enter your name here :","")
          </script>
        </body>
</html>
```

Output:

Decision Statements

Some times when you write code, you want to perform different actions for different decisions, at that time you can use conditional statements in your code. JavaScript provides a complete range of basic programming constructs. They are as given below:

If statement	Use this statement if you want to execute some code only if a specified condition is true.
If …else statement	Use this statement if you want to execute some code if the true and another code if the condition is false.
If…else if…else statement	Use this statement if you want to select one or many blocks of code to be executed.
Switch statement	Use this statement if you want to select one of many blocks of code to be executed.

If statement:

You can use the if statement if you want to execute some code only when the condition is true. The block of statements is executed only when the specified condition is true.

⇨ **Syntax:**

```
if (Condition)
{
        Block of statements
}
```

Atmiya University Rajkot

If the condition is evaluated to true than the block of statements will be executed, then control will transfer out of block. If the condition is evaluated to false than the block of code will be skipped and the control will transfer out of block by skipping the block of statements.

❖ **Example:**

```
<script language="JavaScript">
        var a=10,b=20;
        if(a>b)
        {
                document.write("A is big");
        }
</script>
```

If… else statement:

The 'if else' construct is an extension of simple if statement. If…else construct is used to execute some code when the condition is true or false. You can handle the true block or false block with the help of if… else construct.

⇨ **Syntax:**

```
if(condition)
{
        Code for true part
}
else
{
        Code for false part
}
```

If the condition is evaluated to true then the code for true block will be executed. If the condition is evaluated to false then by skipping the true block the control will transfer in else part and the code for false block will be executed.

❖ **Example:**

```
<script language="JavaScript">
        var a=20,b=10;
        if (a>b)
        {
                document.write("A is Big");
        }
        else
        {
                document.write("B is Big");
        }
</script>
```

Atmiya University Rajkot

if…else if…else statement:

You can use the if…else if…else statement if you want to select one of many sets of lines to execute. This structure gives you facility to specify the condition with each else statement.

⇨ **Syntax:**

```
if(condition1)
{
        code for block 1
}
else if (condition 2)
{
        code for block 2
}
else
{
        code to be executed if both condition are not true.
}
```

In this structure the condition 1 will be evaluated first, if the condition 1 is evaluated to true then the code for block 1 will be execute. If the condition 1 is evaluated to true then and then the control proceeds to the condition 2. As soon as the true condition is found then the respected block of code will be executed and then control will go out of the whole if..else if…else block. If all the conditions are evaluated to false then the final else block will be executed.

Switch statement

You should use the switch statement if you want to select one of many blocks of code to be executed. First we have a single expression that is evaluated once. The value of the expression is then compared with the values for each case in the structure. If there is a match, the block of code associated with that case is executed. Use break to prevent the code from running into the next case automatically. If expression is not match with any case then default block is executed.

⇨ **Syntax:**

```
switch(n)
{
    case 1:
        Code block 1
        break;
    case 2:
        Code block 2
        break;
    default:
        Code to be executed if n is different from case 1 & 2.
}
```

Atmiya University Rajkot

❖ **Example:**

```
<script language="JavaScript">
        switch(ch)
        {
                case '1':
                        c=a+b;
                        document.write("Addition is"+c);
                        break;
                case '2':
                        c=a-b;
                        document.write("Subtraction is"+c);
                        break;
                case '3':
                        c=a*b;
                        document.write("Mulitplication is"+c);
                        break;
                default:
                        document.write("Invalid choice");
        }
</script>
```

Looping Structure in Java script:

What is Loop?

When you want to perform a particular task no. of times at that time the concepts of loop is used. JavaScript supports 3 types of looping structure they are as given below:

1) While()
2) Do…while()
3) For()

1) While () Statement:

The while() statement is the simplest one from all among the looping structure. The while statement is used to execute the statements when the condition is evaluated to true. This is also known as an "Entry Controlled Looping Statement" because the condition is evaluated first and if the condition is evaluated to true then & then the body of the loop will be executed.

⇨ **Syntax:**

```
While (Condition)
{
        Body of the Loop
}
```

Atmiya University Rajkot

❖ **Example:**

```
<script language="JavaScript">
        var x=1;
        while(x<=10)
        {
                document.write("<br>"+x);
                x++ ;
        }
</script>
```

2) Do…while() statement:

The do…while() statement is used to execute the statements no. of times as same as while() statement. But the difference is that the location of condition. This is the reason that's why it is called "Exit control Loop statement".

⇨ **Syntax:**

```
do
{
        Body of the Loop
}while (Condition);
```

❖ **Example:**

```
<script language="JavaScript">
        var x=1;
        do
        {
                document.write("<br>"+x);
                x+= 2;
        }while(x<=20);
</script>
```

3) For() statement:

The for() statement is another "Entry Controlled Loop" statement. It is used when you know in advanced how many times you want to iterate the loop. It allows to specify intitialization, testing and increment/decrement, just within a single line of statement.

⇨ **Syntax:**

```
for (initialization;condition;incre/decre )
{
        body of the loop
}
```

Atmiya University Rajkot

❖ **Example:**

```
<script language="JavaScript">
        for(i=0;i<=5;i++)
        {
                document.write("Atmiya <br>")
        }
</script>
```

Array in Java script:

An Array is an ordered set of values that we refers with its name and index. JavaScript does not have any explicit array data type. However, we can use the predefined Array Object and its methods to work with arrays in our Application. The array object has so many methods for manipulating arrays in various ways. The array object is used to store set of values in single variable name. The array Literals are also Array Object.

Creating an Array:

We can create array object in either of three ways:

⇨ **Syntax:**

1) arrayObjectName = new Array()
2) arrayObjectName = new Array(arrayLength)
3) arrayObjectName = new Array(Element0, Element1,..,Element N)

arrayObjectName : It is either the name of a new Object or existing Object.
arrayLength : It is an initial length of array.
Element 0, Element 1 : It is a list of values for array elements.

❖ **Example:**

```
var emp = new Array()
emp[0] = "Atmiya"
emp[1] = "Virani"
document.write("<br>First Employee Name : "+emp[0])
document.write("<br>Second Employee Name : "+emp[1])
document.write("<br>Third Employee Name : "+emp[2])
```

Output:

```
Atmiya
Virani
Undefine
```

✓ **Populating an Array:**

We can populate an array by assigning values to its elements. The values which we can assign to its elements may be string and numbers.

❖ **Example:**

```
var myArray = new Array("AAA",12,"bbb");
```

Atmiya University Rajkot

✓ **Accessing an Array:**
We can refer to a particular element in an array by referring to the name of array and index number.

User Define Functions in Java script:

What is Function?

"Function" is self-contain block of statements that perform a particular task. Function provides the ability to combine no. of statements in single unit. JavaScript provides Functions through which you can perform certain task. JavaScript allows users to create our own Functions, are called "User Defined Functions". User Defined Function first need to be declared after that function can be invoked by calling it using its name when it was declared. The data needed to execute a function is passed as a Parameter.

⇨ **Syntax:**

```
function function-name(parameter list)
{
        block of statements
        [return statement]
}
```

- Functions are declared and created using "**function"** keyword.
- "**function-name**" is the appropriate name of the function.
- **parameter-list**" are optional and passed to the function appears in parentheses and commas separate member of list.
- "**return**" statement can be used to return any valid expression that evaluates a single value.

❖ **Example:**

```
<html>
  <head>
      <script language="javacript">
            function displayMsg( )
            {
                  alert("Welcom to ATMIYA University");
            }
      </script>
  </head>
  <body>
      <script language="JavaScript">
            displayMsg()
      </script>
  </body>
</html>
```

Atmiya University Rajkot

✓ **Note:** A function code will be executed only by …
When user fires any event.
When a call to that function (anywhere within a page).

Scope of Variables in Functions:

The variable declared or assigned outside the function, is called "Global variable".
The variable declared or assigned inside the function, is called "Local variable".

❖ **Example:**

```
<script language="JavaScript">
        var x = 10;     // global variable
        function scope()
        {
                var y = 20;  // local variable
                document.write(y);          // 20
                document.write(x);          // 10
        }
        document.write(y);                  //undefined.
        document.write(x);                  //10
</script>
```

✓ **Passing parameters and Return values:**
We can pass no. of parameters inside the function and we can return values also.

❖ **Example:**

```
<html>
        <head>
                <script>
                        function scope(a,b)
                        {
                                c = a+b;
                                return  c ;
                        }
                </script>
        </head>
        <body>
                <script>
                        c = scope(10,20);
                        document.write("Sum : "+c);
                </script>
        </body>
</html>
```

Atmiya University Rajkot

TYPES OF FUNCTION

- Function Without Argument and Without Return Value
- Function With Arguments Without Return Value
- Function With Arguments With Return Value
- Function Without Arguments With Return Value

✓ **Function without argument and without return value**

```
<body>
    <script language="JavaScript">
        var name=""
        function hello()
        {
            name = prompt("Enter your name")
            alert("Welcome " + name)
        }
        function bye()
        {
            alert("Good bye " + name)
        }
        hello()
        bye()
    </script>
</body>
```

✓ **Function with arguments and without return value**

```
<body>
    <script language="JavaScript">
        var name=""
        function hello(name)
        {
            alert("Welcome " + name)
        }
        function bye(name)
        {
            alert("Good bye " + name)
        }
        hello("World")
        name="Friends"
        bye(name)
    </script>
</body>
```

Atmiya University Rajkot

✓ **Function with arguments with return value**

```
<body>
    <script language="JavaScript">
        var name=""
        function hello(usrname)
        {
            return usrname+" Atmiya"
        }
        name=hello("Welcome")
        document.write(name)
    </script>
</body>
```

✓ **Function without arguments with return**

```
<body>
    <script language="JavaScript">
        var name=""
        function hello()
        {
            return "Atmiya"
        }
        name=hello()
        document.write(name)
    </script>
</body>
```

Built-in Functions

➢ **eval() :**

The eval() function evaluates a string without reference to a particular objects.

⇨ **Syntax:**

eval(string-expression)

❖ **Example:**

```
<script language="JavaScript">
    var no1 = prompt("Enter First Value");
    var no2 = prompt("Enter Second Value");
    sum = eval(no1) + eval(no2);
    document.write("Sum : "+sum);
</script>
```

➢ **parseInt():**

The parseInt() function parses a string and returns an integer.

⇨ **Syntax:**

parseInt(string)

Atmiya University Rajkot

❖ **Example:**

```
<script language="JavaScript">
    document.write(parseInt("15") + "<br>");
    document.write(parseInt("15.34") + "<br>");
    document.write(parseInt("25  35  45") + "<br>");
    document.write(parseInt(" 100 ") + "<br>");
    document.write(parseInt("30 years") + "<br>");
    document.write(parseInt("Hello") + "<br>");
    document.write(parseInt("015") + "<br>");
</script>
```

Output:

```
15
15
25
100
30
NaN
15
```

➢ **parseFloat():**

The parseFloat() function parses a string and returns a floating point number. This function determines if the first character in the specified string is a number. If it is, it parses the string until it reaches the end of the number, and returns the number as a number, not as a string.

⇨ **Syntax:**

```
parseFloat(string);
```

❖ **Example:**

```
<script type="text/JavaScript">
    document.write(parseFloat("15") + "<br>");
    document.write(parseFloat("15.46") + "<br>");
    document.write(parseFloat("35 45 55") + "<br>");
    document.write(parseFloat(" 100 ") + "<br>");
    document.write(parseFloat("30 years") + "<br>");
    document.write(parseFloat("Hello") + "<br>");
</script>
```

Output:

```
15
15.46
35
100
30
NaN
```

Atmiya University Rajkot

JavaScript Objects

What is Object?

"Object" is just a special kind of data. Each Object has its own state and behavior. State of the Object refers as Property. Behavior of the Object refers as Methods.

Properties:

Properties are used to define the characteristics of an Object. Properties are used to access the data values present in the object.

To access the property of an Object:

objectName.propertyName

Methods:

Methods are the actions that can be performed on Objects. Object's behavior, we can change by using accessing their methods.

To access the method of an Object:

objectName.methodName

JavaScript is object-oriented scripting language. So JavaScript allows you to use with objects. JavaScript provides two types of Objects.

Built-In Objects: JavaScript provides two types of Built-In Objects.

- Native Objects
  - String Object
  - Math Object
  - Array Object
  - Date Object
- Browser Objects
  - Window Object
  - History Object
  - Location Object
  - Screen Object
  - Navigator Object
  - Document Object

Built-In Objects :

- **String Object:**

This object is used to manipulate the String.

Property:

Length	Returns the no. of characters in a String.

Atmiya University Rajkot

Methods:

- bold:
- italics:
- strike:
- sup:
- sub:
- fontcolor:
- fontsize:
- link:
- blink:
- charAt:
- concat:
- indexOf:
- lastIndexOf:
- match:
- replace:
- search:
- slice:
- substr:
- substring:
- toLowercase:
- toUppercase:

- **Bold:** This method is used to display a string in a bold font.
  - ⇨ **Syntax:**

    Stringobject.bold()
- **Italics:** This method is used to display a string in italics font.
  - ⇨ **Syntax:**

    Stringobject.italics()
- **Big:** This method is used to display a string in big font.
  - ⇨ **Syntax:**

    Stringobject.big()
- **Small:** This method is used to display a string in small font.
  - ⇨ **Syntax:**

    Stringobject.small()
- **Sub:** This method is used to give subscript effect to the string.
  - ⇨ **Syntax:**

    Stringobject.sub()
- **Sup:** This method is used to give superscript effect to the string
  - ⇨ **Syntax:**

    Stringobject.sup()
- **Fontsize:** This method is used to specify the size of font.
  - ⇨ **Syntax:**

    Stringobject.fontsize(size)
- **Fontcolor:** This method is used to specify the color of font.
  - ⇨ **Syntax:**

    Stringobject.fontcolor(color)
- **Blink:** This method is used to display a blinking string. It can't support by the internet explorer.
  - ⇨ **Syntax:**

    Stringobject.blink()

Atmiya University Rajkot

- **Link:** This method is used to display a string as a hyperlink.
  - **Syntax:**

    Stringobject.link()
- **Strike:** This method is used to give strikethrough effects to the string.
  - **Syntax:**

    Stringobject.strike()

  - **Example of all above String method:**

```
<script language="JavaScript">
        var myString = "ATMIYA University"
        var myString2 = " Happy World"
        var str="st";
        var str1="2";
        document.write("My String is: "+myString);
        document.write("Bold: "+myString.bold());
        document.write("Italics: "+myString.italics());
        document.write("Strike: "+myString.strike());
        document.write("Superscript: 1"+str.sup());
        document.write("Subscript: H"+str1.sub()+"O");
        document.write("FontColor:"+myString.fontcolor("red"));
        document.write("FontSize: "+myString.fontsize(15));
        document.write("Link:"+myString.link("JavaScript") );
</script>
```

- **CharAt:** The charAt () method is used to find the character at specified position.

  This method is case sensitive.
  - **Syntax:**

    Stringobject.charAt(index)
  - **Example:**

```
Var str="My string"
document. write(charAt(3));
```

  - **Output:**

    S
- **Concat:** This method is used to concat (merge) two or more strings.
  - **Syntax:**

    Stringobject.concat (stringX,stringX,……X)
  - **Example:**

```
Var st1="This is"
Var st2=" Computer"
document.write(st1.concat(st2))
```

  - **Output:**

    This is computer

Atmiya University Rajkot

- **indexOf:** This method returns the position of the first occurrence of a specified string value in a string object. It is case sensitive. Returns -1 if no match found.
  - **Syntax:**

    Stringobject.indexOf(stringvalue,startIndex)

    Here the string value is required and start index is optional.
  - **Example:**

    ```
    var str = "ATMIYA";
    document.write(str.indexOf("M"));
    ```
  - **Output:**

    2
- **lastIndexOf:** This method returns position of the last occurrence of a specified string value. It is case sensitive. It returns -1 if no match found.
  - **Syntax:**

    Stringobject.lastIndexOf(stringValue,startIndex)
  - **Example:**

    ```
    var str="Hello World"
    document.write(str.lastIndexOf("o"))
    ```
  - **Output:**

    7
- **Match:** It searches for specified string value in a string. It is similar to indexOf() and lastIndexOf(), but returns specified string, instead of position of the string. It is case sensitive method. Returns null if no match found.
  - **Syntax:**

    stringObject.match(search value)
  - **Example:**

    ```
    var str="Have A Nice Day";
    document.write(str.match("Nice"))
    document.write(str.match("nice"))
    ```
  - **Output:**

    Nice

    Null
- **Replace:** The replace() method is used to replace some characters with some other characters in a string. The replace() method is case sensitive.
  - **Syntax:**

    stringObject.replace (findstring, newstring)
  - **Example:**

    ```
    var str="Play Cricket!";
    document.write (str.repalce ("Cricket","Chess"))
    ```
  - **Output:**

    Play Chess!

Atmiya University Rajkot

- **Search:** The search() method is used to search a string for specified value. The search() method returns the position of the specified value in the. If no match was found it returns -1. This method is case sensitive.
  - **Syntax:**

    StringObject.search(searchvalue)
  - **Example:**

    var str="Have a nice day"
    document.write (str.search ("day"))
  - **Output:**

    12

- **Slice:** The slice() method extracts a part of a string and returns the extracted part in a new string. You can use negative numbers to select from the end of the string. If the end is not specified, slice() selects all characters from the specified start position and to the end of the string.
  - **Syntax:**

    stringObject.slice(start,end)
  - **Example:**

    var str="Hello, How are you?"
    document.write(str.slice(7));
    document.write(str.slice(7,12));
  - **Output:**

    How are you?
    How a

- **Substr:** The substr() method extracts a specified number of characters in a string. To extracts from the end of the string, use a negative start number. The start index starts at 0. If the length parameter is omitted, this method extracts to the end of the string.
  - **Syntax:**

    stringObject.substr(start,length)
  - **Example:**

    var str="Good Morning";
    document.write(str.substr(3));
    document.write(str.substr(3,7));
  - **Output:**

    d Morning
    d Morni

- **Substring:** The substring () method extracts the characters in a string between two specified indices. To extract the character from the end of the string, use negative start number. The start index starts at 0. If the stop parameter is omitted, this method extracts to the end of the string.

Saurashtra University Rajkot

- **Syntax:**

```
stringObject.substring(start,stop)
```

- **Example:**

```
var str="Hello world";
document.write(str.substr(3))
document.write(str.substr(7,3))
```

- **Output:**

```
lo world
lo w
```

- **toLowerCase:** The toLowerCase() method is used to display a string in lowercase letters.
  - **Syntax:**

```
stringObject.toLowerCase()
```

  - **Example:**

```
var str="Hello World!"
```

  - **Output:**

```
hello world!
```

- **toUpperCase:** The toUpperCase() method is used to display a string in up-percase letters.
  - **Syntax:**

```
stringObject.toUpperCase()
```

  - **Example:**

```
var str="Hello World!"
```

  - **Output:**

```
HELLO WORLD!
```

STRING OBJECT PROPERTY:

- **length:** This property is used to count the length of the specified string.
  - **Syntax:**

```
stringObject.length
```

  - **Example:**

```
var str="Hello World";
```

  - **Output:**

```
11
```

- **Math Object:**

Math Object provides standard library of mathematical constants and functions. The "Constants" are defined as properties of Math Object. The "Functions" are defined as methods of Math Object.

Atmiya University Rajkot

Methods:

- **abs:** It returns absolute value of a number.
  - ⇨ **Syntax:**

    Math.abs(number)
  - ❖ **Example:**

    ```
    document.write(Math.abs(-7.25));
    document.write(Math.abs(7.25));
    ```

- **ceil:** It returns value of number rounded UPWARDS to the nearest integer.
  - ⇨ **Syntax:**

    Math.ceil(number)
  - ❖ **Example:**

    ```
    document.write(Math.ceil(0.60))
    document.write(Math.ceil(0.40))
    document.write(Math.ceil(- 5.1))
    document.write(Math.ceil(5.1))
    ```

- **floor:** It returns the value of number rounded DOWNWARDS to the nearest integer.
  - ⇨ **Syntax:**

    Math.floor(number)
  - ❖ **Example:**

    ```
    document.write(Math. floor (0.40))
    document.write(Math. floor (- 5.1))
    document.write(Math. floor (5.1))
    ```

- **cos:** It returns the value of cosine of number. It returns numeric value between -1 to 1.
  - ⇨ **Syntax:**

    Math.cos (number)
  - ❖ **Example:**

    ```
    document.write(Math.cos (3))
    ```

- **sin:** It returns the value of sine of a number. It returns the numeric value between -1 to 1.
  - ⇨ **Syntax:**

    Math.sin(number)
  - ❖ **Example:**

    ```
    document.write(Math.sin (3))
    ```

- **tan:** It returns the number that represents tangent of an angle.
  - ⇨ **Syntax:**

    Math.tan(number)
  - ❖ **Example:**

    ```
    document.write(Math.tan (1))
    ```

Atmiya University Rajkot

- **log:** It returns the natural log (base E) of number. If the number is negative(-), NaN is returned.
  - **Syntax:**
    Math.log(number)
  - **Example:**
    document.write(Math.log(1))

- **pow:** It returns the value of X to power of Y.
  - **Syntax:**
    Math.pow(x,y)
  - **Example:**
    document.write(Math.pow(2,3));
    document.write(Math.pow(5,2));

- **random:** It returns a random number between 0 to 1.
  - **Syntax:**
    Math.random()
  - **Example:**
    document.write(Math.random());

- **max:** It returns the number with highest value of two specified numbers.
  - **Syntax:**
    Math.max(x,y)
  - **Example:**
    document.write(Math.max(10,15));

- **min:** It returns the number with lowest value of two specified numbers.
  - **Syntax:**
    Math.min(x,y)
  - **Example:**
    document.write(Math.min(10,15));

- **round:** It rounds the number to nearest integer.
  - **Syntax:**
    Math.round(number)
  - **Example:**
    document.write(Math.round(0.60));
    document.write(Math.round(0.49));

- **sqrt:** It returns the square root of a number.
  - **Syntax:**
    Math.sqrt(number)
  - **Example:**
    document.write(Math.sqrt(16));

Atmiya University Rajkot

Array Object

An array is the collection of elements having similar datatypes or we can say that array provides the facility to store multiple values in single variable name.

Property:

- **length:**
  - It returns the length of the Array.

Syntax:

```
ArrayObject.length
```

Example:

```
<script languagae="javacript">
        var subArr = new Array()
        arr[0] = "PHP"
        arr[1] = "C"
        arr[2] = "VB"
        document.write(subArr.length)
</script>
```

Output:

```
3
```

Methods:

- **concat():** It is used to join two or more Arrays. This method does not change the original arrays. It only returns a copy of joined arrays.

Syntax:

```
ArrayObject.concat()
```

Example:

```
<script languagae="javacript">
        var subArr = new Array()
        subArr[0] = "PHP"
        subArr[1] = "C"
        subArr [2] = "VB"
        var moreArr = new Array()
        moreArr[0] = "Java"
        moreArr[1] = "Oracle"
        document.write(subArr.concat(moreArr))
        document.write(subArr.length)
</script>
```

Output:

```
PHP,C,VB,Java,Oracle
3
```

- **join():** It is used to put all the elements of array into string. The elements will be seprated by Seprator, comma(,) is default if you omitted the parameter.

Syntax:

```
ArrayObject.join(seprator)
```

Saurashtra University Rajkot

❖ **Example:**

```
<script languagae="javacript">
    Var subArr = new Array()
    arr[0] = "PHP"
    arr[1] = "C"
    arr[2] = "VB"
    document.write(subArr.join(":"))
</script>
```

Output:

```
PHP:  C :VB
```

- **pop():** It is used to remove and return "Last Element" of Array. This method changes the length of original Array.

⇨ **Syntax:**

```
ArrayObject.pop()
```

❖ **Example:**

```
<script languagae="javacript">
    var subArr = new Array()
    arr[0] = "PHP"
    arr[1] = "C"
    arr[2] = "VB"
    document.write(subArr.pop())
</script>
```

Output:

```
VB
```

- **shift():** It is used to remove and return "First Element" of Array. This method changes the length of original Array.

⇨ **Syntax:**

```
ArrayObject.shift()
```

❖ **Example:**

```
<script languagae="javacript">
    var subArr = new Array()
    arr[0] = "PHP"
    arr[1] = "C"
    arr[2] = "VB"
    document.write(subArr.shift())
</script>
```

Output:

```
PHP
```

- **push():** It is used to add one or more elements to end of the Array and returns new length.

⇨ **Syntax:**

```
ArrayObject.push(newElement1,newElement2,…)
```

Atmiya University Rajkot

❖ **Example:**

```
<script languagae="javacript">
        var subArr = new Array()
        arr[0] = "PHP"
        arr[1] = "C"
        arr[2] = "VB"
        document.write(subArr.push("java"))
</script>
```

Output:

```
4
```

- **unshift():** It is used to add one or more elements to the beginning of the Array and returns new length.

⇨ **Syntax:**

```
ArrayObject.unshift(newElement1,newElement2,…)
```

❖ **Example:**

```
<script languagae="javacript">
        var subArr = new Array()
        arr[0] = "PHP"
        arr[1] = "C"
        arr[2] = "VB"
        document.write(subArr.unshift("oracle"))
</script>
```

Output:

```
4
```

- **reverse():** It is used to reverse the order of elements in Array. It changes the original Array.

⇨ **Syntax:**

```
ArrayObject.reverse()
```

❖ **Example:**

```
<script languagae="javacript">
        var subArr = new Array()
        arr[0] = "PHP"
        arr[1] = "C"
        arr[2] = "VB"
        document.write(subArr.reverse())
</script>
```

Output:

```
VB,C,PHP
```

- **slice():** It is used to extract a section of an Arrya and returns a new Array.

⇨ **Syntax:**

```
ArrayObject.slice(start_index,end_index)
```

Atmiya University Rajkot

❖ **Example:**

```
<script languagae="javacript">
    var subArr = new Array()
    arr[0] = "PHP"
    arr[1] = "C"
    arr[2] = "VB"
    document.write(subArr.slice(0,1))
</script>
```

Output:

```
PHP
```

- **sort():** It is used to sort the elements of an Array. This method will sort the elements alphabetically by default. Numbers will not be sorted correctly. To sort numbers, we must create function that compare numbers. After sort() method, Array is changed.

⇨ **Syntax:**

```
ArrayObject.sort()
```

❖ **Example:**

```
<script languagae="javacript">
    var subArr = new Array()
    arr[0] = "PHP"
    arr[1] = "C"
    arr[2] = "VB"
    document.write(subArr.sort())
</script>
```

Output:

```
C,PHP,VB
```

➢ **DATE OBJECT:**

JavaScript does not have the datatype as Date. However, we can use Date object & it's methods to work with dates and times. Some important things about methods of date object.

Seconds & minutes	0 to 59
Hours	0 to 23
Day	0(Sunday) to 6(Saturday)
Date	1 to 31
Month	0(January) to 11 (December)
Year	Years since 1900

Methods:

- **Date():** This method returns today's date and time.

⇨ **Syntax:**

```
dateObject.Date()
```

Atmiya University Rajkot

❖ **Example:**

```
var d=new Date()
document.write(d.Date())
```

- **getDate():** The getDate() method returns the day of the month. The value returned by getDate() us a number between 1 and 31. This method is always used in conjunction with a Date object.

  ⇨ **Syntax:**

  ```
  dateObject.getDate()
  ```

  ❖ **Example:**

  ```
  Var d=new Date()
  document.write(d.getDate())
  ```

- **getDay():** The getDay() method returns a number that represents the day of the week. The value returned by getDay() is a number between 0 and 6. Sunday is 0, Monday is 1 and so on. This method is always used in conjunction with a Date.

  ⇨ **Syntax:**

  ```
  dateObject.getDay()
  ```

  ❖ **Example:**

  ```
  Var d=new Date()
  document.write(d.getDay())
  ```

- **getMonth():** The getMonth() method reurns the month as a number.
  - The value returned by the getMonth() is a number between 0 and 11. January is 0 and February is 1 and so on..
  - This method is always used in conjunction with a Date object.

  ⇨ **Syntax:**

  ```
  dateObject.getMonth()
  ```

  ❖ **Example:**

  ```
  Var d=new Date()
  document.write(d.getMonth())
  ```

- **getYear():** The getYear() method returns the month, as a number. The value returned by getMonth() is a number between 0 & 11. January is 0, February is 1 and So on. This method is always used in conjunction with date object.

  ⇨ **Syntax:**

  ```
  dateObjecct.getYear()
  ```

  ❖ **Example:**

  ```
  var d=new Date()
  document.write(d.getYear())
  ```

- **getFullYear():** The getFullYear() method returns a four digit number that represents a year. This method is always used in conjunction with a date object.

Atmiya University Rajkot

- **Syntax:**

```
dateObject.getFullYear()
```

- **Example:**

```
Var d=new Date()
document.write(d.getFullYear())
```

- **getHours():** The getHours() method returns the hour of a time. The value returned by this method is a number that represents the Hour of a day. This method is always used in conjunction with date object.
  - **Syntax:**

```
dateObject.getHours()
```

  - **Example:**

```
var d=new Date()
document.write(d.getHours())
```

- **getMinutes():** The getMinutes() method returns the minutes of a time. The value returned by the getMinutes() is a number that represents minutes of a current Hour. This method is used with conjunction with the date object.
  - **Syntax:**

```
dateObject.getMinutes();
```

  - **Example:**

```
var d=new Date();
document.write(d.getMinutes());
```

- **getSeconds():** This method returns the seconds of a time. The value returned by this method is a number that represents the second of a current time. This method is always used in conjunction with date object.
  - **Syntax:**

```
dateObject.getSeconds();
```

  - **Example:**

```
var d=new Date();
document.write(d.getSeconds());
```

- **getMilliseconds():** The getMilliseconds() returns the milliseconds of a time. The value returned by this method is a number that represents a milliseconds of a current time. This method is always used in conjunction with date object.
  - **Syntax:**

```
dateobject.getMilliseconds()
```

  - **Example:**

```
var d=new Date()
document.write(d.getMilliseconds())
```

- **getTime():** The getTime() returns the number of milliseconds since midnight of January 1, 1970. This method is always used in conjunction with Date object.
  - **Syntax:**

```
dateObject.getTime()
```

Atmiya University Rajkot

❖ **Example:**

```
var d=new Date()
document.write(d.getTime())
```

- **setDate():** The setDate() method is used to set the day of the month. The value set by setDate() is a number between 1 and 31, that represents the day number of month. This method is always used in conjunction with Date object.

  ⇨ **Syntax:**

  ```
  dateObject.setDate(day)
  ```

  ❖ **Example:**

  ```
  var d=new Date()
  d.setDate(4)
  ```

- **setMonth():** The setMonth() method is used to set the month. You can set month by specifying the value of month and value of day. The month value in setMonth() is a number between 0 and 11. January is 0, February is 1 and so on… and the day value in setMonth() is a number between 1 and 31, represents the day of month. This method is always used in conjunction with Date object. Here the parameter day is optional and month is required.

  ⇨ **Syntax:**

  ```
  dateObject.setMonth(month,day);
  ```

  ❖ **Example:**

  ```
  var d=new Date()
  d.setMonth(8)
  ```

- **setFullYear():** The setFullYear() method is used to set the year. You can set the year by specifying the year, month and day value. The year value represents the four digit value specifies the year. The month value represents the number between the 0 and 11 specifies the month. The day value represents the number between 1 and 31, specifies the date. Here the parameter year is required and month and day are optional.

  ⇨ **Syntax:**

  ```
  dateObject.setFullYear(year,month,day);
  ```

  ❖ **Example:**

  ```
  var d=new Date();
  d.setFullYear(2009);
  ```

- **setYear():** The setYear() method is used to set the year. The value set by the setYear() is a numeric value that represents the year value. Always used in conjunction with date Object.

  ⇨ **Syntax:**

  ```
  dateObject.setYear(year);
  ```

Atmiya University Rajkot

❖ **Example:**

```
var d=new Date();
d.setYear(year);
```

- **setHours():** The setHours() method is used to set the hour of a specified time. You can set hours by specifying the values of hours, minutes, seconds and milliseconds. Here the parameter hours is required. Whereas minutes, seconds, milliseconds are optional. Always used in conjunction with date object.

  ⇨ **Syntax:**

  ```
  dateObject.setHours(hour,minutes,seconds,millisec);
  ```

  ❖ **Example:**

  ```
  var d=new Date();
  d.setHours(10);
  ```

- **setMinutes():** The setMinutes() method is used to set the minutes of a specified time. You can set the minutes by specifying the values of minutes, seconds and milliseconds. Here the parameter minute is required whereas seconds and milliseconds are optional. Always used in conjunction with date object.

  ⇨ **Syntax:**

  ```
  dateObject.setMinutes(minute,seconds,milliseconds)
  ```

  ❖ **Example:**

  ```
  var d=new Date()
  d.setMinutes(20)
  ```

- **setSeconds():** The setSeconds() method is used to set the seconds of a specified time. You can set the seconds by specifying the values of seconds and milliseconds. Here the parameter second is required and millisecond is optional. Always used in conjunction with date Object.

  ⇨ **Syntax:**

  ```
  dateObject.setSeconds(seconds,milliseconds)
  ```

  ❖ **Example:**

  ```
  var d=new Date()
  d.setSeconds(20)
  ```

➢ **Window Object**

When you load your browser application, a window immediately appears. This window is known as browser window or window in short. You can use JavaScript to open a window, as the result of a button click or any other operation. Since each window is represented as a distinct window object, opening a new window actually creates another window object.

Atmiya University Rajkot

- **CREATE A WINDOW**

  windowVar=[window].open("URL","WindowName", [Window Attributes],height,width)

Window Attribute	Description
Toolbar	Back, forward and other buttons button
Location	Address bar displaying the current URL
Directories	What's new, What's Cool and other buttons in that row
Status	Status bar at the bottom of the window
Menubar	Displays menu bar to the window (File, Edit, View…)
Scrollbars	Displays scroll bar to the window
Resizable	Allows resizing of the window
Width	Windows width in pixel
Height	Windows height in pixel

❖ **Example:**

```
<html>
 <head>
      <script type="text/JavaScript">
         function open_win()
         {
             window.open("","my1","menubar,status,toolbar,height=
             100,width=500");
             window.open("","my2","fullscreen,menubar,status,toolbar");
         }
      </script>
  </head>
  <body>
       <form>
         <input type=button value="OpenWindow"onclick="open_win()">
      </form>
 </body>
</html>
```

Atmiya University Rajkot

❖ **Example 1:**

```
<head>
        <script type="text/JavaScript">
                function closeWin()
                {
                        xyz.close();
                }
        </script>
</head>
<body>
        <script type="text/JavaScript">
                xyz=window.open('','',width=200,height=100);
                xyz.document.write("This is my Window");
        </script>
        <form>
                <input type="button" value="Close 'myWindow'"
                onclick="closeWin()">
        </form>
</body>
```

❖ **Example 2:**

```
<head>
<script type="text/JavaScript">
        function resizeWindow1()
        {
                window.resizeBy(-100,-100);
   /*method is used to resize a window by the specified pixels*/
        }
        function resizeWindow2()
        {
                window.resizeTo(500,300)
    /*method is used to resize the window to the specified
    width and height.*/
        }
</script>
</head>
<body>
        <form>
                <input type="button" onclick="resizeWindow1()"
                        value="Resize window By">
                <input type="button" onclick="resizeWindow2()"
                        value="Resize window To">
        </form>
</body>
```

Atmiya University Rajkot

History Object

- The browser maintains a list of most recent URL's, which can be viewed in IE as well as Netscape. The history list behaves like a LIFO queue (Last In First Out).
- The history list is represented in JavaScript by the window.history object. It allows u to deal with list but not with the data.

History Attribute	Description
length[property]	Returns the number of elements in the history list
back()	Loads the previous URL in the history list
forward()	Loads the next URL in the history list
go()	Loads a specific page in the history list

❖ **Example:**

```
<html>
  <head>
    <script language = "JavaScript">
        function ShowHistory()
        {
            alert("U have accessed " + history.length +   " Web Pages ")
        }
    </script>
  </head>
  <body onload="ShowHistory()">
  </body>
</html>
```

❖ **Example:**

```
<html>
  <head>
      <script type="text/JavaScript">
            function goBack()
            {
                history.forward()
            }
      </script>
  </head>
  <body>
            <input type="button"  value="Back"  onclick=goBack()>
  </body>
</html>
```

Atmiya University Rajkot

❖ **Example:**

```
<html>
  <head>
    <script type="text/JavaScript">
      function goBack()
       {
            history.go(-3)
       }
    </script>
  </head>
   <body>
      <input type="button" value="Back" onclick=goBack()>
   </body>
</html>
```

➢ **Location Object**

The Location object is actually a JavaScript object, not an HTML DOM object. The Location object is automatically created by the JavaScript runtime engine and contains information about the current URL.

The Location object is part of the Window object and is accessed through the window.location property.IE: Internet Explorer, F: Firefox, O: Opera.

Attribute	Description
hash	Sets or returns the URL from the hash sign (#)
host	Sets or returns the hostname and port number of the current URL
hostname	Sets or returns the hostname of the current URL
href	Sets or returns the entire URL
pathname	Sets or returns the path of the current URL
port	Sets or returns the port number of the current URL
protocol	Sets or returns the protocol of the current URL
search	Sets or returns the URL from the question mark (?)
assign()	Loads a new document
reload()	Reloads the current document
replace()	Replaces the current document with a new one

Atmiya University Rajkot

❖ **Example:**

```
<html>
  <head>
    <script type="text/JavaScript">
      function newDoc()
      {
                window.location.assign("http://www.yahoo.com")
      }
    </script>
  </head>
  <body>
      <input type=button  value="Load new document” onclick=newDoc()>
  </body>
</html>
```

❖ **Example:**

```
<html>
      <body>
            <script type="text/JavaScript">
                  function reloadPage()
                  {
                        window.location.reload()
                  }
            </script>
            <input type=button  value="Reload page"  onclick=reloadPage()>
      </body>
</html>
```

❖ **Example:**

```
<html>
      <body>
            <script type="text/JavaScript">
                  function replaceDoc()
                  {
                     window.location.replace("http://www.yahoo.com");
                  }
            </script>
      <input type=button  value="Replace document" onclick=replaceDoc()>
  </body>
</html>
```

Atmiya University Rajkot

❖ **Example:**

```
<html>
        <body>
                <script type="text/JavaScript">
                        document.write(location.search);
                </script>
        </body>
</html>
```

❖ **Example:**

```
<html>
        <body>
                <script type="text/JavaScript">
                        document.write(location.href);
                </script>
        </body>
</html>
```

Question Bank: (1 Mark Questions)

1) JavaScript is a Client Side Scripting Language. (True/False) – **True**
2) There are no need to declare variables, classes or methods in JavaScript. (True/False) – **True**
3) We can add JavaScript in both <Head> and <Body> section. (True/False) – **True**
4) Which tag is used to describe JavaScript statement? – **<script>**
5) Which Literal has only two values like True & False? – **Boolean**
6) How many types of dialog boxes are available in JavaScript? – **3**
7) What is used to break line in message boxes? – **'\n'**
8) Which dialog box is used to display some information on web browser window? – **Alert**
9) Which dialog box is used to verify or accept something from user? – **Confirm**
10) Which dialog box is used to get some input from user? – **Prompt**

Atmiya University Rajkot

11) Which dialog box is return only Boolean datatype value? – **Confirm**

12) Which block is executed in Switch Case when expression is not match with any case? – **Default**

13) Which method is used to merge two or more string in JavaScript? – **Concat**

14) Which property is used in string object? – **Length**

15) What is the document in document.write()?– **Object**

16) What is the write in document.write()? - **Method**

17) What is the output of statement - Math.ceil(-9.7)? – **"–9"**

18) What is the output of statement - Math.floor(-0.9)? – **"–1"**

19) What is the output of statement - Math.random()? – **0.n (any random no)**

20) What is the output of statement - document.write(1 + 2 + "3")? – **33**

21) What is the output of statement - document.write("1" + 2 + 3)? – **123**

22) What is the output of statement - document.write("10" * 2 + 3)? – **23**

23) parseFloat(1 / 2 + "2")=? – **0.52**

24) parseInt(0 * 1 + "2")=? – **2**

25) If x="GUJARAT", What will the output in document.write(x.substr(3,2))? – **AR**

26) Which method is used to remove and return first element of array? – **shift()**

27) Which method is used to remove and return last element of array? – **pop()**

28) Which method is used to add element into end of the array? – **push()**

29) Which method is used to add element into beginning of the array? – **unshift()**

30) If x="ATMIYA University", then output of alert(x.substr(5,9)) is ___. – **A Univers**

Atmiya University Rajkot

Question Bank: (5 Marks Questions)

1) What is JavaScript? How to insert JavaScript into page? (Page No. 74,75)
   Ans. What is JavaScript? – 2 marks
   How to insert – 1 marks
   Where to put JS into web-page. – 2 marks

2) Describe Data types (Literals) in JavaScript. (Page No. 77)
   Ans. Different Literals. – 5 marks

3) Explain Dialog boxes in JavaScript. (Page No. 78)
   Ans. What is dialog box? – 2 marks
   3 types of dialog boxes with an example. – 3 marks

4) Explain four Decision making statement in JavaScript. (Page No. 81)
   Ans. Explanation about decision statement with an example. – 5 marks

5) Explain Looping structure in JavaScript. (Page No. 84)
   Ans. Explanation about looping structure with an example. – 5 marks

6) Explain Array in JavaScript. (Page No. 86)
   Ans. Explanation about Array with an example. – 5 marks

7) Explain any 5 methods of String object with an example. (Page No. 92)
   Ans. Description of methods with example – 5 marks

8) What is Object, Method and Property? Explain method of Math object with an example. (Page No. 92, 97)
   Ans. Object, Method, Property – 2 marks
   Method of Math Object. – 3 marks

9) Explain any 5 methods of Array object with an example. (Page No. 100)
   Ans. Description of methods with example – 5 marks

10) Explain Window and History Object with an example. (Page No. 107,110)
   Ans. Explanation of Window Object – 2 marks
   Explanation of History Object – 3 marks

11) Explain Location Object with its attributes in JS. Describe any two examples of it. (Page No. 111)
   Ans. About Location Object. – 1 marks
   All attributes – 2 marks
   Two examples – 2 marks

Atmiya University Rajkot

Chapter – 5
Events with DOM in JavaScript

EVENTS

What Is an Events?

It describes actions that occur as a result of user interaction with the web page or other browser related activities. When a button is clicked or a mouse has been moved or even when a key has been pressed an event is said to be occurred.

Event Handling

The response in conjunction to the occurrence of events by the web browser is called as event handling.

Event Handler

The code that performs this processing is called event handler.

Mouse Events

onClick:

The onClick event occurs when the user clicks on an element. The onClick event is the most frequently used event type, which occurs when a user clicks the left button of the mouse. You can put your validation, warning etc., against this event type.

❖ **Example:**

```
<script>
        function atmiya()
        {
                alert("Wel-come to ATMIYA University");
        }
</script>
<input type=button value="Atmiya" onClick=atmiya()>
```

onMouseOver

The onMouseOver event occurs when the mouse pointer is moved onto an element of web page.

Atmiya University Rajkot

❖ **Example:**

```
<script>
        function atmiya()
        {
                alert("Wel-come to ATMIYA University");
        }
</script>
<span onMouseOver=atmiya()>Atmiya</span>
```

onMouseOut

The onmouseout event occurs when the mouse pointer is moved out of an element of web page.

❖ **Example:**

```
<script>
        function atmiya()
        {
                alert("Wel-come to ATMIYA University");
        }
</script>
<span onMouseOut=atmiya()>Atmiya</span>
```

onMouseDown

The onmousedown event occurs when a user presses a mouse button over an element. The order of events related to the onmousedown event (for the left/middle mouse button).

❖ **Example:**

```
<script>
        function atmiya()
        {
                alert("Wel-come to ATMIYA University");
        }
</script>
<span onMouseDown=atmiya()>Atmiya</span>
```

onMouseUp

The onmouseup event occurs when a user releases a mouse button over an element after pressing a mouse button. This event trigger after onMouseOver and onMouseDown events.

Atmiya University Rajkot

❖ **Example:**

```
<script>
        function atmiya()
        {
                alert("Wel-come to ATMIYA University");
        }
</script>
<span onMouseUp=atmiya()>Atmiya</span>
```

onMouseMove

The onmousemove event occurs when the pointer is moving while it is over an element of web page.

❖ **Example:**

```
<script>
        function atmiya()
        {
                alert("Wel-come to ATMIYA University");
        }
</script>
<div onMouseMove=atmiya()>Atmiya</div>
```

Keyboard Events

onKeyDown

The onKeyDown event occurs when the user is pressing any key from the keyboard.

❖ **Example:**

```
<script>
        function atmiya()
        {
                alert("Wel-come to ATMIYA University");
        }
</script>
<input onKeyDown=atmiya()>
```

onKeyPress

The onKeyDown event occurs when the user is pressing any key from the keyboard. The onkeypress event is not fired for all keys (e.g. ALT, CTRL, SHIFT, ESC) in all browsers. To detect only whether the user has pressed a key, use the onKeyDown event instead, because it works for all keys.

Atmiya University Rajkot

❖ **Example:**

```
<script>
        function atmiya()
        {
                alert("Wel-come to ATMIYA University");
        }
</script>
<input onKeyPress=atmiya()>
```

onKeyUp

The onKeyUp event occurs when the user releases a key from the keyboard. This event triggers after onkeydown or onkeypress event.

❖ **Example:**

```
<script>
        function atmiya()
        {
                alert("Wel-come to ATMIYA University");
        }
</script>
<input onKeyUp=atmiya()>
```

Other Events

onFocus

The onFocus event occurs when an element gets focus. The onFocus event is most often used with <input>, <select>, and <a>. The onFocus event is the opposite of the onBlur event.

❖ **Example:**

```
<script>
        function atmiya()
        {
                alert("Wel-come to ATMIYA University");
        }
</script>
<input onFocus=atmiya()>
```

onBlur

The onblur event occurs when an object loses focus. The onblur event is most often used with form validation code (e.g. when the user leaves a form field). The onblur event is the opposite of the onfocus event.

Atmiya University Rajkot

❖ **Example:**

```
<script>
        function atmiya()
        {
                alert("Wel-come to ATMIYA University");
        }
</script>
<input onBlur=atmiya()>
```

onChange

The onchange event occurs when the value of an element has been changed. For radiobuttons and checkboxes, the onchange event occurs when the checked state has been changed. This event triggers also on <select> elements and also while elements loses focus.

❖ **Example:**

```
<script>
        function atmiya()
        {
                alert("Wel-come to ATMIYA University");
        }
</script>
<input onChange=atmiya()>
```

onError

The onerror event is triggered if an error occurs while loading an external file (e.g. a document or an image).

❖ **Example:**

```
<script>
        function atmiya()
        {
                alert("Error..!! \n Image could not load.");
        }
</script>
<img src="e:\wrong\path\image.jpg" onError=atmiya()>
```

onLoad

The onload event occurs when an object has been loaded. onload is most often used within the <body> element to execute a script once a web page has completely loaded all content (including images, script files, CSS files, etc.). The onload event can be used to check the visitor's browser type and browser version, and load the proper version of the web page based on the information.

Atmiya University Rajkot

❖ **Example:**

```
<body onLoad=atmiya()>
    <script>
        function atmiya()
        {
            alert("Web-page loading process is completed.");
        }
    </script>
</body>
```

onUnload

The onunload event occurs once a page has unloaded (or the browser window has been closed). onunload occurs when the user navigates away from the page (by clicking on a link, submitting a form, closing the browser window, etc.). The onunload event is also triggered when a user reloads the page (and the onload event).

❖ **Example:**

```
<body onUnload=atmiya()>
    <img src="e:\wrong\path\image.jpg">
    <script>
        function atmiya()
        {
            alert("Web-page could not load successfully.");
        }
    </script>
</body>
```

onResize

The onResize event occurs when the browser window has been resized.

❖ **Example:**

```
<body onResize=atmiya()>
    <script>
        function atmiya()
        {
            alert("You resize your browser window.");
        }
    </script>
</body>
```

Atmiya University Rajkot

onReset

The onReset event occurs when a form is reset using reset button in web page.

❖ **Example:**

```
<form onReset=atmiya()>
        Name : <input><br>
        <input type=reset>
</form>
<script>
        function atmiya()
        {
                alert("Web-page form will be reset.");
        }
</script>
```

onSelect

The onSelect event occurs after some text has been selected in an element. The onSelect event is mostly used on <input type="text"> or <textarea> elements.

❖ **Example:**

```
<input onSelect=atmiya()>
<script>
        function atmiya()
        {
                alert("You select some text from input box.");
        }
</script>
```

onSubmit

The onSubmit event occurs when a form is submitted. This event is triggered only from <form> element.

❖ **Example:**

```
<form onSubmit=atmiya()>
        Name : <input><br>
        <input type=submit>
</form>
<script>
        function atmiya()
        {
                alert("Web-page form data submitted successfully.");
        }
</script>
```

Atmiya University Rajkot

Document Object Model

An HTML page is rendered in a browser. The browser assembles all the elements contained in the html page, downloaded from the web server in its memory. Once done the browser then renders these objects in the browser window. One the HTML page is rendered in the browser window, the browser can no longer recognize individual HTML elements. To create an interactive web page it is imperative that the browser continues to recognize individual HTML objects even after they are rendered in the browser window.

This allows the browser to access the properties of these objects using the built in methods of the objects. Once the properties of an object are accessible then the functionality of the object can be controlled at will.

JavaScript enabled browsers are capable of recognizing individual objects in an HTML page, after the page has been rendered in the browser, because the JavaScript enabled browser recognize and uses the Document Object Model.

Using the Document Object Model JavaScript enabled browsers identify the collection of web page objects (web page elements) that have to be dealt with while rendering an HTML based, web page in the browser window.

DOM methods and property (Working With Forms in JavaScript)

In the DOM, all HTML elements are defined as objects. The programming interface is the properties and methods of each object. A method is an action you can do (like add or deleting an HTML element). A property is a value that you can get or set (like changing the content of an HTML element).

1. getElementById()
2. getElementByName()
3. innerHTML property

1. getElementById()

If you want to quickly access the value of an HTML input, than this method can be used. It return a reference of the HTML element (control).

⇨ **Syntax:**

getElementById(Reference Id);

❖ **Example:**

```
<body>
        Welcome <span id=x>Guest</span>,
        <script type=text/JavaScript>
                function abc()
                {
                        document.getElementById('x').innerHTML="ATMIYA";
                }
        </script>
        <input type=button value=" Ok " onClick=abc()>
```

Atmiya University Rajkot

```
</body>
```

Here we print a message in web page like “Welcome Guest,” And call a function abc() using onClick event from input button. Function abc() get element by id ‘x’ and replace the content ‘ATMIYA’ using innerHTML property.

2. getElementByName()

It returns a collection of objects with the specified NAME.

⇨ **Syntax:**

```
document.getElementByName(Reference Name);
```

❖ **Example:**

```
<script language=JavaScript>
        function abc()
        {
                var x=document.getElementByName(“a”);
                alert(x.length);
        }
</script>
<form>
        Science : <input type=radio name=”a”>
        Commerce : <input type=radio name=”a”>
        Arts : <input type=radio name=”a”>
        <input type=button onClick=abc() value=” Ok ”>
</form>
```

3. innerHTML property

The easiest way to get or modify the content of an element is by using the innerHTML property.

When the innerHTML property is set, the given string completely replaces the existing content of the object. If the string contains HTML tags, the string is parsed and formatted as it is placed into the document. This property is accessible at run time as the document is being parsed.

Each HTML element has an innerHTML property that defines both the HTML code and the text that occurs between that element's opening and closing tag. By changing an element's innerHTML after some user interaction, you can make much more interactive pages.

However, using innerHTML requires some preparation if you want to be able to use it easily and reliably. First, you must give the element you wish to change an id. With that id in place you will be able to use the getElementById function, which works on all browsers.

Atmiya University Rajkot

After you have that set up you can now manipulate the text of an element. To start off, let's try changing the text inside a bold tag.

❖ **Example:**

```
<body>
        Welcome <span id=x>Guest</span>,
        <script type=text/JavaScript>
            function abc()
            {
                document.getElementById('x').innerHTML="ATMIYA";
            }
        </script>
        <input type=button value=" Ok " onClick=abc()>
</body>
```

Timer [*Events/functions*]

The window object allows execution of code at specified time. The timer event is used to execute the statement[s] after particular time. The time will be in milliseconds. Once the timer event is started it will execute the statement[s] after specified time, which is given by user. There are two ways to use the timer events.

- setTimeout();
- setInterval();

These timer functions are called timing events.

setTimeout();

The window.setTimeout() method can be written without the window prefix. The first parameter in setTimeout function is an execution part and the second parameter indicates the number of milliseconds before execution.

⇨ **Syntax:**

setTimeout(Execution part, miliseconds);

❖ **Example:**

```
<script type=text/javascript>
    setTimeout("alert('Welcome to ATMIYA University')",3000);
</script>
```

setInterval();

The setInterval() method repeats a given expression[s] at every specified time-intervals (in milliseconds). The setInterval() method will continue calling the function until clearInterval() is called, or the window is closed. The ID value returned by setInterval() is used as the parameter for the clearInterval() method.

Atmiya University Rajkot

⇨ **Syntax:**

```
setInterval(Execution part, miliseconds);
```

The window.setInterval() method can be written without the window prefix. The first parameter is the function to be executed. The second parameter indicates the length of the time-interval between each execution.

Note: *1000 miliseconds = 1 Second*

❖ **Example:**

```
<script type=text/javascript>
        setInterval("alert('Welcome to ATMIYA University')",3000);
</script>
```

How to Stop the Execution?

The clearTimeout() or clearInterval() method stops the execution of the function specified in timer event.

⇨ **Syntax:**

```
window.clearTimeout(setInterval VariableName)
window.clearInterval(setInterval VariableName)
```

The window.clearInterval() method can be written without the window prefix. The clearInterval() method uses the variable name returned from setInterval() function.

❖ **Example:**

```
<input type=button value=Stop onClick=abc()>
<script>
        var x=setInterval("alert('Welcome to ATMIYA University')",3000);
        function abc()
        {
                clearInterval(x);
        }
</script>
```

Error-Handling in JavaScript

Try…Catch Statement

The try...catch statement allows you to test a block of code for errors. The try block contains the code to be run, and the catch block contains the code to be executed if an error occurs. When users see errors, they often leave the Web page. This will teach you how to catch and handle JavaScript error messages.

Atmiya University Rajkot

⇨ **Syntax:**

```
try
{
    Some JS statements
 }
catch(variable name)
{
   Handle errors message
}
```

When executing JavaScript code, different errors can occur. Errors can be coding errors made by the programmer, errors due to wrong input, and other unforeseeable things.

Note that try...catch is written in lowercase letters. Using uppercase letters will generate a JavaScript error!

❖ **Example:**

```
<script>
        try
        {
                Document.write("Welcome to ATMIYA Univeristy");
        }
        catch(z)
        {
                alert(z.description);
        }
</script>
```

The example above determines statement into try block generate some error, because of object 'Document' is written in capital letter. Try block sent error to the catch() statement. In catch statement, parameter 'z' store this error and finally display it in alert box as a parameter description.

The throw Statement

The throw statement can be used together with the try...catch statement, to create an exception for the error. The throw statement allows you to create an exception. If you use this statement together with the try...catch statement, you can control program flow and generate accurate error messages.

⇨ **Syntax:**

throw (exception)

The exception can be a string, integer, Boolean or an object. Note that throw is written in lowercase letters. Using uppercase letters will generate a JavaScript error.

Atmiya University Rajkot

❖ **Example:**

```
<script>
        var x=prompt("Enter a number between 0 and 9.","");
        try
        {
                if(x>9)
                {
                        throw "Err1";
                }
                else if(x<0)
                {
                        throw "Err2";
                }
                else if(isNaN(x))
                {
                        throw "Err3";
                }
                else
                {
                        alert("Entered Value is "+x);
                }
         }
        catch(er)
        {
                switch(z)
                {
                        Case 'Err1':
                                alert("Too High Value");
                                break;
                        Case 'Err2':
                                alert("Too Low Value");
                                break;
                        Case 'Err3':
                                alert("Value is not a number");
                }
        }
</script>
```

The example above determines the value of a variable called x. If the value of x is higher than 9, lower than 0, or not a number, we are going to throw an error. The error is then caught by the catch argument and the proper error message is displayed.

Atmiya University Rajkot

Question Bank: (1 Mark Questions)

1) Which property is used in DOM? – **innerHTML**
2) Which method is used to access the set (group) of objects in DOM? – **getElementsByName()**
3) Which event is occur when input element lose the focus? – **onBlur()**
4) Which event is triggered while release the mouse button? – **onMouseUp()**
5) Which event is triggered while release the key from keyboard? – **onKeyUp()**
6) Which event is written only into form element? – **onSubmit()**
7) Stands for : DOM – **Document Object Model**
8) Which event is used to execute statement only once after particular time? – **setTimeout()**
9) Which function is used to stop output of interval function? – **clearInterval()**
10) Which function is used to repeats an expression at specified time. – **setInterval()**
11) Which two statements are used for error handling in JavaScript? – **try...Catch, throw**
12) A throw() statement is used with _____ statement. – **try…catch()**
13) Which statement is compulsory used with try…catch statements? – **throw()**
14) onSubmit event is written in Submit button controller only. (True/False) – **False**
15) onReset event is written in Form element. (True/False) – **True**
16) onBlur event is triggered while image got blur pixel on web page. (True/False) – **False**
17) innerHTML is a method of Document Object Model. (True/False) – **False**
18) innerHTML is not a property of Timer event. (True/False) – **True**
19) innerHTML is written with setTimeout function. (True/False) – **False**
20) A throw statement is used with try…catch() statement. (True/False) – **True**
21) The exception of throw() can be a string, integer, Boolean or an object. (True/False) – **True**

Atmiya University Rajkot

Question Bank: (5 Marks Questions)

1) What is an Event? Describe mouse events with an example. (Page No. 116)
   Ans. What is Event? – 1 marks
   Mouse events with an example – 4 marks

2) What is an Event? Describe Keyboard events with an example. (Page No. 116, 118)
   Ans. What is Event? – 1 marks
   Keyboard events with an example – 4 marks

3) What is an Event? Describe onFocus, onError, onReset, onSelect with an example. (Page No. 119)
   Ans. What is Event? – 1 marks
   Events description with an example – 4 marks

4) What is DOM? Describe its methods with an example. (Page No. 123)
   Ans. What is DOM? – 2 marks
   Description of methods with example– 3 marks

5) What is DOM? Describe its property with an example. (Page No. 123, 124)
   Ans. What is DOM? – 2 marks
   Description of property with example– 3 marks

6) What is Timer event? Describe its functions with an example. (Page No. 125)
   Ans. What is Timer? – 1 marks
   Description of its 2 functions with example– 4 marks

7) Explain setInterval? How to stop the execution of Interval? (Page No. 125, 126)
   Ans. Explanation of setInterval. – 1 marks
   How to stop the execution? With example– 4 marks

8) Explain Error Handling statements with an example. (Page No. 126)
   Ans. Explanation of try…catch() statement with example – 2 marks
   Explanation of throw statement with example – 3 marks

Atmiya University Rajkot

Financial Mathematics

PAGE NO.:
DATE: / /

Module : 1

Introduction to option and Market

Introduction :

Finance is one of the fastest developing areas in the modern banking and corporate world. This together with the sophistication of modern financial products is a rapidly growing impetus for new mathematical methods and models. The area of financial mathematics is an expanding source for novel and relevant real world mathematics.

* Types of financial markets and their dealing :

The most important financial markets are as follows :

1. Stock market :

This deals with the company's shares (equities)

Atmiya University Rajkot

PAGENO.:
DATE: / /

2. Bond :

This deals with govenment and semi-govenment securities (guaranteed return)

3. Currency markets or Foreign exchange market (Forex) :

Where currencies are bought and sold.

4. commodity market :

Where physical assets such as oil, gas, copper, wheat, sugar, cotton etc. are traded.

* Financial derivatives or Derivatives securities or Derivatives products or Derivatives :

As the market become more sophisticated, more complex contracts

Atmiya University Rajkot

PAGENO.:
DATE: / /

then simple buy or sell trades have been introduced which are known as financial derivatives or derivatives.

They can give to investors of all kinds ~~and~~ a variety of opportunities to tailor dealings according to their investment needs.

An option is a financial derivative contract that gives the holder (buyer) the right, but not the obligation, to buy or sell an underlying assets at a predetermined price within a specified time period. The underlying assets can be stocks, commodities, currencies, or other derivatives.

* Option or European option :

The simplest financial option is a European call option which contracts with the following conditions.

At a prescribed time in the future known as the expiry date or expiration date, the holder of the option may purchase a prescribed asset known as the underlying asset for a prescribed amount known as exercise price or strike price.

* Holder and Writer :

The person which holds the option is said to be holder which the other party to the contract is known as writer.

Atmiya University Rajkot

PAGENO.:
DATE: / /

For the holder the contract is right but not an obligation. The writer does not have a potenti obligation, he must sell the asset if the holder chooses to buy it.

Since, the option confers on its holders a right with no obligation it has some value. Moreover, it must be paid for at the time of opening the contract conversely, the writer of the optio must be compensated for the obligation he has assumed.

Our focuses are :

How much would one pay for this right ?
i.e. what is the value of an opti

How can the writer minimize the risk associated with his obligation ?

Atmiya University Rajkot

PAGENO.:
DATE: / /

* upfront premium or cost of the option :

The amount paid in advance for holding an option is said to be the upfront premium or cost of the option.

* Speculative price :

The expected price of any derivative in the future is known as speculative price.

* Call option : → સરીદક
↳ share expiry date પેલા લેશવા.

On 1st April 2021, the holder of the option may purchase the share of SBI for Rs. 360/-. If the share price is Rs. 380/- on 7th October 2021, then the holder of the option would be able to purchase the asset for Rs. 360/- This action, which is called exercising the option, yields an immediate profit of Rs 20/- i.e, the holder can buy the same share for Rs. 360/-

Atmiya University Rajkot

PAGENO.:
DATE: / /

and immediately sell it the market for Rs. 380/-

∴ Rs. 380 − Rs. 360
= Rs. 20
= profit.

On other hand, share price is only Rs. 340 on 7th octoben 2021 then it would be not be sensible to exercise the option. why buy something for Rs. 360/- when it is available at Rs. 340/-

If the shares only taken the value Rs. 340/- or Rs. 380 on 7th octoben 2021 with equal probabili then expected profit to be made $\frac{1}{2} \times 0 + \frac{1}{2} \times 20 = 10$ (where 0 is profit and 20 is loss)

Ignoring interest rate for the moment it sems reasonable that the order of magnitude for the value of the option is Rs. 10/-

Now, if the sell price is Rs. 980/- on expiry the holder has made a net profit calculated as follows :

Atmiya University Rajkot

PAGENO.:
DATE: / /

profit on exercise = Rs. 20/-
cost of option = Rs. 10/-
−
Rs. 10/-

The net profit is Rs. 10/- is 100% of upfront perimum of Rs. 10/-. In other words if the share price is less than Rs. 360/- at expiry, the holder has lost all of the Rs. 10/- invested in the option. If the investor has instead purchase the share for Rs. 360 on 1st April 2021, the corresponding profit or loss of Rs. 20/- would have been $20 \times \frac{100}{360} = \pm 5.55\%$ of the original invertment.

Atmiya University Rajkot

PAGENO:
DATE: / /

Ex Sampnada holds and options on 23rd May 2020, to purchase a lot of 100 shares of Bajaj Financial Ltd. at Rs. 4500/- per share. After one year IF cost of option is Rs. 100/- per share and price of share Rs. 5500/- per share on 23rd May 2021 then find the total profit to sampnada in she exercice the option. also fir the profit in % corresponding to upfront premium.

→ 23rd May 2020 → 4500 ₹
23rd May 2021 → 5500 ₹

total profit per share,
= ₹ 5500/- − ₹ 4500/-
= 1000/- ₹

Net profit = total profit per share − cost of option

= ₹ 1000/- − 100/- ₹
= 900 ₹

Total Net profit on exercising the option = Rs. 900 × 100
= Rs. 90,000/-

Atmiya University Rajkot

$$\frac{\text{Total Profit on 100 shares} \times 100}{\text{No. of shares} \times \text{cost of option}}$$

Here, total profit in percentage

1000 → 100
90,000 → ?

$$\frac{90,000 \times 100}{10000} = 900\%$$

Ex. Raj holds and option to purchase a lots of 50 shares of TATA at Rs. 400/- after one year the price of share Rs. 300/- and cost of option or upfront premium Rs. 200 per share then will Raj exercise is option? why?

→ Raj will not exercise the option as when it is available in market at lower price the lost of Raj per share

= Rs. 400/- − Rs. 300/-

= Rs. 100/-

Total net loss of Raj per share

= Rs. 100/- + Rs. 200/-

= Rs. 300/-

total net loss of Raj

= Rs. 300 × 50

= Rs. 15000/-

Atmiya University Rajkot

PAGENO.:
DATE: / /

If Raj will not exercise an option then the total loss of Raj = the cost of option × 50 share

= Rs. 200/- × 50
= Rs. 10,000/-.

Que: Explain how the call option value is function a exercise price and time of expiry.

→ It is not always possible to predict share price in advance. However, it seems reasonable that higher the price is now then the higher the price ~~mighty~~ like to be future thus, the value of call option today depends on today's share price.

Simillarly, dependendents of the call option value on the exercise price is 2 years, the lower exercise price is less that has to be paid on exercise and so the higher the option will be implicit is that option is to expiry

Atmiya University Rajkot

PAGENO.:
DATE: / /

at simplificant time in the future. just before the option is above expiry. this the little time for the assets price to change. In this case the price at expiry is known as the fair degree of certaining. thus the call option also be the function is time to expiry.

* **Put option**

The right to sell an asset is known as put option and has pay off properties which are opposite to those of a call optio A put option allows its holder to sell the asset on a certain date for a prescribed amount

The writer is an obliged to buy the asset. the holder of a put option want the asset price to fall as low as possible. The value of put option also increase with the exercise price, since with higher exercise price more is received for the asset at expiry

Atmiya University Rajkot

PAGENO.:
DATE: / /

The payoff is an action to take advantage or benefit from exercising the option.

Que: Higher the asset price on the expiry of a call option, greater the profit.

→ In the call option, the holder has a right to purchase the asset at a prescribed amount. If the asset price is more than the price at the time of writing the contract then by exercising the option holder will purchase the asset at a lower price compared to its market price. The difference between both is the amount of profit earned on holding the call option.

Naturally, higher the asset price (market price) than the exercise price, more is received. thus, it is true that the "Higher the asset price at expiry, greater the profit".

Aliya University Rajkot

PAGENO.:
DATE: / /

Que: Explain higher the exercise price, more is received for the asset at expiry of the put option.

⇒ In put option, the holder has a right to sell the asset at the prescribed amount on expiry. If the asset price is less than the exercise price is then on exercising, the option holder will sell the asset at higher prices compared to the market price. Thus, the difference between both prices will be the profit of the option holder. Therefore, we can say that the "Higher the exercise price more is received at the expiry of put option."

Que: Explain the terms Bid - ask or Bid - offer

→ In reality, the option could not be bought and sold for the same price since the market maker has make living. Thus, there are two prices for the option. the investor pays the ask (or offer) price and sells for the bid price.

Atmiya University Rajkot

PAGE NO.:
DATE: / /

which is less than the ask price. The price quoted in the newspapers is usually a mid price, the average of bid and ask prices. the difference between two prices is known as bid - ask or bid - offer.

Ex Atul holds an option to purchase 50 shares of SKF bearing at 400 Rs. per shares. After 1 yr. if the price is Rs. 300 per shares and cost of option is Rs. 200 per share then will Atul exercise this option ? why ? explain with reason.

→ Atul will not exercise the option as he will not buy shares with it is available in lower price. In an exercising an option his loss per shares Rs. 400 − Rs. 300
= Rs. 100.

Net loss per share = loss of exercise + cost of option

= Rs. 100 + Rs. 200
= Rs. 300

Atmiya University Rajkot

क्या हम Shares को Call/Put से लगा सकते हैं?
(जो हमारे पास हैं)

PAGENO.:
DATE: / /

∴ Total loss of 50 shares = 50 × 300
= 15,000 ₹

If Atul not exercise an option then Atul has to pay Rs. 200 to writer will loss the money paid towards the cost of option.

Total loss on not exercising the option = 50 × 200 = Rs. 10,000.

Thus, it is not advisable to exercisir the option to decrease the loss.

Que: What are option for?

→ An investor who belives that a perticular derivative is going to rise can purchase some shares of that company.

If he is correct, he makes money, if he is wrong, he losses money.

If on the other hand the investor thinks that some shares are going to fall, he can conversly sell shares or buy puts.

Atmiya University Rajkot

PAGENO.:
DATE: / /

If he speculates by selling shares that he does not own he is selling short and will profit from a fall in that shares.

Thus, to earn that profit with less investment and small risk options are useful. The

The holder of call option has the possibility of an arbitrarily large payoff (payment made to someone) with loss limited be the intial premium while the writer has the possibility of an arbitrarily large loss, with profit limited to the intial premium.

Que: Explain in brief the central idea behind the theory and practice of option pricing.
OR (option theory)

Why would anyone write the optio

→ The writers of calls are taking a short position in the underlying :

Atmiya University Rajkot

They expect its value to fall. such writers are known as 'Bears' in the market. similarly, there must also be people who believes that the value of underlying will rise such writers are known as 'Bulls' in the market.

These Bulls are potential writers of put options and buyers of call options. since the value of put option rises when an asset price falls, what happens to the value of portfolio that containing both asset and puts?

The answer depends on the ratio of assets and option in portfolio.

A portfolio can contain only assets calls when the asset price falls while on that is all put option rises.

somewhere in between these two extremes is a ratio at which a small unpredictable movement in the asset does not result in any unpredictable movement in the value of portfolio.

Atmiya University Rajkot

PAGENO.:
DATE: / /

The ratio is instantaneously risk-free the reduction of risk by taking advantage of such correlations between the asset and option price movement in called hedging.

If a market maker can sell an option for more than it is worth and then hedge away all the risk for the rest of option life, he has locked in a guaranteed risk-free profit. This is the advantage of writing an option.

Que: What is American option? why it is important in comparison to european option?

→ An American option one of that may be exersied at any time perion to expiry.

Atmiya University Rajkot

PAGENO.:
DATE: / /

This characteristic makes the American option more interesting because european option can be exercised only at expiry date.

For mathematical point of view American option can be interpreted as free boundary problems any one can determine when it is best to exercise the option.

Que: Explain the following 1. Barrier option 2. Asian option 3. lookback option.

→ The option can either come into existence or become worthless if the underlying asset reaches some prescribed value before expiry is called Barrier option.

The price depends on some form of an average is called an Asian option.

Asian option is used by oil refiners. an oil refiners who buys oil at the spot rate, which may vary but wants to sell the refined product at a constant price

Atmiya University Rajkot

PAGENO.:
DATE: / /

The price depends on the asset price maximum or minimum is a is lookback option.
(History)

Que: Explain in detail the forward and future contract.

→ A forward contract is an arrangement between two parties where by one contract to buy a specified asset from the other for a specified price, known as the forward price, on a specified date in future (the delivery date or maturity date)

This contract has similarities to an option contract if we think of the forward price as equivalent to the exercise price but the asset has be delivered and paid for. A forward contract is also different from an option contract in that no changes hand until delivery. whereas to premium for an option

Atmiya University Rajkot

PAGENO.:
DATE: / /

A further difference from option contract is that forward price is not set at one of a number of fixed value for all contracts on the same asset with same expiry. Instead it is determined at the outset, individually for each contract.

A future contract is in essence a forward contract but with some technical modifications whereas a forward contract may be set up between any two parties, futures are usually traded on an exchange which specifies certain standard features of the contract such as delivery date and contract size.

A further complications is the margin requirment, a system designed to protect both the parties to a future contract against default.

Whereas the profit or loss from a forward contract is only realized at the expiry date, the value of a future contract is evaluted every day and the change in the

Atmiya University Rajkot

PAGENO.:
DATE: / /

Value is paid to one party by the other, so that the net profit or loss is paid across gradully over life time of the contract.

Despite these differences and the absence of any other assumption the future price is almost the same as the forward price when interest rates are predictable, th two coincide exactly.

Because neither forward nor future contracts contain the element of choice (to exercise or not to exercise) that is inherent in th option, they are easier to value

* Interest and present value :

Que : How much one should pay now to receive a guaranteed amount E at the future time T ?

→ If we assume that interest rates are constant then answer of above question can be found by discounting the future value E,

Atmiya University Rajkot

PAGENO:
DATE: / /

using continuously compound interest rate r, Money $M(t)$ grows exponentially because,

$$\frac{dM}{dt} = r \quad dt \longrightarrow (1)$$

$\therefore \log M = rt + \log c$; c = constant

$\therefore \log\left(\frac{M}{c}\right) = rt$

$\therefore \frac{M}{c} = e^{rt}$

$\therefore M = ce^{rt} \longrightarrow (2)$

since, M = Future value F at $t = T$

$\therefore F = ce^{rT}$

$\therefore c = Fe^{-rT}$

by 2, $M = Fe^{-rT} \cdot e^{rt}$

$= F e^{-r(T-t)}$

If the interest rate is a known function of time t then (1) will be form,

$\therefore \frac{dM}{M} = r(t) \quad dt$

$\therefore \log M = \int r(t) \quad dt + \log c$; c = const. of inte.

$\therefore \log\left\{\frac{M}{c}\right\} = \int r(t) \quad dt$

$\therefore \frac{M}{c} = e^{\int r(t) \quad dt}$

Atmiya University Rajkot

PAGENO.
DATE: / /

$$\therefore \quad M = c e^{\int r(t)\, dt} \longrightarrow (3)$$

For $M = E$ at $t = T$,
we have,

$$E = c e^{\int r(T)\, dT}$$

$$\therefore \quad c = E e^{-\int r(T)\, dT}$$

by (3), $M = E e^{-\int_T^T r(T)\, dT} \cdot e^{\int r(t)\, dT}$

$$M = E e^{-\int_t^T r(s)\, ds}$$

$\square$.

Ex. A company where share price is Rs. 200 offers bouns shares in the ratio 1:1 What will be the asset price and how show option contracts be altered?

→ If the price is Rs. 200 then due to bonus issue in the ratio 1:1 the market price (asset price) will be Rs. 200.

In call option difference between exercise price and asset price will increase. An investor suffer a loss.

Atmiya University Rajkot

PAGENO.:
DATE: / /

In such option exercise price > 100 loss
< 100 profit
= 100 No "

In put option higher exercise price will earn more.

In such option exercise price
> 100 profit
< 100 No profit
= 100 loss.

Thus, for higher the exercise price call option will suffer the loss while put option will earn profit.

Aaniya University Rajkot

PAGENO.
DATE: / /

Module : 2

Asset price & Random Walks.

* Some popular indices.

- BSE Index (India) also called SENSEX
- NSE NIFTY
- Dow Jones (U.S), S & P 500 (U.S), S & P Global, S & P Global 1200
- Nikkie Dow (Japan)
- FT - SE Index (U.K)
- BUX (Hungary)
- MDAX and SPAX (Germany)
- Hang seng (Hong kong)
- ASPI (All share price Index) (Sri lank

Que: A simple model for asset price / Explain a simple model for asset prices.

→ It is observed that the asset price must move randomly because of efficient market hypothesis.

- There are several different forms of the hypothesis with different respective assumptions, but they all basically say two things

Atmiya University Rajkot

PAGENO.:
DATE: / /

1. The past history is fully reflected in the present price, which does not hold any further information.

eg. one can trust the companies like Tata, Reliance, Infosys due to their proven track record.

2. Market respond immediately to any new information about an asset.

eg.
- Good financial result and declared of dividend may respond positively.

- loss may react negatively
- strict action after AMRI fire tragedy in kolkata caused negative effect on shares of 'Emami' cosmetics.

→ Thus, the Modelling of asset price is nearly about modelling the arrival of new information which affects the prices.

- With the two assumption above, unanticipated changes in the asset price are a Markov process.

Atmiya University Rajkot

PAGENO.
DATE: / /

- We notes the absolute change in the asset price is not by itself a useful quantity because a change of Rs. 1 is much more significant when the asset price is Rs. 20. than when it is Rs. 2000.

- Instead with each chang in asset price, we associate a rate defined to be change in the price divided by the original value.

The relative measure of the change is clearly a better indicator of its size than any absolute measure.

Now suppose that at time t the asset price is S. let us consider a small subsequent time interval dt, during which S chang to S + dS.

How might we model the corresponding return on the asset $\frac{dS}{S}$?

Atmiya University Rajkot

The common most model decomposes this return into two parts. one is predictable, deterministic, similar to the return on money invested in risk free bank.

It gives a contribution $\mu\, dt$ to the return $\frac{dS}{S}$, where μ is measure of the average rate of growth of the asset price also known as drift (Not planned or controlled).

In a simple model μ is the taken to be constant. In more complicated models μ can be a function of S and t.

The second contribution of $\frac{dS}{S}$ models the random change in the asset price in response to external effects such as unexpected news.

It is represented by a random sample drawn from a normal distribution with mean zero and adds a term

$$dx \text{ to } \frac{dS}{S}.$$

Aaniya University Rajkot

PAGENO.:
DATE: / /

Here, σ is a number called volatility, which measures the standard deviation of returns.

putting the contribution together we have,

$$\frac{ds}{s} = \sigma\, dx + \mu\, dt \rightarrow (1)$$

Above (1), is called stochastic differential equation. which is a mathematical representation of our simple recipe for generating asset prices.

By taking $\sigma = 0$ in (1) takes the form

$$\frac{ds}{s} = \mu\, dt$$

$$\therefore \log s = \mu t + \log c$$

$$\therefore \log\left\{\frac{s}{c}\right\} = \mu t$$

$$\therefore \frac{s}{c} = e^{\mu t} \rightarrow (2)$$

for $\left.\begin{array}{l} t = t_0 \\ s = s_0 \end{array}\right\}$ then $\frac{s_0}{c} = e^{\mu t_0}$

$$\therefore c = s_0 e^{-\mu t_0}$$

$$\therefore s = s_0 e^{\mu(t-t_0)} \quad (\because \text{by } 2)$$

Thus,
totally
predict
asset

The ten
randomn
of cos
process
properties

- dx is
a n
- The
- The

Economica
the m

- It fi
very
indices.

- It ca
the
probab

Atmiya University
Rajkot

PAGENO.:
DATE: / /

Thus, if $\sigma = 0$ the asset price is totally deterministic and we can predict the future price of the asset with certainly.

The term dx which contains the randomness that is certainly a feature of asset price is known as <u>wiener</u> process. It has the following properties.

- dx is random variable, drawn from a normal distribution.
- The mean of dx is zero
- The variance of dx is dt
  i.e. $dx^2 = dt$.

Economically reasonable justification of the model suggested by eq^n (1),

- It fits, with real time series data very well, at least for equities and indices.

- It can give information concerning to the behavior of S in a probablistic sense.

Atmiya University Rajkot

PAGENO.
DATE: / /

- Real data appears to have a greater probability of large rises or falls than the model predicts. But, on the whole it has stood the test of time remarkably well and can be a starting point for more sophisticated models.

Que. Derive the stochastic differential equation and also give economically reasonable justification of the derived equation.

→ Itô's lemma,

If $ds = f = s(\sigma dx + \mu dt)$ then

$$df = \sigma s \frac{df}{ds} dx + \left\{ \mu s \frac{df}{ds} + \frac{1}{2}\sigma^2 s^2 \frac{d^2 f}{ds^2} \right.$$

→ If we vary s by a small amount ds then f also varies by a small amount. From the taylor series expansion we can write,

$$df = \frac{df}{ds} \cdot ds + \frac{1}{2} \frac{d^2 f}{ds^2} ds^2 + \dots \quad \rightarrow (1)$$

As we have,

$$ds = f = (\sigma s\, dx + \mu s\, dt)$$

Aliya University Rajkot

PAGENO:
DATE: / /

$$\therefore ds^2 = (\sigma s\, dx + \mu s\, dt)^2$$
$$= \sigma^2 s^2\, dx^2 + 2\sigma s^2 \mu\, dx\, dt + \mu^2 s^2 dt^2 \quad \longrightarrow (2)$$

The first term is the only dominant term in (2) and we have $dx^2 = dt$ then

$$ds^2 \rightarrow \sigma^2 s^2 \cdot dt,$$

By (2) and (1) we have,

$$df = \frac{df}{ds}\left\{\sigma s\, dx + \mu s\, dt\right\} + \frac{1}{2}\sigma^2 s^2 \frac{d^2 f}{ds^2} dt$$

$$= \sigma s \frac{df}{ds} dx + \left\{\mu s \frac{df}{ds} + \frac{1}{2}\sigma^2 s^2 \frac{d^2 f}{ds^2}\right\} dt$$

Which proves Itô's lemma, relating the small changes in a function of random variable to the small change in the variable itself.

* Extension of Itô's lemma if $f = F(s,t)$

If $f = F(s,t)$ then we expand $F(s+ds,\ t+dt)$ in a taylor series about (s,t) to get,

Atmiya University Rajkot

PAGENO.:
DATE: / /

$$dF = \frac{\partial F}{\partial s} ds + \frac{\partial F}{\partial t} dt + \frac{1}{2} \frac{\partial^2 F}{\partial s^2} ds^2 + \dots$$

As, $F = ds$

$= \sigma s \, dx + \mu s \, dt$ and

$dx^2 \rightarrow dt$ as $dt \rightarrow$

We have,

$$dF = \sigma s \frac{\partial F}{\partial s} dx + \left\{ \mu s \frac{\partial F}{\partial s} + \frac{1}{2} \sigma^2 s^2 \frac{\partial^2 F}{\partial s^2} + \frac{\partial F}{\partial t} \right\} dt$$

is the application of Itô's lemma for the function $F = F(s, t)$.

Atmiya University
Rajkot

PAGENO.:
DATE: / /

* Notes :

1. df is known as jump of f.
2. The Itô's lemma can also be applied to functons to any random variable G, described by a stochastic diff. eq. of the form $dG = A(G,t)\,dx + B(G,t)\,dt$. then

Itô's lemma, says that,

$$dG = A \frac{df}{dG} dx + \left\{ B \frac{df}{dG} + \frac{1}{2} A^2 \frac{d^2 f}{dG^2} \right\} dt$$

Ex. For a function $f(s) = \log s$ find a stochastic diff. eq.

→ Here, $\frac{df}{ds} = \frac{1}{s}$, $\frac{d^2 f}{ds^2} = \frac{-1}{s^2}$

From Itô's lemma,

$$df = \sigma s \frac{dF}{ds} dx + \left\{ \mu s \frac{df}{ds} + \frac{\sigma^2 s^2}{2} \frac{d^2 F}{ds^2} \right\} dt$$

$$= \sigma \cancel{s} \left(\frac{1}{s}\right) dx + \left\{ \mu \cancel{s} \cdot \frac{1}{\cancel{s}} + -\frac{1}{2} \sigma^2 \cancel{s^2} \cdot \frac{1}{\cancel{s^2}} \right\} dt$$

$$= \sigma\, dx + \left\{ \mu - \frac{\sigma^2}{2} \right\} dt$$

Atmiya University Rajkot

PAGENO.:
DATE: / /

Ex. Find the stochastic diff. eq. satisfied by the functions.

1. $f(s) = As$
2. $f(s) = s^n$.

Here, $\frac{df}{ds} = A$, $\frac{d^2f}{ds^2} = 0$.

$\therefore$ By Itô's lemma,

$$df = \sigma s(A)\,dx + (\mu s(A) + \frac{1}{2}\sigma^2 s^2(0))\,dt$$

$$= \sigma s A\,dx + \mu s A\,dt.$$

2. $f(s) = s^n$

$$\frac{df}{ds} = ns^{n-1}, \quad \frac{d^2f}{ds^2} = n(n-1)s^{n-2}$$

By Itô's lemma,

$$df = \sigma s(ns^{n-1})\,dx + (\mu s(ns^{n-1}) + \tfrac{1}{2}\sigma^2 s^2(n(n$$

$$= \sigma n s^n\,dx + (\mu n s^n + \tfrac{1}{2}\sigma^2(n)(n-1)s^n)d$$

$\square$

Atmiya University Rajkot

PAGENO:
DATE: / /

Que: Explain in detail the elimination and Randomness.

→ There are two walks driven by single random variable dx, they are $ds = \sigma s\, dx + \mu s\, dt$ and

$$dF = \sigma s \frac{\partial F}{\partial s} dx + \left\{ \mu s \frac{\partial F}{\partial s} + \frac{\sigma^2 s^2}{2} \frac{\partial^2 F}{\partial s^2} + \frac{\partial F}{\partial t} \right\} dt$$

We can exploit this, fact to construct a third variable g whose variation dg is wholly deterministic during the small time period dt.

For that, let $g = F - \Delta S$. where Δ is held constant during the time step dt. then $dg = dF - \Delta ds$

$$= \sigma s \frac{\partial F}{\partial s} dx + \left\{ \mu s \frac{\partial F}{\partial s} + \frac{1}{2} \sigma^2 s^2 \frac{\partial^2 F}{\partial s^2} + \frac{\partial F}{\partial t} \right\} dt$$

$$- \Delta (\sigma s\, dx + \mu s\, dt)$$

$$= \sigma s \left\{ \frac{\partial F}{\partial s} - \Delta \right\} dx + \left\{ \mu s \left(\frac{\partial F}{\partial s} - \Delta \right) + \frac{1}{2} \sigma^2 s^2 \frac{\partial^2 F}{\partial s^2} + \frac{\partial F}{\partial t} \right\} dt$$

Aaniya University Rajkot

PAGE NO.:
DATE: / /

Now by choosing $\Delta = \frac{\partial F}{\partial S}$ we can make the co-efficient of dx vanish.

- This leaves the value of dg which is known and the random walk for g is purly deterministic. we can also interpret this as two random walks for s and f are correlated and so they are not independent.

- We can also conclude that the random components of both the walks are proportional by taking the correct linear combination of both s and f, the random variable can be eliminated all together.

Atmiya University Rajkot

PAGENO.
DATE: / /

Module : 3

The Black scholes Model.

Que: Explain the term : Arbitrage, Hedging, Risk free Investment, portfolio.

→ Arbitrage :

In financial arbitrage is the activity ~~from~~ of buying shares or currency from one financial market and selling it at a profit in another.

→ Hedging :

An action to prevent loss is known as Hedging.

→ Risk Free Investment :

An investment that gives guaranteed return with no chance of default is known as risk free investment. the government bounds and money deposited in nationalized or scheduled bank are risk free investment.

Atmiya University Rajkot

PAGENO.:
DATE: / /

→ ~~prof~~ portfolio :

A collection of investment like shares, bounds, deposits is called portfolio or investment portfolio.

Que: Explain the 'Risk' and their types
OR
How one can hedge to avoid loss or keep away risk.

→ In financial terminology variance of the return is known as 'Risk'. A bank ~~account~~ account has guaranteed return for short term, has no variance is termed as Risk-Free or risk-less.

- On the other hand a highly volatile stock with a very uncertain return and thus a large variance is a riskly asset.

- There are two types of Risk
  1. Specific
  2. non-specific

Atmiya University Rajkot

PAGENO.:
DATE: / /

- specific risk is the component of risk associated with a single asset (or a sector of the market for example chemical industries shares, metal companies shares etc)

Whereas non - specific risk is associated with factors affecting the whole market.

An unstable managment would affect an individual company but not the market, this company would show signs of specific risk and a highly volatalile share price perhaps. on the other hand the possiblity of a change in interest rates would be a non - specific risk, as such a change would affect the market as a whole.

* Notation

V = The value of option
S = The current value of the underly asset
σ = The volatality of underlying asset
E = the exercise price
T = The expiry
r = The interest rate

Aditya University Rajkot

PAGENO.:
DATE: / /

An option is a function of S and t
we will write $V(S,t)$ and
specifically $C(S,t)$ and $P(S,t)$ for
call and put option respectively.

Que: What happens at the moment of
expiry of a call option and
put option?
OR
→ Explain the situation of call option
and put option at $t = T$

→ Denoting by S the current market
price of the underlying asset
and E is the exercise price the
if $S > E$ at $t = T$. then it
market sense to exercise call
option handling over an amount
E of worth an asset S.

The profit for such a transcation
is then $S - E$. on the other hand
if $S < E$ at expiry we should
not exercise the option
because we would make a loss
of $E - S$.

In this case the option expires
worthless, thus the values of the
call option at expiry can the

Atmiya University Rajkot

PAGENO.:
DATE: / /

option at expiry can be written as
$c(S,T) = \max(S-E, 0)$

In put option it is worthless if $S > E$ at expiry but has a value $E-S$ for $S < E$

Thus the value of put options at expiry can be written as
$P(S,T) = \max(E-S, 0)$.

Que: What is the put - call parity ?
OR
→ How one should manage a portfolio that gives a guaranteed return E at $t = T$
OR
combine call and put options in such a way that they can be perfectly correlated.

→ suppose that we have one asset for which call and put options have the same expiry date T and the same exercise price E.

Denoting a Π to be value of portfolio we have, $\Pi = S + P - C \longrightarrow (1)$

Atmiya University Rajkot

PAGENO.:
DATE: / /

where p and c are values of put and call respectively.

The payoff of this portfolio at expiry is $S + \max(E-S, 0) - \max(S-E, 0)$

i.e. $S + (E-S) - 0 = E$ if $S \leq E$
OR $S + (0-(S-E)) = E$ if $S \geq E$

Thus, if $S \leq E$ or $S \geq E$ at expiry, the payoff is always the same namely E.

Thus, the investment is risk-free and we have $S + p - c = Ee^{-r(T-t)}$ → (2)

This relationship between the underlying asset and its options is called the put-call parity.

It is an example of risk eliminat achieved by carried out one transaction in asset and each of the options.

Que: State ~~and~~ the assumptions of the Black-Scholes analysis and derive the Black-Scholes PDE.

Aamiya University Rajkot

PAGENO.:
DATE: / /

→ Following are assumptions on B.S analysi

1. The asset price follows the eq^n of random walks
$ds = S(\sigma dx + \mu dt)$

2. The risk - free interest rate r and the asset volatility σ are known function of time over the life of option.

3. There are no transaction costs associated with hedging portfolio

4. The underlying asset pay on dividends during the life of the options. this assumptions can be dropped if the dividends are known before hand. they can be dropped if the paid dividends are either at discrete intervals or continously over the life of the option.

5. there are no arbitrage possibilities.
6. trading of the underlying asset can take place continuously.
7. short selling is permitted and the assets are divisible.

Atmiya University Rajkot

PAGENO.:
DATE: / /

* Derivation of Black-scholes PDE :

let V be the value of a whole portfolio containing a set of different options using Itô's lemma, we can write,

$$dV = \sigma s \frac{\partial V}{\partial s} dx + \left\{ \mu s \frac{\partial V}{\partial s} + \frac{1}{2} \sigma^2 s^2 \frac{\partial^2 V}{\partial s^2} + \frac{\partial V}{\partial t} \right\} dt \longrightarrow (1)$$

This gives a random walk followed by V

Now construct a portfolio consisting of one option and a number $-\Delta$ of the underlying asset.

then the value of the portfolio is $\Pi = V - \Delta S \longrightarrow (2)$

The jump in the value of this portfolio in one time step is

$$d\Pi = dV - \Delta dS \longrightarrow (3)$$

Here, Δ is held fixed during the time-step ; if it were not then $d\Pi$ would contain terms in $d\Delta$.

Aliya University Rajkot

PAGE NO.:
DATE: / /

As $ds = s(\sigma dx + \mu dt) \longrightarrow (4)$ then substituting ds and dV from (4) and (1) in (3) respectively.

$$d\Pi = \sigma s \left\{ \frac{\partial V}{\partial s} - \Delta \right\} dx + \left\{ \mu s \frac{\partial V}{\partial s} + \frac{1}{2}\sigma^2 s^2 \frac{\partial^2 V}{\partial s^2} + \frac{\partial V}{\partial t} - \mu \Delta s \right\} dt$$

$$= \sigma s \left\{ \frac{\partial V}{\partial s} - \Delta \right\} dx + \left\{ \mu s \left(\frac{\partial V}{\partial s} - \Delta \right) + \frac{1}{2}\sigma^2 s^2 \frac{\partial^2 V}{\partial s^2} + \frac{\partial V}{\partial t} \right\} dt \longrightarrow (5)$$

For the elimination of randomness we can choose $\Delta = \frac{\partial V}{\partial s} \longrightarrow (5A)$

then (5) reduce to,

$$d\Pi = \left\{ \frac{\partial V}{\partial t} + \frac{1}{2}\sigma^2 s^2 \frac{\partial^2 V}{\partial s^2} \right\} dt \longrightarrow (6)$$

Which states that the increment of portfolio is wholly deterministic

Now we apply the concept to arbitrage and supply - demand with the assumption of no transaction costs

Saurashtra University Rajkot

PAGENO.:
DATE: / /

The return on an amount π invested in riskless assets would see the growth $r\pi\, dt$ in a time dt.

If the RHS in (6) less than this amount an arbitrage could make a guaranteed riskless profit by borrowing riskless profit an amount π to invest in portfolio. The return for this risk-free strategy would be greater than the cost of borrowing.

Conversely, if the RHS of (6) were less than $r\pi\, dt$ then the arbitrage would short the portfolio and in

Either way the arbitrage would make a riskless, no cost instantaneous profit. The existance of such arbitrage with the ability to trade at low cost consure that the return on the portfolio and one the riskless amount are more or less equal

Atmiya University Rajkot

PAGENO.:
DATE: / /

thus, we have,

$$r\Pi\, dt = \left\{ \frac{\partial V}{\partial t} + \frac{1}{2}\sigma^2 s^2 \frac{\partial^2 V}{\partial s^2} \right\} dt \rightarrow (7)$$

(2), (3) $\rightarrow$ (7), divided by dt.

$$r\left\{ V - s\frac{\partial V}{\partial s} \right\} = \left\{ \frac{\partial V}{\partial t} + \frac{1}{2}\sigma^2 s^2 \frac{\partial^2 V}{\partial s^2} \right\}$$

i.e. $$\frac{\partial V}{\partial t} + \frac{1}{2}\sigma^2 s^2 \frac{\partial^2 V}{\partial s^2} + rs\frac{\partial V}{\partial s} - rV = 0 \rightarrow (8)$$

Above eq^n (8) is known as Black-scholes partial differential equation.

Que: Discuss in detail the significance of Black-scholes equation.

→ 1. The delta given by $\Delta = \frac{\partial V}{\partial S}$ is the rate of change of the value of our option w.r.t S. It is of fundamental importance in both theory and practical. the only parameter which affects the option price is volatilitely σ

- It is a ~~other~~ measure of option on other derivative products and those of underlying asset.

Adamya University Rajkot

PAGENO.:
DATE: / /

2. the linear differential operator L_{BS} is given by

$$L_{BS} = \frac{\partial}{\partial t} + \frac{1}{2}\sigma^2 S^2 \frac{\partial^2}{\partial S^2} + rS\frac{\partial}{\partial S} - r$$

has the financial interpretation as a measure of the difference between the return on a hedged option portfolio and return on a bank deposit.

- The first two terms and last two terms ~~respresent~~ respectively indicates this facts.

- This difference must be identically zero for a european option.

- In other to avoid arbitrage while this need not be so for an american option.

3. The B.S eq. does not contain the growth parameter μ

i.e. the value of an option is independent of how rapidly and slowly an asset grows this fact can be interpreted as two people

Atmiya University Rajkot

PAGENO.:
DATE: / /

may differ in their estimates for μ, yet still agree on the value of an asset.

Que: State the B.S eq. and discuss its mathematical significance. Also derive the boundry and final conditions for ~~equations~~ european options.

→ A PDE on its own generally has many solutions. for ex. the value of puts, call and S itself all satisfy the B.S.E.

- The value of an option should be unique. (otherwise arbitruge possibilities would arise) and so, to pin down the solution, we must also impose boundry conditions.

- A boundry conditions specifies the behaviour of the required solution at some part of the solution domain.

Atmiya University Rajkot

PAGENO.:
DATE: / /

- The most frequent type of PDE in financial problem is the parabolic equation.

- A parabolic equation for a function $V(s,t)$ is a specific relationship between V and its ~~PDE~~ partial derivative w.r.t the independent variable s and t. In simplest case, the highest derivative w.r.t s is second " and the highest derivative w.r.t t is only first order derivative.

The Black-scholes eqⁿ,

$$\frac{\partial V}{\partial t} + \frac{1}{2}\sigma^2 s^2 \frac{\partial^2 V}{\partial s^2} + rs\frac{\partial V}{\partial s} - rV = 0 \longrightarrow (1)$$

is of the category.

If the eq. is linear and the sign of these particular derivatives are the same, when they appear on the same side of the eq. then the eq. is called backward parabolic. otherwise it is called forward parabolic.

- The B.S eq. is backward parabolic.

Aamiya University Rajkot

PAGENO.:
DATE: / /

- once we have decided that our PDE is of which parabolic type, we can decide boundry conditions which lead to a unique sol^n.

we would specify that

$V(s,t) = V_a(t)$ on $s = a$

$V(s,t) = V_b(t)$ on $s = b$

$V_a, V_b \rightarrow$ given function of t.

- As B.S eq is backward parabolic we must impose a condition $V(s,t) = V_T(s)$ on $t = T$ when V_T is known function.

- we then solve for V in region $t < T$ (i.e. we would solve backward in time, if the eq. is of forward type we impose an initial condition on $t=0$ and solve in $t > 0$ in forward direction)

Now we restrict ourself on european call / put option, with value now denoted by $C(s,t)$ with exercise price E and expiry date T.

Aamiya University Rajkot

PAGENO.:
DATE: / /

At $t = T$ the value of call is known with certainly to be the payoff

$$c(S,T) = \max(S-E, 0) \rightarrow (2)$$

which is final condition for B.S eq.

- If $S=0$ at expiry payoff is 0.

Thus, the call option is worthless on $S=0$ even if there is a long time to expiry.

Hence, on $S=0$ we have,

$$c(0,t) = 0 \rightarrow (3)$$

As the asset price increase without bound it become even more likely that the options will be exercised and magnitude of the exercise price become less and less important.

Thus, as $S \to \infty$ the value of option becomes that of the asset and we write $c(S,t) \sim S$ as $S \to \infty \rightarrow (4)$

(2), (3), (4) are boundary conditions for call options.

Aditya University Rajkot

PAGENO.:
DATE: / /

For a put option with value $P(s,t)$ the final conditions is payoff

$$P(s,t) = \max(E-s, 0) \longrightarrow (5)$$

If s is even zero then it must remain zero.

In this case the final payoff for a put is known with certainly to be E.

To determine $P(0,t)$ we simply have to calculate the present value of the amount E received at time T.

Assuming the interest rate are constant we find the boundry conditions at $s=0$ to be

$$P(0,t) = E e^{-r(t-T)} \longrightarrow (6)$$

More generally for time, dependent interest we have

$$P(0,t) = E e^{-\int_t^T r(s)\,ds} \longrightarrow (7)$$

As $s \to \infty$ the option is unlikely to ~~expres~~ exercised and so,

$$P(s,t) \to 0 \text{ as } s \to \infty \longrightarrow (8)$$

(6), (7) and (8) are boundry conditions are put option.

Aaniya University Rajkot

PAGENO.:
DATE: / /

* Some definitions :

- Denoted by, π the value of portfolio.

- The smaller order effect on the portfolio is denoted by 'gemmer' and it is defined by

$$\Gamma = \frac{\partial^2 \pi}{\partial s^2}$$

- The decay of time value in a portfolio is represented by 'theta' which is defined as.

$$\Theta = -\frac{\partial \pi}{\partial t}$$

- sensitivity to volatility → 'vega'

$$v = \frac{\partial \pi}{\partial \sigma}$$

- sensitivity to interest rate r → 'rho'

$$\rho = \frac{\partial \pi}{\partial r}.$$

Aliya University Rajkot

PAGENO.:
DATE: / /

Ch: 4

Black - scholes Formulae

In this chapter review the second order linear parabolic equations, their physical interpretation, mathematical techniques for obtaining explicit solutions for specific problems. then we exploit this knowledge in the context of financial model to derice explicit solutions to some option valuation problems.

* The diffusion equation :

The equation $\frac{\partial u}{\partial \tau} = \frac{\partial^2 u}{\partial x^2}$ is known as diffusion equation or heat equation. (the general form is $\frac{\partial u}{\partial \tau} = c^2 \frac{\partial^2 u}{\partial x^2}$)

- It is a linear equation, i.e if u_1 and u_2 are solutions, then solutions $c_1 u_1 + c_2 u_2$ for any constant c_1, c_2.

- It is second order equation since the highest order derivative occurring is the second, in the term $\frac{\partial^2 u}{\partial x^2}$

Atmiya University Rajkot

PAGE NO.:
DATE: / /

- Its solution is $u(x,T) = \frac{1}{\rho\sqrt{\pi T}} \int_{-\infty}^{\infty} \left\{ u_0(s) \cdot e^{-\frac{(x-s)^2}{4T}} ds \right\}$

- It is a parabolic equation.

* Solution of Black-Scholes equation

The Black-Scholes for european call option can be written as

$$\frac{\partial c}{\partial t} + \frac{1}{2}\sigma^2 s^2 \frac{\partial^2 c}{\partial s^2} + rs\frac{\partial c}{\partial s} - rc = 0 \rightarrow (1)$$

with $c(0,t) = 0$
$c(s,t) \sim s$ as $s \rightarrow \infty$

and,
$c(s,T) = \max(s-E, 0)$

above eq^n (1), looks like the diffusion equation but it has more terms.

- Also, the equations is clearly a backward parabolic form with final data given at $t = T$

Atmiya University Rajkot

PAGENO.:
DATE: / /

- To find the solution, the first thing to do is to get rid of awkward s and s^2 terms multiplying $\frac{\partial c}{\partial s}$ and $\frac{\partial^2 c}{\partial s^2}$.

We set,

$$S = Ee^{x}, \quad t = T - \frac{\tau}{\frac{1}{2}\sigma^2}$$

$$c(s,t) = E\,v(x,\tau) \longrightarrow (2)$$

$$\frac{\partial c}{\partial t} = E\,\frac{\partial v}{\partial \tau}\,\frac{\partial \tau}{\partial t}$$

$$\left\{ \because t = \frac{\tau}{\frac{1}{2}\sigma^2} \quad \therefore \frac{\partial t}{\partial \tau} = \frac{-1}{\sigma^2/2} \quad \therefore \frac{\partial \tau}{\partial t} = -\frac{\sigma^2}{2} \right\}$$

$$= -E\,\frac{\sigma^2}{2}\,\frac{\partial v}{\partial \tau} \longrightarrow (3)$$

$$\therefore \frac{\partial c}{\partial s} = E \cdot \frac{\partial v}{\partial x}\,\frac{\partial x}{\partial s} = \frac{E}{S}\,\frac{\partial v}{\partial x} \longrightarrow (4)$$

$$\left\{ \because \frac{\partial s}{\partial x} = Ee^{x} = s, \quad \therefore \frac{\partial x}{\partial s} = \frac{1}{s} \right\}$$

$$\therefore \frac{\partial^2 c}{\partial s^2} = \frac{\partial}{\partial s}\left\{\left(\frac{E}{s}\right)\cdot\frac{\partial v}{\partial x}\right\}$$

$$= \frac{-E}{s^2}\,\frac{\partial v}{\partial x} + \frac{E}{s}\,\frac{\partial}{\partial x}\left(\frac{\partial v}{\partial x}\right)\frac{\partial x}{\partial s}$$

Atmiya University Rajkot

PAGENO.:
DATE: / /

$$= -\frac{E}{s^2}\frac{\partial v}{\partial x} + \frac{E}{s}\left(\frac{1}{s}\right)\frac{\partial^2 v}{\partial x^2} \qquad \left\{\because \frac{\partial x}{\partial s} = \frac{1}{s}\right\}$$

$$= \frac{E}{s^2}\left\{\frac{\partial^2 v}{\partial x^2} - \frac{\partial v}{\partial x}\right\} \longrightarrow (5)$$

Substituting (3), (4), (5) in (1),

$$\therefore -\frac{1}{2}E\sigma^2\frac{\partial v}{\partial \tau} + \frac{1}{2}\sigma^2 \cancel{s^2}\frac{E}{\cancel{s^2}}\left\{\frac{\partial^2 v}{\partial x^2} - \frac{\partial v}{\partial x}\right\}$$

$$+ rs\left\{\frac{E}{s}\frac{\partial v}{\partial x}\right\} - rEv = 0$$

$$\therefore -\frac{1}{2}E\sigma^2\left\{\frac{\partial v}{\partial \tau} - \frac{\partial^2 v}{\partial x^2} + \frac{\partial v}{\partial x}\right\}$$

$$+ rE\frac{\partial v}{\partial x} - rEv = 0$$

$$\therefore \frac{\partial v}{\partial \tau} - \frac{\partial^2 v}{\partial x^2} + \frac{\partial v}{\partial x} - r\left(\frac{2}{\sigma^2}\right)\frac{\partial v}{\partial x} + r\left(\frac{2}{\sigma^2}\right)v = 0$$

let $k = \dfrac{r}{\frac{1}{2}\sigma^2}$ then,

$$\frac{\partial v}{\partial \tau} = \frac{\partial^2 v}{\partial x^2} + (k-1)\frac{\partial v}{\partial x} - kv \longrightarrow (6)$$

Atmiya University Rajkot

PAGENO.:
DATE: / /

eq^n (6) now looks much more like a diffusion eq^n. the intial condition will be,

$$u(x,0) = \frac{1}{E} \max(S-E, 0)$$

$$= \frac{1}{E} \max\{Ee^x - E, 0\}$$

$$= \max(e^x - 1, 0) \longrightarrow (7)$$

To find the solution we try by putting $u = e^{\alpha x + \beta \tau} v(x,\tau) \longrightarrow (8)$

$\alpha, \beta \rightarrow$ constant for some constant α and β to be found then,

$$\frac{\partial v}{\partial x} = \alpha e^{\alpha x + \beta \tau} v + e^{\alpha x + \beta \tau} \frac{\partial v}{\partial x} \rightarrow (9)$$

$$\therefore \frac{\partial^2 u}{\partial x^2} = \alpha^2 e^{\alpha x + \beta \tau} v + \alpha e^{\alpha x + \beta \tau} \frac{\partial v}{\partial x} + \alpha e^{\alpha x + \beta \tau} \frac{\partial v}{\partial x} + e^{\alpha x + \beta \tau} \frac{\partial^2 v}{\partial x^2}$$

$$\therefore \frac{\partial^2 u}{\partial x^2} = \alpha^2 e^{\alpha x + \beta \tau} v + 2\alpha e^{\alpha x + \beta \tau} \frac{\partial v}{\partial x} + e^{\alpha x + \beta \tau} \frac{\partial^2 v}{\partial x^2} \longrightarrow (10)$$

$$\therefore \frac{\partial u}{\partial \tau} = \beta e^{\alpha x + \beta \tau} + e^{\alpha x + \beta \tau} \frac{\partial v}{\partial \tau} \rightarrow (11)$$

Atmiya University Rajkot

substituting (8), (9), (10) & (11) in (6) we have,

PAGE NO.:
DATE: / /

$$\beta e^{\alpha x+\beta\tau} u + e^{\alpha x+\beta\tau} \frac{\partial u}{\partial \tau}$$

$$= \alpha^2 e^{\alpha x+\beta\tau} u + 2\alpha e^{\alpha x+\beta\tau} \frac{\partial u}{\partial x} + e^{\alpha x+\beta\tau} \frac{\partial^2 u}{\partial x^2} + (k-1)\left\{\alpha e^{\alpha x+\beta\tau} u + e^{\alpha x+\beta\tau} \frac{\partial u}{\partial x}\right\}$$

$$- k e^{\alpha x+\beta\tau} u$$

$$\therefore \beta u + \frac{\partial u}{\partial \tau} = \alpha^2 u + 2\alpha \frac{\partial u}{\partial x} + \frac{\partial^2 u}{\partial x^2} + (k-1)\left\{\alpha u + \frac{\partial u}{\partial x}\right\} - ku \longrightarrow (12)$$

We can obtain an equation with no u terms by choosing $\beta = \alpha^2 + (k-1)\alpha - k$ and $2\alpha + (k-1) = 0$. eliminating the $\frac{\partial u}{\partial x}$ terms as well this equations for α and β give,

$$\alpha = \frac{-1}{2}(k-1)$$

$$\beta = \frac{1}{4}(k-1)^2 + (k-1)\left\{\frac{-1}{2}(k-1)\right\} - k$$

$$= \frac{1}{4}(k-1)^2 - k$$

$$= \frac{-1}{4}(k^2 - 2k + 1 + 4k) = \frac{-1}{4}(k+1)^2$$

Atmiya University Rajkot

PAGENO.:
DATE: / /

then by (8), $v = e^{-\frac{1}{2}(k-1)x - \frac{1}{4}(k+1)^2 \tau} \cdot u(x,\tau)$ $\rightarrow$ (13)

where,

$$\frac{\partial u}{\partial \tau} = \frac{\partial^2 u}{\partial x^2} \quad \text{for} \quad -\infty < x < \infty, \quad \tau > 0$$

with $u(x,0) = u_0(x) = \dfrac{v(x,0)}{e^{-\frac{1}{2}(k-1)x}}$ $\left(\because \tau = 0\right)$

$$= \frac{\max(e^x - 1, 0)}{e^{-\frac{1}{2}(k-1)x}} \quad (\because \text{by } (7))$$

$$= \max\left((e^x - 1)\, e^{+\frac{1}{2}(k-1)x}, 0\right)$$

$$= \max\left(e^{\frac{1}{2}(k+1)x} - e^{+\frac{1}{2}(k-1)x}, 0\right) \rightarrow (14)$$

The solution of the given equation is given by,

$$u(x,\tau) = \frac{1}{2\sqrt{\pi\tau}} \int_{-\infty}^{+\infty} u_0(s)\, e^{-\frac{(x-s)^2}{4\tau}}\, ds \rightarrow (15)$$

Atmiya University Rajkot

PAGENO.:
DATE: / /

Ch: 5

Variations on the Black-scholes Model.

Que: What are dividends?

→ The dividends are payments to share-holders out of the profit, made by a company concerned.

- The likely future dividend of a company is reflected in today's share price.

- The price of an option of an underlying asset that pays dividends is affected by the payments.

Que: Defined the dividend yield an explain in detail the constant dividend yield structure. Also derive Black-scholes PDE corresponding to constant dividends yield structure.

→ The dividend yield is that proportion of the asset price paid out per unit time.

Atmiya University Rajkot

PAGENO.:
DATE: / /

- suppose that in a time dt the underlying asset pays out the dividends $D_0 S\, dt$, where D_0 is a constant.

- This payment is independent of time except through the dependence on S.

- Thus, $D_0 S\, dt$ represent a constant and continuous dividend yield D_0.

- We consider the effect of the dividend payments on the asset price.

Arbitrage considerations shows that in each time step dt, the asset price must fall by the amount of ~~amount~~ dividend payment $D_0\, dt$ in ~~addition~~ to usual fluctuations

It follows that the random walks for asset price $dS = \sigma S\, dx + \mu S\, dt$ is modified to

$$dS = \sigma S\, dx + (\mu - D_0) S\, dt \rightarrow (1)$$

and the portfolio changes by an amount

$$-D_0 \Delta\, dt \rightarrow (2)$$

Atmiya University Rajkot

PAGENO.:
DATE: / /

Thus, we must add (2) to our $d\Pi = dV - \Delta dS$ to arrive at

$$d\Pi = dV - \Delta dS - D_0 S dt \rightarrow (3)$$

and according to B. S. equation changes to,

$$\frac{\partial V}{\partial t} + \frac{1}{2}\sigma^2 S^2 \frac{\partial^2 V}{\partial S^2} + (r - D_0) S \frac{\partial V}{\partial S} - rV = 0 \rightarrow (4)$$

For call option the final condition is still $C(S,t) = \max(S - E, 0)$ and boundary condition at $S = 0$ remains as $C(0,t) = 0$.

The only changes to boundary condition when we use the modified B. S. eq^n (4) is that

$$C(S,t) \sim S e^{-D_0 (t-T)} \text{ as } S \rightarrow \infty$$

This is because in the limit $S \rightarrow \infty$ the option become equivalent to the asset but without its dividend income.

Q. Explain discrete dividend structure and derive the jump condition for the same.

Atmiya University Rajkot

PAGENO.:
DATE: / /

- If the dividend is not constant then it is discrete dividend.

suppose that our - asset pays just one dividend during the life time of the option at time $t = t_d$

we shall consider only the case in which dividend yield is known constant d_y $(0 \leq d_y \leq 1)$

Thus, at time t_d, holders of the asset receive a payment $d_y S$. where S is the asset price just before dividend is paid.

consider the effect of the dividend payment on the asset price.

Its value just before dividends date at time t_d^- can not equal its value just after a time t_d^+.

If it did, the strategy of buying the asset immediately before t_d, collecting the dividend and selling straight away would

Aamiya University Rajkot

PAGENO.:
DATE: / /

yield a risk - free profit

It is clear that in absent of other factor such as taxes the asset price must fall by exactly the amount of dividend payment thus,

$$S(t_d^+) = S(t_d^-) - dy\, S(t_d^-)$$
$$= S(t_d^-)(1 - dy) \rightarrow (1)$$

Now consider the effect of discountinous changes in the asset value S on an option. with value $V(S,t)$ contingent (depending) on the asset.

To eliminate the arbitrage possibility, the value of the option must be continuous as a function of time across the dividend date; the value of the option is the same immediately before the dividend date. as it is immediately after.

Thus, we arrive the jump condition
$V(S_1(t_d^-), t_d^-) = V(S_2(t_d^+), (t_d^+)) \rightarrow (2)$
This is the jump condition for discrete and dividend structure

Atmiya University Rajkot

Fourier series

Periodic function:

A function $f(x)$ is said to be periodic with period $p > 0$ if $f(x) = f(x+p)$ for all real x.

Fourier series:

Representation of a function by a linear combination of mutually orthogonal functions over a certain interval is called Fourier series.

Dirichlet's conditions:

Any periodic function f(x) can be represented as a fourier series

If $f(x)$ satisfies the following conditions:

(I) $f(x)$ is bounded and single valued.

(II) $f(x)$ has at most a finite number of minima and maxima in the defined interval.

(III) $f(x)$ has at most , a finite number of discontinuities in the defined interval.

#Trigonometric Fourier series:

Any function $f(x)$ with period $2l$ in the interval (a,b) can be expressed as

$$f(x) = \frac{a_0}{2} + \sum_{n=1}^{\infty} a_n \cos\left(\frac{n\pi x}{l}\right) + b_n \sin\left(\frac{n\pi x}{l}\right)$$

Where $l = \frac{b-a}{2}$

Atmiya University Rajkot

Fourier series

#Euler's formula:

$$a_0 = \frac{1}{l}\int_a^b f(x)dx$$

$$a_n = \frac{1}{l}\int_a^b f(x)\cos\left(\frac{n\pi x}{l}\right)dx$$

$$b_n = \frac{1}{l}\int_a^b f(x)\sin\left(\frac{n\pi x}{l}\right)dx$$

ODD FUNCTION: $f(-x) = -f(x)$

EVEN FUNCTION: $f(-x) = f(x)$

Note:

(I) $\int_{-l}^{l} f(x)dx = 2\int_0^l f(x)dx$ if $f(x)$ is even.

(II) $\int_{-l}^{l} f(x)dx = 0$ If $f(x)$ is odd.

(III) Odd*odd=even

Even*even=even

Odd*even=odd

Even*odd=odd

#Fourier series for Odd & Even function:

Here, the interval should be $(-l,l)$.

(I) if $f(x)$ is even function & $(-l,l)$ is interval, then $b_n = 0$ and find only a_0 & a_n.

(II) If $f(x)$ is Odd function & $(-l,l)$ is interval, then $a_0 = a_n = 0$ and find only b_n.

Atmiya University Rajkot

Fourier series

Note:

$\sin n\pi = 0$; where n is integer.

$\cos n\pi = (-1)^n$

$\sin 2n\pi = 0$

$\cos 2n\pi = 1$

$\sin 0 = 0$

$\cos 0 = 1$

Leibnitz's rule:

$$\int uvdx = uv_1 - u'v_2 + u''v_3 - u'''v_4 + ...$$

Where u' = differentiation

v_1 = integration

Half range Cosine series:

The half range cosine series of $f(x)$ in the interval $(0,l)$ is

$$f(x) = \frac{a_0}{2} + \sum_{n=1}^{\infty} a_n \cos\left(\frac{n\pi x}{l}\right)$$

Where $a_0 = \frac{2}{l}\int_0^l f(x)dx$

$$a_n = \frac{2}{l}\int_0^l f(x)\cos\left(\frac{n\pi x}{l}\right)dx$$

Half range sine series:

The half range sine series of $f(x)$ in the interval $(0,l)$ is

$$f(x) = \sum_{n=1}^{\infty} b_n \sin\left(\frac{n\pi x}{l}\right)$$

Where $\mathrm{b}_n = \frac{2}{l}\int_0^l f(x)\sin\left(\frac{n\pi x}{l}\right)dx$

Atmiya University Rajkot

MODI Method: -

Modified Distribution (MODI) Method (also called u-v method)

After getting the initial feasible solution of a transportation problem, we test this solution for optimality. i.e. we check whether the solution thus obtained minimizes the total transportation cost or not.

Note: -

It is important to note that the optimality test is applicable to a feasible solution consisting of (m+n-1) allocations in independent positions.

An efficient technique called the **modified distribution (MODI) method (also called u-v method)** which helps in comparing the relative advantage of alternative allocations for all the unoccupied cells simultaneously is discussed below.

Steps of MODI Method (u - v method or Transportation Algorithm): -

The steps to evaluate unoccupied cells are as follows:

Step (1)

Construct a transportation table entering the capacities $a_1, a_2, a_3, \ldots, a_m$ of the sources and the requirements $b_1, b_2, b_3, \ldots, b_n$. Enter the various costs c_{ij} at the upper left corners of all the cells.

Find an initial Basic Feasible solution (with m+n-1 occupied cells in independent positions) of the problem by any of the methods (like NWCM, LCM or VAM to find initial solution) **enter the allocation at the centres of the cells.**

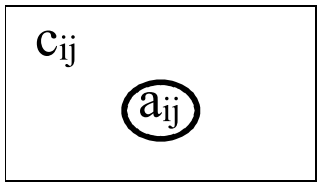

Step (2)

Find the set of number

u_i ($i = 1, 2, 3, \ldots, m$) and v_j ($i = 1, 2, 3, \ldots, n$)

cij = ui + vj	**formula for each occupied cell**

To start with any one of u_i's or v_j's is assigned the value zero

It is better to assign zero for a particular u_i or v_j where there are maximum number of allocations in a row or column respectively as it will reduce arithmetic work considerably.

Atmiya University Rajkot

Then complete the calculation of u_i's and v_j's for other rows and columns by using the relation

cij = ui + vj	**formula for all occupied cells (i, j)**

Step (3)

For each unoccupied cell (i, j) find the $u_i + v_j$ and enter the same at the upper right corner of the corresponding cell (i, j)

Step (4)

Find the cell evaluation

dij = cij - ui + vj	**formula for each unoccupied cell (i, j)**

and enter at the lower right corners of the corresponding cells. (d_{ij} are also known as opportunity cost)

Step (5)

Examine the cell evaluations $\mathbf{d_{ij}}$ for unoccupied cells and conclude that

(i) if all $\mathbf{d_{ij} > 0}$ then the solution under test is optimal and unique

(ii) if all $\mathbf{d_{ij} \geq 0}$ with at least one $\mathbf{d_{ij} = 0}$ then the solution under optimal and alternative solution exists.

(iii) if at least one $\mathbf{d_{ij} < 0}$ then the solution is not optimal, hence an improved solution can be obtained by entering unoccupied cell (i, j) in the basis. **An unoccupied cell having the largest negative value** of $\mathbf{d_{ij}}$ is chosen for entering into the solution mix (new transportation schedule)

Step (6)

Construct a closed path (or loop) for the unoccupied cell with **largest negative $\mathbf{d_{ij}}$ opportunity cost**. start the closed path with the selected unoccupied cell and mark a plus sign (+) in this cell, trace a path along the rows (or columns) to an occupied cell, mark the corner with minus sign (-) and continue down the column (or row) to an occupied cell and mark the corner with plus sign (+) and minus sign (-) alternatively. Close the path back to the selected unoccupied cell.

Atmiya University Rajkot

Step (7)

Select the smallest quantity amongst the cell marked with minus sign on the corners of closed loop Allocate this value to the selected unoccupied cell and add it to other occupied cells marked with plus sign and subtract it from the occupied cells marked with minus signs.

Step (8)

Obtain a new improved solution by allocating units to the unoccupied cell according to step (6) and calculate the new total transportation cost

Step (9)

- Test the revised solution for optimality.
- The procedure terminates when all $\mathbf{d_{ij} \geq 0}$ for all unoccupied cells.

Remarks:

- The loop starts and ends at the selected unoccupied cell.
- It consists of successive horizontal and vertical (connected) lines whose **end points** must be **occupied cells**, **except** for an end point associated with entering **unoccupied** cell. **This means that every corner element of the loop must be an occupied cell.**

Thus, in the table after making all the entries the occupied cells (cells having allocations) and the unoccupied cells will be as follows

(cij)
Allocation $\mathbf{a_{ij}}$
Occupied Cell

(cij)	$\mathbf{c_{ij} - u_i + v_j}$
	$\mathbf{d_{ij} = c_{ij} - u_i + v_j}$
Unoccupied Cell	

Atmiya University Rajkot

* Random experiment :-

A experiment is random means that the experiment has more than one possible outcome and it is not possible to predict with certainty which outcome that will be. For instance in an experiment of tossing an odinary coin, it can be predicted with certainty that the coin will land either heads up or tails up, but it is not known for sure whether heads or tails will occur. If a die is thrown once, any of the six numbers, i.e., 1, 2, 3, 4, 5, 6 may turn up not sure which number will come up.

→ Outcome :-

A possible result of a random experiment is called its out come.
For example if the experiment consists of tossing a coin twice, some of the outcomes are HH, HT

→ Sample space :-

A sample space is the set of all posible outcomes of an experiment. In fact, it is the universal set S pertinent to a given experiment.
The sample space for the experiment of tossing a coin twice is given by

$$S = \{HH, HT, TH, TT\}$$

The sample space for the experiment of drawing a card out of a deck is the set of all cards in the deck

Atmiya University Rajkot

Or Random Experiment :-

If an experiment is conducted, any number of time, under identical condition there is a set of all possible outcomes associated with it. If the outcome is not unique but may be any one of the possible outcomes, the experiment is called random experiment.

* Event :-

An event is a subset of a sample space S. For example the event of drawing an ace from a deck is A = Ace of Heart, Ace of Club, Ace of Diamond, Ace of Spade.

Or

Combination of outcome is called an event.

* Types of events :-

* Impossible and Sure Events :-

The empty set ϕ and the sample space S describe events. In fact, ϕ is called an impossible event and S, i.e., the whole sample space is called a sure event.

* Simple or Elementary :-

Event If an event E has only one sample point space, i.e., a single outcome of an experiment, it is called a simple or elemetary event.

Atmiya University Rajkot

The sample space of the experiment of tossing two coins is given by

$$S = \{HH, HT, TH, TT\}$$

The event $E_1 = \{HH\}$ containing a single outcome HH of the sample space S is a simple or elementary event. If one card is drawn from a well shuffled deck, any particular card drawn like 'queen of Hearts' is an elementary event.

* Compound Event :-

If an event has more than one sample point it is called a compound event, for example, $S = \{HH, HT\}$ is a compound event.

* Complementary event :-

Given an event A, the complement of A is the event consisting of all sample space outcomes that do not correspond to the occurrence of A.

* Mutually exclusive :-

Two event A and B of a sample space S are mutually exclusive if the occurrence of any one of them excludes the occurrence of the other event. Hence, the two events A and B cannot occur simultaneously and thus $P(A \cap B) = 0$.

Atmiya University Rajkot

Remark :- Simple or elementary events of a sample space are always mutually exclusive.

For example,

the elementary events $\{1\}, \{2\}, \{3\}, \{4\}, \{5\}$ or $\{6\}$ of the experiment of throwing a die once. The events E = getting a even number and F = getting odd number are mutually exclusive events because $E \cap F = \phi$.

* Exhaustive events :-

If $E_1, E_2, \ldots, E_n$ of are n events of a sample space S and if $E_1 \cup E_2 \cup E_3 \cup \ldots \cup E_n = \bigcup_{i=1}^{n} E_i = S$ then $E_1, E_2, \ldots, E_n$ are called exhaustive events.

In other words, events $E_1, E_2, \ldots, E_n$ of a sample space S are said to be exhaustive if atleast one of them necessarily occur whenever the experiment is performed.

Consider the example of rolling a die. We have $S = \{1, 2, 3, 4, 5, 6\}$ Define the two events.

A : 'a number less than or equal to 4 appears.'

B : 'a number greater than or equal to 4 appears.'

Atmiya University Rajkot

Now $A = \{1, 2, 3, 4\}$, $B = \{4, 5, 6\}$

$A \cup B = 1, 2, 3, 4, 5, 6$

$= S$

Such events A and B are called exhaustive events.

* Independent Events :-

Let E and F be two events associated with a sample space S. If the probability of occurrence of one of them is not affected by the occurrence of the other, then we say that the two events are independent.

Thus, two events E and F will be independent, if

a) $P(F|E) = P(F)$, provided $P(E) \neq 0$

b) $P(E|F) = P(E)$, provided $P(F) \neq 0$

Using the multiplication theorem on probability, We have

c) $P(E \cap F) = P(E)\, P(F)$

* Mutually exclusive and exhaustive events :-

If $E_1, E_2, ---, E_n$ are n events of a sample space S and if $E_i \cap E_j = \phi$ for every $i \neq j$ i.e. E_i and E_j are pairwise disjoint and $\bigcup_{i=1}^{n} E_i = S$ then the events $E_1, E_2, ---, E_n$ are called mutually exclusive and exhaustive events.

Atmiya University Rajkot

Consider the example of rolling a die.
We have $S = \{1, 2, 3, 4, 5, 6\}$ let us define the three events as

A = a number which is a perfect square
B = a prime number
C = a number which is greater than or equal to 6.

Now $A = \{1, 4\}$, $B = \{2, 3, 5\}$, $C = \{6\}$
Note that $A \cup B \cup C = \{1, 2, 3, 4, 5, 6\} = S$.
Therefore, A, B and C are exhaustive events.

Also $A \cap B = B \cap C = C \cap A = \phi$.
Hence, the events are pairwise disjoint and thus mutually exclusive.

* Classical definition :-

If all of the outcomes of a sample space are equally likely, then the probability that an event will occur is equal to the ratio :

$$\frac{\text{The number of outcomes favorable to the event}}{\text{The total number of outcomes of the sample space}}$$

Suppose that an event A can happen in m ways out of a total of n possible equally likely ways.

Atmiya University Rajkot

Then the classical probability of occurrence of the event is denoted by

$$P(E) = m/n$$

The probability of non occurrence of the event E is denoted by $P(\text{not } E) = 1 - P(E)$

Thus, $P(E) + P(\text{not } E) = 1$

The event 'not E' is denoted by $\bar{E}$ or E'

[complement of E]

* Trail :-

Any perticular performance of a random experiment is called Trail.

Ex:- Tossing of a coin is trail and getting a head on trail is an event.

Que. What is the probability that a leep year selected at random will have 53 sunday.

Ans:- In leep year 366 days

i.e. 52 weeks and 2 days.

and possible out comes of 2 days are 7

M-T, T-W, W-T, T-F, F-S, S-S, S-M

$\therefore$ 53 sunday $= 2/7$

Que:- From a collection of 10 bulbs which 4 are diffective 3 bulbs are selected random and fitted in to lemps find the probability

1] all 3 bulb is glow

2] and room is lit.

Alimiya University Rajkot

Ans 1- Total number of bulbs = 10

3 - bulbs are selected from 10 bulbs

$$n(S) = \binom{n}{r} = \binom{10}{3} = \frac{n!}{r!(n-r)!}$$

$$= \frac{10!}{3!\,7!} = \frac{10 \times \overset{3}{9} \times \overset{4}{8} \times \cancel{7!}}{\cancel{3} \times \cancel{2}\,\cancel{7!}} = 120$$

1] Let A be the event that all 3 bulbs will glow

This event will occurs when 3 bulbs are selected from 6 non defective bulbs

$$n(A) = {}^6C_3 = 20$$

$$P(A) = \frac{n(A)}{n(S)} = \frac{20}{120\ 6} = \frac{1}{6}$$

2] Let B be the event that the room is lit

$\bar{B}$ be the event that the room is dark.

$$n(\bar{B}) = ({}^4C_3) = \frac{4 \cdot 3!}{3!} = 4$$

$$P(\bar{B}) = \frac{n(\bar{B})}{n(S)} = \frac{4}{120} = \frac{1}{30}$$

$$P(B) = 1 - P(\bar{B}) = 1 - \frac{1}{30} = \frac{29}{30}$$

Atmiya University Rajkot

Teacher's Signature

Que1- 4 letters of the word 'Thursday' are arrange in all possible ways find a probability that the world form is 'Heart'.

Ans1- Total number of 'Thursday' is 8
4 - letters from 8 Letters can be arrange in

$\left[{}^{n}P_{r} = \frac{n!}{(n-r)!} \right]$ ${}^{8}P_{4} = \frac{8!}{(8-4)!}$ ways

$n(S) = \frac{8 \times 7 \times 6 \times 5 \times 4!}{4!} = 1680$

Let A be the event that the word formed is 'Heart' can be formed in one way only
$n(A) = 1$

$\therefore P(A) = \frac{n(A)}{n(S)} = \frac{1}{1680}$

Que1- Find the probability that their will be 5 sunday in the month of ottomber.

Ans:- M - T - W $\Rightarrow \frac{3}{7}$
T - W - T
W - T - F
T - F - S
F - S - S
S - S - M
S - M - T

Atmiya University Rajkot

DATE: / /

Thm 1- Multiplicative Law or Compound Law of probability :-

A compound event is the result of the simultaneous occurrence of two or more event. The probability of a compound event depends upon whether the events are independent or not. Hence, there are two theorems;

a] Conditional Probability Theorem
b] Multiplicative Theorem for Independent Events

a] Conditional probability Thm :-

For any two events A and B in a sample space S, the probability of their simultaneous occurrence, i.e., both the event occurings simultaneously is given by

$$P(A \cap B) = P(A)\,P(B/A)$$

or

$$P(A \cap B) = P(B)\,P(A/B)$$

$$P(B/A) = \frac{P(A \cap B)}{P(A)}$$

where $P(B/A)$ is the conditional probability of B given that A has already occurred. $P(A/B)$ is the conditional probability of A given that B has already occurred.

b] Multiplicative Thm for independent Events :

If A and B are two independent events, the probability of their simultaneous occurrence is given

Ramiya University Rajkot

Teacher's Signature

$P(A \cap B) = P(A) \cdot P(B)$

$P(A \cap B) = P(B)\, P(A/B)$

Ex-1 IF A and B are two events such that $P(A) = 3/8$, $P(B) = 5/8$ and $P(A \cup B) = 3/4$, find $P(A/B)$ and $P(B/A)$. show whether A and B are independent.

Solⁿ:- $P(A \cup B) = P(A) + P(B) - P(A \cap B)$

$3/4 = 3/8 + 5/8 - P(A \cap B)$

$P(A \cap B) = 3/8 + 5/8 - 3/4 = 1/4$

$$P(A/B) = \frac{P(A \cap B)}{P(B)} = \frac{(1/4)}{(5/8)} = \frac{2}{5}$$

$$P(B/A) = \frac{P(A \cap B)}{P(A)} = \frac{(1/4)}{(3/8)} = \frac{2}{3}$$

$$P(A)\,P(B) = 3/8 \times 5/8 = \frac{15}{64}$$

$P(A \cap B) \neq P(A)\,P(B)$

Hence, the even A and event B are not independent

Ex-2 The probability that a student A solves mathematics problem is $2/5$ and the probability that a student B solves it is $2/3$, What is the probability that

i] the problem is not solved

ii] the problem is solved and

iii] book A and B, working independently of each other, solve the problem?

Atmiya University

Solⁿ :- Let A and B be events that students A and B solve the problem respectively.

$$P(A) = \frac{2}{5}, \quad P(B) = \frac{2}{3}$$

Events A and B are independent.

Probability that the student A does not solve the problem

$$P(\bar{A}) = 1 - P(A) = 1 - \frac{2}{5} = \frac{3}{5}$$

Probability that the student B does not solve the problem

$$P(\bar{B}) = 1 - P(B) = 1 - \frac{2}{3} = \frac{1}{3}$$

i) Probability that the problem is not solved

$$P(\bar{A} \cap \bar{B}) = P(\bar{A})\,P(\bar{B})$$

$$= \frac{3}{5} \times \frac{1}{3} = \frac{1}{5}$$

ii) Probability that the problem is solved

$$P(A \cup B) = 1 - P(\bar{A} \cap \bar{B})$$

$$= 1 - \frac{1}{5} = \frac{4}{5}$$

iii) Probability that both A and B solve the problem

$$P(A \cap B) = P(A)\,P(B)$$

$$= \frac{2}{5} \times \frac{2}{3} = \frac{4}{15}$$

Atmiya University Rajkot

Teacher's Signature

Ex-3 The probability that the machine A will perform a usual function in 5 years time is 1/4, while the probability that the machine B will perform the function in 5 years' time is 1/3. Find the probability that both machines will perform the usual function.

Sol^n:- Let A and B be the events the machines A & B will perform the usual function respectively

$$P(A) = \frac{1}{4} \quad \text{and} \quad P(B) = \frac{1}{3}$$

Events A and B are independent.

Probability the both machines will perform the usual function

$$P(A \cap B) = P(A)\,P(B) = \frac{1}{4} \times \frac{1}{3} = \frac{1}{12}$$

Ex-4 A person A is known to hit a target in 3 out of 4 shots, whereas another person B is known to hit the same target in 2 out of 3 shots. Find the probability of the target being hit at all when they both try.

Sol^n:- let A and B be the events that the persons A and B hit the target respectively.

$$P(A) = \frac{3}{4} \quad \& \quad P(B) = \frac{2}{3}$$

Atmiya University

Events A and B are Independent.

Probability that the person A will not hit the target $= P(\bar{A}) = 1 - P(A)$

$$= 1 - \frac{3}{4} = \frac{1}{4}$$

Probability that the person B will not hit the target $= P(\bar{B}) = 1 - P(B)$

$$= 1 - \frac{2}{3} = \frac{1}{3}$$

Probability that the target is not hit at all

$$P(\bar{A} \cap \bar{B}) = P(\bar{A})P(\bar{B})$$

$$= \frac{1}{4} \times \frac{1}{3} = \frac{1}{12}$$

Probability that the target is ~~not~~ hit at all when they both try

$$P(A \cup B) = 1 - P(\bar{A} \cap \bar{B})$$

$$= 1 - \frac{1}{12} = \frac{11}{12}$$

Ex-5.2 The odds against A speaking the truth are 4:6, while the odds in favour of B speaking the truth are 7:3. What is probability that A and B contradict each other in stating the same fact?

Sol^n Let A and B be events that A and B speak the truth respectively

$$P(A) = \frac{6}{10} \quad \& \quad P(B) = \frac{7}{10}$$

Atmiya University Rajkot

Events A and B are independent

Probability that A speaks a lie

$$= P(\bar{A}) = 1 - P(A) = 1 - \frac{6}{10} = \frac{4}{10}$$

Probability that B speaks a lie

$$= P(\bar{B}) = 1 - P(B) = 1 - \frac{7}{10} = \frac{3}{10}$$

Probability that A and B contradict each other

$$P[(A \cap \bar{B}) \cup (\bar{A} \cap B)] = P(A \cap \bar{B}) + P(\bar{A} \cap B)$$

$$= P(A)\,P(\bar{B}) + P(\bar{A})\,P(B)$$

$$= \frac{6}{10} \times \frac{3}{10} + \frac{4}{10} \times \frac{7}{10} = \frac{23}{50}$$

[$\because$ $(A \cap \bar{B})$ and $(\bar{A} \cap B)$ are mutually exclusive events]

Ex-6] An urn contains 10 red, 5 white and 5 blue balls. Two balls are drawn at random. Find the probability that they are not of the same colour.

Sol^n:- Let A, B and C be the events that two balls drawn at random be of the same colour, i.e., red, white and blue respectively.

$$P(A) = \frac{{}^{10}C_2}{{}^{20}C_2} = \frac{9}{38}$$

$$P(B) = \frac{{}^{5}C_2}{{}^{20}C_2} = \frac{1}{19}$$

$$P(C) = \frac{{}^{5}C_2}{{}^{20}C_2} = \frac{1}{19}$$

Events A, B and C are independent.

Atmiya University Rajkot

Probability that both balls drawn are of same colour

$$P(A \cup B \cup C) = P(A) + P(B) + P(C)$$

$$= \frac{9}{38} + \frac{1}{19} + \frac{1}{19} = \frac{13}{38}$$

Probability that both balls drawn are not of the same colour

$$P(\bar{A} \cap \bar{B} \cap \bar{C}) = 1 - P(A \cup B \cup C)$$

$$= 1 - \frac{13}{38} = \frac{25}{38}$$

Ex-7 A problem in statistics is given to three students A, B and C, whose chances of solving it independently are $\frac{1}{2}$, $\frac{1}{3}$ and $\frac{1}{4}$ respectively.

Find the probability that.

i] the problem is solved

ii] at least two of them are able to solve the problem.

iii] Exactly two of them are able to solve the problem

iv] Exactly one of them is able to solve the problem

Soln:- let A, B and C be the events that students A, B and C solve the problem respectively,

$$P(A) = \frac{1}{2}, \quad P(B) = \frac{1}{3}, \quad P(C) = \frac{1}{4}$$

Events A, B and C are independent.

Atmiya University Rajkot

i] Probability that the problem is solved or at least one of them is able to solve the problem is same.

$P(A \cup B \cup C) = P(A) + P(B) + P(C) - P(A \cap B) - P(A \cap C) - P(B \cap C) + P(A \cap B \cap C)$

$= P(A) + P(B) + P(C) - P(A)P(B) - P(A)P(C) - P(B)P(C) + P(A)P(B)P(C)$

$= \frac{1}{2} + \frac{1}{3} + \frac{1}{4} - \left(\frac{1}{2} \times \frac{1}{3}\right) - \left(\frac{1}{2} \times \frac{1}{4}\right) - \left(\frac{1}{3} \times \frac{1}{4}\right) + \left(\frac{1}{2} \times \frac{1}{3} \times \frac{1}{4}\right)$

$= \frac{3}{4}$

ii] Probability that at least two of them are able to solve the problem

$P[(A \cap B) \cup (B \cap C) \cup (A \cap C)]$

$= P(A \cap B) + P(B \cap C) + P(A \cap C) - 2P(A \cap B \cap C)$

$= P(A)P(B) + P(B)P(C) + P(A)P(C) - 2P(A)P(B)P(C)$

$= \left(\frac{1}{2} \times \frac{1}{3}\right) + \left(\frac{1}{3} \times \frac{1}{4}\right) + \left(\frac{1}{2} \times \frac{1}{4}\right) - 2\left(\frac{1}{2} \times \frac{1}{3} \times \frac{1}{4}\right)$

$= \frac{7}{24}$

iii] Probability that exactly two of them are able to solve the problem

$P[(A \cap B \cap \bar{C}) \cup (A \cap \bar{B} \cap C) \cup (\bar{A} \cap B \cup C)]$

$= P(A \cap B) + P(B \cap C) + P(A \cap C) - 3P(A \cap B \cap C)$

$= P(A)P(B) + P(B)P(C) + P(A)P(C) - 3P(A)P(B)P(C)$

$= \left(\frac{1}{2} \times \frac{1}{3}\right) + \left(\frac{1}{3} \times \frac{1}{4}\right) + \left(\frac{1}{2} \times \frac{1}{4}\right) - 3\left(\frac{1}{2} \times \frac{1}{3} \times \frac{1}{4}\right)$

$= \frac{1}{4}$

Atmiya University Rajkot

iv] Probability that exactly one of them is able to solve the problem

$P[(A \cap \bar{B} \cap \bar{C}) \cup (\bar{A} \cap B \cap \bar{C}) \cup (\bar{A} \cap \bar{B} \cap C)]$

$= P(A) + P(B) + P(C) - 2P(A \cap B) - 2P(B \cap C) - 2P(A \cap C) + 3P(A \cap B \cap C)$

$= \frac{1}{2} + \frac{1}{3} + \frac{1}{4} - 2\left(\frac{1}{2} \times \frac{1}{3}\right) - 2\left(\frac{1}{3} \times \frac{1}{4}\right) - 2\left(\frac{1}{2} \times \frac{1}{4}\right) + 3\left(\frac{1}{2} \times \frac{1}{3} \times \frac{1}{4}\right)$

$= \frac{11}{24}$

Ex-8 A husband and wife appeared in an interview for two vacancies in an office. The probability of the husband's selection is 1/7 and that of the wife's selection is 1/5. Find the probability that i] both of them are selected,
ii] Only one of them is selected,
iii] None of them is selected and
iv] at least one of them is selected.

Sol^n :-

Atmiya University Rajkot

PAGE NO.
DATE: / /

Atmiya University
Rajkot

Teacher's Signature_____

* Bayes' theorem

State :- Let $A_1, A_2, \ldots, A_n$ be n mutually exclusive and exhaustive events with $P(A_i) \neq 0$ for $i = 1, 2, \ldots, n$ in a sample space S. Let B be an event that can occur in combination with any one of the events $A_1, A_2, \ldots A_n$ with $P(B) \neq 0$. The probability of the event A_i when the event B has actually occurred is given by

$$P(A_i | B) = \frac{P(A_i)\, P(B|A_i)}{\sum_{i=1}^{n} P(A_i)\, P(B|A_i)}$$

Proof :- Since $A_1, A_2, \ldots, A_n$ are n mutually exclusive and exhaustive events of the sample space S.

$$S = A_1 \cup A_2 \cup \ldots \cup A_n$$

Since B is another event that can occur in combination with any of the mutually exclusive and exhaustive events $A_1, A_2, \ldots, A_n$,

$$B = (A_1 \cap B) \cup (A_2 \cap B) \cup \ldots \cup (A_n \cap B)$$

Taking probability of both the sides,

$$P(B) = P(A_1 \cap B) + P(A_2 \cap B) + \ldots + P(A_n \cap B)$$

The events $(A_1 \cap B)$, $(A_2 \cap B)$, etc., are mutually exclusive.

$$P(B) = \sum_{i=1}^{n} P(A_i \cap B) = \sum_{i=1}^{n} P(A_i)\, P(B|A_i)$$

Atmiya University Rajkot

The conditional probability of an event A given that B has already occurred is given by

$$P(A_i/B) = \frac{P(A_i \cap B)}{P(B)}$$

$$= \frac{P(A_i)\,P(B/A_i)}{P(B)} = \frac{P(A_i)\,P(B/A_i)}{\sum_{i=1}^{n} P(A_i)\,P(B/A_i)}$$

Ex-1] A company has two plants to manufacture hydraulic machines. Plant I manufactures 70% of the hydraulic machines, and Plant II manufactures 30%. At Plant I, 80% of hydraulic machines are rated standard quality; and plant II, 90% of hydraulic machines are rated standard quality. A machine is picked up at random and is found to be of standard quality. What is the chance that it has come from Plant I ?

Solⁿ:- Let A_1 and A_2 be the events that the hydraulic machines are manufactured in Plant I and Plant - II respectively.
Let B be the event that the machine picked up is found to be of standard quality.

$$P(A_1) = \frac{70}{100} = 0.7$$

$$P(A_2) = \frac{30}{100} = 0.3$$

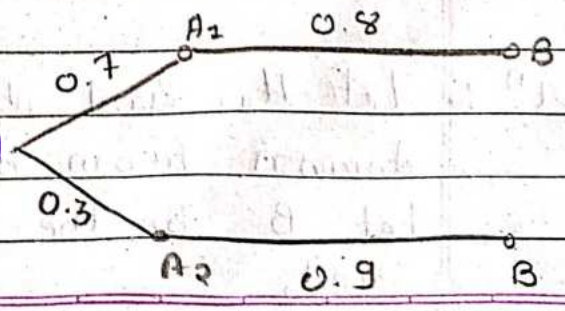

Atmiya University Rajkot

Probability that the machine is of standard quality given that it is manufactured in Plant I

$$P(B/A_1) = \frac{80}{100} = 0.8$$

Probability that the machine is of standard quality given that it is manufactured in Plant II

$$P(B/A_2) = \frac{90}{100} = 0.9$$

Probability that a machine is manufactured in Plant I given that it is of standard quality

$$P(A_1/B) = \frac{P(A_1)\,P(B/A_1)}{P(A_1)P(B/A_1) + P(A_2)\,P(B/A_2)}$$

$$= \frac{0.7 \times 0.8}{0.7 \times 0.8 + 0.3 \times 0.9}$$

$$= \underline{\underline{0.6747}}$$

Ex - 3 A bag A contains 2 white and 3 red balls and a bag B contains 4 white and 5 red balls. One ball is drawn at random from one of the bags and it is found to be red. Find the probability that the red ball is drawn from the bag B

Sol^n :- Let A_1 and A_2 be the events that the ball is drawn from bags A and B respectively. Let B be the event that the ball drawn is red.

Atmiya University Rajkot

$P(A_1) = \frac{1}{2}$, $P(A_2) = \frac{1}{2}$

Probability that the ball drawn is red given that it is drawn from the bag A

$P(B/A_1) = \frac{3}{5}$

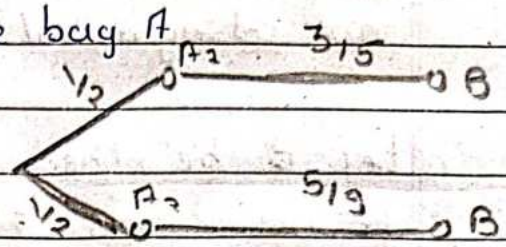

Probability that the ball drawn is red given that it is drawn from the bag B

$P(B/A_2) = \frac{5}{9}$

Probability that the ball is drawn from the bag B given that it is red

$$P(A_2/B) = \frac{P(A_2)\,P(B/A_2)}{P(A_1)\,P(B/A_1) + P(A_2)\,P(B/A_2)}$$

$$= \frac{\frac{1}{2} \times \frac{5}{9}}{\left(\frac{1}{2} \times \frac{3}{5}\right) + \left(\frac{1}{2} \times \frac{5}{9}\right)} = \frac{25}{52}$$

Ex-3 :- The chances that Doctor A will diagnose a disease X correctly is 60%. The chances that a patient will die by his treatment after correct diagnosis is 40% and the chance of death by wrong diagnosis is 70%. A patient of Doctor A, who had the disease X, died. What is the chance that his disease was diagnosed correctly?

Atmiya University Rajkot

Sol^n:- Let A_1 be the event that the disease X is diagnosed correctly by Doctor A.
Let A_2 be the event that the disease X is not diagnosed correctly by Doctor A.

Let B be the event that a patient of Doctor A who has the disease X, dies.

$$P(A_1) = \frac{60}{100} = 0.6$$

$$P(A_2) = P(\bar{A}_1) = 1 - P(A_1) = 0.4$$

Probability that the patient of Doctor A who has the disease X dies given that the disease X is diagnosed correctly

$$P(B/A_1) = \frac{40}{100} = 0.4$$

Probability that the patient of Doctor A who has the disease X dies given that the disease X is not diagnosed correctly

$$P(B/A_2) = \frac{70}{100} = 0.7$$

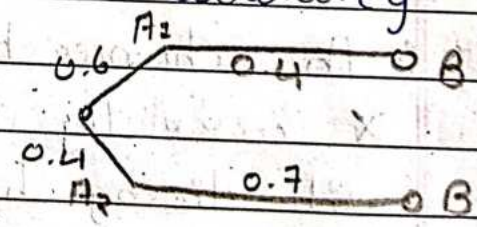

Probability that the disease X is diagnosed correctly given that a patient of Doctor A who has the disease X dies

$$P(A_1/B) = \frac{P(A_1)\,P(B/A_1)}{P(A_1)\,P(B/A_1) + P(A_2)\,P(B/A_2)}$$

$$= \frac{0.6 \times 0.4}{(0.6 \times 0.4) + (0.4 \times 0.7)} = \frac{6}{13}$$

Amity University Raipur

Ex-4 In a bolt factory, machines A, B, C manufacture 25 %, 35 % and 40 % of the total output and out of the total manufacturing, 5 %, 4 % and 2% are defective bolts. A bolts is drawn at random from the product and is found to be defective. Find the probabilities that it is manufactured from i] machine A, ii] machine B and iii] machine C.

Soln/ Let A_1, A_2 and A_3 be the events that bolts are manufactured machines A, B and C respectively. Let B be the event that the bolt drawn is defective.

$P(A_1) = \frac{25}{100} = 0.25$

$P(A_2) = \frac{35}{100} = 0.35$

$P(A_3) = \frac{40}{100} = 0.4$

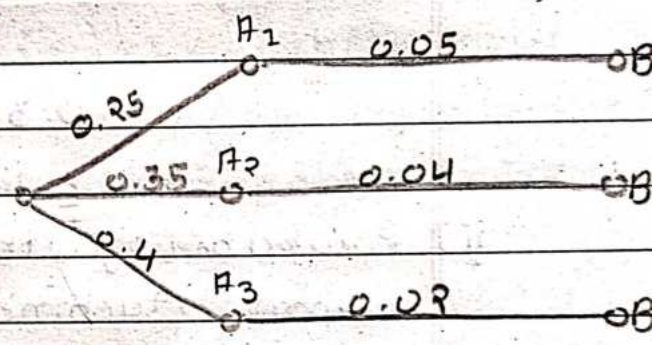

Probability that the bolt drawn is defective given that it is manufactured from Machine A.

$$P(B/A_1) = \frac{5}{100} = 0.05$$

Probability that the bolt drawn is defective given that it is manufactured from Machine B.

$$P(B/A_2) = \frac{4}{100} = 0.04$$

Atmiya University Rajkot

PAGE NO.
DATE: / /

Probability that the bolt drawn is defective given that it is manufactured from Machine C

$$P(B/A_3) = \frac{2}{100} = 0.02$$

i) Probability that a bolt is manufactured from Machine A given that it is defective

$$P(A_1/B) = \frac{P(A_1)\,P(B/A_1)}{P(A_1)\,P(B/A_1) + P(A_2)\,P(B/A_2) + P(A_3)\,P(B/A_3)}$$

$$= \frac{0.25 \times 0.25}{(0.25 \times 0.05) + (0.35 \times 0.04) + (0.4 \times 0.02)}$$

$$= 0.3623$$

ii) Probability that a bolt is manufactured from Machine B given that it is defective

$$P(A_2/B) = \frac{P(A_2)\,P(B/A_2)}{P(A_1)\,P(B/A_1) + P(A_2)\,P(B/A_2) + P(A_3)\,P(B/A_3)}$$

$$= \frac{0.35 \times 0.04}{(0.25 \times 0.05) + (0.35 \times 0.04) + (0.4 \times 0.02)}$$

$$= 0.4058$$

iii) Probability that a bolt is manufactured from Machine C given that it is defective

Atmiya University Rajkot

Teacher's Signature

$$P(A_3/B) = \frac{P(A_3)\,P(B/A_3)}{P(A_1)\,P(B/A_1) + P(A_2)\,P(B/A_2) + P(A_3)\,P(B/A_3)}$$

$$= \frac{0.4 \times 0.02}{(0.25 \times 0.05) + (0.35 \times 0.04) + (0.4 \times 0.02)}$$

$$= 0.2319$$

Ex-5 The contents of urns I, II and III are as follows;
1 White, 2 red and 3 black balls,
2 white, 3 red and 1 black ball, and
3 white, 1 red, and 2 black balls.
One urn is chosen at random and two balls are drawn. They happen to be white and red. Find the probability that they came from i] Urn I, ii] Urn II & iii] Urn III

Sol^n:- Let A_1, A_2 and A_3 be the events that urns I, II and III are choosen respectively. Let B be the event that 2 balls drawn are white and red.

$P(A_1)$

$P(A_1) = \frac{1}{3}$

$P(A_2) = \frac{1}{3}$

$P(A_3) = \frac{1}{3}$

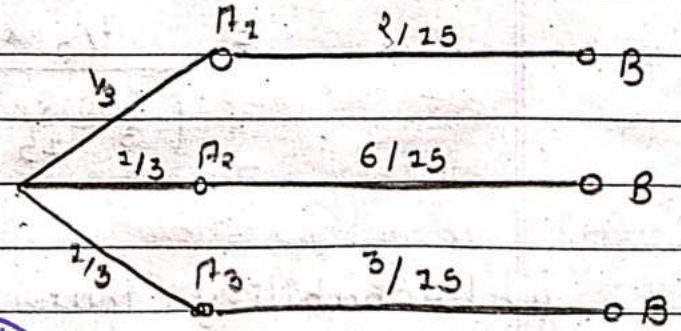

Probability that 2 balls drawn are white and red given that they are chosen from the urn I

Atmiya University Rajkot

$$P(B/A_1) = \frac{{}^1C_1 \times {}^2C_1}{{}^6C_2} = \frac{1 \times 2}{15} = \frac{2}{15}$$

Probability that 2 balls drawn are white and red given that they are chosen from the urn II

$$P(B/A_2) = \frac{{}^2C_1 \times {}^3C_1}{{}^6C_2} = \frac{2 \times 3}{15} = \frac{6}{15}$$

Probability that 2 balls drawn are white and red given that they are chosen from the urn III

$$P(B/A_3) = \frac{{}^3C_1 \times {}^1C_1}{{}^6C_2} = \frac{3 \times 1}{15} = \frac{3}{15}$$

i) Probability that 2 balls came from the urn I given that they are white and red

$$P(A_1/B) = \frac{P(A_1)\,P(B/A_1)}{P(A_1)\,P(B/A_1) + P(A_2)\,P(B/A_2) + P(A_3)\,P(B/A_3)}$$

$$= \frac{1/3 \times 2/15}{\left(\frac{1}{3} \times \frac{2}{15}\right) + \left(\frac{1}{3} \times \frac{6}{15}\right) + \left(\frac{1}{3} \times \frac{3}{15}\right)} = \boxed{\frac{2}{11}}$$

ii) Probability that 2 balls came from the urn II given that they are white and red

Atmiya University Rajkot

$$P(A_2/B) = \frac{P(A_2)\,P(B/A_2)}{P(A_1)\,P(B/A_1) + P(A_2)\,P(B/A_2) + P(A_3)\,P(B/A_3)}$$

$$= \frac{1/3 \times 6/15}{\left(\frac{1}{3}\times\frac{2}{15}\right)+\left(\frac{1}{3}\times\frac{6}{15}\right)+\left(\frac{1}{3}\times\frac{3}{15}\right)} = \boxed{\frac{6}{11}}$$

iii] Probability that 2 balls came from the urn III given that they are white and red.

$$P(A_3/B) = \frac{P(A_3)\,P(B/A_3)}{P(A_1)\,P(B/A_1) + P(A_2)\,P(B/A_2) + P(A_3)\,P(B/A_3)}$$

$$= \frac{1/3 \times 3/15}{\left(\frac{1}{3}\times\frac{2}{15}\right)+\left(\frac{1}{3}\times\frac{6}{15}\right)+\left(\frac{1}{3}\times\frac{3}{15}\right)} = \boxed{\frac{3}{11}}$$

* Random variable :-

If S is a sample space with a probability meas are and X is real valued fun defined over the elements of S, then X is called a random variable

Ex :- When a fair coin is tossed, $S = \{H, T\}$;
If X is the random variable denoting the number of heads then

$X(H) = 1$ $X(T) = 0$

Hence, the random variable X can take values 0 & 1.

Atmiya University Rajkot

* Types of random variable :-

i] Dicrete R.V. :-

If it takes either finite or countably infinite values.
i.e. if takes only isolated values
Ex :- a] No. of children in a family
b] No. of days of rainfall in a city

ii] Continuous R.V. :-

If it takes any values in a given interval.
i.e. it takes uncountably infinite values.

Ex :- a] Height of a person in Cm
b] Volume of a gas in cc [Cubic capacity]

* Probability distribution :-

Probability distribution of a R.V. is the set of its possible values together with their respective probabilites.

Let X be a discrite R.V. which takes the values $x_1, x_2, ---, x_n$. The probability of each possible outcome x_i is $p_i = P(x_i)$
$= P(x = x_i)$ for $i = 1, 2, ---, n$

The number $P(x_i)$, $i = 1, 2, -----$
must satisfy the following conditions

Atmiya University Rajkot

i) $p(x_i) \geq 0$; $\forall i$

ii) $\sum_{i=1}^{n} p(x_i) = 1$

The fun^n $p(x_i)$ is called the probability fun^n or probability muss fun^n or probability density fun^n of R.V. X. The set of pairs $\{x_i, p(x_i)\}$, $i=1,\dots,n$ is called the probability distribution of R.V

$X = x_i$	x_1	x_2	----	x_n
$P(x_i) = P(X = x_i)$	$p(x_1)$	$p(x_2)$	---	$p(x_n)$

* Discrete distribution fun^n :-

Let X be a discrete R.V. which takes the values $x_1, x_2, \dots$ $\ni$ $x_1 < x_2 < \dots$ with probabilities $p(x_i) \geq 0$ & values of i

& $\sum_{i=1}^{n} p(x_i) = 1$

The distribution fun^n $f(x)$ of the discrete R.V. X is defined by

$$f(x) = P(X \leq x) = \sum_{i=1}^{x} p(x_i)$$

where 'x' is any integer. The fun^n $F(x)$ is also cumulative distribution fun^n. The set of pairs $\{x_i, f(x_i)\}$, $i = 1, 2, \dots$ is called cumulative probability distribution

X	x_1	x_2	x_3	----
$f(x)$	$p(x_1)$	$p(x_1) + p(x_2)$	$p(x_1) + p(x_2) + p(x_3)$	---

Atmiya University Rajkot

Ex - Find the probability distribution of the no. of heads when three coins are tossed.

Sol^n :- When three coins are tossed

$S = \{HHH, HHT, HTH, THH, HTT, THT, TTH, TTT\}$

Let X be the R.V. of getting heads in tossing of three coins.

Hence X can takes the value 0, 1, 2, 3

$P(X=0) = P(\text{no head}) = \frac{1}{8}$ $\{P(TTT)\}$

$P(X=1) = P(\text{one head}) = \frac{3}{8}$

$P(X=2) = P(\text{two heads}) = \frac{3}{8}$

$P(X=3) = P(\text{three heads}) = \frac{1}{8}$

Hence, the probability distribution of X is

$X = x$	0	1	2	3
$P(X=x)$	1/8	3/8	3/8	1/8

Also $\sum P(X=x) = \frac{1}{8} + \frac{3}{8} + \frac{3}{8} + \frac{1}{8}$

$= 1$

Atmiya University Rajkot

Random Variables : Probability distribution

Random Var. :- If S is a sample space with a probability measure & X is a real-valued function defined over the elements of S, then X is called a random variable.

(ex) When a fair coin is tossed, $S = \{H, T\}$; If X is the random variable denoting the number of heads then

$$X(H) = 1 \quad \& \quad X(T) = 0.$$

Hence, the random variable X can take values 0 & 1.

Types of random variable :-

(i) **Discrete R.V. :-** If it takes ~~only~~ either finite or countably infinite values. i.e. it takes only isolated values.

e.g. (a) No. of children in a family
(b) No. of days of rainfall in a city.

(ii) **Continuous R.V. :-** If it takes any values in a given interval. i.e., it takes ~~only~~ uncountably infinite values, e.g.

(a) Height of a person in cm
(b) Volume of a gas in cc. (cubic capacity)

Probability distribution :- P.d. of a random var. is the set of its possible values together with their respective probabilities.

Let X be a discrete r.v. which takes the values $x_1, x_2, \ldots, x_n$. The probability of

Atmiya University Rajkot

Scanned with CamScanner

each possible outcome x_i is $p_i = p(x_i)$ $= p(X = x_i)$ for $i = 1, 2, \ldots n$. The number $p(x_i)$, $i = 1, 2, \ldots$ must satisfy the following conditions

(i) $p(x_i) \geq 0 \ \forall \ i$

(ii) $\sum_{i=1}^{n} p(x_i) = 1$

The function $p(x_i)$ is called the probability function or probability mass function or probability density fn of r.v. X. The set of pairs $\{x_i, p(x_i)\}$, $i = 1, 2, \ldots n$ is called the probability distribution of r.v.

$X = x_i$	x_1	x_2	$\ldots$	x_n
$p(x_i) = P(X = x_i)$	$p(x_1)$	$p(x_2)$		$p(x_n)$

Discrete distribution fn :- Let X be a discrete r.v. which takes the values $x_1, x_2, \ldots$ s.t. $x_1 < x_2 < \ldots$ with probabilities $p(x_i) \geq 0 \ \forall$ values of i & $\sum_{i=1}^{n} p(x_i) = 1$

The distribution function $F(x)$ of the discrete r.v. X is defined by

$$F(x) = P(X \leq x) = \sum_{i=1}^{x} p(x_i)$$

where 'x' is any integer. The fn $F(x)$ is also cumulative distribution function. The set of pairs $\{x_i, F(x_i)\}$, $i = 1, 2, \ldots$ is

Atmiya University Rajkot

Scanned with CamScanner

called cumulative probability distribution.

X	x_1	x_2	...
$F(X)$	$p(x_1)$	$p(x_1)+p(x_2)$	...

Ex. Find the probability distribution of the no. of heads when three coins are tossed.

Sol^n when three coins are tossed

$S = \{HHH, HHT, HTH, THH, HTT, THT, TTH, TTT\}$

Let X be the r.v. of getting heads in tossing of three coins. Hence X can ~~take~~ takes the value 0, 1, 2, 3

$P(X=0) = P(\text{no head}) = \frac{1}{8}$ $\{P(TTT)\}$

$P(X=1) = P(\text{one head}) = \frac{3}{8}$

$P(X=2) = P(\text{two heads}) = 3/8$

$P(X=3) = P(\text{three heads}) = 1/8$

Hence, the probability distribution of X is

$X=x$	0	1	2	3
$P(X=x)$	$1/8$	$3/8$	$3/8$	$1/8$

Also $\Sigma P(X=x) = \frac{1}{8} + \frac{3}{8} + \frac{3}{8} + \frac{1}{8} = 1$

Atmiya University Rajkot

Scanned with CamScanner

Ex. A r.v. X has the following prob. dist.

X	0	1	2	3	4	5	6	7
$P(X=x)$	a	$4a$	$3a$	$7a$	$8a$	$10a$	$6a$	$9a$

(i) Find the value of a

(ii) Find $P(X<3)$

(iii) Find the smallest value of m for which $P(X \le m) \geq 0.6$

Ans (i) $a = 1/48$

(ii) $1/6$

(iii) $M=5$

Ex. A r.v. X has the following prob. fn:-

X	-2	-1	0	1	2	3
$P(X=x)$	0.1	k	0.2	$2k$	0.3	k

Find (i) k

(ii) $P(X \le 1)$

(iii) $P(-2 < X < 1)$

& (iv) obtain the distribution fn of X.

Sol:

(i) 0.1

(ii) 0.6

(iii) 0.3

Atmiya University Rajkot

Scanned with CamScanner

Def :- If X is a cts r.v. & the value of its probab. density at 't' is $f(t)$, then the f^n given by

$$F(x) = P(X \le x) = \int_{-\infty}^{x} f(t)\,dt \quad \text{for } -\infty < x < \infty$$

is called the distribution function or the cumulative distribution of X.

Properties :-

(i) $F(-\infty) = 0$ & $F(\infty) = 1$

(ii) if $a < b$ then $F(a) \le F(b)$ for any real no. a & b.

(iii) $P(a \le X \le b) = F(b) - F(a)$

$P(a < X < b) = F(b) - F(a)$ (for cts)

(iv) $F'(x) = \frac{d}{dx}\left(F(x)\right) = f(x)$; $f(x) \ge 0$

(v) $0 \le F(x) \le 1$, $-\infty < x < \infty$ //

Ex Show that the function $f(x)$ defined by

$$f(x) = \begin{cases} \frac{1}{7} & 1 < x < 8 \\ 0 & o/w \end{cases}$$

is a prob. density function for a r.v. Find $P(3 < X < 10)$

Sol^n $f(x) \ge 0$ in $1 < x < 8$.

$$\int_{-\infty}^{\infty} f(x)\,dx = \int_{-\infty}^{1} f(x)\,dx + \int_{1}^{8} f(x)\,dx + \int_{8}^{\infty} f(x)\,dx$$

Atmiya University Rajkot

Scanned with CamScanner

$$= 0 + \int_1^8 \frac{1}{7}\,dx + 0$$

$$= \frac{1}{7}|x|_1^8 = \frac{1}{7}(8-1)$$

$$= 1$$

Hence, $f(x)$ is a probability density fun.

$$P(3 < X < 10) = \int_3^{10} f(x)\,dx.$$

$$= \int_3^8 f(x)\,dx + \int_8^{10} f(x)\,dx$$

$$= \frac{1}{7}x\Big|_3^8 + 0$$

$$= \frac{1}{7}(8-3) = \frac{5}{7}.$$

Que. Is the function $f(x)$ defined by

$$f(x) = \begin{cases} e^{-x} & x \geq 0 \\ 0 & x < 0 \end{cases}$$

is a prob. density fun. If so, find the prob. that the variate having this density falls in the interval $(1,2)$

Sol: $f(x) \geq 0$ in $(0,\infty)$

$$\int_{-\infty}^{\infty} f(x)\,dx = \int_{-\infty}^{0} f(x)\,dx + \int_0^{\infty} f(x)\,dx.$$

$$= 0 + \int_0^{\infty} e^{-x}\,dx$$

$$= -e^{-x}\Big|_0^{\infty} = 1$$

Atmiya University Rajkot

Scanned with CamScanner

Hence, $f(x)$ is a prob. density f^n.

$$P(1 \le X \le 2) = \int_1^2 f(x)\,dx$$

$$= \int_1^2 e^{-x}\,dx = -e^{-x}\Big|_1^2$$

$$= -e^{-2} + e^{-1}$$

$$= 0.233.$$

{As cts.

$$P(1 \le X \le 2) = F(2) - F(1)$$

$$= \cancel{e^{-2}} + \cancel{e^{-1}}$$

$$F(x) = \int f(x) = \int e^{-x} = -e^{-x}.$$

Same }

Q. Find the constant 'k' s.t. the function

$$f(x) = \begin{cases} kx^2 & 0 < x < 3 \\ 0 & o/w. \end{cases}$$

is a prob. density f^n & compute

(i) $P(1 < x < 2)$

(ii) $P(X < 2)$

(iii) $P(X \geq 2)$

Ans $k = 1/9$ (i) $7/27$ (ii) $8/27$ (iii) $19/27$.

Q. If X is a cts r.v. with pdf

$$f(x) = \begin{cases} x^2 & 0 \le x \le 1 \\ 0 & o/w \end{cases}$$

If $P(a \le X \le 1) = 19/27$ find the value of a

Sol^n

$$a = \frac{46}{27}$$

//

Amity University Rajkot

Scanned with CamScanner

Q. Let the cts r.v. X have the prob. density fx^n.

$$f(x) = \begin{cases} 2/x^3 & 1 < x < \infty. \\ 0 & o/w. \end{cases}$$

find F(x)

Sol^n

$$F(x) = \int_{-\infty}^{x} f(x)\, dx.$$

$$= \int_{-\infty}^{1} f(x)\, dx + \int_{1}^{x} f(x)\, dx$$

$$= 0 + \int_{1}^{x} \frac{2}{x^3}\, dx = 1 - \frac{1}{x^2}$$

$$f(x) = \begin{cases} 1 - \frac{1}{x^2} & 1 < x < \infty \\ 0. & o/w \end{cases}$$

Q. Verify the fx^n F(x) is a distribution fx^n.

$$F(x) = \begin{cases} 0 & x < 0 \\ 1 - e^{-x/4} & x \geq 0 \end{cases}$$

Also, find the proba.

$P(X \leq 4)$, $P(X \geq 8)$, $P(4 \leq X \leq 8)$

Sol^n.

If f(x) is the corresponding pdf.

$$f(x) = F'(x) = \begin{cases} 0 & x < 0 \\ \frac{1}{4} e^{-x/4} & x \geq 0 \end{cases}$$

$$\int_{-\infty}^{\infty} f(x)\, dx = \int_{-\infty}^{0} f(x)\, dx + \int_{0}^{\infty} f(x)\, dx$$

Atmiya University Rajkot

Scanned with CamScanner

$$= 0 + \int_0^\infty \frac{1}{4} e^{-x/4}\, dx.$$

$$= \frac{1}{4} \left| \frac{e^{-x/4}}{-1/4} \right|_0^\infty = \underline{\underline{1}}$$

Hence, $f(x)$ is a distribution f^n.

$$P(X \le 4) = F(4) = 1 - e^{-1} = 1 - \frac{1}{e} = \underline{\underline{\frac{e-1}{e}}}.$$

$$P(X \geq 8) = 1 - P(X \le 8)$$
$$= 1 - F(8)$$
$$= 1 - (1 - e^{-2})$$
$$= e^{-2}$$
$$= 1/e^2.$$

$$P(4 \le X \le 8) = F(8) - F(4) = \frac{e-1}{e^2}.$$

Excercise :

(1) Verify whether the following functions are probability density functions:

(i) $f(x) = ke^{-kx}$ $\quad x \geq 0,\ k > 0$

(ii) $f(x) = \frac{1}{2} e^{-|x|}$ $\quad -\infty < x < \infty$

(iii) $f(x) = \frac{2}{9} x \left(2 - \frac{x}{2}\right)$ $\quad 0 \le x \le 3$

[(i) Yes (ii) ✓ (iii) ✓]

(2) Let X be a cts r.v. with probability distn.

$$f(x) = \begin{cases} \frac{x}{6} + k & 0 \le x \le 3 \\ 0 & o/w. \end{cases}$$

Find k, & $P(1 \le X \le 2)$ [Ans: 1, $\frac{1}{3}$]

Atmiya University Rajkot

Scanned with CamScanner

Page No.:
Date:

(3) The distribution function of a r.v. X is given by

$$F(x) = \begin{cases} 1-e^{-x^2} & x>0 \\ 0 & o/w \end{cases}$$

Find the probability density fn.

Ans $f(x) = \begin{cases} 2xe^{-x^2} & x>0 \\ 0 & o/w \end{cases}$

(4) The cdf of a cts r.v. X is given by

$$f(x) = \begin{cases} 0 & x<0 \\ x^2 & 0 \le x \le 1 \\ 1 & x>1 \end{cases}$$

Find the pdf & $P\left(\frac{1}{2} \le X \le \frac{4}{5}\right)$ [Ans 0.195

Atmiya University Rajkot

Scanned with CamScanner

Expected Value → If X is discrete r.v. & $f(x)$ is the value of its prob. dist. at x, the expected value of X is,

$$\mu = E(X) = \sum_x x \cdot f(x)$$

If X is continuous r.v. & $f(x)$ is the value of its prob. dist. at x, the expected value of X is.

$$\mu = E(X) = \int_{-\infty}^{\infty} x\, f(x)\, dx$$

Que. A r.v. X has the following distribution!

X	1	2	3	4	5	6
$P(X=x)$	$1/36$	$3/36$	$5/36$	$7/36$	$9/36$	$11/36$

find Expected value (Mean)

Soln.

$$\text{Mean} = \mu = E(X) = \sum x\, p(x)$$

$$= 1\left(\frac{1}{36}\right) + 2\left(\frac{3}{36}\right) + 3\left(\frac{5}{36}\right) + 4\left(\frac{7}{36}\right) + 5\left(\frac{9}{36}\right) + 6\left(\frac{11}{36}\right)$$

$$= \frac{161}{36} = \underline{\underline{4.47}}.$$

Expectation of a function of a R.V :-

Consider a r.v. X with p.d.f (p.m.f). $f(x)$ & distribution fn $F(x)$. If $g(\cdot)$ is a function s.t. $g(X)$ is a r.v. & $E[g(X)]$ exists, then

Atmiya University Rajkot

Scanned with CamScanner

$F = \Sigma f_i$

$$E(g(x)) = \int_{-\infty}^{\infty} g(x)\, dF(x)$$

$$= \int_{-\infty}^{\infty} g(x)\, f(x)\, dx. \quad \{\text{for cts f}^n\}$$

$$= \Sigma g(x) f(x) \quad \{\text{for discrete r.v.}\}$$

Addition thrm of Expectation:-

Thrm : If X & Y are r.v. then

$$E(X+Y) = E(X) + E(Y)$$

provided all the expectations exists.

Proof: Let X & Y be cts r.v's with joint p.d.f $f_{X,Y}(x,y)$ & marginal p.d.f's $f_X(x)$ & $f_Y(y)$ respectively. Then by definition:

$$E(X) = \int_{-\infty}^{\infty} x f_X(x)\, dx$$

$$E(Y) = \int_{-\infty}^{\infty} y\, f_Y(y)\, dy$$

$$E(X+Y) = \int_{-\infty}^{\infty}\int_{-\infty}^{\infty} (x+y)\, f_{X,Y}(x,y)\, dx\, dy$$

$$= \int_{-\infty}^{\infty}\int_{-\infty}^{x} x\, f_{XY}(x,y)\, dx\, dy + \int_{-\infty}^{\infty}\int_{-\infty}^{\infty} y\, f_{XY}(x,y)\, dx\, dy$$

$$= \int_{-\infty}^{\infty} x \left[\int_{-\infty}^{\infty} \quad dy \right] dx$$

Atmiya University Rajkot

Scanned with CamScanner

$$+\int_{-\infty}^{\infty} y \left[\int_{-\infty}^{\infty} f_{XY}(x,y)\,dx \right] dy$$

$$= \int_{-\infty}^{\infty} x\, f_X(x)\,dx + \int_{-\infty}^{\infty} y\, f_Y(y)\,dy$$

$$= E(X) + E(Y).$$

Joint p.d.f.:- [$F_{XY}(x,y)$]. It represents the probability that simultaneously the observation (X,Y) will have the property $(X \le x)$ & $(Y \le y)$ i.e.

$$F_{XY}(x,y) = P(-\infty < X \le x, -\infty < Y \le y)$$

$$= \int_{-\infty}^{x} \left[\int_{-\infty}^{y} f_{XY}(x,y)\,dx\,dy \right.$$

where $f_{XY}(x,y) \ge 0$ & $\int_{-\infty}^{\infty}\int_{-\infty}^{\infty} f_{XY}(x,y)\,dx\,dy = 1$

Marginal Distribution fn:- Individual distribution fn $F_X(x)$, $F_Y(y)$ are termed as marginal distribution fn of X & Y resp., w.r.t. joint distr. fn $f_{XY}(x,y)$.

$$F_X(x) = P(X \le x) = P(X \le x, Y \le \infty)$$

$$= \lim_{y \to \infty} F_{XY}(x,y)$$

$$= F_{XY}(x, \infty)$$

Illy $F_Y(y) = P(Y \le y) = P(X \le \infty, Y \le y)$

$$= \lim_{x \to \infty} F_{XY}(x,y) = F_{XY}(\infty, y).$$

Atmiya University Rajkot

Scanned with CamScanner

Pg. 5.50

Ex For the following bivariate prob. dist. of X & Y, find

(i) $P(X \le 1, Y = 2)$ (ii) $P(X \le 1)$

(iii) $P(Y = 3)$ (iv) $P(Y \le 3)$ & (v) $P(X < 3, Y \le 4)$

X \ Y	1	2	3	4	5	6
0	0	0	1/32	2/32	2/32	3/32
1	1/16	1/16	1/8	1/8	1/8	1/8
2	1/32	1/32	1/64	1/64	0	2/64

Sol^n

The marginal distributions are given below:

X \ Y	1	2	3	4	5	6	$P_X(x)$
0							8/32
1							10/16
2							8/64
$P_Y(y)$	3/32	3/32	11/64	13/64	6/32	16/64	$\Sigma P(x)=1$
							$\Sigma P(y)=1$

(i) $P(X \le 1, Y = 2)$

$= P(X=0, Y=2) + P(X=1, Y=2)$

$= 0 + \frac{1}{16} = \frac{1}{16}$

(ii) $P(X \le 1) = P(X=0) + P(X=1)$

$\frac{8}{32} + \frac{10}{16} = \frac{7}{8}$

(iii) $P(Y=3) = \frac{11}{64}$

(iv) $P(Y \le 3) = P(Y=1) + P(Y=2) + P(Y=3)$

$= \frac{3}{32} + \frac{3}{32} + \frac{11}{64} = \frac{23}{64}$

Atmiya University Rajkot

Scanned with CamScanner

(v) $P(X<3, Y\le 4) = P(X=0, Y\le 4) + P(X=1, Y\le 4) + P(X=2, Y\le 4)$

$$= \left(0+0+\frac{1}{32}+\frac{2}{32}\right) + \left(\frac{1}{16}+\frac{1}{16}+\frac{1}{8}+\frac{1}{8}\right) + \left(\frac{1}{32}+\frac{1}{32}+\frac{1}{64}+\frac{1}{64}\right)$$

$$= \frac{9}{16}.$$

Some important results on expectation:

(i) $E(X+k) = E(X) + k$

(ii) $E(aX \pm b) = a\,E(X) \pm b$

(iii) $E(X+Y) = E(X) + E(Y)$

(iv) $E(XY) = E(X)\cdot E(Y)$ if X & Y are two independent r.v.

Ex. If X has the prob. density fn

$$f(x) = \begin{cases} e^{-x} & \text{for } x>0. \\ 0 & \text{o/w} \end{cases}$$

find the expected value of $g(x) = e^{3x/4}$

Sol^n:

$$E\left[e^{3x/4}\right] = \int_0^\infty e^{3x/4}\, e^{-x}\, dx$$

$$= \int_0^\infty e^{-x/4}\, dx$$

$$= 4$$

Ex. If X is the no. of points rolled with a balanced dice, find the expected value of $g(x) = 2x^2+1$.

Atmiya University Rajkot

Scanned with CamScanner

Sol^n Since each possible outcome has the probability $1/6$, we get

$$E[g(X)] = \sum_{x=1}^{6} (2x^2+1) \cdot \frac{1}{6}$$

$$= (2\cdot 1^2+1)\frac{1}{6} + \cdots + (2\cdot 6^2+1)\frac{1}{6}$$

$$= \frac{94}{3}.$$

Moment :-

The rth moment about the origin of a r.v. X, denoted by μ_r' is the expected value of X^r,

$$\mu_r' = E(X^r) = \sum_r x^r f(x)$$

for $r = 0, 1, 2 \ldots$ when X is discrete &

$$\mu_r' = E(X^r) = \int_{-\infty}^{\infty} x^r f(x)\, dx$$

when X is cts

Def :- μ_1' is called the mean of the distribution of X, simply the mean of X. & is denoted by μ.

Def : The rth moment about the mean of a r.v. X, denoted by μ_r, is the expected value of $(X-\mu)^r$,

$$\mu_r = E(X-\mu)^r$$

$$= \sum_x (x-\mu)^r f(x) \quad r = 0, 1, 2 \ldots$$

(when X is discrete)

Atmiya University Rajkot

Scanned with CamScanner

le $\mu_r = E(X-\mu)^r = \int_{-\infty}^{\infty} (x-\mu)^r \cdot f(x)\, dx$

{when X is cts}

<u>Def</u> :- <u>Variance</u> → μ_2 is called the var. of the dist. of X, or simply the var. of X. & is denoted by σ^2, Var(X) or V(X).

Standard deviation :- the +ve square root of the variance.

i.e. $\sigma^2 = E[(X-\mu)^2]$

$= E(X^2 - 2\mu X + \mu^2)$

$= E(X^2) - 2\mu E(X) + E(\mu^2)$

$= E(X^2) - 2\mu \cdot \mu + \mu^2$

$= \mu_2' - \mu^2$.

or

$= \underline{E(X^2) - E(X)^2}$

<u>Some important results</u> :-

(i) $Var(k) = 0$

(ii) $Var(kX) = k^2 Var(X)$

(iii) $Var(X+k) = Var(X)$

(iv) $Var(aX+b) = a^2 Var(X)$

Ex The p.d.f. of a random fn X is given below. Find (i) E(X) (ii) Var(X) (iii) E(2X−3) (iv) Var(2X−3)

X	−2	−1	0	1	2
P(X=x)	0.2	0.1	0.3	0.3	0.1

Atmiya University Rajkot

Scanned with CamScanner

Ans (i) 0
(ii) 1.6
(iii) −3
(iv) 6.4.

Que Mean and standard deviation (s.d.) of a random Variable X are 5 & 4 respectively. Find $E(X^2)$ & s.d. of $(5-3X)$

Sol^n.

$E(X) = 5 = \mu$

$S.D = \sigma = 4$

$Var(X) = \sigma^2 = 16.$

$Var(X) = E(X^2) - (E(X))^2$

$16 = E(X^2) - 25$

$E(X^2) = 16 + 25$

$= 41$

$Var(5-3X) = Var(5) + (-3)^2 Var(X)$

$= 0 + 9 \times 16$

$= 144$

$S.D.(5-3X) = \sqrt{Var(5-3X)}$

$= \sqrt{144}$

$= 12$

Q. The monthly demand for Titan watches is known to have the following probability distribution

Demand (x)	1	2	3	4	5	6	7	8
Probability (p(x))	0.08	0.12	0.19	0.24	0.16	0.10	0.07	0.04

Find the expected demand for watches. Also, compute the variance

Marwadi University Rajkot

Scanned with CamScanner

Page No.: Date: YOUVA

Sol^n $E(X) = \Sigma x p(x)$
$= 4.06.$
$Var(X) = E(X^2) - (E(X))^2$
$= 3.21$ $\left[E(X^2) = \Sigma x^2 p(x) \right]$

Q. A discrete r.v. has the probability mass function given below:

X	-2	-1	0	1	2	3
$P(X=x)$	0.2	k	0.1	$2k$	0.1	$2k$

Find k, mean & variance

Sol^n $\frac{3}{25}$; $\frac{6}{25}$; $\frac{293}{625}$.

Que. The prob. that there is at least one error in an account statement prepared by A is 0.2 and for B & C, they are 0.25 and 0.4 resp. A, B & C prepared 10, 16 & 20 statements respectively. Find the expected no. of correct statements in all.

Sol^n Let $p(x_1)$, $p(x_2)$ & $p(x_3)$ be the probab. of the events that there is no error in the account statements prepared by A, B & C, respectively.

$p(x_1) = 1 -$ (Prob. of at least one error in the acc. statement prepared by A)
$= 1 - 0.2$
$= 0.8$

|||ly $p(x_2) = 1 - 0.25 = 0.75$
$p(x_3) = 1 - 0.4 = 0.6$

Also, $x_1 = 10$, $x_2 = 16$ & $x_3 = 20$
Expected no. of correct statements $= E(X) = \Sigma x p(x)$

Atmiya University Rajkot

Scanned with CamScanner

Page No.: Date: YOUVA

Moment-generating functions:-

Def:- The moment-generating function of a r.v. X, where it exists, is given by

$$M_X(t) = E(e^{tX}) = \sum_x e^{tx} \cdot f(x)$$

When X is discrete &

$$M_X(t) = E(e^{tX}) = \int_{-\infty}^{\infty} e^{tx} f(x)\,dx$$

When X is continuous.

As $M_X(t) = E(e^{tX})$

$$= E\left(1 + tX + \frac{t^2X^2}{2!} + \cdots + \frac{t^rX^r}{r!} + \cdots\right)$$

$$= 1 + t\,E(X) + \frac{t^2}{2}E(X^2) + \cdots + t^r\frac{E(X^r)}{r!} + \cdots$$

$$= 1 + t\,\mu_1' + \frac{t^2}{2!}\mu_2' + \cdots \frac{t^r}{r!}\mu_r' + \cdots$$

where

$$\mu_r' = E(X^r) = \int x^r f(x)\,dx \text{ for cts distribution.}$$

$$= \sum x^r p(x) \text{ for discrete distribution.}$$

is the rth moment of X about origin. Thus, the coefficient of $\frac{t^r}{r!}$ in $M_X(t)$ gives μ_r' (about origin)

Since $M_X(t)$ generates moments, it is known as moment generating function.

Atmiya University Rajkot

Scanned with CamScanner

Q. Find the moment-generating function of the r.v. whose probability density is given by.

$$f(x) = \begin{cases} e^{-x} & \text{for } x > 0 \\ 0 & \text{o/w.} \end{cases}$$

& find the expression for μ_r'.

Sol^n

$$M_x(t) = E(e^{tx})$$

$$= \int_0^\infty e^{tx} e^{-x} dx$$

$$= \int_0^\infty e^{-x(1-t)} dx$$

$$= \frac{1}{1-t} \quad \text{for } t < 1$$

And as $|t| < 1$

$$\Rightarrow \frac{1}{1-t} = 1 + t + t^2 + \cdots$$

$$= 1 + 1! \frac{t}{1!} + 2! \frac{t^2}{2!} + 3! \frac{t^3}{3!} + \cdots$$

&

hence $\mu_r' = r! \left\{ \text{coeff. of } \frac{t^r}{r!} \right\}$

Properties :-

① $M_{X+a}(t) = E\left[e^{(X+a)t}\right] = e^{at} E[e^{Xt}]$
$= e^{at} M_X(t)$

② $M_{bX}(t) = E(e^{bXt}) = M_X(bt)$

③

Atmiya University Rajkot

Scanned with CamScanner

Q. Find μ, μ_2' & σ^2 for the r.v. X that has the probability density.

$$f(x) = \begin{cases} \frac{x}{2} & \text{for } 0 < x < 2 \\ 0 & o/w. \end{cases}$$

Ans $\mu = \frac{4}{3}$, $\mu_2' = 2$ & $\sigma^2 = \frac{2}{9}$

Atmiya University Rajkot

Scanned with CamScanner

Statistical Methods

Unit-1: Statistics-Definiton and scope

- **Introduction, application and limitation of biostatistics**
- **Meaning od sample and population**
- **Types of data: Qualitative data- Nominal, Ordinal, Ranked; Quantitative data: Discrete and continuous**
- **Classification and tabulation of data**
- **Diagrammatic and graphic presentation- Introduction, significance of diagrams and graphs, Types of diagrams, Graphs of frequency distributions**

Statistics: It is the study of collection, analysis, interpretation, presentation and organization of data. In other words, it is a mathematical discipline to collect and summarize data.

Some real life examples of statistics are:

1. To find mean of marks obtained by each students in the class whose strength is 50. The average value here is the statistics of the marks obtained.
2. Suppose you need to find how many members are employed in a city. Since the city is populated with 15 lakh people, hence we will take a survey here for 1000 people (sample). Based on that, we will create the data, which is statistics.
3. **Urban Planning:**Statistics is regularly used by urban planners to decide how many apartments, shops, stores, etc. should be built in a certain area based on population growth patterns. For example, if an urban planner sees that population growth in a certain part of the city is increasing at an exponential rate compared to other parts of the city then they may decide to prioritize building new apartment complexes in that part of town compared to another area.
4. **Weather Forecasting:** Statistics is used heavily in the field of weather forecasting. In particular, probability is used by weather forecasters to assess how likely it is that there will be rain, snow, clouds, etc. on a given day in a certain area. Forecasters will regularly say things like “there is a 90% chance

Atmiya University Rajkot

of rain today between after 5PM" to indicate that there's a high likelihood of rain during certain hours.

5. **Investing:** Investors use statistics and probability to assess how likely it is that a certain investment will pay off. For example, a given investor might determine that there is a 5% chance that the stock of company A will increase 100x during the upcoming year. Based on this probability, they'll decide how much of their portfolio to invest in the stock.

Bio-statistics: It mostly concerned with carrying out biological experiments, particularly in medical science and agriculture so as to gather, summarize and analyze data from their experiments and interpret and infer from the results.

Limitations of statistics:

1. Statistics deals only with quantitative characteristics: Statistics deals only with the quantitative phenomenon. It won't deal with qualitative phenomenon like honesty, poverty, intelligence, beauty, etc. The statistical methods can be applied to qualitative characteristics only if they are expressed in quantitative terms by giving some marks or ranks.
2. Statistics doesn't deal with individual items: Statistics does not deal with single or individual object. It deals with aggregates of facts. It requires a series of figures for calculating averages and for analysis. The individual value has no recognition. It could not be taken in to consideration for any statistical analysis.
3. Statistical results are not perfectly accurate: The statistical theories will not give accurate results. The results would be only approximate value. We are not expecting hundred percent accuracy from statistics because the data collected for analysis may not be accurate.
4. Statistical Laws are not so perfect as the laws of science. Statistical results are true only on an average because the data are based on the theory of probability or estimation.
5. Statistical data should be uniform and homogeneous: The data used for statistical analysis must be uniform and homogeneous. Comparison is one of the important characteristics of statistics. Only uniform and homogeneous data can be compared. Heterogeneous or uncomparable data will direct to wrong and misleading conclusions.

Atmiya University Rajkot

6. Statistics may mislead to wrong conclusion in the absence of details.
7. Statistics does not reveal the entire story: Statistics only simplifies the complexity of data. It helps the analysis of certain quantitative facts. But the real story of the data may not be reflected through these facts.
8. Statistical studies involve Errors: Sampling technique is used in almost all statistical studies. Therefore, both sampling and non-sampling errors may creep in statistical studies. This will lead to wrong and misleading conclusions.
9. Statistics is likely to be misused: The most important limitation of statistics is that it must be used only by experts. Statistical methods are the most dangerous tools in the hands of inexpert.

Meaning of smaple and population:
Population: It is the entire group that you want to draw conclusions about.
Sample: It is the specific group that you will collect data from.The size of the sample is always less than the total size of the population.

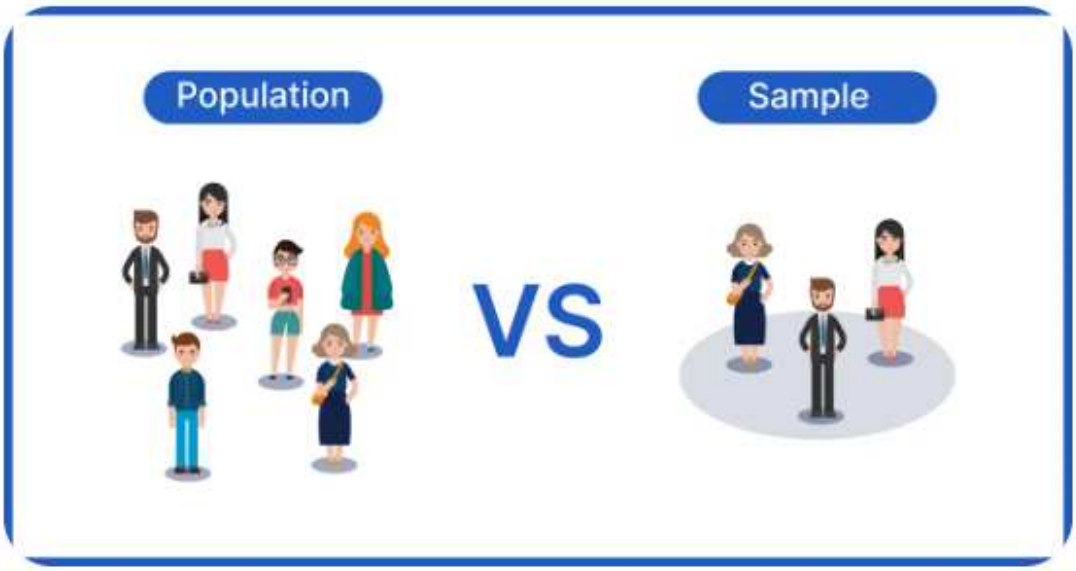

Generally, population refers to the people who live in a particular area at a specific time but in statistics, population refers to data on your study of interest. It can be a group of individuals, objects, events, organizations etc.

Atmiya University Rajkot

A sample is defined as a smaller and more manageable representation of larger group. A subset of a larger population that contains characteristics of that population. It is used when population size is too large.

It is unbiased subset of the population that best represent the whole data.

Types of Data:

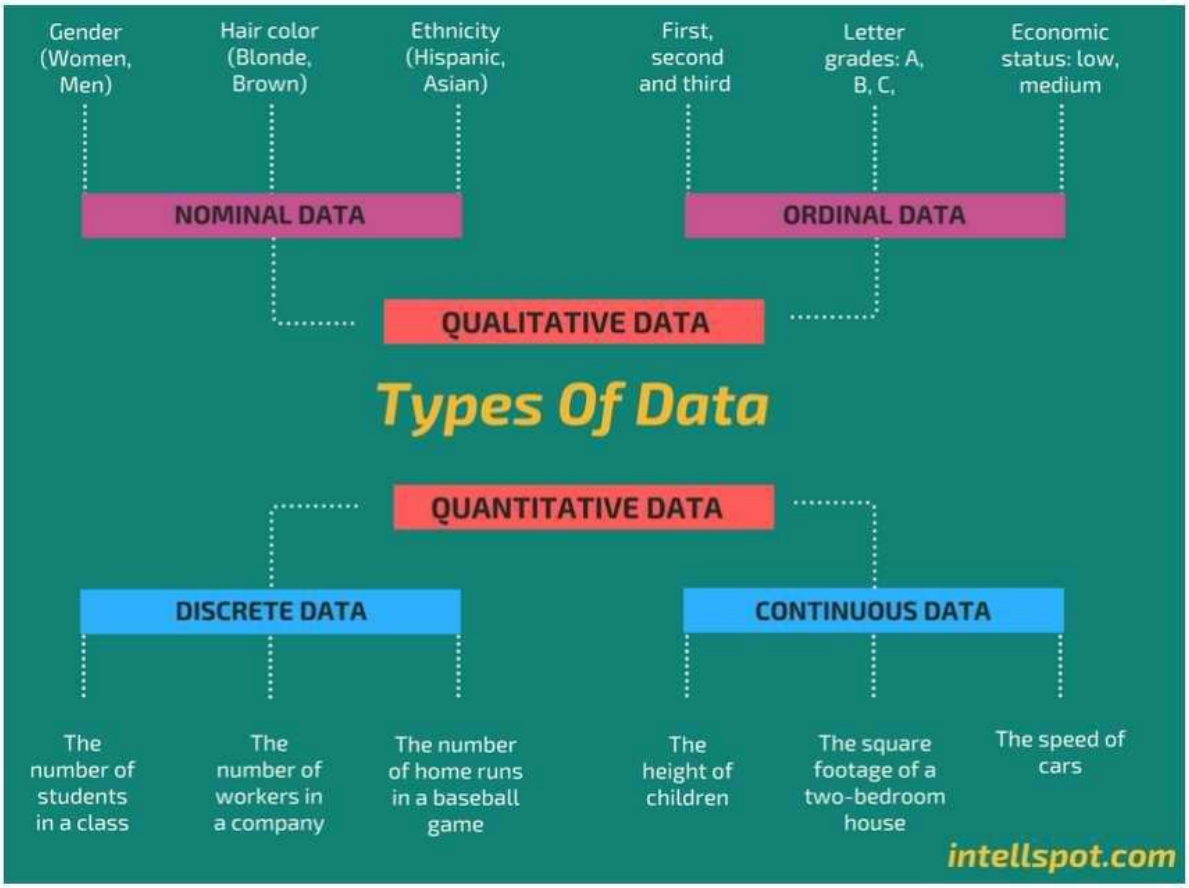

Quantitative data can be expressed as a number or can be quantified. Simply put, it can be measured by numerical variables.

Examples of quantitative data:

- Scores on tests and exams e.g. 85, 67, 90 and etc.
- The weight of a person or a subject.
- Your shoe size.

Atmiya University Rajkot

- The temperature in a room.

Qualitative data: Qualitative data can't be expressed as a number and can't be measured. Qualitative data consist of words, pictures, and symbols, not numbers. Qualitative data is also called categorical data because the information can be sorted by category, not by number.

Examples of qualitative data:

- Colors e.g. the color of the sea
- Your favorite holiday destination such as Hawaii, New Zealand and etc.
- Names as John, Patricia,…..
- Ethnicity such as American Indian, Asian, etc.

Nominal data

Nominal data is used just for labeling variables, without any type of quantitative value. The name 'nominal' comes from the Latin word "nomen" which means 'name'.

The nominal data just name a thing without applying it to order. Actually, the nominal data could just be called "labels."

Examples of Nominal Data:

- Gender (Women, Men)
- Hair color (Blonde, Brown, Brunette, Red, etc.)
- Marital status (Married, Single, Widowed)
- Ethnicity (Hispanic, Asian)

Ordinal data

Ordinal data shows where a number is in order. This is the crucial difference from nominal types of data.

Atmiya University Rajkot

Ordinal data is data which is placed into some kind of order by their position on a scale. Ordinal data may indicate superiority.

However, **you cannot do arithmetic with ordinal numbers** because they only show sequence.

Examples of Ordinal Data:

- The first, second and third person in a competition.
- Letter grades: A, B, C, and etc.
- When a company asks a customer to rate the sales experience on a scale of 1-10.
- Economic status: low, medium and high.

Discrete data

Discrete data is a count that involves only integers. The discrete values cannot be subdivided into parts.

For example, the number of children in a class is discrete data. You can count whole individuals. You can't count 1.5 kids.

To put in other words, discrete data can take only certain values. The data variables cannot be divided into smaller parts.

It has a limited number of possible values e.g. days of the month.

Examples of discrete data:

- The number of students in a class.
- The number of workers in a company.
- The number of home runs in a baseball game.
- The number of test questions you answered correctly

Continuous data

Atmiya University Rajkot

Continuous data is information that could be meaningfully divided into finer levels. It can be measured on a scale or continuum and can have almost any numeric value.

For example, you can measure your height at very precise scales — meters, centimeters, millimeters and etc.

You can record continuous data at so many different measurements – width, temperature, time, and etc. This is where the key difference from discrete types of data lies.

The continuous variables can take any value between two numbers. For example, between 50 and 72 inches, there are literally millions of possible heights: 52.04762 inches, 69.948376 inches and etc.

A good great rule for defining if a data is continuous or discrete is that if the point of measurement can be reduced in half and still make sense, the data is continuous.

Examples of continuous data:

- The amount of time required to complete a project.
- The height of children.
- The square footage of a two-bedroom house.
- The speed of cars.

Classification of data: It is the process of grouping the data, to represent it in a much meaningful way.

Classification:

1. Geographical
2. Chronological
3. Qualitative
4. Quantitative

Atmiya University Rajkot

Geographical classification: When data are classified with reference to geographical locations such as countries, states, cities, districts, etc., it is known as geographical classifications/spatial classification.

Example:

Place	Steel Industry
Orissa	18
Jharkhand	15
Chattisgarh	13
Punjab	10
Mumbai	8

Chronological classification: Where data are grouped according to time is known as a chronological classification. In such a classification, data are classified either in ascending or in decreasing order with reference to time such as years, quarters, months, weeks, etc. Also known as temporal classification.

Example:

Year	Tractor Sales (in unit)
2018	1,00,000
2019	1,15,456
2020	1,36,876
2021	1,52,477
2022	1,54,947

Atmiya University Rajkot

Qualitative and quantitative already discussed.

Tabulation of data: Tabulation is a systematic & logical presentation of numeric data in rows and columns to facilitate comparison and statistical analysis. It facilitates comparison by bringing related information close to each other and helps in further statistical analysis and interpretation.

In other words, the method of placing organised data into a tabular form is called as tabulation. It may be complex, double or simple depending upon the nature of categorisation.

5 Major Objectives Of Tabulation:

(1) To Simplify the Complex Data

It reduces the bulk of information, i.e. raw data in a simplified and meaningful form so that it could be easily by a common man in less time.

(2) To Bring Out Essential Features of the Data

It brings out the chief/main characteristics of data. It presents facts clearly and precisely without textual explanation.

(3) To Facilitate Comparison

Presentation of data in row & column is helpful in simultaneous detailed comparison on the basis of several parameters.

(4) To Facilitate Statistical Analysis

Tables serve as the best source of organised data for further statistical analysis.

The task of computing average, dispersion, correlation, etc. becomes easier if data is presented in the form of a table.

(5) Saving of Space

A table presents facts in a better way than the textual form. It saves space without sacrificing the quality and quantity of data.

Atmiya University
Rajkot

Questions on tabulation of data:

Q1: In 1990, out of a total of 2000 students in a college 1400 were from graduation and the rest for post – graduation. Out of 1400 graduate students 100 were girls. However in all there were 600 girls in the college. In 1995, number of graduates students increased to 1700 out of which 250 were girls, but the number of post – graduate fall to 500 of which only 50 were boys . In 2000, out of 800 girls 650 were from graduation , whereas the total number of graduates was 2200. The number of boys and girls in post-graduation classes was equal. Represent the above information in tabular form. Also calculate the percentage increase in the number of graduate students in 2000 as compared to 1990.

Q2: Out of total no, 2,807 women who were interviewed for employment in a textile factory 912, were from textile areas and the rest from non-textile areas. Amongst the married women who belonged to a textile areas, 347 were having some work experience and 173 did not have work experience, while for non-textile area the corresponding figures were 199 and 670, respectively. The total number of women having no experience was 1841 of whom 311 resided in textile area of the total number of women 1418 were unmarried and of these the number of women having experienced in the textile and non-textile area was 254 and 166, respectively. Tabulate the above information.

Q3: In a trip organized by a college there were 100 persons the average cost work out of Rs 1560 per head. There were 80 students each of whom paid Rs. 1600. Members of the teaching staff charged at a higher rate. The number of non-teaching staff was 6 (all males) and they were not charged. The number of ladies was 20% of the total persons and two were ladies staff members. Tabulate the above information.

Q4: Tabulate the following data:

Out of 356628 persons 247095 persons belonged to agricultural class. In the agricultural class 71049 persons were self-supporting, 31069 were earning dependents and the rest were non-earning. The number of non-earning and self-supporting persons in the non-agricultural class were 67335 and 33350, respectively. The others were earning dependents.

Atmiya University Rajkot

Q5: A city was divided into three areas viz. Northern, Southern and Central. There were 67,71,000 houses of which 17,61,000 were in the central area. Of the house in the Southern area 40,64,000 were occupied and 4,500 were under construction. In the Northern area 40,000 houses were unoccupied and 5,000 were under construction out of the total of 6,16,000 houses. The total houses in the city that are under construction are 62,000 and those unoccupied are 4,49,000. Present the above data in a table.

Atmiya University
Rajkot

Page

Unit 1 :- Intro. to group

- Binary operation : def^n & prop.
- Def^n and example of group
- Elementary pro. of group
- Finite groups

★ Binary operation :-

- Let. Non empty set A, a mapping from $A \times A \longrightarrow A$ is called Binary operation on A. It is a rule which asign to each eliment (a.b) of the Product set $A \times A$, a unique ele^t c of A.

Notations :- $\circ, *, +, \oplus, \Delta, \nabla$ etc.

Ex :- 1. The binary operation $*$ on z is defined as,
$m * n = m - n$ for $m, n \in Z$

2. '+' is b.o. on a set of Natural Numbers, $N = \{1, 2, 3, \ldots\}$ since $a+b \in N \ \forall \ a, b \in N$

3. Substraction '−' is not a binary operation on N. since $2 \in N$, $5 \in N$ but $2-5 = -3 \notin N$

★ Properties of Binary operation :

Ex :- For the binary operation ∇ on N,
$m \nabla n = m$; $m, n \in N$
Here, $3 \nabla 12 = 3$
$12 \nabla 3 = 12$ i.e. $3 \nabla 12 \neq 12 \nabla 3$
and another operation $m \cdot n = \min\{m, n\}$
Here, $2 \cdot 7 = 2$ & $7 \cdot 2 = 2$
i.e. $2 \cdot 7 = 7 \cdot 2$

→ (1) Commutative Property : A non-empty set A is said to satisfy commutative property w.r.t. B.O. '$*$' is $a * b = b * a$ for $\forall \ a, b \in A$

Atmiya University Rajkot

Ex: 1. set of integers satisfies commutative w.r.t

2. set of all real square matrices of order n satisfies the commutivity w.r.t matric addition but not w.r.t. matrix multiplication.

→ (2) Associative Property : A non-empty set S is said to satisfy associative pro. w.r.t. B.O

$a * (b * c) = (a * b) * c$; $\forall a, b, c \in S$

Ex: 1. $Z = \{\ldots, -3, -2, -1, 0, 1, 2, 3, \ldots\}$ satisfies associativity w.r.t. addition as well multiplication. since, $a + (b + c) = (a + b) + c$

& $a(bc) = (ab)c$; $\forall a, b$

Ex: set M of all $m \times n$ matrices satisfy associativity w matrix addition as well as multiplication. (Provided multiplication is valid)

→ (3) Identity ele^t :- let, S be non-empty set and '*' is a B.O. on S, then if $\exists$ an element 'e' $\ni$ $a * e = a = e * a$ $\forall a \in S$, then 'e' is called identity of the set S w.r.t '*'.

Ex: 1. set Z, Q, R and C, B. operation '+'

↳ identity ele^t → 0

and B. operation '×' → iden. ele^t → 1

→ (4) Inverse element : let '*' be the B.O defined on a non-empty set S and let 'e' be identity of S w.r.t '*'. $\forall a \in S$, let 'b' be such that $a * b = b * a = e$ then b is ----

Atmiya University Rajkot

Ex: 1. inverse of any number 'a' (real or complex) w.r.t addition is '$-a$'.
because $a + (-a) = 0 = (-a) + a$
Ily, for any non-zero number 'a' (real/complex), the inverse w.r.t multiplication is $\frac{1}{a}$.
$\because a \cdot \frac{1}{a} = \frac{1}{a} \cdot a = 1$

2. In the set of M of 2x2 Matrices over real number, the inverse of $\begin{bmatrix} 5 & -7 \\ 2 & 0 \end{bmatrix}$ is $\begin{bmatrix} -5 & 7 \\ -2 & 0 \end{bmatrix}$ w.r.t matrix addition.

Example :-
1. Define the B.O. $*$ on Z as $a * b = \max\{a, b\}$ examine the b.o. $*$ for commutativity, associativity and identity elet.

Soln Since $a * b = \max\{a, b\} = \max\{b, a\} = b * a$
the B.O. is commu.
Also, $a, b, c \in Z$, $(a * b) * c = [\max\{a, b\}] * c$
$= \max\{a, b, c\}$
$= a * \max\{b, c\}$
$\Longrightarrow (a * b) * c = a * (b * c)$
i.e. It is Associative.
If 'e' is an identity elet, then
$a * e = \max\{a, e\} = a$
That is, $e \leq a$ for $\forall a \in Z$, which is not possible.

2. Q : $a * b = 1 + ab$
we can see it is commutative.
Now, $(a * b) * c = (1 + ab) * c$
$= 1 + abc$ $(1 + ab)c + 1$
$= c + abc + 1$

Amiya University Rajkot

$a*(b*c) = a*(1+bc)$
$= 1+(a)(1+bc)$
$= 1+a+abc$

i.e. $a*(b*c) \neq (a*b)*c$

That means it is not Associative.

Q. 2 : $a*b = a+b-ab$

Clearly $a*b = b*a$,

$\Rightarrow$ It satisfies Ass. Commutivity.

Now. $(a*b)*c = (a+b-ab)*c$
$= (a+b-ab)+c - (a+b-ab).c$
$= a+b+c-ab-ac-bc+abc$
$= a+b+c-ac-bc-ab+ak$
$= \cancel{a+b+c-c(a+b)}$

$a*(b*c) = (a)*(b+c-bc)$
$= a+b+c-bc - a(b+c-bc)$
$= a+b+c-bc-ab-ac-abc$

i.e. $(a*b)*c = a*(b*c)$

$\Rightarrow$ it satisfies Associativity.

★ Group :

A non-empty set G is said to be group w.r.t an operation '*', if the following properties are satisfied.

i) closure property: The set G is closed w.r.t '*' ie, $a*b \in G \quad \forall a,b \in G$

Aditya University Rajkot

(ii) Associative Property:

$a * b = a + b + ab$

$(a * b) * c = (a * b) * c \; \forall \; a, b, c \in G$

(iii) existence of identity: There exists an element $e \in G$ s.t

$$a * e = a = e * a \quad \forall \; a \in G$$

The element $e \in G$ is called the identity of G

(iv) Existence of inverse, for every $a \in G$, $\exists \; b \in G$ s.t

$$a * b = e = b * a$$

This element b i called inverse of a & is denoted by $b = a^{-1}$

Note :- Expression - $(G, *)$ if a is group w.r.t '$*$' operation

Ex The set of integers is a group under the binary operation - addition
lly, the set of even integers, the set of rational numbers Q, the set of real numbers R and the set of complex no C - all are group under the B.O addition

Here, e is '0' additive inverse of a is '$-a$'

Atmiya University Rajkot

Abelian group (commutative group).

A group $(G, *)$ is said to be abelian or commutative if it satisfies

$$a * b = b * a \quad \forall\, a, b \in G.$$

Finite & Infinite group :- If a group G consists of a finite number of elements, then it is called a finite group, o/w it is called an infinite group.

Order of group :- The no of element in G

Finite group is called the order of the group. An infinite group is said to be of infinite order. Notation is $O(G)$.

Ex:- 1). show that the set Z of all integers is an abelian group w.r.t. addition.

Sol^n we have $Z = \{\ldots, -3, -2, -1, 0, 1, 2, 3, \ldots\}$

(i) Closure Property:

Since sum of 2 integers is also an integer.

i.e. $a+b \in Z \;\forall\, a, b \in Z$

i.e. Z is closed w.r.t. addition.

(ii) Associativity :- It obeys associativity

i.e. $(a+b)+c = (a+b)+c \quad \forall\, a, b, c \in Z$

(iii) Existance of identity : the number $0 \in Z$ & $a+0 = a = 0+a \quad \forall\, a \in Z$

thus, 0 is identity for $(Z, +)$.

Amiya University Rajkot

(iv) Existence of inverse : for each $a \in \mathbb{Z}$, $\exists$ unique element $-a \in \mathbb{Z}$ s.t.

$$a+(-a) = 0 = (-a)+a$$

Thus $-a$ is ..

(v) Commutativity :

The set of integers satisfy the commutative property i.e. $a+b = b+a \quad \forall a, b \in \mathbb{Z}$

Thus, The set $\mathbb{Z}$ of all integers is an abelian group. Also it contains infinite number of elt. It is an infinite abelian group.

Ex :- 2 Set Q_0, Q_+, R_+, R_0 & C_0 are groups under the B.O '$*$' multiplication. The 'e' is 1 & the inverse of a is $1/a$ for all these group.

Ex :- 3 Let $n \in \mathbb{Z}$, The set of integers mod n, $\mathbb{Z}/n =$ $\mathbb{Z}_n = \{[0], [1], \ldots, [n-1]\}$ is a group under the B.O. '$+_n$' the addition modulo n.

Here, e is $[0]$ & inverse if $[i]$ is $[n-i]$

Ex :- 4 For prime integer $p \in \mathbb{N}$ the set $G = \{[1], [2], \ldots, [p-1]\}$ becomes a group under the B.O. - the multiplication modulo p.

Ex :- 5 Show that the set of all n, n^{th} roots of unity forms a finite abelian group of order n w.r.t. multiplication.

Sol^n We know that n, n^{th} roots of unity are given by,

Atmiya University Rajkot

$(1)^{\frac{1}{n}} = (\cos 2k\pi + i \sin 2k\pi)^{\frac{1}{n}}$

where, $k = 0, 1, 2, \ldots, n-1$

$= \left(\cos \frac{2k\pi}{n} + i \sin \frac{2k\pi}{n}\right)$

Let, $r = \cos \frac{2\pi}{n} + i \sin \frac{2\pi}{n}$, then roots are $1, r, r^2, \ldots, r^{n-1}$

$\left[\because r^2 = \cos \frac{4\pi}{n} + i \sin \frac{4\pi}{n}\right]$

Let, $G = \{1, r, r^2, \ldots, r^{n-1}\}$ then G is the set of all n, n^{th} roots of unity to prove G is group :-

(i) Closure Property :

Let $a, b \in G$, be any two elt then

$a^n = 1$, $b^n = 1$ [$\because \forall$ elt of G is n^{th} root of 1]

Now, $(ab)^n = a^n b^n = 1 \cdot 1 = 1 \Rightarrow ab \in G$

$\Rightarrow G$ is closed w.r.t. multiplication.

(ii) Associative property :

Since the elt of ~~grot~~ G are complex numbers & the multiplication of complex numbers is associative, G satisfies associative property w.r.t. multiplication.

(iii) Existence of identity :

we have $1 \cdot a = a = a \cdot 1 \ \forall a \in G$

$\Rightarrow 1$ is identity of G w.r.t. multiplication

(iv) Existence of Inverse :

Let $r^m \in G$ be any elt where $0 \le m \le n-1$ then r^{n-m} is inverse of r^m because

$r^m \cdot r^{n-m} = r^n = 1$

& $r^{n-m} \cdot r^m = r^n = 1$

Atmiya University Rajkot

⇒ every elt of G possesses its inverse in G.

(v) commutative property :- since multiplication of complex numbers is commutative, therefore G satisfies commutative property.
Hence, G is a finite abelian group of order n w.r.t. multiplication.

* Addition modulo m :- It is written as $(a +_m b)$, where a & b are any integers, m is a fixed positive integer. we define, $a +_m b = r$, $0 \le r \le m-1$, where r is the least non-negative remainder when a+b is divided by m.

eg :- $5 +_4 4 = 1$, $6 +_6 6 = 0$; $7 +_8 6 = 0$

Ex :- prove that the set $Z_6 = \{0, 1, 2, 3, 4, 5\}$ is a finite abelian group of order 6 w.r.t. addition modulo 6.

Sol^n since the given set is finite, let us form the composition table to check the properties of group :-

$+_6$	0	1	2	3	4	5
0	0	1	2	3	4	5
1	1	2	3	4	5	0
2	2	3	4	5	0	1
3	3	4	5	0	1	2
4	4	5	0	1	2	3
5	5	0	1	2	3	4

(i) closure property :- All the entries in the above table are elt of Z_6
∴ Z_6 is closed

Atmiya University Rajkot

(ii) Associative Property : let $a, b, c \in Z_6$ then

$(a +_6 b) +_6 c$ = least non-negative remainder when $(a+b)+c$ is divided by 6

$= \text{least} \ldots \quad a+b+c \ldots$

$= \text{least} \ldots \quad a+(b+c) \ldots$

$= a +_6 (b +_6 c)$

Hence, Z_6 is Associative ----

(iv) Existance of inverse : from the composition table we see that.

$0 +_6 0 = 0$, $1 +_6 5 = 0$, $2 +_6 4 = 0$, $3 +_6 3 = 0$,

$4 +_6 2 = 0$, $5 +_6 1 = 0$.

Thus, we get the inverse of 0, 1, 2, 3, 4, 5 are 0, 5, 4, 3, 2, 1 resp.

(v) Commutative Property : from the above table corresponding rows and columns are identical

$\therefore$ Z_6 satisfy commutativity.

Also Z_6 has 6 elet.

Hence, Z_6 is a finite abelian group of order 6.

Remark : $Z_m = \{0, 1, 2, \ldots m-1\}$ is an abelian group of order M w.r.t. addition modulo M. It is known as Additive group of Integers modulo m.

★ Multiplication Modulo 'M' :-

- Let a & b be two integers 'm' be a fixed positive integer then we have

$$a \times_m b = s, \quad 0 \le s \le m-1$$

where 's' is the least non-negative remainder when $a \times b$ is divided by m.

Amiya University Rajkot

Ex :- Prove that the set $G = \{1, 2, 3, 4, 5, 6\}$ is a finite abelian group of order 6 with respect to m. m. 7.

Sol^n Let us form the composition table :-

$\times_6$	1	2	3	4	5	6
1	1	2	3	4	5	6
2	2	4	6	1	3	5
3	3	6	2	5	1	4
4	4	1	5	2	6	3
5	5	3	1	6	4	2
6	6	5	4	3	2	1

(i) closure property : From the composition table we observe that all the entries are elet of G.
∴ G is closed w.r.t. ---

(ii) Associative property :- Let $a, b, c \in G$ then
$a \times_7 (b \times_7 c)$ = least non-negative remainder when $a \times (b \times c)$ is divided by 7.
= least non-negative remainder when $(a \times b) \times c$ is divided by 7.
$= (a \times_7 b) \times_7 c$

This, G satisfy associative ---

(iii) Existence of identity : we have $1 \in G$ is such that,
$1 \times_7 a = a = a \times_7 1$; $\forall a \in G$
Thus, 1 is identity elet of G.

(iv) Existence of inverse :- From the table we see that --- $1 \times_7 1 = 1$, ---, $6 \times_7 6 = 1$
Thus, inverse of 1, 2, 3, 4, 5, 6 are 1, 4, 5, 2, 3, 6 respe. This inverse of every elet exists in G.

Atmiya University Rajkot

(v) Commutative property : From the table, we see that the corresponding rows & columns are identical, so G satisfy the commutative property w.r.t. $\times_7$, since G has 6 elt. Thus, G is a finite abelian group of order 6, w.r.t. multiplication modulo 7.

Remark : The set $G = \{1, 2, 3, \ldots, p-1\}$, p being prime is always a finite abelian group of order p-1, composition being multiplication modulo p.

Ex :- $G = \{1, 2, 3, 4, 5\}$, multiplication modulo 6.

→ In the set G, we have $2 \times_6 3 = 0$ & $0 \notin G$, so closure property does not hold good in G, therefore, G is not a group.

Ex :- The set $G = \{0, 1, 2, 3, 4, 5\}$ isn't a group w.r.t. multiplication 5.

Sol^n Since $0 \in G$, has not a inverse in G, so G is not a group.

* Exercise :-

1. Prove that the set $\{1, 5, 7, 11\}$ is a group under multiplication modulo 12.
2. Which of the following sets are group under multiplication modulo 11.
   (i) $\{1, 3, 5, 7, 8\}$ (ii) $\{1, 8\}$ (iii) $\{1, 10\}$ ✓
3. Is the set $\{1, 2, 3, 4, 5, 6\}$ a group under the addition modulo 7 ?

   ↳ 0 is identity for addition
   But Here $0 \notin \{1, 2, 3, 4, 5, 6\}$
   i.e. $\{1, 2, 3, 4, 5, 6\}$ is not a group

Atmiya University

$a * b = e = b * a$

$a * c = e = c * a$

Date
Page

Thrm:- Let, G be a group then
(i) The identity elet of G is unique.
(ii) every elet has unique inverse.
(iii)

proof:- Let, if possible 'G' has two identities
(i) say e_1 & e_2, the taking e_1 as identity and e_2 as elet then.

$$e_1 * e_2 = e_2 = e_2 * e_1 \longrightarrow (1)$$

Now, let, e_2 as identity & e_1 as elet tha

$$e_2 * e_1 = e_1 = e_1 * e_2 \longrightarrow (2)$$

From (1) & (2), we get, $e_1 e_2 = e_2 e_1 = e_1 = e_1 e_2$

$$\Rightarrow e_1 = e_2$$

Hence, identity is unique.

(ii) Let, e be an identity.
Consider a as any elet of G. and it has two b & c inverse if possible.
Also, so

$$ab = e = ba$$
$$ac = e = ca$$

Now, $b = be = b(ac) = (ba)c$ [$\because$ Asso.]
$= ec = c$ [$\because ba = e$]

$$\Rightarrow b = c$$

Hence, every elet has unique inverse.

Thrm:- Cancellation Law holds in a group. If a, b, c are any elet of G, then
(i) $ab = ac \Rightarrow b = c$ (left C. L.)
(ii) $ba = ca \Rightarrow b = c$ (Right C. L.)

Atmiya University Rajkot

Proof:- (i) $ab = ac$ (given)

pre multiplication by a^{-1},

$$a^{-1}(ab) = a^{-1}(ac)$$
$$(a^{-1}a)b = (a^{-1}a)c \quad (\because \text{Asso.})$$
$$eb = ec$$
$$b = c$$

(ii) $ba = ca$

Post multiplication by a^{-1},

$$(ba)a^{-1} = (ca)a^{-1}$$
$$b(aa^{-1}) = c(aa^{-1}) \quad (\because \text{Asso.})$$
$$be = ce$$
$$b = c$$

Thm :- (Inverse of Inverse & Reversal law of product) let G be group & $a, b, c \in G$. P.T.

(i) $(a^{-1})^{-1} = a$ (ii) $(ab)^{-1} = b^{-1}a^{-1}$

Proof let, e is the identity of G; we know that

(i) $a \cdot a^{-1} = e$, pre-multiplication by $(a^{-1})^{-1}$, we get,

$$(a^{-1})^{-1} \cdot (a^{-1}a) = (a^{-1})^{-1}e$$
$$\therefore ((a^{-1})^{-1}a^{-1}) \cdot a = (a^{-1})^{-1}$$
$$\therefore ea = (a^{-1})^{-1}$$
$$\therefore a = (a^{-1})^{-1}$$

(ii) Given $a, b \in G$. If a^{-1} & b^{-1} are the inverse of a & b resp, and e is the identity of G then,

$$aa^{-1} = e = a^{-1}a \quad \& \quad bb^{-1} = e = b^{-1}b$$

$\rightarrow$ Consider,

$$(ab)(b^{-1}a^{-1}) = a(bb^{-1})a^{-1}$$
$$= aea^{-1} \quad \because aa^{-1} = e$$

Atmiya University Rajkot

$R.H.S. = (b^{-1}a^{-1})(ab)$

$= b^{-1}(a^{-1}a)b$

$= b^{-1}eb$

$= b^{-1}b = e$

i.e. $(ab)(b^{-1}a^{-1}) = e = (b^{-1}a^{-1})(ab)$

$\Rightarrow (ab)^{-1} = b^{-1}a^{-1}$

Thrm: If a & b are any two elt of G, then the equations $ax=b$ & $ya=b$ have a unique solution.

Sol^n $ax = b \longrightarrow (1)$ $\qquad ya = b \longrightarrow (2)$

$ax = b$, pre-multiplication by a^{-1}

$a^{-1}(ax) = a^{-1}b$

$(a^{-1}a)x = a^{-1}b$

$ex = a^{-1}b$

$x = a^{-1}b$

$ya = b$, post---- a^{-1}

$(ya)(a^{-1}) = ba^{-1}$

$y(e) = ba^{-1}$

$y = ba^{-1}$

→ If posible. Now let x_1 & x_2 is two diff. sol^n of $ax=b$,

i.e. $ax_1 = b$ & $ax_2 = b$

$ax_1 = ax_2$

$x_1 = x_2$ (left C.L.)

unique---

→ If possible y_1 & y_2 is two diff. sol^n of $ya=b$,

i.e. $y_1a = b$ & $y_2a = b$

$\Rightarrow y_1a = y_2a$

$y_1 = y_2$ (Right C.L.)

Hence.....

Atmiya University Rajkot

Thrm: P.t. if G is an abelian group then for all $a, b \in G$ and for all integers n, we have $(ab)^n = a^n b^n$

Proof: To prove $(ab)^n = a^n b^n \ \forall a, b \in G$ & $n \in \mathbb{Z}$

→ case 1 : $n = 0$ then

$$(ab)^0 = a^0 b^0 = e$$

$\Rightarrow$ result holds for $n = 0$

→ case 2 : n is the +ve integer, we shall prove the result by principle of M.I.

we have, for $n = 1$,

$$(ab)^1 = a^1 b^1$$

$\Rightarrow$ result holds for $n = 1$

Now, suppose the result is true for k i.e. $(ab)^k = a^k b^k$

To Prove for $n = k+1$, i.e. $(ab)^{k+1} = a^{k+1} b^{k+1}$

consider,

$$\begin{aligned}(ab)^{k+1} &= (ab)^k (ab) \\ &= a^k b^k b a \\ &= a^k b^{k+1} a \quad (\because \text{Associative}) \\ &= a^k \cdot a \, b^{k+1} \\ &= a^{k+1} b^{k+1}\end{aligned}$$

$\Rightarrow$ Result holds for all +ve integers.

→ Case 3 : If n is a negative integer, then suppose $n = -m$ where m is a +ve

we have,

$$\begin{aligned}(ab)^n &= (ab)^{-m} \\ &= [(ab)^m]^{-1} \\ &= [a^m b^m]^{-1} \\ &= b^{-m} \cdot a^{-m} = a^{-m} \cdot b^{-m} = a^n b^n\end{aligned}$$

Aditya University Rajkot

Ex: If G be an abelian group, then show that $ab^n = b^n a \quad \forall n \in N, a, b \in N$
(solve by Pri. Maths. indu)

* Order of an elet. in a group:-
- Let, G be a group. For $a \in G$, if there exists a least Positive integer m s.t. $a^m = e$, the m is called order of a, we write $o(a) = m$.

Ex:-1 Let, $G = \{1, 2, 3, 4, 5, 6\}$. Find the order of each elet of G under composition multi. modulo 7.

ANS $1 \to 7$ Correction
$2 \to 3$, $5 \to 6$
$3 \to 6$, $6 \to 2$
$4 \to 3$

2. $G = \{0, 1, 2, 3, 4, 5, 6, 7\}$ --- Addition modulo 8.

ANS: $0 \to 1$, $1 \to 8$, $2 \to 4$
$3 \to 8$, $4 \to 2$, $5 \to 8$
$6 \to 4$, $7 \to 8$

Thrm: The order of every elet of a finite group is finite and can'n't exceed the order of group.
↳ no more than

Proof: (i) Let 'G' be a finite group & 'a' be any elet of G, then by closure property a, a^2, a^3, a^4 ---- are all elet of 'G'. But since the no. of elet are finite, so all these elet are not distinct.
There must exist two distinct positive integers 'r' and 's' where

Amiya University Rajkot

$r > s$ s.t.

$a^r = a^s$

$a^{r-s} = a^0 = e$

$a^k = e$ where $r - s = k$

Thus $\exists$ positive integer k s.t. $a^k = e$

$\Rightarrow o(a) \leq k$, so that $o(a)$ is finite

(ii) Let 'n' be the order of 'a'; then $a, a^2, a^3 \ldots a^n$ must be distinct elet of G.

for if, $a^i = a^j$ for some $1 \leq i, j \leq n$

$\Rightarrow a^{i-j} = a^0 = e$

$\Rightarrow o(a) \leq i - j < n$

which is contra; $\therefore$ G contains elet 'n' elet, namely $a, a^2, \ldots, a^n$.

$\Rightarrow o(G) \geq n$

$\Rightarrow o(G) \geq o(a)$

$\Rightarrow$ order of elet can't exceed $o(G)$

<u>Thrm</u>: Let G be a group and 'a' be an elet of G of order n, then $a^m = e$ iff n divides m

<u>Proof</u>: Given that $o(a) = n$. Let m be +ve integer s.t. n divides 'm' so that $\exists$ a +ve integer q s.t. $m = nq$

$$a^m = a^{nq} = (a^n)^q$$
$$= e^q = e$$

Conversely $\Rightarrow$ Let $a^m = e$, Now, since m, n are integers so by division algorithm $\exists$ integer 'q' & 'r' s.t.

$m = nq + r$ where $0 \leq r < n$ $\rightarrow$ (1)

Now, $a^m = a^{nq+r} = a^{nq} \cdot a^r = (a^n)^q \cdot a^r$

Atmiya University Rajkot

Remark :- $(a \in G)^{\text{Power}}$ = identity; iff $o(a \in G)$ / Power

But $a^m = e$, so we get $a^r = e$ where $0 \le r < n$

since n is the order of a, so only possible value of r is zero.

Using, $r = 0$ in ①, we get $m = nq$

$\Rightarrow$ n divides m.

Thm :- Prove that, In a group G

(i) $o(a) = o(a^{-1})$; $\forall a \in G$

(ii) $o(a) = o(x^{-1}ax)$; $\forall a, x \in G$

(iii) $o(ab) = o(ba)$ $\forall a, b \in G$

Proof :- (i) Let $o(a) = m$ & $o(a^{-1}) = n$, we show show that $m = n$

$\Rightarrow o(a) = m \Rightarrow a^m = e \Rightarrow (a^m)^{-1} = e^{-1} = e$

$\Rightarrow (a^{-1})^m = e$

$\Rightarrow o(a^{-1}) \le m$

$\Rightarrow n \le m \longrightarrow$ ①

again, $o(a^{-1}) = n \Rightarrow (a^{-1})^n = e \Rightarrow (a^n)^{-1} = e$

$\Rightarrow a^n = e^{-1} = e$

$\Rightarrow o(a) \le n$

$\Rightarrow m \le n \longrightarrow$ ②

From ① & ②, $m = n$

(ii) Let $o(a) = m$ & $o(x^{-1}ax) = n$, we show prove that $m = n$

Consider, $(x^{-1}ax)^m = x^{-1}a^m x = x^{-1}ex = e$

$\Rightarrow o(x^{-1}ax) \le m$

$\Rightarrow n \le m \longrightarrow$ ①

again $o(x^{-1}ax) = n$ $\Rightarrow (x^{-1}ax)^n = e$

$\Rightarrow x^{-1}a \cdot x \cdot x^{-1}ax \cdots x^{-1}ax = e$

$\Rightarrow x^{-1}a \cdot a \cdot a \cdots a \cdot x = e$

$\Rightarrow x^{-1}a^n x = e$

$\Rightarrow x x^{-1} a^n x x^{-1} = x e x^{-1}$

$\Rightarrow e a^n e = e$

$\Rightarrow a^n = e \Rightarrow o(a) \le n \Rightarrow m \le n \longrightarrow$ ②

From ① & ②, $m = n$

Atmiya University Rajkot

(iii) By above part $o[a^{-1}(ab)a] = o(ab)$

$o[(a^{-1}a)(ba)] = o(ab)$

$o(ba) = o(ab)$

Thrm: The order of any integral power of an elet is less than or equal to the order of the elet.

Proof Let G be a group, let $a \in G$ and $k \in \mathbb{Z}$, $a^k \in G$ be any integral power of a then we have to prove $o(a^k) \leq o(a)$.

Let $o(a) = m$

$\Rightarrow a^m = e \Rightarrow (a^m)^k = e^k = e$

$\Rightarrow (a^k)^m = e$

$\Rightarrow o(a^k) \leq m \quad [\because a^m = e \Rightarrow o(a) \leq m]$

i.e. $o(a^k) \leq o(a)$

Remark: In the next thrm we shall find when exactly is the order of any integral power of an elet.

Thrm: Let G be a group & $a \in G$ is a order of n. Then for any integer k, prove that $o(a^k) = \frac{n}{(n,k)}$ where (n,k) denotes the gcd of n & k.

proof

Let $(n,k) = d$ i.e. gcd of n and k be d, then there exist two integers p and q s.t.

$n = pd$ & $k = qd$ and $(p,q) = 1$

i.e. p & q are coprime, then $n/d = p$.

we have to prove $o(a^k) = \frac{n}{(n,k)} = \frac{n}{d} = p$

Let us suppose, $o(a^k) = l$

Atmiya University Rajkot

Gallian book, Page No : 45

Ex:⟹ The set of all 2x2 Matrices with determinant '1' with entries Q, IR, C, or Z_p (p → prime No.) is a non-Abelian group under matrix Multi. This group is called the special linear group of 2x2 matrices over Q, IR, C or Z_p respectively

Notation : SL(2, F)

Here, 2 → Matrix order 2x2

F → Q / IR / C / Z_p

Page No : 44

Ex:- U(n) = set of all +ve integers less than 'n' & relatively prime to n.

U(n) is a group under Multiplication modulo n.

→ m = 10

U(10) = {1, 3, 7, 9}

⟹ Cayley table :-

Mod_{10}	1	3	7	9
1	1	3	7	9
3	3	9	1	7
7	7	1	9	3
9	9	7	3	1

Check : identity, inverse

Page No : 43

★ The determinant of the 2x2 matrix $\begin{bmatrix} a & b \\ c & d \end{bmatrix}$ is the no. ad - bc. If A is the 2x2 Matrix, det A denotes the determinant of A.

The set,

$$GL(2, IR) = \left\{ \begin{bmatrix} a & b \\ c & d \end{bmatrix} / a, b, c, d \in IR, ad - bc \neq 0 \right\}$$

of 2x2 matrices with real entries & non-zero determinant is a non-Abelian group under operation (Multiplication)

Atmiya University Rajkot

Ex:- $\begin{bmatrix} a_1 & b_1 \\ c_1 & d_1 \end{bmatrix} \begin{bmatrix} a_2 & b_2 \\ c_2 & d_2 \end{bmatrix} = \begin{bmatrix} a_1a_2+b_1c_2 & a_1b_2+b_1d_2 \\ a_2c_1+d_1c_2 & c_1b_2+d_1d_2 \end{bmatrix}$

check the properties of group.

Soln (i) Closure - If $A, B \in GL(2,\mathbb{R})$

$\rightarrow \det(A) \neq 0$; $\det(B) \neq 0$

$\Rightarrow \det(AB) \neq 0$

$\Rightarrow AB \in GL(2,\mathbb{R})$

Hence, closure property holds.

(ii) Matrix are associative by Nature.

(iii) $\begin{bmatrix} 1 & 0 \\ 0 & 1 \end{bmatrix}$ is the identity of $GL(2,\mathbb{R})$.

(iv) Here, for every Matrix $\in GL(2,\mathbb{R})$ Inverse Matrix exist.

$\because \det(A) \neq 0$; $\forall A \in GL(2,\mathbb{R})$

if $A = \begin{bmatrix} a & b \\ c & d \end{bmatrix}$

then $A^{-1} = \frac{1}{ad-bc}\begin{bmatrix} d & -b \\ -c & a \end{bmatrix}$

Thus, $GL(2,\mathbb{R})$ is a group.

Ex:- $O(D_4) = 8$

$= \{R_0, R_{90}, R_{180}, R_{270}, H, V, D, D'\}$

	R_0	R_{90}	R_{180}	R_{270}	H	V	D	D'
R_0	R_0	R_{90}	R_{180}	R_{270}	H	V	D	D'
R_{90}	R_{90}	R_{180}	R_{270}	R_0	D'	D	H	V
R_{180}	R_{180}	R_{270}	R_0	R_{90}	V	H	D'	D
R_{270}	R_{270}	R_0	R_{90}	R_{180}	D	D'	V	H
H	H	D	V	D'	R_0	R_{180}	R_{90}	R_{270}
V	V	D'	H	D	R_{180}	R_0	R_{270}	R_{90}
D	D	V	D'	H	R_{270}	R_{90}	R_0	R_{180}
D'	D'	H	D	V	R_{90}	R_{270}	R_{180}	R_0

Aamiya University Rajkot

$D_n \rightarrow$ Dihedral group of order $2n$

(i) Closure $\rightarrow$ $A, B \in D_4 \Rightarrow AB \in D_4$

(ii) Associative property holds.

(iii) $R_0 A = A = A R_0 \Longrightarrow R_0$ identity

(iv) $AB = BA = R_0$

inverse of $R_0 \rightarrow R_0$

$R_{90} \rightarrow R_{270} \rightarrow R_{90}$

$R_{180} \rightarrow R_{180}$

$H \rightarrow H$, $V \rightarrow V$

$D \rightarrow D$, $D' \rightarrow D'$

(v) $HD \neq DH$ i.e. Non-abelian group.

MODULE-II

TYPES OF DATA

Here we are study mainly 3-types of data (observations)

1: Individual data: There are observations where frequencies are not given

2 discrete data: it is a series of observations with frequencies.

3. Continuous data: It is a series of observations with classes and frequencies.

MEASURE OF CENTRAL TENDENCY

It is a single value that attempts to describe a set of data by identifying the central position with in that set of data. It is also known as summary statistics. The data is summarized in the form of tables and frequency distributions. In order to bring the characteristics of data, these tables and frequencies need to summarized further.

- There are five types of measure of central tendency or averages:

1. ARITHMETIC MEAN
2. MEDIAN
3. MODE
4. GEOMETRIC MEAN
5. HARMONIC MEAN

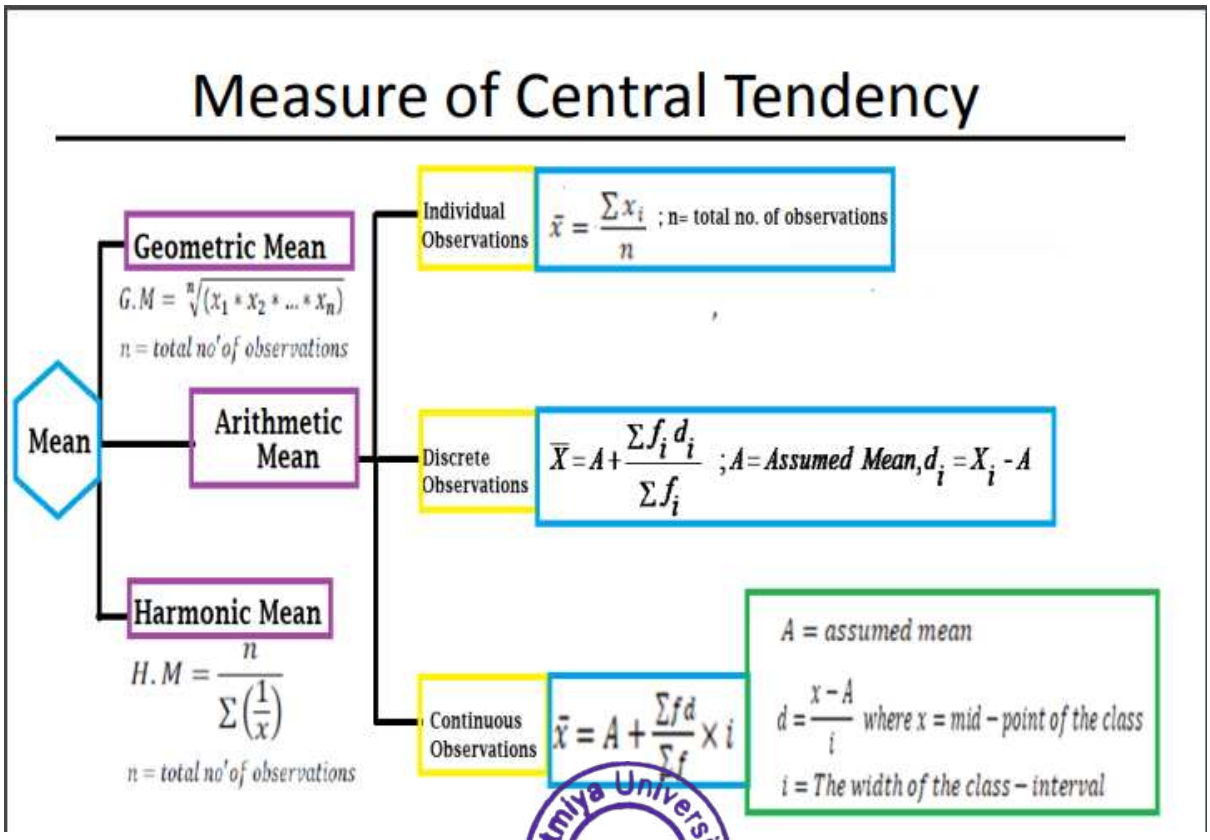

Atmiya University Rajkot

Question 1: The marks obtained by 10 students in class 12th in a mathematics examination are 25,30, 21, 55, 40, 45, 17, 48, 35, 42. Find mean.

Ans: 35.8

Q 2: find the A.M. from the following frequency distribution

X	5	6	7	8	9	10	11	12	13	14
F	25	45	90	165	112	96	81	26	18	12

Ans:8.83

Q 3: Find the A.M. of the marks from the following data:

Marks	0-10	10-20	20-30	30-40	40-50	50-60
No. of students	12	18	27	20	15	8

Ans: 28.2

Arithmetic Mean from assumed mean: If the value of x or f are large, the calculation of mean becomes quite time consuming. In such cases, the provisional mean "a" is taken as that value of x(mid value of the class interval) which corresponds to the highest frequency or which comes under the middle value of the frequency distribution. This number is called assumed mean.

Q 4: The daily earnings (in rupees) of employees working on a daily basis in a firm are

Daily earnings	100	120	140	160	180	200	220
No of employees	3	6	10	15	24	42	75

Calculate the mean of daily earnings.

Ans: 194.51

Q 5: Calculate the mean for the following frequency distribution:

Class	0-8	8-16	16-24	24-32	32-40	40-48
Frequency	8	7	16	24	15	7

Ans: 25.403

Atmiya University Rajkot

Q 6: Calculate the A.M. of the following distribution:

Class interval	0-10	10-20	20-30	30-40	40-50	50-60	60-70	70-80
Frequency	3	8	12	15	18	16	11	5

Ans: 42.5

Question on A.M by step deviation method:

Q 7: Calculate the A.M. of the following marks obtained by students in mathematics:

X(marks)	5	10	15	20	25	30	35	40	45	50
F(no of students)	20	43	75	67	72	45	39	9	8	6

Ans: 22.214

Q 8: Following is the distribution of marks obtained by 60 students in a mathematics test:

Marks	No of students
More than 0	60
More than 10	56
More than 20	40
More than 30	20
More than 40	10
More than 50	3

Calculate A.M.

Ans: 26.5

Q 9: The mean marks of 100 students was found to be 40. Later on, it was discovered that a score of 53 was misread as 83. Find the correct mean.

Ans: 39.70

Atmiya University Rajkot

❖ Geometric Mean

Geometric Mean:

If $x_1, x_2, \ldots, x_n$ are 'n' observations, then the G.M is define is the nth root of their product.

$$G.M = \sqrt[n]{(x_1 * x_2 * \ldots * x_n)}$$

OR

$$\log(G.M) = \frac{1}{n}[\log x_1 + \cdots + \log x_n]$$

Ex – 1 : Find the Geometric mean of the numbers 50,100,200.

Solu : $G.M = \sqrt[3]{50 \times 100 \times 200} = 100$

Q 10: Calculate the geometric mean of the following data: 10,110,120,50,52,80
Ans: 54.916

Q 11: Find G.M. of the following data

x	5	10	15	20	25	30
f	13	18	50	40	10	6

Ans: 14.9

Q 12: Find G.M. of the following data

Marks	0-10	10-20	20-30	30-40
No of students	5	8	3	4

Ans: 14.57

Q13: Find G.M. of the following data

class	5-15	15-25	25-35	35-45	45-55
Frequency	10	22	25	20	8

Ans: 26.649

Atmiya University Rajkot

Q 14: Find G.M. of the following data

Class	8-19	19-30	30-41	41-52	52-63
Frequency	7	17	21	29	8

Ans: 34.905

❖ Harmonic Mean

Harmonic Mean:

Harmonic mean is defined as the reciprocal mean of reciprocals of the observations.

If $x_1, x_2, \dots, x_n$ are 'n' observations, then

$$H.M = \frac{n}{\Sigma\left(\frac{1}{x}\right)}, n = total\ no'of\ observations$$

Ex – 1 : Find the Harmonic mean of 3 –observations 2,4 and 8.

Solu : $H.M = \frac{3}{\frac{1}{2}+\frac{1}{4}+\frac{1}{8}} = \frac{3}{0.5+0.25+0.125} = 3.429$

Q 15: Find H.M. of 3,6,12,24

Ans: 6.4

Q 16: Calculate H.M. of the following distribution

X	20	21	22	23	24	25
f	4	2	7	1	3	1

Ans: 21.903

Q 17: Find H.M.

X	10	11	12	13	14
F	5	8	10	9	6

Ans: 11.945

Atmiya University Rajkot

Q 18: Find H.M.

Class	0-10	10-20	20-30	30-40	40-50	50-60	60-70
Frequency	5	8	11	21	35	30	22

Ans: 31.1703

Q 19: Find H.M.

Class	5-15	15-25	25-35	35-45	45-55
Frequency	6	9	15	8	4

Ans: 22.95

Relationship between A.M., G.M. and H.M

(A.M)*(H.M.)=(G.M.)^2

Q 20: If the A.M. of two observations is 15 and their G.M. is 9, find their H.M. and the two observations.
Ans: 5.4;3,27

Q 21: Calculate the G.M. and H.M. of ther following series:

x	125	130	75	10	45	0.5	0.4	500	1505

Ans: 22.98; 2.06

Q 22: Find G. M.

Class	5-15	15-25	25-35	35-45	45-55
Frequency	10	22	25	20	8

Atmiya University Rajkot

❖ Median

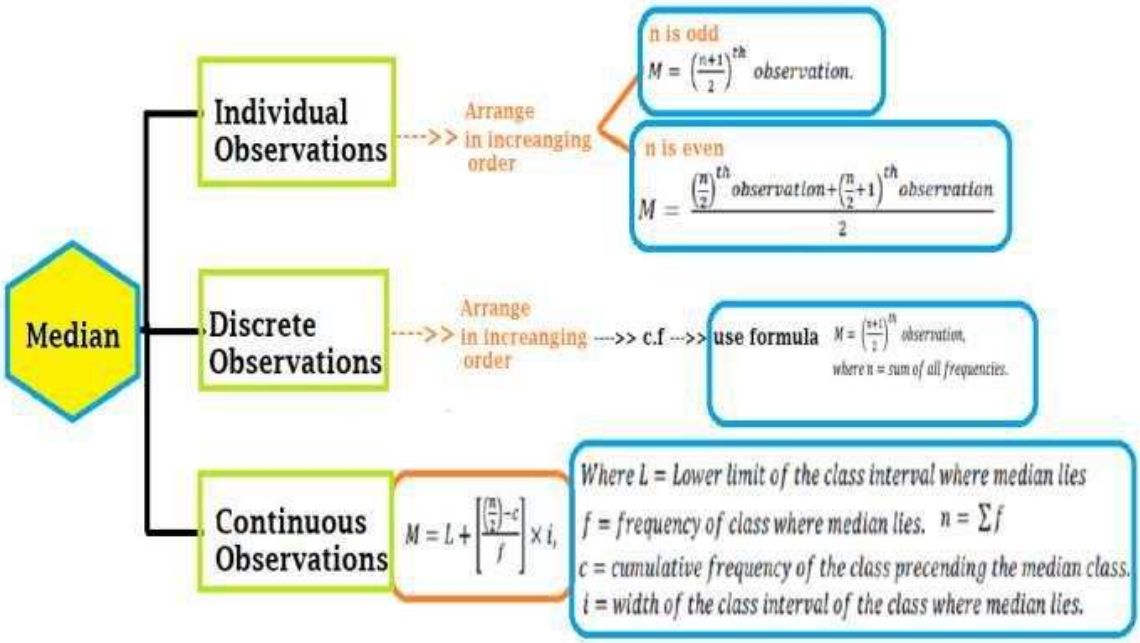

Median is the central value of the variables when the values are arranged in ascending or descending order of magnitude.

In case of ungrouped data, if number of observations is odd, then the median is the middle value and if n is even then median is the average of $(n/2)^{th}$ and $(n/2+1)^{th}$ terms.

In case of discrete frequency distribution, the median is obtained by considering the cumulative frequencies. The steps are as follows:

1. Arrange the values in ascending or descending order
2. Find N/2 where N is sum of frequencies
3. Find cumulative frequency just greater than N/2 and determine the corresponding value of the variable (say x).
4. This x is median.

Q 23: The following table represents the marks obtained by a batch of 12 students in certain class tests in Physics and Chemistry

Physics	25	28	30	32	33	46	48	53	54	60	65	72
Chemistry	20	23	25	27	28	41	43	48	49	55	60	67

Indicate the subject in which the level of achievements is higher.

Ans: 47;42; Physics.

Atmiya University Rajkot

Q 24: Find the median of the following distribution:

X	5	7	9	12	14	17	19	21
F	6	5	3	6	5	3	2	3

Ans: 12

Q 25: The following table gives the weekly distribution expenditures of 100 workers. Find the median weekly expenditure:

Weekly expenditure	0-10	10-20	20-30	30-40	40-50
No of workers	14	23	27	21	15

Ans: 24.815

Q 25: Find the median of the following data:

Age greater than(in years)	0	10	20	30	40	50	60	70
No of persons	230	218	200	165	123	73	28	8

Ans: 41.6 years

Q 26: Find the median of the following frequency distribution

X	10	11	12	13	14	15	16
F	8	15	25	20	12	10	5

Ans: 12

Q 26: Find the median of the following distribution:

Mid value	1500	2500	3500	4500	5500	6500	7500
Frequency	27	32	65	78	58	32	8

Ans: 4333.33

Atmiya University Rajkot

Q 27: Calculate the median from thr following distribution:

Midvalue	115	125	135	145	155	165	175	185	195
frequency	6	25	48	72	116	60	38	22	3

Ans: 153.79

❖ Mode

- ***Mode:***

  Mode or Model value is defined as that value in a series of observations which occurs most frequently. When frequency distribution is given, then mode is that variate which has maximum frequency.

a) INDIVISUAL OBSERVATION METHOD

- In a given series, a value which is repeated is indicates the values of mode.
- Sometimes there may be two or more than two values which occur with equal frequency, the distribution is then called bimodal or multimodal. Simply both are the mode of the given series.

b) DISCREATE OBSERVATION METHOD

- When frequency distribution is given, then mode is that variate (variable) which has maximum frequency.

❖ Mode

c) CONTINUOUS OBSERVATIONS METHOD

- In this case mode can be calculated by following formula $\boldsymbol{Mode} = \boldsymbol{L} + \left(\frac{f_m - f_1}{2f_m - f_1 - f_2}\right) \times \boldsymbol{i}$,
- $Where\ L = Lower\ limit\ of\ the\ mode\ class$
- $f_1 = Frequency\ of\ the\ class\ precending\ the\ model\ class$
- $f_2 = Frequency\ of\ the\ class\ succeeding\ the\ model\ class$
- $f_m = Frequency\ of\ the\ model\ class$
- $i = Width\ of\ the\ model\ class.$

d) SPECIAL CASE

- In those cases the mean and median are given then we will find the Mode by using the formula
- $Mode\ Z = 3(Median = M) - 2(Mean = \bar{X})$.

e) IMPORTANT NOTE

- In the given series of numbers there are no values repeated then we say that given series has no Mode.

Amiya University Rajkot

Two methods for finding mode:

1. **By inspection:** When frequency distribution is regular then mode is determined by inspection. It is the value of the variable for which frequency is maximum.
2. **By method of grouping:** This method is used when frequency distribution is not regular. In such cases, the difference between the maximum and the preceding frequency or succeeding is very small. In such cases, the value of the mode is determined by preparing a grouping table and analysis table.

Q 28: Compute mode of the following data:
3,4,5,10,15,3,6,7,9,12,10,16,18,20,10,9,8,19,11,14,10,13,17,9,11
Ans: 10.

Q 29: Compute mode:

X	5	10	15	20	25	30	35	40
F	2	4	6	10	15	9	5	4

Ans: 25

Q 30: Calculate the mode from the following frequency distribution:

X	50	51	52	53	54	55	56	57	58	59	60
F	2	4	5	6	8	5	4	7	11	5	3

Ans: 58

Que 31: Find mode

Profit/shop	0-10	100-200	200-300	300-400	400-500	500-600
No of shops	12	18	27	20	17	6

Ans: 256.25

Que 32: Calculate Mode for the following distribution:

Class interval	0-4	4-8	8-12	12-16
Frequency	4	8	5	6

Ans:6.28

Atmiya University Rajkot

Q 33: Find mode

Midvalue	1	2	3	4	5	6	7	8
frequency	5	50	45	30	20	10	15	5

Ans: 2.875

Merits, Demerits and uses of Mean

Merits :

- It can be easily calculated
- Its calculations are based on all the observations
- It is easy to understand
- it is the average obtained by calculations and it does not depend upon any position.
- It is rigidly defined by the mathematical formula

Demerits :

- It may not be represented in actual data and so it is theoretical.
- The extreme values have greater effect on mean
- It can not be calculated if all the values are not known.
- It can not be determined for the qualitative data like beauty, honesty etc.,.
- Uses of Mean :
- It is extensively used in practical statistics
- Estimates are always obtained by mean

Merits, Demerits and uses of Median

Merits :

- It is easily understood.
- It is not affected by extreme values
- It can be located graphically
- It is the best measure for qualitative data like beauty, honesty etc.,.

Demerits :

- It is not subject to algebraic treatments
- It can not represent the irregular distribution series
- It is a positional average and is based on the middle item.

Uses of Median : It is useful in those cases where numerical measurements are not possible. It is generally used in studying phenomena like skill, honesty, intelligence, etc.

Atmiya University Rajkot

Module III
Measure of Dispersion

Introduction

The meaning of dispersion is scatteredness. It helps in finding out the variability of the data or scatteredness of individual items in a given distribution.
In other words, the degree to which numerical data tend to spread about an average value is called dispersion of data.
Types of measure of Dispersion:

- **Absolute measure of dispersion**: when dispersion is expressed in terms of original units.
  - Range
  - Mean Deviation
  - Standard Deviation
- **Relative measure of dispersion** : It expresses variability of data in terms of some relative value.
  - Co-efficient of mean deviation
  - Co-efficient of standard deviation

Range: It is the simplest measure of dispersion. It is the difference between the maximum (L) and minimum (S) value given in a data set.
Example: $1, 2, 3, 5, 6, 7$
Range:$7 - 1 = 6$.
Co-efficient of Range or Relative Range

$$R = \frac{L - S}{L + S}$$

Que Find the range and co-efficient of range of the weights of 10 students from the following data: $41, 20, 15, 65, 73, 84, 53, 35, 71, 55$

Atmiya University Rajkot

Ans: 69;0.696

Que: Find the range and the co-efficient of range of the marks obtained by 100 students

Ans: 80;1

Marks	No. of students
0-10	13
10-20	8
20-30	7
30-40	10
40-50	11
50-60	23
60-70	18
70-80	10

Standard Deviation

Individual Data:

$$\sigma = \sqrt{\frac{\sum (x-\bar{x})^2}{n}}$$
$$= \sqrt{\frac{\sum x^2}{n} - \left(\frac{\sum x}{n}\right)^2}$$

where

$$\bar{x} = \frac{\sum x}{n} \text{ (Arithmetic mean)}$$

Discrete Data:

$$\sigma = \sqrt{\frac{\sum f(x-\bar{x})^2}{N}}$$
$$= \sqrt{\frac{\sum fx^2}{N} - \left(\frac{\sum fx}{N}\right)^2}$$
$$= \sqrt{\frac{\sum fd^2}{N} - \left(\frac{\sum fd}{N}\right)^2}$$

where $d = x_i - A$(assumed mean) and $N = \sum f_i$

Continuous data:

$$\sigma = h\sqrt{\frac{\sum fd^2}{N} - \left(\frac{\sum fd}{N}\right)^2}$$

Atmiya University Rajkot

where $d = \frac{x_i - A}{h}$

Variance: The variance is the square of the standard deviation and is denoted by σ^2.

Co-efficient of Variation: The standard deviation is an absolute measure of dispersion and co-efficient of variation is a relative measure of dispersion and is denoted by CV and defined as $CV = \frac{\sigma}{\bar{x}} \times 100$, where, σ is standard deviation and $\bar{x}$ is mean.

Example: Calculate the standard deviation of the weights of 10 persons and also find variance: $45, 49, 59, 50, 41, 44, 60, 58, 53, 55$.

Ans: $5.967; 35.6$

Ex: Calculate the S.D. and variance of the following data:

x	10	11	12	13	14	15	16	17	18
f	2	7	10	12	15	11	10	6	3

Ans: 1.987;3.947

Ex: Find S.D. and variance

Ans: 1.3416;1.8

Size of items	10	11	12	13	14	15	16
Frequency	2	7	11	15	10	4	1

Ex: Find S.D.

Ans: 14.285

Marks	10-20	20-30	30-40	40-50	50-60	60-70	70-80
No of students	5	12	15	20	10	4	2

Ex: Find S.D.

Ans:19.88

Class interval	0-10	10-20	20-30	30-40	40-50	50-60	60-70
Frequency	6	14	10	8	1	3	8

Ex: Find S.D.

Ans:11.286

Atmiya University Rajkot

Age(in Years)	10-19	20-29	30-39	40-49	50-59	60-69	70-79	80-89
No of cases	1	0	1	10	17	38	9	3

Ex:Find mean and S.D. by step deviation method:

Ans: 7.94 years

Age(in year)	No of persons
less than 20	0
less than 25	170
less than 30	280
less than 35	360
less than 40	405
less than 45	445
less than 50	480

Examples of co-efficient of variations

Que: The arithmetic mean of the runs cored by three batsmen Amit, sumeet and Rayan in the series are 50, 48 and 12, respectively. The standard deviations of their runs are 15, 12 and 2, respectively. Who is the more consistent of the three?
Ans: Rayan.

Que: The runs scored by two batsman A and B in 9 consecutive matches are given by: which of the batsman is more consistent?

A	85	20	62	28	74	9	69	4	13
B	72	4	15	30	59	15	49	27	26

Ans: B is more consistent.

Que: The following is the record goals scored by team A in a football session:
For team B the average number of goals scored per match was 2.5 with a standard deviation

No of goals scored by team A in the match	0	1	2	3	4
No of matches played in the month	1	9	7	5	3

of 1.25 goals. Find which team may be considered more consistent.
Ans: Team B.

Atmiya University Rajkot

Skewness

Skewness is a measure that refers to the extend of symmetry or asymmetry in a distribution. A distribution is said to be symmetrical when mean, median and mode are equal.
A symmetrical distribution when ploted on graph will give a perfectly bell-shaped curve which is known as a normal curve.

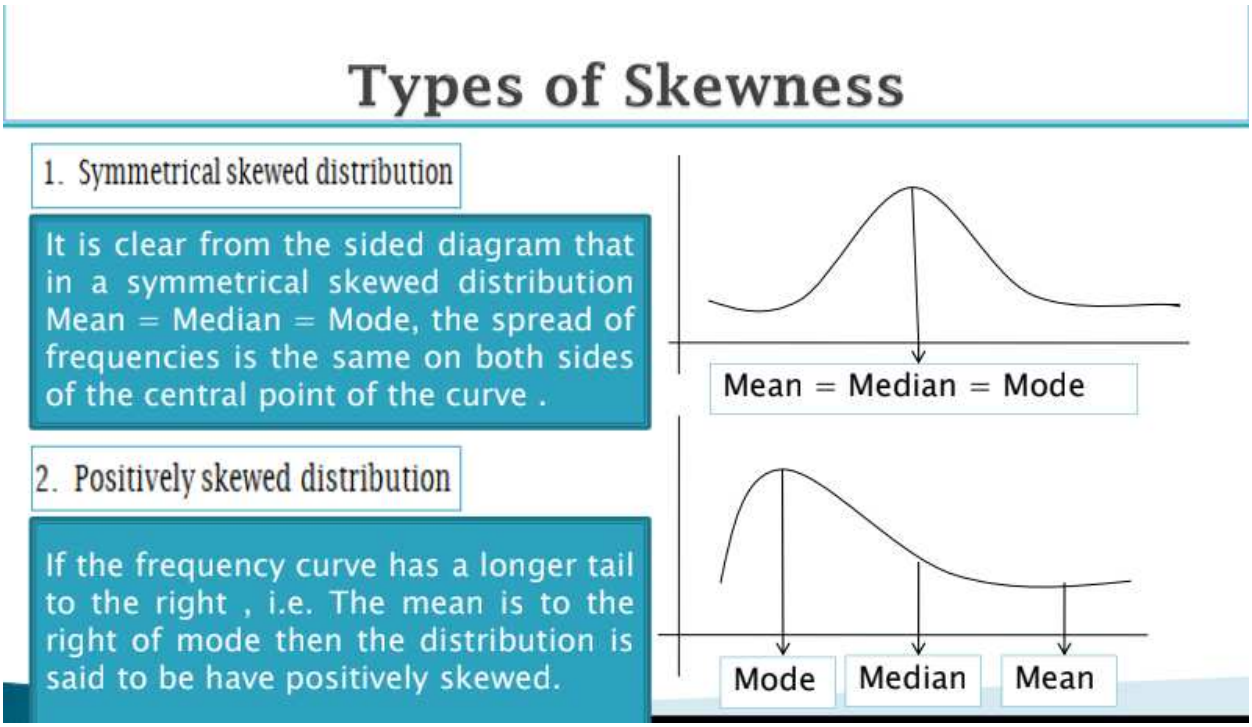

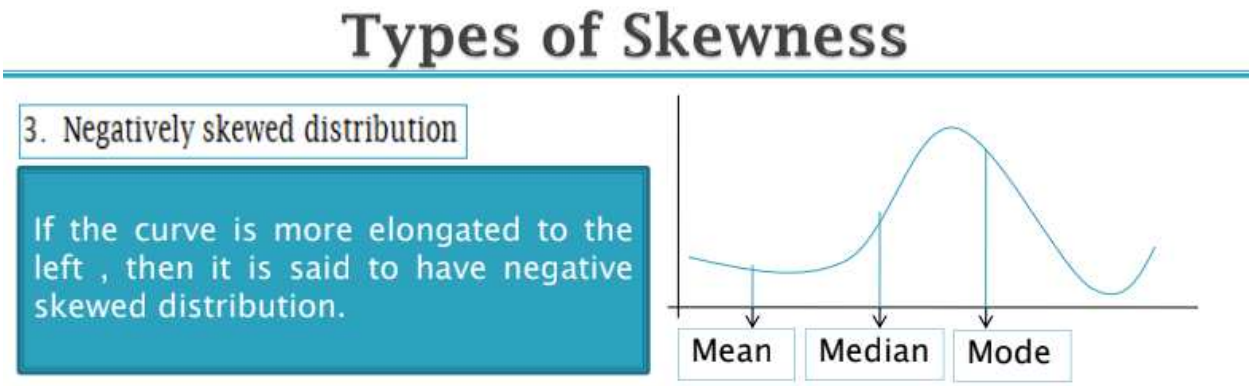

A distribution is said to be asymmetrical or skewed when mean, median mode are not equal. Skewness gives an idea of the nature and degree of concentration of observation about the mean.

Amna University Pakistan

Measure of skewness

It gives the extent and direction of skewness of a distribution. These measures can be absolute or relative.
The absolute measures are known as measure of skewness.
Absolute skewness=mean-mode
If the value of mean is greater then the mode, the skewness will be positive and if mean is less than mode then skewness will be negative.
The relative measures of skewness is called the co-efficient of skewness.

Karl Pearson's co-efficient of skewness

It is denoted by S_k and

$$\begin{aligned} S_k &= \frac{\text{mean-mode}}{\text{standard deviation}} \\ &= \frac{\text{mean-mode}}{\sigma} \\ &= \frac{3(\text{mean-median})}{\sigma} \end{aligned}$$

The coefficient of skewness lies between -1 to 1. For positively skewed distribution $S_k > 0$. For negatively skewed distribution $S_k < 0$. For a symmetrical distribution $S_k = 0$.

Que: Calculate Karl Pearson's coefficient of skewness for the following data:
Ans: 0.082

x	0	1	2	3	4	5	6	7
f	12	17	29	19	8	4	1	0

Que: Calculate absolute measure of skewness for the data:

20,25,30,35,40,45,50,55,60,30

Ans: $9 > 0$ then given observations are positively skewed.

Que: Find absolute measure of skewness

- (i)16,26,36,46,56,66,76,26
- (ii)

x	20	21	22	23	24
y	6	4	5	1	2

Atmiya University Rajkot

- (iii)

Class	0-4	4-8	8-12	12-16	16-20
Frequency	4	6	8	5	2

Ans: (i)17.5, positively skewed
(ii) 1.39 positively skewed
(iii) -0.4 negatively skewed.

Que: Calculate Karl Pearson's co-efficient of skewness from the following data:
Ans: $-0.224 < 0$. Therefore, S_k is negatively skewed distribution.

Wages	10-15	15-20	20-25	25-30	30-35	35-40	40-45	45-50
No. of workers	8	16	30	45	62	32	15	6

Que: The score at an aptitude test by 100 candidates are given below. Calculate Karl Pearson's co-efficient of skewness:
Ans:$S_k = 0.1843$

Marks	0-10	10-20	20-30	30-40	40-50	50-60	60-70
No of Candidates	10	15	24	25	10	10	6

Que: For a group of 10 items $\sum x = 452, \sum x^2 = 24270$ and mode is 43.7. Find Karl Pearson's co-efficient of skewness.
Ans: 0.0766
Que In a distribution, the mean is 65, median is 70, co-efficient of skewness is -0.6. Find mode and co-efficient of variation.
Ans: 80; 38.46%
Que: The following information was obtained from the records of a factory relating to wages: the arithmetic mean is Rs 56.8, and the median is Rs 12.4. Give the information about the distribution of the wages.
Ans: $S_k = -0.65323$, there is negative skewness in wages.

Kurtosis

Kurtosis is a measure of the peakedness of a distribution. The larger the kurtosis, the more peaked will be distribution. It gives an idea about the shape of a frequency distribution.
Types of Kurtosis

- Lepto-kurtic: It is a curve having a higher peak than normal curve. Too much concentration of the items near the center.
- Platy-kutric: A curve having a lower peak (flatter) than the normal curve. There is less concentration of items near the center.
- Meso-kurtic: It is curve having a normal curve. There is equal distribution around the center value (mean). In such cases mean, median and mode are equal.

Atmiya University Rajkot

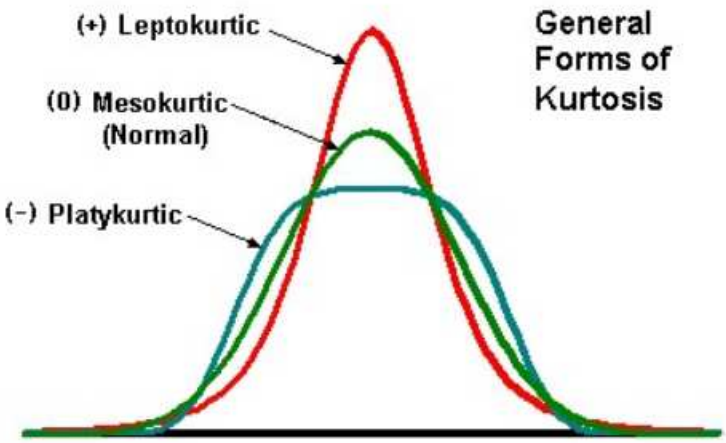

Absolute kurtosis ia always positive number and for normal distribution,i.e. Mesokurtic its value is **3**.

Calculaton of Kurtosis:

- It is measured by β_2
- If the value of $\beta_2 > 3$, curve is more peaked than normal, i.e., leptokurtic.
- If the value of $\beta_2 < 3$, curve is less peaked than normal, i.e., platykurtic.
- If the value of $\beta_2 = 3$, curve having normal peak, i.e., Mesokurtic (Normal)

$$\beta_2 = \sum_{i=1}^{n} \frac{\left(\frac{x_i - \bar{x}}{\sigma}\right)^4}{N}$$

Relative Kurtosis

Relative Kurtosis=Absolute kurtosis-3.

It can be negative.

Que Find kurtosis of the following data:

Ans: Platykurtic

Central size of item	1	2	3	4	5
Frequency	2	3	5	4	1

Que: Find the variance and kurtosis of the following distribution:

Ans: Platykurtic

class Interval	0-10	10-29	20-30	30-40
frequency	1	4	3	2

Atmiya University Rajkot

Correlation and Regression

February 14, 2024

Correlation

Correlation: Co – Means two, therefore correlation is a relation between two variables (like X and Y)

Correlation is a Statistical method that is commonly used to compare two or more variables.

It measures the closeness of the relationship between the variables.

Correlation is a statistical measure (method), which deals with the association (relation) between two or more than two variables.

For example, comparison between income and expenditure, price and demand etc...

TYPES OF CORRELATION

There are three types of correlation as follows :

1. **Type – 1 correlation**

Positive correlation: The correlation is said to be positive, if the values of two variables changing in the same direction. In other words, as X increases, Y also increases. Similarly as X decreases, Y also decreases. For example: Water consumption and Temperature, Height and Weight.

Height(cm)	150	152	155	160	162
Weight(kg)	60	62	64	65	67

Negative correlation: The correlation is said to be negative, if the values of two variables changing in the opposite direction. In other words, as X increases, Y decreases. Similarly as X decreases, Y increases. For example : Speed and travelling time, price and demand.

2. **Type – 2 correlation**

Atmiya University Rajkot

Price(per unit)	10	8	6	5	4	1
Demand(units)	100	200	300	400	500	600

Simple correlation: When only two variables are studied, the relationship is simple correlation. For example: price and demand.

Multiple correlation: When more than two variables are studied, this relationship is known as multiple correlation. For example: price, demand and supply.

- **Partial correlation:** when more than two variables are studied excluding some other variables, this relationship is known as partial correlation.
- **Total correlation:** when more than two variables are studied without excluding any variables, this relationship is known as total correlation.

3. Type – 3 correlation

Depending upon the ratio of change between two variables, the correlation is:

Linear correlation: If the ratio of change between two variables is constant, the correlation is said to be linear. If we plot these points on graph, we obtained

Milk(lt.)	5	10	15	20	25
Curd(kg)	2	4	6	8	10

a straight line.

Non-linear correlation: If the ratio of change between two variables is not constant, the correlation is said to be non-linear.

Expenses	3	6	9	12	15
Sales	10	12	15	15	16

Coefficient of correlation

The numerical measure of correlation or the degree of relationship between variables is called coefficient of correlation and is denoted by "r".

Properties of correlation coefficient

- The value of r always lies between -1 and 1.
- If the value of r is between 0 and 1 then it denotes a positive correlation.

Atmiya University Rajkot

- If the value of r is between -1 and 0 then it denotes a negative correlation.
- If the value of r is 1 then it is a perfect positive correlation.
- If the value of r is -1 then it is a perfect negative correlation.
- If the value of r is 0 then there is no correlation.

METHODS TO FIND CORRELATION

1. GRAPHICAL METHODS
   - Scatter diagram
   - Simple graph
2. MATHEMATICAL METHODS
   - Karl Pearson's coefficient of correlation
   - Spearman's rank coefficient or correlation

Karl Pearson's coefficient of correlation

- $r = \frac{Cov(X,Y)}{\sigma_x \sigma_y}$ where $Cov(X,Y) = \frac{1}{n}\sum(x-\bar{x})(y-\bar{y}); \sigma_x = \sqrt{\frac{\sum(x-\bar{x})^2}{n}}$; $\sigma_y = \sqrt{\frac{\sum(y-\bar{y})^2}{n}}$
- $r = \frac{\sum(x-\bar{x})(y-\bar{y})}{\sqrt{\sum(x-\bar{x})^2}\sqrt{\sum(y-\bar{y})^2}}$
- $r = \frac{\sum xy - \frac{\sum x \sum y}{n}}{\sqrt{\sum x^2 - \frac{(\sum x)^2}{n}}\sqrt{\sum y^2 - \frac{(\sum y)^2}{n}}}$

where $\bar{x}$ and $\bar{y}$ is the mean of x and y, respectively. $Cov(X,Y)$ is covariance of x and y.

Calculate the correlation coefficient between x and y by using the following data-

Que 1:

x	2	4	5	6	8	11
y	18	12	10	8	7	5

Table 1: Que 1 table

Atmiya University Rajkot

Ans: -0.9203

Que 2:

x	12	9	8	10	11	13	7
y	14	8	6	9	11	12	3

Table 2: Que 2 table

Ans: 0.949

Que 3:

x	9	8	7	6	5	4	3	2	1
y	15	16	14	13	1	12	10	8	9

Table 3: Que 3 table

Ans:0.95

Que 4:

x	5	9	13	17	21
y	12	20	25	33	35

Table 4: Que 4 table

Ans: 0.986

Que 5:

x	17	19	21	26	20	28	26	27
y	23	27	25	26	27	25	30	33

Table 5: Que 5 table

Ans: 0.515

Que 6:

x	23	27	28	29	30	31	33	35	36	39
y	18	22	23	24	25	26	28	29	30	32

Table 6: Que 6 table

Ans: 0.996

Que 7: The coefficient of correlation between two variables x and y is 0.48.

Atmiya University Rajkot

The covariance is 36. The variance of x is 16. Find the standard deviation of y.

Ans: 18.75

Que 8: Given $n = 10, \sigma_x = 5.4, \sigma_y = 6.2$ and sum of the product of x and y is 66. Find thee correlation coefficient.

Ans: 0.197

Que 9: From the following instructions: calculate the value of n. $\sum x = 4, \sum y = 4, \sum x^2 = 44, \sum y^2 = 44, \sum xy = -40, r = -1$.

Ans: $n = 8$.

Que 10: A computer operator while calculating the coefficient between two varieties x and y for 25 pairs of observations obtained the following constants: $n = 25, \sum x = 125, \sum x^2 = 650, \sum y = 100, \sum y^2 = 460, \sum xy = 508$.

It was discovered at the time of checking that he had copied down two pairs as $(6, 14)$ and $(8, 6)$ while the corrected pair were $(8, 12)$ and $(6, 8)$. Obtain the correct value of the correlation coefficient.

Ans: 0.67

Atmiya University Rajkot

Spearman's rank coefficient or correlation

Let a group of n individuals be arranged in order of merit with respect to some characteristic. The same group would give a different order (rank) for different characteristics. Considering the order corresponding to two characteristics A and B, the correlation between these n pairs of rank is called the rank correlation in the characteristics A and B for that group of individuals.

Formula

$$R = 1 - \frac{6\sum d^2}{n(n^2-1)},$$

where d is the difference in rank of x and y.

Que 1: Ten participants in a contest are ranked by two judges as follows:

x	1	3	7	5	4	6	2	10	9	8
y	3	1	4	5	6	9	7	8	10	2

Calculate the rank correlation coefficient.

Ans: 0.418

Que 2: Ten competitors in a musical test were ranked by the three judges A, B and C in the following order:

Ranked by A	1	6	5	10	3	2	4	9	7	8
B	3	5	8	4	7	10	2	1	6	9
C	6	4	9	8	1	2	3	10	5	7

Using the rank correlation method, find which pair of judges has the nearest approach to common liking in music.

Ans: A and C have the nearest approach.

Que 3: 10 students got the following percentage of marks in Mathematics and Physics:

Atmiya University Rajkot

Maths(x)	8	36	98	25	75	82	92	62	65	35
Physics(y)	84	51	91	60	68	62	86	58	35	49

Ans: $r = 0.455$

Que 4: The coefficient of rank correlation of the marks obtained by 10 students in Physics and Chemistry was found to be 0.5. It was later discovered that the difference in ranks in the two subjects obtained by one of the students was wrongly taken as 3 instead of 7. Find the correct coefficient of the rank correlation.

Ans: 0.26.

Regression

It is defined as a method of estimating the value of one variable when that of the other is known and the variables are correlated.

Types of Regression

- Simple and Multiple Regression
- Linear and non-linear Regression

Depending upon the number of variables, regression may be simple and Multiple:

- **Simple** The regression analysis for studying only two variables at a time is known as simple regression.
- **Multiple** The regression analysis for studying more than two variables at a time is known as multiple regression.

Depending upon the regression curve, regression may be linear or non-linear.

- **Linear** If regression curve is a straight line.
- **Non-linear** If regression curve is not a straight line, i.e., not a first-degree equation in the variables x and y, then it is non-linear.

Atmiya University Rajkot

Line of Regression

If the variables, which are highly correlated, are plotted on a graph then the points lie in a narrow strip. If all the points in the scatter diagram cluster around a straight line, the line is called the line of regression.

Line of Regression of y on x

It is the line that gives the best estimate for the value of y for any given value of x. The regression equation of y on x is given by

$$y - \bar{y} = r\frac{\sigma_y}{\sigma_x}(x - \bar{x}).$$

It is also written as

$$y = a + bx$$

Line of Regression of x on y

It is the line that gives the best estimate for the value of x for any given value of y. The regression equation of x on y is given by

$$x - \bar{x} = r\frac{\sigma_x}{\sigma_y}(y - \bar{y}).$$

It is also written as

$$x = a + by$$

where $\bar{x}$ and $\bar{y}$ are means of x and y series, respectively. σ_x and σ_y are standard deviations of x and y series, respectively. r is correlation between x and y.
Formula's:

- $\sigma_x = \sqrt{\frac{\sum(x-\bar{x})^2}{n}} = \sqrt{\frac{\sum x^2}{n} - \left(\frac{\sum x}{n}\right)^2}$
- $\sigma_y = \sqrt{\frac{\sum(y-\bar{y})^2}{n}} = \sqrt{\frac{\sum y^2}{n} - \left(\frac{\sum y}{n}\right)^2}$
- $r = \frac{\sum(x-\bar{x})(y-\bar{y})}{\sqrt{\sum(x-\bar{x})^2}\sqrt{\sum(y-\bar{y})^2}}$

Atmiya University Rajkot

Regression coefficients:

The slope b of the line of regression of y on x is called the coefficient of regression of y on x

$$\begin{aligned} b_{yx} &= r\frac{\sigma_y}{\sigma_x} \\ &= \frac{\sum(x-\bar{x})(y-\bar{y})}{\sum(x-\bar{x})^2} \\ &= \frac{\sum xy - \frac{\sum x \sum y}{n}}{\sum x^2 - \frac{(\sum x)^2}{n}} \\ &= \frac{\sum d_x d_y - \frac{\sum d_x \sum d_y}{n}}{\sum d_x^2 - \frac{(\sum d_x)^2}{n}} \end{aligned}$$

where $d_x = x - a$(assumed mean of x) and $d_y = y - b$(assumed mean of y) Similarly,

$$\begin{aligned} b_{xy} &= \text{Regression coefficient of } x \text{ on } y \\ &= \text{slope } b \text{ of the line of regression of } x \text{ on } y \end{aligned}$$

$$\begin{aligned} b_{xy} &= r\frac{\sigma_x}{\sigma_y} \\ &= \frac{\sum(x-\bar{x})(y-\bar{y})}{\sum(y-\bar{y})^2} \\ &= \frac{\sum xy - \frac{\sum x \sum y}{n}}{\sum y^2 - \frac{(\sum y)^2}{n}} \\ &= \frac{\sum d_x d_y - \frac{\sum d_x \sum d_y}{n}}{\sum d_y^2 - \frac{(\sum d_y)^2}{n}} \end{aligned}$$

Properties of Regression Coefficients

The coefficient of correlation is the geometric mean of the coefficient of regression that is

$$r = \sqrt{b_{yx} \times b_{xy}}$$

- If $b_{yx} = \frac{1}{b_{xy}}$, then the two lines coincide.

Atmiya University Rajkot

- If $b_{yx} > 1$ then $b_{xy} < 1$ and vice-versa.
- If $r = 0$ then regression lines are perpendicular.
- Both regression coefficients will have the same sign. that is, either both positive or both negative.
- The sign of correlation coefficient is same as that of the regression coefficient, that is, $r > 0$ if $b_{xy} > 0$ and $b_{yx} > 0$; and $r < 0$ if $b_{xy} < 0$ and $b_{yx} < 0$.

Question 1 The score of 12 students in their Mathematics (X) and Statistics (Y) classes are Then find the regression line Y on X.

X	2	3	4	4	5	6	6	7	7	8	10	10
Y	1	3	2	4	4	4	6	4	6	7	9	10

Ans: $Y = 0.99X - 0.94$

Que 2: Obtain two regression lines from the following data and hence find the correlation coefficient

x	6	2	10	4	8
y	9	11	5	8	7

Ans: $n = 5$, $\bar{x} = \frac{\sum x}{n} = \frac{30}{5} = 6$, $\bar{y} = \frac{\sum y}{n} = \frac{40}{5} = 8$

x	y	$x - \bar{x}$	$y - \bar{y}$	$(x - \bar{x})^2$	$(y - \bar{y})^2$	$(x - \bar{x})(y - \bar{y})$
6	9	0	1	0	1	0
2	11	-4	3	16	9	-12
10	5	4	-3	16	9	-12
4	8	-2	0	4	0	0
8	7	2	-1	4	1	-2
$\sum x = 30$	40	-	-	40	20	-26

$$\begin{aligned} b_{yx} &= \frac{\sum(x - \bar{x})(y - \bar{y})}{\sum(x - \bar{x})^2} \\ &= \frac{-26}{40} \\ &= -0.65 \end{aligned}$$

Amiya University Rajkot

$$
\begin{aligned}
b_{xy} &= \frac{\sum(x-\bar{x})(y-\bar{y})}{\sum(y-\bar{y})^2} \\
&= \frac{-26}{20} = -1.3
\end{aligned}
$$

The equation of regression line of y on x is

$$
\begin{aligned}
y - \bar{y} &= b_{yx}(x - \bar{x}) \\
y - 8 &= -0.65(x - 6) \\
y &= -0.65x + 11.9
\end{aligned}
$$

The equation of regression line of x on y is

$$
\begin{aligned}
x - \bar{x} &= b_{xy}(y - \bar{y}) \\
x - 6 &= -1.3(y - 8) \\
x &= -1.3y + 16.4 \\
r &= \sqrt{b_{yx}b_{xy}} = \sqrt{(-0.65)(-1.3)} = 0.9192
\end{aligned}
$$

Since both b_{xy} and b_{yx} are negative, thus, r is negative.
$r = -0.9192$

Que 3: For the following observations, find both regression lines, regression coefficients b_{yx} and b_{xy} and find the correlation coefficient between x and y:
(4,2);(2,3);(3,2);(4,4);(2,4)
Ans: $x = 0.25y + 2.25$; $x = 0.25y + 2.25$; $-1/4; -1/4; 1/4$
Steps to solve according to the requirement of formula. Equation of regression line Y on X is
$y - \bar{y} = b_{yx}(x - \bar{x})$
we have to find $\bar{x}, \bar{y}, b_{yx}$
$b_{yx} = \frac{\sum(x-\bar{x})(y-\bar{y})}{\sum(x-\bar{x})^2} = \frac{-1}{4} = -0.25$
$b_{xy} = \frac{\sum(x-\bar{x})(y-\bar{y})}{\sum(y-\bar{y})^2} = \frac{-1}{4} = -0.25$
$r = \sqrt{b_{yx} \times b_{xy}} = \frac{1}{4}$
As sign of r remains the same, therefore, $r = -\frac{1}{4}$.

Atmiya University Rajkot

x	y	$x-\bar{x}$	$y-\bar{y}$	$(x-\bar{x})^2$	$(y-\bar{y})^2$	$(x-\bar{x})(y-\bar{y})$
4	2	1	-1	1	1	-1
2	3	-1	0	1	0	0
3	2	0	-1	0	1	0
4	4	1	1	1	1	-1
2	4	-1	1	1	1	-1
$\bar{x}=3$	$\bar{y}=3$	-	-	4	4	-1

Line of regression y on x is:

$$\begin{aligned}(y-3) &= \frac{-1}{4}(x-3)\\ y-3 &= -0.25(x-3)\\ y-3 &= -0.25x+0.75\\ y &= -0.25x+3.75\end{aligned}$$

This is the required line of regression of y on x.
Similarly, line of regression x on y is

$$\begin{aligned}x-\bar{x} &= b_{xy}(y-\bar{y})\\ x-3 &= -0.25(y-3)\\ x &= -0.25y+3.75\end{aligned}$$

This is the required line of regression of x on y.
Que 4: The following data regarding the heights(y) and weights(x) of 100 college students are given:

$$\sum x = 15000, \sum x^2 = 2272500, \sum y = 6800, \sum y^2 = 463025, \sum xy = 1022250$$

Find the coefficient of correlation between height and weight and also the equation of regression of height and weight.
Ans: $n = 100$

$$\begin{aligned}b_{yx} &= \frac{\sum xy - \frac{\sum x \sum y}{n}}{\sum x^2 - \frac{(\sum x)^2}{n}}\\ &= \frac{1022250 - \frac{(15000)(6800)}{100}}{2272500 - \frac{(15000)^2}{100}}\end{aligned}$$

Atmiya University Rajkot

$$
\begin{aligned}
&= 0.1 \\
b_{xy} &= \frac{\sum xy - \frac{\sum x \sum y}{n}}{\sum y^2 - \frac{(\sum y)^2}{n}} \\
&= \frac{1022250 - \frac{(15000)(6800)}{100}}{463025 - \frac{(68000)^2}{100}} \\
&= 3.6 \\
r &= \sqrt{b_{yx} \times b_{xy}} \\
&= \sqrt{(0.1)(3.6)} \\
\bar{x} &= \frac{\sum x}{n} = \frac{15000}{100} = 150 \\
\bar{y} &= \frac{\sum y}{n} = \frac{6800}{100} = 68
\end{aligned}
$$

The equation of the line of regression of y on x is

$$
\begin{aligned}
y - \bar{y} &= b_{yx}(x - \bar{x}) \\
y - 68 &= 0.1(x - 150) \\
y &= 0.1x + 53
\end{aligned}
$$

The equation of the line of regression of x on y is

$$
\begin{aligned}
x - \bar{x} &= b_{xy}(y - \bar{y}) \\
x - 150 &= 3.6(y - 68) \\
x &= 3.6y - 94.8
\end{aligned}
$$

Que 5: From the following data calculate two equations of lines of regression where correlation coefficient $r = 0.5$.

-	X	Y
Mean	60	67.5
Standard deviation	15	13.5

Ans: $Y = 0.45X + 40.5, X = 0.556Y + 22.47$

Que 6 From the following data calculate two equations of lines of regression, where correlation coefficient $r = 0.52$.

Aaniya University Rajkot

-	X	Y
Mean	508.4	23.7
Standard deviation	36.8	4.6

Ans: $X = 4.16Y + 409.81, Y = 0.065X - 9.35$

Que 7: From the following data, obtain the two regression lines and correlation coefficient.

Ans:$b_{xy} = 1.1746$, $b_{yx} = 0.785$, $x = 1.1746y - 2.1426$, $y = 0.785x + 7.995$

Sales(x)	100	98	78	85	110	93	80
Purchase(y)	85	90	70	72	95	81	74

Que 8: Find the two lines of regression from the following data:(By assumed mean method) Hence, estimate

Age of husband(x)	25	22	28	26	35	20	22	40	20	18
Age of wife(y)	18	15	20	17	22	14	16	21	15	14

- (i) the age of husband when the age of wife is 19.
- (ii) the age of wife when the age of the husband is 30.

Ans:$b_{yx} = 0.385$, $b_{xy} = 2.227$, $y = 0.385x + 7.344$, $x = 2.227y - 12.704$.

The estimated age of husband when the age of wife is 19 is

$x = 2.227(19) - 12.704 = 29.601$ or nearly 30

Age of husband is 30 years.

The estimated age of wife when the age of husband is 30 is

$y = 0.385(30) + 7.344 = 18.894$ or nearly 19

Age of wife is 19 years.

Atmiya University Rajkot

Probability Distribution and Statistical Inferences

1 Introduction

Random experiment: An experiment is random means that the experiment has more than one possible outcome and it is not possible to predict with certainty which outcome that will be. For instance, in an experiment of tossing an ordinary coin, it can be predicted with certainty that the coin will land either heads up or tails up, but it is not known for sure whether heads or tails will occur. If a die is thrown once, any of the six numbers, i.e., 1, 2, 3, 4, 5, 6 may turn up, not sure which number will come up.

- **Outcome:** A possible result of a random experiment is called its outcome for example if the experiment consists of tossing a coin twice, some of the outcomes are HH, HT etc.

- **Sample Space:** A sample space is the set of all possible outcomes of an experiment. In fact, it is the universal set S pertinent to a given experiment.
  The sample space for the experiment of tossing a coin twice is given by

$$S = \{HH, HT, TH, TT\} \tag{1}$$

  The sample space for the experiment of drawing a card out of a deck is the set of all cards in the deck.

Atmiya University Rajkot

Event: An event is a subset of a sample space S. For example, the event of drawing an ace from a deck is A = Ace of Heart, Ace of Club, Ace of Diamond, Ace of Spade

Types of events:

- **Impossible and Sure Events:** The empty set ϕ and the sample space S describe events. In fact, ϕ is called an impossible event and S, i.e., the whole sample space is called a sure event.

- **Simple or Elementary:** Event If an event E has only one sample point of a sample space, i.e., a single outcome of an experiment, it is called a simple or elementary event. The sample space of the experiment of tossing two coins is given by

$$S = \{HH, HT, TH, TT\} \tag{2}$$

  The event $E_1 = \{HH\}$ containing a single outcome HH of the sample space S is a simple or elementary event. If one card is drawn from a well shuffled deck, any particular card drawn like 'queen of Hearts' is an elementary event.

- **Compound Event:** If an event has more than one sample point it is called a compound event, for example, $S = \{HH, HT\}$ is a compound event.

- **Complementary event:** Given an event A, the complement of A is the event consisting of all sample space outcomes that do not correspond to the occurrence of A.

Mutually exclusive: Two events A and B of a sample space S are mutually exclusive if the occurrence of any one of them excludes the occurrence of the other event. Hence, the two events A and B cannot occur simultaneously, and thus $P(A \cap B) = 0$.

Atmiya University Rajkot

Remark: Simple or elementary events of a sample space are always mutually exclusive. For example, the elementary events $\{1\}, \{2\}, \{3\}, \{4\}, \{5\}$ or $\{6\}$ of the experiment of throwing a dice are mutually exclusive.

Consider the experiment of throwing a die once. The events E = getting a even number and F = getting an odd number are mutually exclusive events because $E \cap F = \phi$.

Exhaustive events: If $E_1, E_2, ..., E_n$ are n events of a sample space S and if $E_1 \cup E_2 \cup E_3 \cup ... \cup E_n = \bigcup_{i=1}^{n} E_i = S$ then $E_1, E_2, ..., E_n$ are called exhaustive events.

In other words, events $E_1, E_2, ..., E_n$ of a sample space S are said to be exhaustive if atleast one of them necessarily occur whenever the experiment is performed.

Consider the example of rolling a die. We have $S = \{1, 2, 3, 4, 5, 6\}$. Define the two events

A: 'a number less than or equal to 4 appears.'

B: 'a number greater than or equal to 4 appears.'

Now $A : \{1, 2, 3, 4\}, B = \{4, 5, 6\}$

$A \cup B = 1, 2, 3, 4, 5, 6 = S$

Such events A and B are called exhaustive events.

Independent Events: Let E and F be two events associated with a sample space S. If the probability of occurrence of one of them is not affected by the occurrence of the other, then we say that the two events are independent. Thus, two events E and F will be independent, if

(a) $P(F|E) = P(F)$, provided $P(E) \neq 0$

(b) $P(E|F) = P(E)$, provided $P(F) \neq 0$

Using the multiplication theorem on probability, we have

(c) $P(E \cap F) = P(E)P(F)$

Mutually exclusive and exhaustive events: If $E_1, E_2, ..., E_n$ are n events of a sample space S and if $E_i \cap E_j = \phi$ for every $i \neq j$, i.e., E_i and E_j are pairwise disjoint and $\bigcup_{i=1}^{n} E_i = S$ then the events $E_1, E_2, ..., E_n$ are called

Atmiya University Rajkot

mutually exclusive and exhaustive events.

Consider the example of rolling a die. We have $S = \{1, 2, 3, 4, 5, 6\}$ Let us define the three events as

A = a number which is a perfect square

B = a prime number

C = a number which is greater than or equal to 6.

Now $A = \{1, 4\}, B = \{2, 3, 5\}, C = \{6\}$

Note that $A \cup B \cup C = \{1, 2, 3, 4, 5, 6\} = S$. Therefore, A, B and C are exhaustive events. Also $A \cap B = B \cap C = C \cap A = \phi$. Hence, the events are pairwise disjoint and thus mutually exclusive.

Classical definition: If all of the outcomes of a sample space are equally likely, then the probability that an event will occur is equal to the ratio:

$$\frac{\text{The number of outcomes favourable to the event}}{\text{The total number of outcomes of the sample space}}$$

Suppose that an event A can happen in m ways out of a total of n possible equally likely ways.

Then the classical probability of occurrence of the event is denoted by

$$P(E) = \frac{m}{n}$$

The probability of non occurrence of the event E is denoted by P(not E) = 1-P(E).

Thus, P (E) + P (not E) = 1

The event 'not E' is denoted by $\bar{E}$ or E' (complement of E).

Random Variable and its Probability Distribution: A random variable is a real valued function whose domain is the sample space of a random experiment.

The probability distribution of a random variable X is the system of numbers The function$p(x_i)$ is called the probability function or probability mass function (in case of the discrete probability distribution) or probability density function (in case of the continuous probability distribution) of the random

Atmiya University Rajkot

X :	x_1	x_2	...	x_n
P(X):	$p(x_1)$	$p(x_2)$	...	$p(x_n)$

variable x.

Distribution Functions for Random Variables: The cumulative distribution function, or briefly the distribution function, for a random variable X is defined by

$$F(x) = P(X \leq x)$$

where x is any real number, i.e., $-\infty x \infty$.
The distribution function $F(x)$ has the following properties:

1. $F(x)$ is non-decreasing [i.e., $F(x) \leq F(y)$ if $x \leq y$].
2. $lim_{x \to -\infty} F(x) = 0$; $\lim_{x \to \infty} F(x) = 1$.

Distribution Functions for Discrete Random Variables: The distribution function for a discrete random variable X can be obtained from its probability function by noting that, for all x in $(-\infty, \infty)$.

$$F(x) = P(X \leq x) = \sum_{u \leq x} f(u)$$

where the sum is taken over all values u taken on by X for which $u \leq x$.
If X takes on only a finite number of values $x_1, x_2, ..., x_n$, then the distribution function is given by

$$F(x) = \begin{cases} 0 & -\infty < x < \infty \\ f(x_1) & x_1 \leq x < x_2 \\ f(x_1) + f(x_2) & x_2 \leq x < x_3 \\ \vdots & \vdots \\ f(x_1) + ... + f(x_n) & x_n \leq x < \infty \end{cases}$$

Atmiya University Rajkot

Continuous Random Variables: A non-discrete random variable X is said to be absolutely continuous, or simply continuous, if its distribution function may be represented as

$$F(x) = P(X \leq x) = \int_{-\infty}^{x} f(u)du \qquad (-\infty < x < \infty)$$

where the function $f(x)$ has the properties

1. $f(x) \geq 0$
2. $\int_{-\infty}^{\infty} f(x)dx = 1$

Types of discrete probability distribution:

1. Binomial distribution
2. Bernoulli distribution
3. Normal distribution
4. Multinomial distribution
5. Poisson distribution

Binomial distribution: Consider n independent trials of random experiments which either success or failure. Let p be the probabiltiy of success and $q = 1-p$ be the probability of failure. The probability of x success and $n-x$ failure is given by $p^x q^{n-x}$ (multiplication theorem of probability). But these x success and $n-x$ failures can occur in any ways of the ${}^nC_x$.
Hence the probability of x successes is

$${}^nC_x p^x q^{n-x}$$
$$\text{i.e., } P(X = x) = {}^nC_x p^x q^{n-x}, x = 0, 1, 2, ..., n$$

where $p + q = 1$. The two constants n and p are called the parameters of the distribution.
Conditions of B.D.:

Atmiya University Rajkot

1. The number of trials n is finite.
2. There are only two possible outcomes, success or failure.
3. The trails are independent of each other.
4. The probability of each success p is constant for each trial.

Formula:

1. $E(X) = \text{Mean} = npq$
2. $Var(X) = npq$
3. Standard deviation$= \sqrt{npq}$

Poisson Distribution: It is a limiting case of B.D. under the following conditions:

1. The number of trials should be infinitely large, i.e., $n \to \infty$
2. The probability of each successes p for each trial should be very small, i.e., $p \to 0$.
3. $np = \lambda$ should be finite, where λ is constant.

A random variable X is said to follow P.D., if the probability of x is given by:

$$P(X = x) = p(x) = \frac{e^{-\lambda}\lambda^x}{x!},\ x = 0, 1, 2, ...$$

where λ is called the parameter of the distribution.

Conditions of P.D.

1. The random variable X should be discrete.
2. The number of trials n is very large.
3. The probability of each success p is very small.

Atmiya University Rajkot

4. $np = \lambda$ is finite.

Constants of P.D.

1. Mean= λ
2. Variance= λ
3. Standard deviation= $\sqrt{\lambda}$

Sample and Population

Population: A population is the entire group that you want to draw conclusions about.

It can mean a group containing elements of anything you want to study, such as objects, events, organizations, countries, species, organisms, etc.

Sample: A sample is the specific group that you will collect data from. It is an unbiased data and a subset of the population that best represents the data. The size of the sample is always less than the total size of the population.

Comparison table

BASIS FOR COMPARISON	POPULATION	SAMPLE
Meaning	Population refers to the collection of all elements possessing common , characteristics that comprises universe.	Sample means a subgroup of the members of population chosen for participation in the study.
Includes	Each and every unit of the group.	Only a handful of units of population
Characteristic	Parameter	Statistic
Data collection	Complete enumeration or census	Sample survey or sampling
Focus on	Identifying the characteristics.	Making inferences about population.

A group of elements or units under study can be regarded as a population

Atmiya University Rajkot

and the characteristics of population can be described with some measures such as total numbers of items, average, variance, etc. These measures are known as parameters of the population. Thus, we can define the parameter as:

A parameter is a function of population values that are used to represent the certain characteristic of the population. For example, population mean, population variance, population coefficient of variation, population correlation coefficient, etc. are all parameters. Population parameter mean usually denoted by μ and population variance denoted by σ^2.

Key Differences Between Population and Sample

(i) The collection of all elements possessing common characteristics that comprise universe is known as the population. A subgroup of the members of population chosen for participation in the study is called sample.

(ii) The population consists of each and every element of the entire group. On the other hand, only a handful of items of the population is included in a sample.

(iii) The characteristic of population based on all units is called parameter while the measure of sample observation is called statistic.

(iv) When information is collected from all units of population, the process is known as census or complete enumeration. Conversely, the sample survey is conducted to gather information from the sample using sampling method.

(v) With population, the focus is to identify the characteristics of the elements whereas in the case of the sample; the focus is made on making the generalisation about the characteristics of the population, from which the sample came from.

Hypothesis

Testing of Hypothesis: In our day-to-day life, we see different commercials advertisements in television, newspapers, magazines, etc. such as

(i) The refrigerator of certain brand saves up to 20% electric bill,

Atmiya University Rajkot

(ii) The motorcycle of certain brand gives 60 km/liter mileage,
(iii) A detergent of certain brand produces the cleanest wash,
(iv) Ninety nine out of hundred dentists recommend brand A toothpaste for their patients to save the teeth against cavity, etc.
Now, the question may arise in our mind "can such types of claims be verified statistically?" Fortunately, in many cases the answer is "yes".
The technique of testing such type of claims or statements or assumptions is known as testing of hypothesis. The truth or falsity of a claim or statement is never known unless we examine the entire population. But practically it is not possible in most situations so we take a random sample from the population under study and use the information contained in this sample to take the decision whether a claim is true or false.
In hypothesis testing problems first of all we should being identifying the claim or statement or assumption or hypothesis to be tested and write it in the words. Once the claim has been identified then we write it in symbolical form if possible. As in the above examples,
(i) Customer of the motorcycle may write the claim or postulate the hypothesis "the motorcycle of a certain brand gives the average mileage 60 km/liter." Here, we concern with the average mileage of the motorcycle so let μ represents the average mileage then our hypothesis becomes $\mu = 60 km/liter$.
(ii) Similarly, the businessman of banana may write the statement or postulate the hypothesis "the average weight of a banana of Kerala is greater than 200 gm." So our hypothesis becomes $\mu > 200 gm$.
(iii) Doctor may write the claim or postulate the hypothesis " the new medicine is really more effective for controlling blood pressure than old medicine." Here, we concern with the average effect of the medicines so let μ_1 and μ_2 represent the average effect of new and old medicines respectively on controlling blood pressure then our hypothesis becomes $\mu_1 > \mu_2$.
(iv) Economist may write the statement or postulate the hypothesis " the variability in incomes differ in two populations." Here, we are concerning the

Atmiya University Rajkot

variability in income so let σ_1^2 and σ_2^2 represent the variability in incomes in two populations respectively then our hypothesis becomes $\sigma_1^2 \neq \sigma_2^2$.

(v) Psychologist may write the statement or postulate the hypothesis "the proportion of literates between two groups of people is same." Here, we are concerning the proportion of literates so let P_1 and P_2 represent the proportions of literates of two groups of people respectively then our hypothesis becomes $P_1 = P_2$ or $P_1 – P_2 = 0$.

Null Hypothesis: The hypothesis which we wish to test is called as the null hypothesis. According to Prof. R.A. Fisher, "A null hypothesis is a hypothesis which is tested for possible rejection under the assumption that it is true." The hypothesis which complements to the null hypothesis is called alternative hypothesis.

The null hypothesis is a kind of hypothesis which explains the population parameter whose purpose is to test the validity of the given experimental data. This hypothesis is either rejected or not rejected based on the viability of the given population or sample. In other words, **the null hypothesis is a hypothesis in which the sample observations results from the chance.**

The alternative hypothesis has two types:

(i) Two-sided (tailed) alternative hypothesis, e.g. $H_1 : \theta \neq 60$

(ii) One-sided (tailed) alternative hypothesis, e.g. $H_1 : \theta > 60$ right-sided alternative hypothesis; $H_1 : \theta < 60$ left-sided alternative hypothesis.

Excercise: A company manufactures car tyres. The company claims that the average life of its tyres is 50000 miles. To test the claim of the company, formulate the null and alternative hypothesis.

Critical Value: Critical value is a value or values that separate the region of rejection from the non-rejection region. The region of rejection is called critical region (α).

The rejection (critical) region lies in one-tail or two-tails on the probability curve of sampling distribution of the test statistic its depends upon the al-

Atmiya University Rajkot

ternative hypothesis. Therefore, three cases arise:

Case I: If the alternative hypothesis is right-sided such as $H_1 : \mu > \mu_0$ or $H_1 : \mu_1 > \mu_2$ then the entire critical or rejection region of size α lies on right tail of the probability curve of sampling distribution of the test statistic

Case II: If the alternative hypothesis is left-sided such as $H_1 : \mu < \mu_0$ or $H_1 : \mu_1 < \mu_2$ then the entire critical or rejection region of size α lies on left tail of the probability curve of sampling distribution of the test statistic

Case III: If the alternative hypothesis is two sided such as $H_1 : \mu \neq \mu_0$ or $H_1 : \mu_1 \neq \mu_2$ then critical or rejection regions of size $\frac{\alpha}{2}$ lies on both tails of the probability curve of sampling distribution of the test statistic

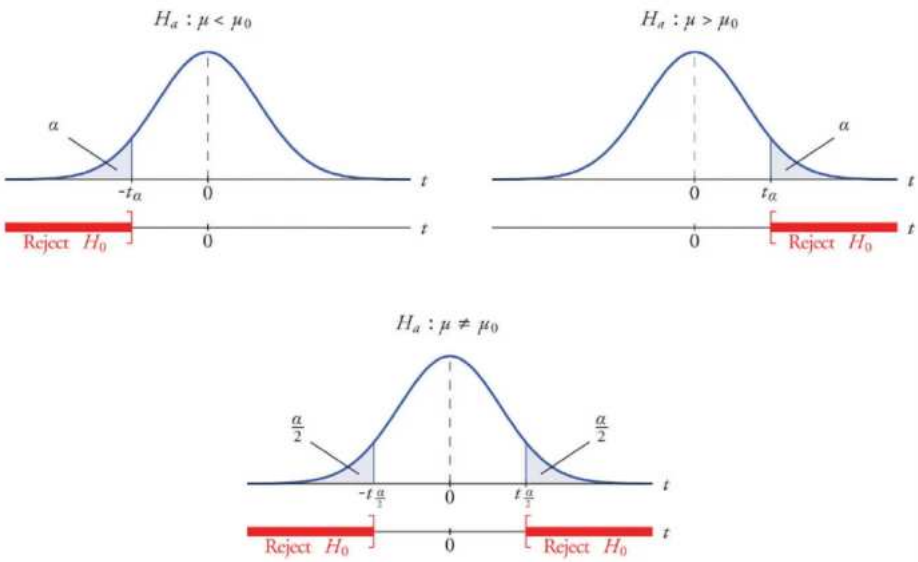

Types of Errors:

Decision	H_0 **True**	H_1 **True**(H_0 **False**)
Reject H_0	Type-I Error	Correct Decision
Do not reject H_0	Correct Decision	Type-II Error

Atmiya University Rajkot

Let us take a situation where a patient suffering from high fever reaches to a doctor. And suppose the doctor formulates the null and alternative hypotheses as

H_0: The patient is a malaria patient

H_1: The patient is not a malaria patient

Then following cases arise:

Case I: Suppose that the hypothesis H_0 is really true, that is, patient actually a malaria patient and after observation, pathological and clinical examination, the doctor rejects H_0, that is, he/she declares him/her a non-malaria-patient. It is not a correct decision and he/she commits an error in decision known as type-I error.

Case II: Suppose that the hypothesis H_0 is actually false, that is, patient actually a non-malaria patient and after observation, the doctor rejects H_0, that is, he/she declares him/her a non-malaria-patient. It is a correct decision.

Case III: Suppose that the hypothesis H_0 is really true, that is, patient actually a malaria patient and after observation, the doctor does not reject H_0, that is, he/she declares him/her a malaria-patient. It is a correct decision.

Case IV: Suppose that the hypothesis H_0 is actually false, that is, patient actually a non-malaria patient and after observation, the doctor does not reject H_0, that is, he/she declares him/her a malaria-patient. It is not a correct decision and he/she commits an error in decision known as type-II error.

Type-I Error: The decision relating to rejection of null hypothesis H0 when it is true is called type-I error. The probability of committing the type-I error is called size of test, denoted by α and is given by

$\alpha = \text{P [Reject } H_0 \text{ when } H_0 \text{ is true]} = \text{P [Reject } H_0/H_0 \text{ is true]}$

The $(1-\alpha)$ is the probability of correct decision and it correlates to the concept of $100(1-\alpha)\%$ **confidence interval** used in estimation

Type-II Error: The decision relating to non-rejection of null hypothesis H_0

Atmiya University Rajkot

when it is false (i.e. H_1 is true) is called type-II error. The probability of committing type-II error is generally denoted by β and is given by

$\beta = \text{P[Do not reject } H_0 \text{ when } H_0 \text{ is false]}$

$= \text{P[Do not reject } H_0 \text{ when } H_1 \text{ is true]}$

$= \text{P[Do not reject } H_0/H_1 \text{ is true]}$

The $(1-\beta)$ is the probability of correct decision and also known as **"power of the test"**. Since it indicates the ability or power of the test to recognize correctly that the null hypothesis is false.

Level of Significance: The probability of type-I error is known as level of significance of a test. It is also called the size of the test or size of critical region, denoted by α. Generally, it is pre-fixed as 5% or 1% level ($\alpha = 0.05 or 0.01$).

GENERAL PROCEDURE OF TESTING A HYPOTHESIS:

Step 1: First of all, we have to setup null hypothesis H_0 and alternative hypothesis H_1.

Step 2: Then decide the level of significance (α), at which we want to test our hypothesis.

Step 3: The third step is to choose an appropriate test statistic under H_0 for testing the null hypothesis as given below:

$$\text{Test statistic} = \frac{\text{Statistic-Value of the parameter under } H_0}{\text{Standard error of statistic}}$$

After that, specify the sampling distribution of the test statistic.

Step 4: Calculate the value of the test statistic.

Step 5: Obtain the critical (or cut-off) value(s) in the sampling distribution of the test statistic and construct rejection (critical) region of size α.

Step 6: After that, compare the calculated value of test statistic obtained from Step 4, with the critical value(s) obtained in Step 5, then whether it lies in rejection region or non-rejection region.

Step 7: If calculated value of test statistic lies in rejection region at α level of significance then we reject null hypothesis. If calculated value of test statistic lies in non-rejection region at α level of significance then we do not reject

Atmiya University Rajkot

null hypothesis.

Z-Test

- Let population under study has mean μ and variance σ^2, where μ is unknown and σ^2 may be known or unknown.
- Size of sample is large.
-
  - When σ^2 is known: Test statistics is

    $$Z = \frac{\bar{X} - \mu_0}{\sigma/\sqrt{n}}$$

    where $\bar{X}$ = statistics mean.
  - When σ^2 is unknown: we estimate σ^2 by the value of sample variance (S^2), where

    $$S^2 = \frac{1}{n-1}\sum_{i=1}^{n}\left(X_i - \bar{X}\right)^2$$

    Then test statistics becomes

    $$Z = \frac{\bar{X} - \mu_0}{S/\sqrt{n}}$$

Critical value for Z-test

Level of significance(α)	Two tailed test	One tailed test	
		Right-tailed	Left tailed
$\alpha = 0.05(= 5\%)$	$\pm_{\alpha/2} = \pm 1.96$	$Z_\alpha = 1.645$	$Z_\alpha = -1.645$
$\alpha = 0.01(= 1\%)$	$\pm_{\alpha/2} = \pm 2.58$	$Z_\alpha = 2.33$	$Z_\alpha = -2.33$

Atmiya University Rajkot

Example: A manufacturer of ball point pens claims that a certain pen manufactured by him has a mean writing-life at least 460 A-4 size pages. A purchasing agent selects a sample of 100 pens and put them on the test. The mean writing-life of the sample found 453 A-4 size pages with standard deviation 25 A-4 size pages. Should the purchasing agent reject the manufacturer's claim at 1% level of significance?

Solution: Here, we are given that

Specified value of population mean $= \mu_0 = 460$,

Sample size $= n = 100$,

Sample mean $= \bar{X} = 453$,

Sample standard deviation $= S = 25$

Here, we want to test the manufacturer's claim that the mean writing-life (μ) of pen is at least 460 A-4 size pages. So our claim is $\mu \geq 460$ and its complement is $\mu < 460$. Since claim contains the equality sign so we can take the claim as the null hypothesis and the complement as the alternative hypothesis. So

$H_0 : \mu \geq \mu_0 = 460$ and $H_1 : \mu < 460$

Also the alternative hypothesis is left-tailed so the test is left-tailed test. Since sample size is $n = 100 (n > 30)$ large so we go for Z-test. The test statistic of Z-test is given by

$$\begin{aligned} Z &= \frac{\bar{X} - \mu_0}{S/\sqrt{n}} \\ &= \frac{453 - 460}{25/\sqrt{100}} = \frac{-7}{2.5} = -2.8 \end{aligned}$$

The critical (tabulated) value for left-tailed Z test at 1% level of significance is $z_\alpha = -2.33$.

Since calculated value of test statistic $Z (= -2.8)$ is less than the critical value $(= -2.33)$, that means calculated value of test statistic Z lies in rejection region, so we reject the null hypothesis. Since the null hypothesis is the claim so we reject the manufacturer's claim at 1% level of significance.

Atmiya University Rajkot

Decision according to p-value:
The test is left-tailed, therefore,

$$\text{p-value} = P[Z \leq z] = P[Z \leq -2.8] = P[Z \geq 2.8] \qquad [\because \text{Z is symmetrical about z=0 line}]$$
$$= 0.5 - P[0 \leq Z \leq 2.8] = 0.5 - 0.4974 = 0.0026$$

Since p-value ($= 0.0026$) is less than $\alpha (= 0.01)$ so we reject the null hypothesis at 1% level of significance.
Therefore, we conclude that the sample provide us sufficient evidence against the claim so the purchasing agent rejects the manufacturer's claim at 1% level of significance.
Exercise: A sample of 900 bolts has a mean length 3.4 cm. Is the sample regarded to be taken from a large population of bolts with mean length 3.25 cm and standard deviation 2.61 cm at 5% level of significance?
Ans: Two tailed test; $\pm z_{\alpha/2} = \pm 1.96$; do not reject the null hypothesis.
Que A big company uses thousands of CFL lights every year. The brand that the company has been using in the past has average life of 1200 hours. A new brand is offered to the company at a price lower than they are paying for the old brand. Consequently, a sample of 100 CFL light of new brand Sample Tests is tested which yields an average life of 1220 hours with standard deviation 90 hours. Should the company accept the new brand at 5% level of significance?
Ans: Right-tailed test; $z_\alpha = z_{0.05} = 1.645$; reject null hypothesis.

t-Test

Assumptions: (i) The characteristic under study follows the normal distribution.
(ii) Sample observations are random and independent.
(iii) Population variance σ^2 is unknown.
(iv) Random sample size is small ($n < 30$).

Atmiya University Rajkot

(v) degree of freedom is $n-1$.

For testing the null hypothesis, the test statistic t is given by:

$$t = \frac{\bar{X} - \mu_0}{S/\sqrt{n}}$$

where $\bar{X} = \frac{1}{n}\sum_{i=1}^{n} X_i$ is the sample mean, $S^2 = \frac{1}{n-1}\sum_{i=1}^{n}(X_i - \bar{X})^2$ is the sample variance and μ_0 is value of parameter under H_0.

Example: A manufacturer claims that a special type of projector bulb has an average life 160 hours. To check this claim an investigator takes a sample of 20 such bulbs, puts on the test, and obtains an average life 167 hours with standard deviation 16 hours. Assuming that the life time of such bulbs follows normal distribution, does the investigator accept the manufacturer's claim at 5% level of significance?

Solution: Here, we are given that

$\mu_0 = 160, n = 20, \bar{X} = 167$ and $S = 16$

Here, we want to test the manufacturer claims that a special type of projector bulb has an average life (μ) 160 hours. So claim is $\mu = 160$ and its complement is $\mu \neq 160$. Since the claim contains the equality sign so we can take the claim as the null hypothesis and complement as the alternative hypothesis. Thus,

$H_0 : \mu = \mu_0 = 160$ and $H_1 : \mu \neq 160$

Since the alternative hypothesis is two-tailed so the test is two-tailed test.

Here, we want to test the hypothesis regarding population mean when population SD is unknown. Also, sample size is small $n = 20 (n < 30)$ and population under study is normal, so we can go for t-test for testing the hypothesis about population mean.

For testing the null hypothesis, the test statistic t is given by

$$\begin{aligned} t &= \frac{\bar{X} - \mu_0}{S/\sqrt{n}} \\ &= \frac{167 - 160}{16/\sqrt{20}} = \frac{7}{3.58} = 1.96. \end{aligned}$$

Atmiya University Rajkot

The critical (tabulated) values of test statistic for two-tailed test corresponding (n-1) = 19 degree of freedom at 5% level of significance are $\pm t_{(n-1),\alpha/2} = \pm t_{(19),0.025} = \pm 2.093$.

Since calculated value of test statistic t (= 1.96) is greater than the critical value (= −2.093) and is less than critical value (= 2.093), that means calculated value of test statistic lies in non-rejection region. So we do not reject the null hypothesis i.e. we support the manufacture's claim at 5% level of significance.

Since calculated value of test statistic t is based on 19 df therefore, we use row for 19 df in the t-table and move across this row to find the values in which calculated t-value falls. Since calculated t-value falls between 1.729 and 2.093 corresponding to one-tailed area $\alpha = 0.05$ and 0.025 respectively therefore p-value lies between 0.025 and 0.05, that is,

$0.025 < p - value < 0.05$

Since test is two-tailed so

$2 \times 0.025 = 0.05 < p - value < 0.10 = 0.05 \times 2$

Since p-value is greater than $\alpha(= 0.05)$ so we do not reject the null hypothesis at 5% level of significance.

Thus, we conclude that sample fails to provide us sufficient evidence against the null hypothesis so we may assume that the manufacture's claim is true so the investigator may accept the manufacturer's claim at 5% level of significance.

p-value:

For one-tailed test:

For $H_1 : \mu > \mu_0$ (right-tailed test)

p-value = $P[t \geq t_{cal}]$

For $H_1 : \mu < \mu_0$ (left-tailed test)

p-value = $P[t \leq t_{cal}]$

For two-tailed test: For $H_1 : \mu \neq \mu_0$

p-value=$2P[t \geq |t_{cal}|]$

Atmiya University Rajkot

Ex: A tyre manufacturer claims that the average life of a particular category of his tyre is 18000 km when used under normal driving conditions. A random sample of 16 tyres was tested. The mean and SD of life of the tyres in the sample were 20000 km and 6000 km respectively. Assuming that the life of the tyres is normally distributed, test the claim of the manufacturer at 1% level of significance using appropriate test.
Ans: Two tailed test; $\pm t_{(15),0.005} = \pm 2.947$.; do not reject null hypothesis.

F-test

The assumptions for F-test for testing the variances of two populations are:
1. The populations from which the samples are drawn must be normally distributed.
2. The samples must be independent of each other.
Note: Values of F-distribution ranges from 0 to ∞
Two random samples of size n_1, n_2 are selected with mean μ_1, μ_2 and Variance σ_1^2, σ_2^2, respectively.
Hypothesis are:
$H_0 : \sigma_1^2 = \sigma_2^2 = \sigma^2$ and $H_1 : \sigma_1^2 \neq \sigma_2^2$ for two-tailed test
$H_0 : \sigma_1^2 \leq \sigma_2^2$ and $H_1 = \sigma_1^2 > \sigma_2^2$
$H_0 : \sigma_1^2 \geq \sigma_2^2$ and $H_1 = \sigma_1^2 < \sigma_2^2$ [for one-tailed test]
Test statistics F is given by

$$F = \frac{S_1^2}{S_2^2} = F_{(n_1-1,n_2-1)} \quad \text{under } H_0$$

where $S_1^2 = \frac{1}{n_1-1} \sum \left(X - \bar{X}\right)^2$ and $S_2^2 = \frac{1}{n_2-1} \sum \left(Y - \bar{Y}\right)^2$.
Rejection or non-rejection region:

Atmiya University Rajkot

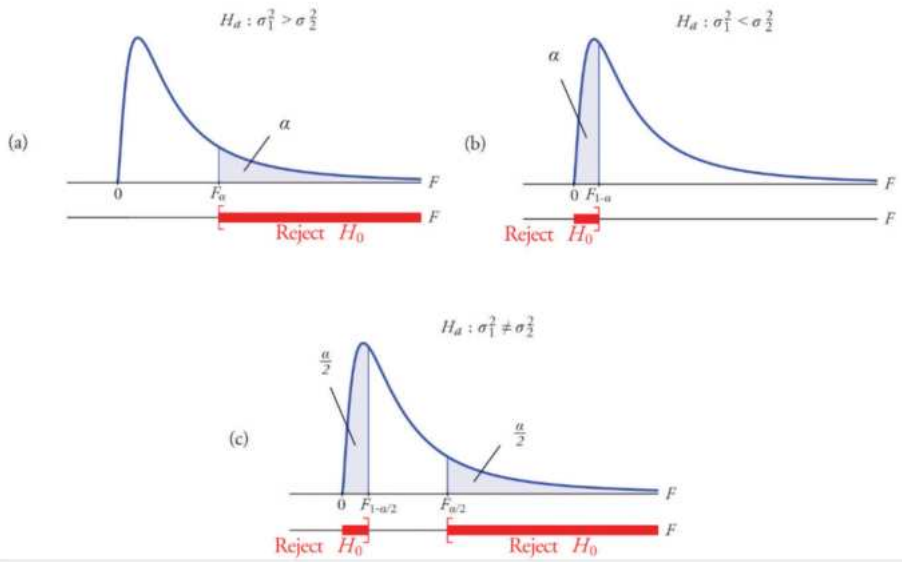

Ex: The following data relate to the number of items produced in a square and F-Tests shift by two workers A and B for some days:

A	26	37	40	35	30	30	40	26	30	35	45
B	19	22	24	27	24	18	20	19	25		

Assuming that the parent populations are normal, can it be inferred that B is more stable (or consistent) worker compared to A?

Solution: Here, we want to test that worker B is more stable than worker A. As we know that stability of data is related to variance of the data. Smaller value of the variance implies data that it is more stable. Therefore, to compare stability of two workers, it is enough to compare their variances. If σ_1^2 and σ_2^2 denote the variances of worker A and worker B respectively then our claim is $\sigma_1^2 > \sigma_2^2$ and its complement is $\sigma_1^2 \leq \sigma_2^2$. Since complement contains the equality sign so we can take the complement as the null hypothesis and the claim as the alternative hypothesis. Thus,

Atmiya University Rajkot

$H_0 : \sigma_1^2 \leq \sigma_2^2$

$H_1 : \sigma_1^2 > \sigma_2^2$[worker B is more stable than worker A]

SInce the alternative hypothesis is right tailed test.

Here, $n_1 = 11(< 30)$ and $n_2 = 9(< 30)$.

Test statistics is:

$$F = \frac{S_1^2}{S_2^2} \sim F_{(n_1-1, n_2-1)}$$

where $S_1^2 = \frac{1}{n_1-1}\sum_{i=1}^{n_1}(X_i - \bar{X})^2$ and $S_2^2 = \frac{1}{n_2-1}\sum_{i=1}^{n_2}(Y_i - \bar{Y})^2$.

Calculation for S_1^2 and S_2^2: Therefore, we have $\bar{X} = 34; \bar{Y} = 22; S_1^2 = 38; S_2^2 =$

Item produced by A (X)	$(X - \bar{X})$	$(X - \bar{X})^2$	Item by B(Y)	$(Y - \bar{Y})$	$(Y - \bar{Y})^2$
$\vdots$	$\vdots$	$\vdots$	$\vdots$	$\vdots$	$\vdots$
Total=374	0	380	198	0	80

10.

Thus, $F = \frac{38}{10} = 3.8$

The critical tabulated value of test statistics F for right tailed test corresponding to (10,8) degree of freedom at 1% level of significance is $F_{(10,8),0.01} = 5.81$ Since calculated value of test statistic (= 3.8) is less than the critical value (= 5.81), that means calculated value of test statistic lies in rejection region, so we do not reject the null hypothesis and reject the alternative hypothesis i.e. we reject the claim at 1% level of significance. Thus, we conclude that samples provide us sufficient evidence against the claim so worker B is not more stable (or consistent) worker compared to A.

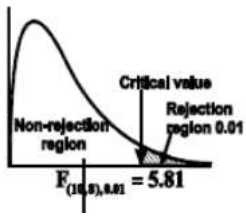

Atmiya University Rajkot

EX Two sources of raw materials are under consideration by a bulb manufacturing company. Both sources seem to have similar characteristics but the company is not sure about their respective uniformity. A sample of 12 lots from source A yields a variance of 125 and a sample of 10 lots from source B yields a variance of 112. Is it likely that the variance of source A significantly differs from the variance of source B at significance level $\alpha = 0.01$? ($F_{(11,9),0.025} = 3.91$; $F_{(11,9),(1-\alpha/2)} = \frac{1}{F_{(9,11),\cancel{0.025}}} = 0.28$)

$\alpha/2$

χ^2-test

A chi-square test is a statistical test that is used to compare observed and expected results. The goal of this test is to identify whether a disparity between actual and predicted data is due to chance or to a link between the variables under consideration.

A very small chi-square test statistic indicates a high correlation between the observed and expected values. Therefore, the sample data is a good fit for what would be expected in the general population.
A very large chi-square test statistic means that the sample data (observed values) does not fit the population data (expected values) very well. In other words, there isn't a relationship.
Points to remember:
(i) Total area under curve is 1.
(ii) degree of freedom =(no. of rows-1)(no. of columns-1)
(iii) Mean =degree of freedom, variance =2 degree of freedom.
(iv) Curve lie between 0 to ∞
(v) Frequency should be large (> 50).
(vi) $\sum f_o = \sum f_e$
(vii) f_e should not be less than 5.

Formula:

Atmiya University Rajkot

$$\chi^2 = \frac{\sum(X_i - \bar{X})^2}{\sigma_0^2} = \frac{(n-1)S^2}{\sigma_0^2} \sim \chi^2_{(n-1)}$$
$$\chi^2 = \sum \frac{(O-E)^2}{E}$$

where $\chi^2$is test statistics, $S^2 = \frac{1}{n-1}\sum(X_i - \bar{X})^2$ O= observed frequencies, E=Expected frequencies.

Expected value=(row total)(column Total)/Total number of observations

The decision about rejection and non-rejection region:

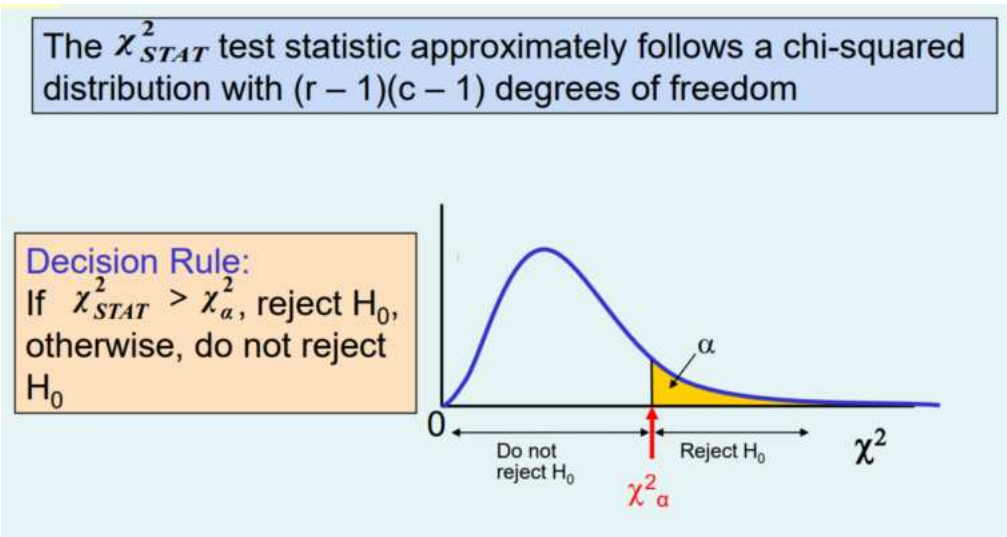

There are two main types of Chi-Square tests namely -

1. Independence: The Chi-Square test of independence is used to determine if there is a significant relationship between two nominal (categorical) variables. The frequency of each category for one nominal variable is compared across the categories of the second nominal variable.

Hypothesis:

Null Hypothesis: Assumes that there is no association between the two variables.

Alternative Hypothesis: Assumes that there is an association between the two variables.

Atmiya University Rajkot

2. **Goodness-of-Fit:** Chi-Square goodness of fit test is a non-parametric test that is used to find out how the observed value of a given phenomena is significantly different from the expected value. In Chi-Square goodness of fit test, the term goodness of fit is used to compare the observed sample distribution with the expected probability distribution.

Procedure for Chi-Square Goodness of Fit Test:
Set up the hypothesis for Chi-Square goodness of fit test:
A. **Null hypothesis:** In Chi-Square goodness of fit test, the null hypothesis assumes that there is no significant difference between the observed and the expected value.
B. **Alternative hypothesis:** In Chi-Square goodness of fit test, the alternative hypothesis assumes that there is a significant difference between the observed and the expected value.

Atmiya University Rajkot

Example 2

Three unbiased coins are tossed. Find the probability of getting (i) exactly two heads, (ii) at least one tail, (iii) at most two heads, (iv) a head on the second coin, and (v) exactly two heads in succession.

Solution

When three coins are tossed, the sample space S is given by

$$S = \{HHH, HTH, THH, HHT, TTT, THT, TTH, HTT\}$$

$$n(s) = 8$$

(i) Let A be the event of getting exactly two heads.

$$A = \{HTH, THH, HHT\}$$

$$n(A) = 3$$

$$P(A) = \frac{n(A)}{n(S)} = \frac{3}{8}$$

(ii) Let B be the event of getting at least one tail.

$$B = \{HTH, THH, HHT, TTT, THT, TTH, HTT\}$$

$$n(B) = 7$$

$$P(B) = \frac{n(B)}{n(S)} = \frac{7}{8}$$

(iii) Let C be the event of getting at most two heads.

$$C = \{HTH, THH, HHT, TTT, THT, TTH, HTT\}$$

$$n(C) = 7$$

$$P(C) = \frac{n(C)}{n(S)} = \frac{7}{8}$$

(iv) Let D be the event of getting a head on the second coin.

$$D = \{HHH, THH, HHT, THT\}$$

$$n(D) = 4$$

$$P(D) = \frac{n(D)}{n(S)} = \frac{4}{8} = \frac{1}{2}$$

Atmiya University Rajkot

Scanned with OKEN Scanner

(v) Let E be the event of getting two heads in succession.

$$E = \{HHH, THH, HHT\}$$

$$n(E) = 3$$

$$P(E) = \frac{n(E)}{n(S)} = \frac{3}{8}$$

Example 3

S *A fair die is thrown. Find the probability of getting (i) an even number, (ii) a perfect square, and (iii) an integer greater than or equal to 3.*

Solution

When a die is thrown, the sample space S is given by

$$S = \{1, 2, 3, 4, 5, 6\}$$

$$n(S) = 6$$

(i) Let A be the event of getting an even number.

$$A = \{2, 4, 6\}$$

$$n(A) = 3$$

$$P(A) = \frac{n(A)}{n(S)} = \frac{3}{6} = \frac{1}{2}$$

(ii) Let B be the event of getting a perfect square.

$$B = \{1, 4\}$$

$$n(B) = 2$$

$$P(B) = \frac{n(B)}{n(S)} = \frac{2}{6} = \frac{1}{3}$$

(iii) Let C be the event of getting an integer greater than or equal to 3.

$$C = \{3, 4, 5, 6\}$$

$$n(C) = 4$$

$$P(C) = \frac{n(C)}{n(S)} = \frac{4}{6} = \frac{2}{3}$$

Example 4

4+ S *A card is drawn from a well-shuffled pack of 52 cards. Find the probability of (i) getting a king card, (ii) getting a face card, (iii) getting a red card, (iv) getting a card between 2 and 7, both inclusive, and (v) getting a card between 2 and 8, both exclusive.*

Scanned with OKEN Scanner

Solution

Total number of cards = 52

One card out of 52 cards can be drawn in ways.

$$n(S) = {}^{52}C_1 = 52$$

(i) Let A be the event of getting a king card. There are 4 king cards and one of them can be drawn in ${}^{4}C_1$ ways.

$$n(A) = {}^{4}C_1 = 4$$

$$P(A) = \frac{n(A)}{n(S)} = \frac{4}{52} = \frac{1}{13}$$

(ii) Let B be the event of getting a face card. There are 12 face cards and one of them can be drawn in ${}^{12}C_1$ ways.

$$n(B) = {}^{12}C_1 = 12$$

$$P(B) = \frac{n(B)}{n(S)} = \frac{12}{52} = \frac{3}{13}$$

(iii) Let C be the event of getting a red card. There are 26 red cards and one of them can be drawn in ${}^{26}C_1$ ways.

$$n(C) = {}^{26}C_1 = 26$$

$$P(C) = \frac{n(C)}{n(S)} = \frac{26}{52} = \frac{1}{2}$$

(iv) Let D be the event of getting a card between 2 and 7, both inclusive. There are 6 such cards in each suit giving a total of $6 \times 4 = 24$ cards. One of them can be drawn in ${}^{24}C_1$ ways.

$$n(D) = {}^{24}C_1 = 24$$

$$P(D) = \frac{n(D)}{n(S)} = \frac{24}{52} = \frac{6}{13}$$

(v) Let E be the event of getting a card between 2 and 8, both exclusive. There are 5 such cards in each suit giving a total of $5 \times 4 = 20$ cards. One of them can be drawn in ${}^{20}C_1$ ways.

$$n(E) = {}^{20}C_1 = 20$$

$$= \frac{n(E)}{n(S)} = \frac{20}{52} = \frac{5}{13}$$

Example 5

A bag contains 2 black, 3 red, and 5 blue balls. Three balls are drawn at random. Find the probability that the three balls drawn (i) are blue (ii) consist of 2 blue and 1 red ball, and (iii) consist of exactly one black ball.

Saurashtra University Rajkot

Scanned with OKEN Scanner

Solution

Total number of balls = 10

3 balls out of 10 balls can be drawn in ${}^{10}C_3$ ways.

$$n(S) = {}^{10}C_3 = 120$$

(i) Let A be the event that the three balls drawn are blue. 3 blue balls out of 5 blue balls can be drawn in ${}^{5}C_3$ ways.

$$n(A) = {}^{5}C_3 = 10$$

$$P(A) = \frac{n(A)}{n(S)} = \frac{10}{120} = \frac{1}{12}$$

(ii) Let B be the event that the three balls drawn consist of 2 blue and 1 red ball. 2 blue balls out of 5 blue balls can be drawn in ${}^{5}C_2$ ways. 1 red ball out of 3 red balls can be drawn in ${}^{3}C_1$ ways.

$$n(B) = {}^{5}C_2 \times {}^{3}C_1 = 30$$

$$P(B) = \frac{n(B)}{n(S)} = \frac{30}{120} = \frac{1}{4}$$

(iii) Let C be the event that three balls drawn consist of exactly one black ball, i.e., remaining two balls can be drawn from 3 red and 5 blue balls. One black ball can be drawn from 2 black balls in ${}^{2}C_1$ ways and the remaining 2 balls can be drawn from 8 balls in ${}^{8}C_2$ ways.

$$n(C) = {}^{2}C_1 \times {}^{8}C_2 = 56$$

$$P(C) = \frac{n(C)}{n(S)} = \frac{56}{120} = \frac{7}{15}$$

Example 6

A class consists of 6 girls and 10 boys. If a committee of three is chosen at random from the class, find the probability that (i) three boys are selected, and (ii) exactly two girls are selected.

Solution

Total number of students = 16

A committee of 3 students from 16 students can be selected in ${}^{16}C_3$ ways.

$$n(S) = {}^{16}C_3 = 560$$

(i) Let A be the event that 3 boys are selected.

$$n(A) = {}^{10}C_3 = 120$$

$$P(A) = \frac{n(A)}{n(S)} = \frac{120}{560} = \frac{3}{14}$$

Atmiya University Rajkot

Scanned with OKEN Scanner

(ii) Let B be the event that exactly 2 girls are selected. 2 girls from 6 girls can be selected in ${}^6C_2$ ways and one boy from 10 boys can be selected in ${}^{10}C_1$ ways.

$$n(B) = {}^6C_2 \times {}^{10}C_1 = 150$$

$$P(B) = \frac{n(B)}{n(S)} = \frac{150}{560} = \frac{15}{16}$$

Example 7

From a collection of 10 bulbs, of which 4 are defective, 3 bulbs are selected at random and fitted into lamps. Find the probability that (i) all three bulbs glow, and (ii) the room is lit.

Solution

Total number of bulbs = 10

3 bulbs can be selected from 10 bulbs in ${}^{10}C_3$ ways.

$$n(S) = {}^{10}C_3 = 120$$

(i) Let A be event that all three bulbs glow. This event will occur when 3 bulbs are selected from 6 nondefective bulbs in ${}^6C_3$ ways.

$$n(A) = {}^6C_3 = 20$$

$$P(A) = \frac{n(A)}{n(S)} = \frac{20}{120} = \frac{1}{6}$$

(ii) Let B be the event that the room is lit. Let $\overline{B}$ be the event that the room is dark. The event $\overline{B}$ will occur when 3 bulbs are selected from 4 defective bulbs in ${}^4C_3$ ways.

$$n(\overline{B}) = {}^4C_3 = 4$$

$$P(\overline{B}) = \frac{n(\overline{B})}{n(S)} = \frac{4}{120} = \frac{1}{30}$$

$$\therefore \quad P(B) = 1 - P(\overline{B}) = 1 - \frac{1}{30} = \frac{29}{30}$$

Atmiya University Rajkot

Scanned with OKEN Scanner

2. An unbiased coin is tossed twice. Find the probability of (i) exactly one head, (ii) at most one head, (iii) at least one head, and (iv) same face on both the coins.

[**Ans.:** (i) $\frac{1}{2}$ (ii) $\frac{3}{4}$ (iii) $\frac{3}{4}$ (iv) $\frac{1}{2}$]

3. A fair dice is thrown thrice. Find the probability that the sum of the numbers obtained is 10.

[**Ans.:** $\frac{1}{8}$]

4. A ball is drawn at random from a box containing 12 red, 18 white, 19 blue, and 15 orange balls. Find the probability that (i) it is red or blue, and (ii) it is white, blue, or orange.

[**Ans.:** (i) $\frac{2}{5}$ (ii) $\frac{43}{55}$]

5. Eight boys and three girls are to sit in a row for a photograph. Find the probability that no two girls are together.

[**Ans.:** $\frac{28}{55}$]

6. If four persons are chosen from a group of 3 men, 2 women, and 4 children, find the probability that exactly two of them will be children.

[**Ans.:** $\frac{10}{21}$]

7. A box contains 2 white, 3 red, and 5 black balls. Three balls are drawn at random. What is the probability that they will be of different colours?

[**Ans.:** $\frac{1}{4}$]

8. Two cards are drawn from a well-shuffled pack of 52 cards. Find the probability of getting (i) 2 king cards, (ii) 1 king card and 1 queen card, and (iii) 1 king card and 1 spade card.

Atmiya University Rajkot

[**Ans.:** (i) $\frac{1}{221}$ (ii) $\frac{8}{663}$ (iii) $\frac{1}{26}$]

Scanned with OKEN Scanner

Example 1

A fair die is tossed once. If the random variable is getting an even number, find the probability distribution of X.

Solution

When a fair die is tossed,

$$S = \{1, 2, 3, 4, 5, 6\}$$

Let X be the random variable of getting an even number. Hence, X can take the values 0 and 1.

Atmiya University Rajkot

$$P(X = 0) = P(1, 3, 5) = \frac{3}{6} = \frac{1}{2}$$

$$P(X = 1) = P(2, 4, 6) = \frac{3}{6} = \frac{1}{2}$$

Hence, the probability distribution of X is

$X = x$	0	1
$P(X = 1)$	$\frac{1}{2}$	$\frac{1}{2}$

Also, $\sum P(X = x) = \frac{1}{2} + \frac{1}{2} = 1$

Example 2

Find the probability distribution of the number of heads when three coins are tossed.

Solution

When three coins are tossed,

$$S = \{\text{HHH, HHT, HTH, THH, HTT, THT, TTH, TTT}\}$$

Let X be the random variable of getting heads in tossing of three coins. Hence X can take the values 0, 1, 2, 3.

$$P(X = 0) = P(\text{no head}) = P(\text{TTT}) = \frac{1}{8}$$

$$P(X = 1) = P(\text{one head}) = P(\text{HTT, THT, TTH}) = \frac{3}{8}$$

$$P(X = 2) = P(\text{two heads}) = P(\text{HHT, THH, HTH}) = \frac{3}{8}$$

$$P(X = 3) = P(\text{three heads}) = P(\text{HHH}) = \frac{1}{8}$$

Hence, the probability distribution of X is

$X = x$	0	1	2	3
$P(X = x)$	$\frac{1}{8}$	$\frac{3}{8}$	$\frac{3}{8}$	$\frac{1}{8}$

Also, $\sum P(X = x) = \frac{1}{8} + \frac{3}{8} + \frac{3}{8} + \frac{1}{8} = 1$

Aaniya University Rajkot

Example 3

State with reasons whether the following represent the probability mass function of a random variable:

(i)

$X = x$	0	1	2	3
$P(X = x)$	0.4	0.3	0.2	0.1

(ii)

$X = x$	0	1	2	3
$P(X = x)$	$\frac{1}{2}$	$\frac{1}{3}$	$\frac{1}{6}$	$\frac{1}{4}$

(iii)

$X = x$	0	1	2	3
$P(X = x)$	$-\frac{1}{2}$	$\frac{1}{2}$	$\frac{1}{4}$	$\frac{3}{4}$

Solution

(i) Here, $0 \le P(X = x) \le 1$ is satisfied for all values of X.

$$\sum P(X = x) = P(X = 0) + P(X = 1) + P(X = 2) + P(X = 3)$$
$$= 0.4 + 0.3 + 0.2 + 0.1$$
$$= 1$$

Since $\sum P(X = x) = 1$, it represents probability mass function.

(ii) Here, $0 \le P(X = x) \le 1$ is satisfied for all values of X.

$$\sum P(X = x) = P(X = 0) + P(X = 1) + P(X = 2) + P(X = 3)$$
$$= \frac{1}{2} + \frac{1}{3} + \frac{1}{6} + \frac{1}{4}$$
$$= \frac{5}{4} > 1$$

Since $\sum (P(X = x) > 1$, it does not represent a probability mass function.

(iii) Here, $0 \le P(X = x) \le 1$ is not satisfied for all the values of X as $P(X = 0) = -\frac{1}{2}$.

Hence, $P(X = x)$ does not represent a probability mass function.

Atmiya University Rajkot

Example 4

Verify whether the following functions can be regarded as the probability mass function for the given values of X:

(i) $P(X = x) = \frac{1}{5}$ *for* $x = 0, 1, 2, 3, 4$

$= 0$ *for otherwise*

(ii) $P(X = x) = \frac{x-2}{5}$ *for* $x = 1, 2, 3, 4, 5$

$= 0$ *for otherwise*

(iii) $P(X = x) = \frac{x^2}{30}$ *for* $x = 0, 1, 2, 3, 4$

$= 0$ *for otherwise*

Solution

(i) $P(X = 0) = P(X = 1) = P(X = 2) = P(X = 3) = P(X = 4) = \frac{1}{5}$

$P(X = x) \geq 0$ for all values of x

$$\sum P(X = x) = P(X = 0) + P(X = 1) + P(X = 2) + P(X = 3) + P(X = 4)$$

$$= \frac{1}{5} + \frac{1}{5} + \frac{1}{5} + \frac{1}{5} + \frac{1}{5}$$

$$= 1$$

Hence, $P(X = x)$ is a probability mass function.

(ii) $P(X = 1) = \frac{1-2}{5} = -\frac{1}{5} < 0$

Hence, $P(X = x)$ is not a probability mass function.

(iii) $P(X = 0) = 0$

$P(X = 1) = \frac{1}{30}$

$P(X = 2) = \frac{4}{30}$

$P(X = 3) = \frac{9}{30}$

$P(X = 4) = \frac{16}{30}$

$P(X = x) \geq 0$ for all values of x

Atmiya University Rajkot

$$\sum P(X = x) = P(X = 0) + P(X = 1) + P(X = 2) + P(X = 3) + P(X = 4)$$
$$= 0 + \frac{1}{30} + \frac{4}{30} + \frac{9}{30} + \frac{16}{30}$$
$$= 1$$

Hence, $P(X = x)$ is a probability mass function.

Example 5

A random variable X has the probability mass function given by

X	1	2	3	4
$P(X = x)$	0.1	0.2	0.5	0.2

Find (i) $P(2 \le x < 4)$, (ii) $P(X > 2)$, (iii) $P(X$ is odd), and (iv) $P(X$ is even).

Solution

(i) $P(2 \le X < 4) = P(X = 2) + P(X = 3)$
$= 0.2 + 0.5$
$= 0.7$

(ii) $P(X > 2) = P(X = 3) + P(X = 4)$
$= 0.5 + 0.2$
$= 0.7$

(iii) $P(X \text{ is odd}) = P(X = 1) + P(X = 3)$
$= 0.1 + 0.5$
$= 0.6$

(iv) $P(X \text{ is even}) = P(X = 2) + P(X = 4)$
$= 0.2 + 0.2$
$= 0.4$

Example 6

If the random variable X takes the value 1, 2, 3, and 4 such that $2P(X = 1) = 3P(X = 2) = P(X = 3) = 5P(X = 4)$. Find the probability distribution.

Solution

Atmiya University Rajkot

Let $2P(X = 1) = 3P(X = 2) = P(X = 3) = 5P(X = 4) = k$

$$P(X = 1) = \frac{k}{2}$$

$$P(X = 2) = \frac{k}{3}$$

$$P(X = 3) = k$$

$$P(X = 4) = \frac{k}{5}$$

Since $\sum(P(X = x) = 1$,

$$\frac{k}{2} + \frac{k}{3} + k + \frac{k}{5} = 1$$

$$k = \frac{30}{61}$$

Hence, the probability distribution is

X	1	2	3	4
$P(X = x)$	$\frac{15}{61}$	$\frac{10}{61}$	$\frac{30}{61}$	$\frac{6}{61}$

Example 7

A random variable X has the following probability distribution:

X	0	1	2	3	4	5	6	7
$P(X = x)$	a	$4a$	$3a$	$7a$	$8a$	$10a$	$6a$	$9a$

(i) Find the value of a.

(ii) Find $P(X < 3)$.

(iii) Find the smallest value of m for which $P(X \le m) \ge 0.6$.

Solution

(i) Since $P(X = x)$ is a probability distribution function,

$$\sum(P(X = x) = 1$$

$$P(X = 0) + P(X = 1) + P(X = 2) + P(X = 3) + P(X = 4) + P(X = 5) + P(X = 6) + P(X = 7) = 1$$

$$a + 4a + 3a + 7a + 8a + 10a + 6a + 9a = 1$$

$$a = \frac{1}{48}$$

(ii) $P(X < 3) = P(X = 0) + P(X = 1) + P(X = 2)$

$$= a + 4a + 3a$$

$$= 8a$$

$$= 8\left(\frac{1}{48}\right)$$

$$= \frac{1}{6}$$

Atmiya University Rajkot

Example 9

From a lot of 10 items containing 3 defectives, a sample of 4 items is drawn at random. Let the random variable X denote the number of defective items in the sample. Find the probability distribution of X.

Solution

The random variable X can take the value 0, 1, 2, or 3.

Total number of items = 10

Number of good items = 7

Number of defective items = 3

$$P(X = 0) = P(\text{no defective}) = \frac{{}^{7}C_4}{{}^{10}C_4} = \frac{1}{6}$$

$$P(X = 1) = P(\text{one defective and three good items}) = \frac{{}^{3}C_1\ {}^{7}C_3}{{}^{10}C_4} = \frac{1}{2}$$

$$P(X = 2) = P(\text{two defectives and two good items}) = \frac{{}^{3}C_2\ {}^{7}C_2}{{}^{10}C_4} = \frac{3}{10}$$

$$P(X = 3) = P(\text{three defectives and one good item}) = \frac{{}^{3}C_3\ {}^{7}C_1}{{}^{10}C_4} = \frac{1}{30}$$

Hence, the probability distribution of the random variable is

X	0	1	2	3
$P(X = x)$	$\frac{1}{6}$	$\frac{1}{2}$	$\frac{3}{10}$	$\frac{1}{30}$

Atmiya University Rajkot

1. Verify whether the following functions can be considered as probability mass functions:

(i) $P(X = x) = \dfrac{x^2 + 1}{18}, x = 0, 1, 2, 3$ [Ans.: Yes)

(ii) $P(X = x) = \dfrac{x^2 - 2}{8}, x = 1, 2, 3$ [Ans.: No]

(iii) $P(X = x) = \dfrac{2x + 1}{18}, x = 0, 1, 2, 3$ [Ans.: No]

2. The probability density function of a random variable X is

X	0	1	2	3	4	5	6
$P(X = x)$	k	$3k$	$5k$	$7k$	$9k$	$11k$	$13k$

Find $P(X < 4)$ and $P(3 < X \leq 6)$.

$\left[\text{Ans.: } \dfrac{16}{49}, \dfrac{33}{49}\right]$

3. A random variable X has the following probability distribution:

X	1	2	3	4	5	6	7
$P(X = x)$	k	$2k$	$3k$	k^2	$k^2 + k$	$2k^2$	$4k^2$

Find (i) k, (ii) $P(X < 5)$, (iii) $P(X > 5)$, and (iv) $P(0 \leq X \leq 5)$

$\left[\text{Ans.: } \dfrac{1}{8} \text{ (ii) } \dfrac{49}{64} \text{ (iii) } \dfrac{3}{32} \text{ (iv) } \dfrac{29}{32}\right]$

Atmiya University Rajkot

10. Two dice are rolled at once. Find the probability distribution of the sum of the numbers on them.

Ans.:

X	2	3	4	5	6	7	8	9	10	11	12
$P(X = x)$	$\frac{1}{36}$	$\frac{2}{36}$	$\frac{3}{36}$	$\frac{4}{36}$	$\frac{5}{36}$	$\frac{6}{36}$	$\frac{5}{36}$	$\frac{4}{36}$	$\frac{3}{36}$	$\frac{2}{36}$	$\frac{1}{36}$

11. A random variable X takes three values 0, 1, and 2 with probabilities $\frac{1}{3}, \frac{1}{6}$, and $\frac{1}{2}$ respectively. Obtain the distribution function of X.

[**Ans.:** $F(0) = \frac{1}{3}, F(1) = \frac{1}{2}, F(2) = 1$]

12. A random variable X has the following probability function:

x	0	1	2	3	4
$P(X = x)$	k	$3k$	$5k$	$7k$	$9k$

Find (i) the value of k, (ii) $P(X < 3)$, $P(X \geq 3)$, $P(0 < X < 4)$, and (iii) distribution function of X.

[**Ans.:** (i) $\frac{1}{25}$, (ii) $\frac{9}{25}, \frac{16}{25}, \frac{3}{5}$

(iii) $F(0) = \frac{1}{25}, F(1) = \frac{4}{25}. F(2) = \frac{9}{25}, F(3) = \frac{16}{25}, F(4) = 1$]

13. A random variable X has the probability function

X	−2	−1	0	1	2	3
$P(X = x)$	0.1	k	0.2	$2k$	0.3	k

Find (i) k, (ii) $P(X \leq 1)$, (iii) $P(-2 < X < 1)$, and (iv) obtain the distribution function of X.

[**Ans.:** (i) 0.1 (ii) 0.6 (iii) 0.3]

14. The following is the distribution function $F(x)$ of a discrete random variable X:

Atmiya University Rajkot

Example 1

The mean and standard deviation of a binomial distribution are 5 and 2. Determine the distribution.

Solution

$$\mu = np = 5$$

$$\text{SD} = \sqrt{npq} = 2$$

$$npq = 4$$

$$\frac{npq}{np} = \frac{4}{5}$$

$$\therefore \quad q = \frac{4}{5}$$

$$p = 1 - q = 1 - \frac{4}{5} = \frac{1}{5}$$

$$np = 5$$

$$n\left(\frac{1}{5}\right) = 5$$

$$\therefore \quad n = 25$$

Hence, the binomial distribution is

$$P(X = x) = {}^{n}C_{x}\, p^{x}\, q^{n-x}$$

$$= {}^{25}C_{x} \left(\frac{1}{5}\right)^{x} \left(\frac{4}{5}\right)^{25-x}, \qquad x = 0, 1, 2, \ldots, 25$$

Atmiya University Rajkot

Example 2

The mean and variance of a binomial variate are 8 and 6. Find $P(X \geq 2)$.

Solution

$$\mu = np = 8$$

$$\sigma^2 = npq = 6$$

$$\frac{npq}{np} = \frac{6}{8} = \frac{3}{4}$$

$$\therefore \; q = \frac{3}{4}$$

$$p = 1 - q = 1 - \frac{3}{4} = \frac{1}{4}$$

$$np = 8$$

$$n\left(\frac{1}{4}\right) = 8$$

$$\therefore \; n = 32$$

$$P(X = x) = {}^{n}C_x \, p^x \, q^{n-x}$$

$$= {}^{32}C_x \left(\frac{1}{4}\right)^x \left(\frac{3}{4}\right)^{32-x}, \quad x = 0, 1, 2, \ldots, 32$$

$$P(X \geq 2) = 1 - P(X < 2)$$

$$= 1 - [P(X = 0) + P(X = 1)]$$

$$= 1 - \sum_{x=0}^{1} P(X = x)$$

$$= 1 - \sum_{x=0}^{1} {}^{32}C_x \left(\frac{1}{4}\right)^x \left(\frac{3}{4}\right)^{32-x}$$

$$= 0.9988$$

Example 3

Suppose $P(X = 0) = 1 - P(X = 1)$. If $E(X) = 3\,Var\,(X)$, find $P(X = 0)$.

Solution

Atmiya University Rajkot

$$E(X) = 3\,\mathrm{Var}\,(X)$$

$$np = 3npq$$

$$1 = 3q$$

Example 4

The mean and variance of a binomial distribution are 4 and $\frac{4}{3}$ respectively. Find $P(X \geq 1)$.

Solution

$$\mu = np = 4$$

$$\sigma^2 = npq = \frac{4}{3}$$

$$\frac{npq}{np} = \frac{\frac{4}{3}}{4} = \frac{1}{3}$$

$$\therefore \quad q = \frac{1}{3}$$

$$p = 1 - q = 1 - \frac{1}{3} = \frac{2}{3}$$

$$np = 4$$

$$n\left(\frac{2}{3}\right) = 4$$

$$\therefore \quad n = 6$$

$$P(X = x) = {}^nC_x \, p^x \, q^{n-x}$$

$$= {}^6C_x \left(\frac{2}{3}\right)^x \left(\frac{1}{3}\right)^{6-x}, \quad x = 0, 1, 2, \ldots, 6$$

$$P(X \geq 1) = 1 - P(X < 1)$$

$$= 1 - P(X = 0)$$

Atmiya University Rajkot

$$= 1 - {}^6C_0 \left(\frac{2}{3}\right)^0 \left(\frac{1}{3}\right)^6$$

$$= 0.9986$$

Example 5

A discrete random variable X has mean 6 and variance 2. If it is assumed that the distribution is binomial, find the probability that $5 \le X \le 7$.

Solution

$$\mu = np = 6$$

$$\sigma^2 = npq = 2$$

$$\frac{npq}{np} = \frac{2}{6} = \frac{1}{3}$$

$$\therefore \; q = \frac{1}{3}$$

$$p = 1 - q = 1 - \frac{1}{3} = \frac{2}{3}$$

$$np = 6$$

$$n\left(\frac{2}{3}\right) = 6$$

$$\therefore \; n = 9$$

$$P(X = x) = {}^nC_x \, p^x \, q^{n-x}$$

$$= {}^9C_x \left(\frac{2}{3}\right)^x \left(\frac{1}{3}\right)^{9-x}, \quad x = 0, 1, 2, \ldots, 9$$

$$P(5 \le X \le 7) = P(X = 5) + P(X = 6) + P(X = 7)$$

$$= \sum_{x=5}^{7} P(X = x)$$

$$= \sum_{x=5}^{7} {}^9C_x \left(\frac{2}{3}\right)^x \left(\frac{1}{3}\right)^{9-x}$$

$$= \frac{4672}{6561}$$

$$= 0.7121$$

Atmiya University Rajkot

Example 6

With the usual notation, find p for a binomial distribution if n = 6 and $9P(X = 4) = P(X = 2)$.

Solution

For the binomial distribution,

$$P(X = x) = {}^{n}C_x \, p^x \, q^{n-x}, \quad x = 0, 1, 2, \ldots, n$$

$$n = 6$$

Atmiya University Rajkot

$$9\,P(X = 4) = P(X = 2)$$

$$9\,{}^{6}C_4 \, p^4 \, q^2 = {}^{6}C_2 \, p^2 q^4$$

$$9\,p^2 = q^2 = (1 - p)^2$$

$$9\,p^2 = 1 - 2p + p^2$$

$$8p^2 + 2p - 1 = 0$$

$$p = \frac{-2 \pm \sqrt{4 + 32}}{2 \times 8} = \frac{-2 \pm 6}{16} = -\frac{1}{2}, \frac{1}{4}$$

Since probability connot be negative, $p = \frac{1}{4}$.

Example 1

Find out the fallacy if any in the statement. "The mean of a Poisson distribution is 2 and the variance is 3."

Solution

In a Poisson distribution, the mean and variance are same. Hence, the above statement is false.

Example 2

If the mean of the Poisson distribution is 4, find

$$P(\lambda - 2\sigma < X < \lambda + 2\sigma).$$

Solution

For a Poisson distribution,

$$\text{Variance} = \lambda$$

$$\text{Mean} = \lambda = 4, \qquad \sigma = 2$$

$$P(X = x) = \frac{e^{-\lambda}\,\lambda^x}{x!} = \frac{e^{-4}4^x}{x!}, \qquad x = 0, 1, 2, \ldots$$

$$P(\lambda - 2\sigma < X < \lambda + 2\sigma) = P(0 < X < 8)$$

$$= \sum_{x=1}^{7} P(X = x)$$

$$= \sum_{x=1}^{7} \frac{e^{-4}4^x}{x!}$$

$$= 0.9306$$

Example 3

If the mean of a Poisson variable is 1.8, find (i) $P(X > 1)$, (ii) $P(X = 5)$, and (iii) $P(0 < X < 5)$.

Solution

For a Poisson distribution,

$$\lambda = 1.8$$

$$P(X = x) = \frac{e^{-\lambda}\lambda^x}{x!} = \frac{e^{-1.8}1.8^x}{x!}, \quad x = 0, 1, 2, \ldots$$

(i) $P(X > 1) = 1 - P(X \le 1)$

$$= 1 - [P(X = 0) + P(X = 1)]$$

$$= 1 - \sum_{x=0}^{1} P(X = x)$$

$$= 1 - \sum_{x=0}^{1} \frac{e^{-1.8}1.8^x}{x!}$$

$$= 0.5372$$

(ii) $P(X = 5) = \dfrac{e^{-1.8}1.8^5}{5!} = 0.026$

(iii) $P(0 < X < 5) = P(X = 1) + P(X = 2) + P(X = 3) + P(X = 4)$

$$= \sum_{x=1}^{4} P(X = x)$$

$$= \sum_{x=1}^{4} \frac{e^{-1.8}1.8^x}{x!}$$

$$= 0.7983$$

Atmiya University Rajkot

Example 4

If a random variable has a Poisson distribution such that $P(X = 1) = P(X = 2)$, find (i) the mean of the distribution, (ii) $P(X = 4)$, (iii) $P(X \geq 1)$, and (iv) $P(1 < X < 4)$.

Solution

For a Poisson distribution,

$$P(X = x) = \frac{e^{-\lambda}\lambda^x}{x!}, \quad x = 0, 1, 2, \ldots$$

(i) $P(X = 1) = P(X = 2)$

$$\frac{e^{-\lambda}\lambda^1}{1!} = \frac{e^{-\lambda}\lambda^2}{2!}$$

$$\lambda^2 = 2\lambda$$

$$\lambda^2 - 2\lambda = 0$$

$$\lambda(\lambda - 2) = 0$$

$$\lambda = 0 \text{ or } \lambda = 2$$

Since $\lambda \neq 0$, $\quad \lambda = 2$

Hence, $P(X = x) = \dfrac{e^{-\lambda}\lambda^x}{x!} = \dfrac{e^{-2}\,2^x}{x!}, \qquad x = 0, 1, 2, \ldots$

(ii) $P(X = 4) = \dfrac{e^{-2}2^4}{4!} = 0.9022$

(iii) $P(X \geq 1) = 1 - P(X < 1)$

$$= 1 - P(X = 0)$$

$$= 1 - \frac{e^{-2}2^0}{0!}$$

$$= 0.8647$$

(iv) $P(1 < X < 4) = P(X = 2) + P(X = 3)$

$$= \sum_{x=2}^{3} P(X = x)$$

$$= \sum_{x=2}^{3} \frac{e^{-2}2^x}{x!}$$

$$= 0.4511$$

Atmiya University Rajkot

Chapter – 4 Some Important Linear Operators

Observation:
A polynomial with coefficients which are complex numbers has all its roots in the complex field.
The only irreducible, non-constant, polynomials over the field of real numbers are either of degree 1 or of degree 2.

Unitary Linear Transformation:
The linear transformation $T \in A(V)$ is said to be unitary if $\langle T(u), T(v)\rangle = \langle u, v\rangle$ for all, $v \in V$.

Note:
A unitary transformation is one which preserves all the structure of vector space V, its addition, its multiplicationby scalars and its inner product.

A unitary transformation also preserves norm (length)

$$\|v\| = \sqrt{\langle v, v\rangle} = \sqrt{\langle T(v), T(v)\rangle} = \|T(v)\|$$

The converse is also true, which is proved in the next result.

Result – 1 If $\langle T(v), T(v)\rangle = \langle v, v\rangle$ for all $v \in V$ then T is unitary.

Proof: Let $u, v \in V$ and $\langle T(u + v), T(u + v)\rangle = \langle u + v, u + v\rangle$

Expanding this we have

$$\langle T(u) + T(v), T(u) + T(v)\rangle = \langle u + v, u + v\rangle$$

$$\langle T(u), T(u)\rangle + \langle T(u), T(v)\rangle + \langle T(v), T(u)\rangle + \langle T(v), T(v)\rangle$$
$$= \langle u, u\rangle + \langle u, v\rangle + \langle v, u\rangle + \langle v, v\rangle$$

Note that $\langle T(u), T(u)\rangle = \langle u, u\rangle$ (By hypothesis)
we have

$$\langle u, u\rangle + \langle T(u), T(v)\rangle + \langle T(v), T(u)\rangle + \langle v, v\rangle$$
$$= \langle u, u\rangle + \langle u, v\rangle + \langle v, u\rangle + \langle v, v\rangle$$

$\langle T(u), T(v)\rangle + \langle T(v), T(u)\rangle = \langle u, v\rangle + \langle v, u\rangle$ ----- (1)

For , $v \in V$. In equation (1) replace v by iv, we have

$$\langle T(u), T(iv)\rangle + \langle T(iv), T(u)\rangle = \langle u, iv\rangle + \langle iv, u\rangle$$
$$\langle T(u), iT(v)\rangle + \langle iT(v), T(u)\rangle = -i\langle u, v\rangle + i\langle v, u\rangle$$
$$-i\langle T(u), T(v)\rangle + i\langle T(v), T(u)\rangle = -i\langle u, v\rangle + i\langle v, u\rangle$$

Atmiya University Rajkot

$-\langle T(u), T(v)\rangle + \langle T(v), T(u)\rangle = -\langle u, v\rangle + \langle v, u\rangle$ ------ (2)
Adding (1) and (2) results, we have
$2\langle T(v), T(u)\rangle = 2\langle v, u\rangle$for all $v \in V$
$\langle T(v), T(u)\rangle = \langle v, u\rangle$for all $v \in V$
Hence T is unitary.

Result – 2
If $T \in A(V)$ is such that $\langle T\ (v), u\rangle = 0$ for all $\in V$, then $T\ =\ 0$.

Proof: Let $T \in A(V)$and$\langle T\ (v), u\rangle = 0$ for all $v \in V$
Since ($\langle T\ (v), v\rangle = 0$ for $v \in V$,
Given$u, w \in V, \langle T\ (u\ +\ w)\ , u +\ w\rangle = 0$

Expanding this and use $\langle T\ (u), u\rangle = 0$, $\langle T\ (w)\ , w\rangle = 0$,
we obtain$\langle T\ (u\ )\ + T\ (w)\ , u\ +\ w\rangle = 0$

$$\langle T\ (u\ )\ , u\rangle + \langle T\ (u)\ , w\rangle + \langle T\ (\ w), u\rangle + \langle T(w)\ , w\rangle = 0$$

$\langle T\ (u)\ , w\rangle + \langle T\ (w), u\rangle = 0$for all $u, w \in V$ ----- (1)
Since equation (1) holds for arbitrary *w* in V, it still must hold
if we replace in it $w$by iw
where$i^2\ = -\ 1$

But $\langle T\ (u)\ , iw\rangle = -i\ \langle T\ (u)\ , w\rangle$whereas$\langle T\ (iw)\ , u\rangle = i\langle T(\ w)\ , u\rangle$
Substituting these values in (1) and we have

$$\langle T\ (u)\ , \mathrm{i}w\rangle + \langle T\ (\mathrm{i}w), u\rangle = 0$$

$$-i\langle T\ (u)\ , w\rangle + i\langle T\ (w), u\rangle = 0$$

$-\langle T\ (u), w\rangle + \langle T\ (w), u\rangle = 0$ ------ (2)

Adding (1) and (2) we get,

$$2\langle T\ (w), u\rangle = 0 \Rightarrow \langle T\ (w), u\rangle = 0, \forall u, w \in V$$

Whence in particular $\langle T\ (w)\ , T\ (w)\rangle = 0$
By the property of inner product space,
we must have $T\ (w)\ =\ 0$ for all $w \in V$.Hence T = 0.

Note:
If *V* is an inner product space over the real field the above result may be false.

For example,
Let = $\{(a, b)/a, b\ real\}$, where inner products is the dot product.

Atmiya University Rajkot

Let T belinear transformation defined as, $T(a,b) = (-b,a)$
This shows that $\langle T\ (v)\ , v\rangle =\ 0$ for all $v \in V$ but note that $T \neq 0$.

Theorem –2 The linear transformation T on V is unitary if and only if it takes an orthonormal basis of V (domain) into an orthonormal basis of V (codomain).

Proof: Suppose that $\{v_1, v_2, v_3 \ldots, v_n\}$is an orthonormal basis of V (domain),
Thus $\langle v_i, v_j\rangle = 0,$ for $i \neq j$ while$\langle v_i, v_i\rangle = 1$

We will show that if T is unitary then$\{T(v_1), T(v_2), T(v_3) \ldots, T(v_n)\}$ is also an orthonormal basis of V (codomain).
Note that $\langle T(v_i), T(v_j)\rangle = \langle v_i, v_j\rangle\ =\ 0,$ for$i \neq j$
While $\langle T(v_i), T(v_i)\rangle = \langle v_i, v_i\rangle\ = 1$
Thus $\{T(v_1), T(v_2), T(v_3) \ldots, T(v_n)\}$ is also an orthonormal basis of V (codomain).

On the other hand, if $T \in A(V)$ is such that both the sets $\{v_1, v_2, v_3 \ldots, v_n\}$ and $\{T(v_1), T(v_2), T(v_3) \ldots, T(v_n)\}$are orthonormal basisof V
if$u, w \in V$then$u = \sum_{i=1}^{n} \alpha_i v_i$ and $w = \sum_{i=1}^{n} \beta_i v_i$ ---- (1)

Now, $\langle u, w\rangle = \langle \sum_{i=1}^{n} \alpha_i v_i\ , \sum_{i=1}^{n} \beta_i v_i\rangle$
$\langle u, w\rangle = \langle \alpha_1 v_1 + \alpha_2 v_2 + \alpha_3 v_3 + \ldots + \alpha_n v_n, \beta_1 v_1 + \beta_2 v_2 + \beta_3 v_3 + \ldots + \beta_n v_n\rangle$
$\langle u, w\rangle = \langle \alpha_1 v_1, \beta_1 v_1\rangle + \langle \alpha_1 v_1, \beta_2 v_2\rangle + \langle \alpha_1 v_1, \beta_3 v_3\rangle + \ldots + \langle \alpha_1 v_1, \beta_n v_n\rangle$
$+\langle \alpha_2 v_2, \beta_1 v_1\rangle + \langle \alpha_2 v_2, \beta_2 v_2\rangle + \langle \alpha_2 v_2, \beta_3 v_3\rangle + \ldots + \langle \alpha_2 v_2, \beta_n v_n\rangle + \cdots +$
$\langle \alpha_n v_n, \beta_1 v_1\rangle + \langle \alpha_n v_n, \beta_2 v_2\rangle + \langle \alpha_n v_n, \beta_3 v_3\rangle + \ldots + \langle \alpha_n v_n, \beta_n v_n\rangle$

$\langle u, w\rangle = \alpha_1 \overline{\beta_1} \langle v_1, v_1\rangle + \alpha_1 \overline{\beta_2} \langle v_1, v_2\rangle + \alpha_1 \overline{\beta_3} \langle v_1, v_3\rangle + \ldots + \alpha_1 \overline{\beta_n} \langle v_1, v_n\rangle$
$+\alpha_2 \overline{\beta_1} \langle v_2, v_1\rangle + \alpha_2 \overline{\beta_2} \langle v_2, v_2\rangle + \alpha_2 \overline{\beta_3} \langle v_2, v_3\rangle + \ldots + \alpha_2 \overline{\beta_n} \langle v_2, v_n\rangle + \cdots +$
$\alpha_n \overline{\beta_1} \langle v_n, v_1\rangle + \alpha_n \overline{\beta_2} \langle v_n, v_2\rangle + \alpha_n \overline{\beta_3} \langle v_n, v_3\rangle + \ldots + \alpha_n \overline{\beta_n} \langle v_n, v_n\rangle$

Since $\langle v_i, v_j\rangle = 0,$ for $i \neq j$ while$\langle v_i, v_i\rangle = 1$, the above relation will be reduced as follows,
$\langle u, w\rangle = \alpha_1 \overline{\beta_1} \langle v_1, v_1\rangle + \alpha_2 \overline{\beta_2} \langle v_2, v_2\rangle + \ldots + \alpha_n \overline{\beta_n} \langle v_n, v_n\rangle$
$\langle u, w\rangle = \alpha_1 \overline{\beta_1} + \alpha_2 \overline{\beta_2} + \ldots + \alpha_n \overline{\beta_n}$ ---- (2)

Now, we have $u = \sum_{i=1}^{n} \alpha_i v_i$ and $w = \sum_{i=1}^{n} \beta_i v_i$ (By – 1)
$\Rightarrow T(u) = T(\sum_{i=1}^{n} \alpha_i v_i)andT(w) = T(\sum_{i=1}^{n} \beta_i v_i)$
$\Rightarrow T(u) = \sum_{i=1}^{n} \alpha_i\, T(v_i)andT(w) = \sum_{i=1}^{n} \beta_i\, T(v_i)$

Consider $\langle T(u), T(w)\rangle = \langle \sum_{i=1}^{n} \alpha_i T(v_i), \sum_{i=1}^{n} \beta_i T(v_i)\rangle$

Atmiya University
Rajkot

Since $\langle T(v_i), T(v_j)\rangle = 0$, for $i \neq j$ while$\langle T(v_i), T(v_i)\rangle = 1$
By similar steps as that of relation (2), we obtain
$\langle T(u), T(w)\rangle = \alpha_1\overline{\beta_1} + \alpha_2\overline{\beta_2} + \ldots + \alpha_n\overline{\beta_n}$
$\langle T(u), T(w)\rangle = \langle u, w\rangle$
Thus T is unitary

Result – 3If$T \in A(V)$ then given any vector $v \in V$there exists an element $w \in V$, depending on $v$and T, such that $\langle T\ (u), v\rangle = \langle u, w\rangle$, for all $u \in V$. This element $w$is uniquely determined by $v$and T.

Proof: Let$T \in A(V)$for any vector$v \in V$

To prove the result, it is sufficient to show that$w \in V$which works for all the elements of abasis of V.

Let $\{u_1, u_2, \ldots, u_n\}$be an orthonormal basis of V.
We define, $w = \sum_{i=1}^{n}\overline{\langle T(u_i), v\rangle}\, u_i$, for $w \in V$
Consider $\langle u_i, w\rangle = \langle u_i, \sum_{i=1}^{n}\overline{\langle T(u_i), v\rangle}\, u_i\rangle$
$\langle u_i, w\rangle = \langle T(u_1), v\rangle\langle u_i, u_1\rangle + \langle T(u_2), v\rangle\langle u_i, u_2\rangle + \cdots + \langle T(u_i), v\rangle\langle u_i, u_i\rangle + \cdots + \langle T(u_n), v\rangle\langle u_i, u_n\rangle$
Since $\{u_1, u_2, \ldots, u_n\}$is an orthonormal basis of V.
$\langle u_i, u_j\rangle = 0$, for $i \neq j$, while $\langle u_i, u_i\rangle = 1$

$$\langle u_i, w\rangle = \langle T(u_i), v\rangle\langle u_i, u_i\rangle$$

$$\langle u_i, w\rangle = \langle T(u_i), v\rangle, \text{for } i = 1,2,3, \ldots, n$$

Thus, $\langle T\ (u), v\rangle = \langle u, w\rangle$, for all $u \in V$

For uniqueness,

Consider $\langle T\ (u), v\rangle = \langle u, w_1\rangle$and $\langle T\ (u), v\rangle = \langle u, w_2\rangle$, for all $u \in V$

$\Rightarrow \langle u, w_1\rangle = \langle u, w_2\rangle$

$\Rightarrow \langle u, w_1\rangle - \langle u, w_2\rangle = 0$

$\Rightarrow \langle u, w_1 - w_2\rangle = 0$, for all $u \in V$

Thus $u = w_1 - w_2$

Therefore $w_1 - w_2 = 0 \Rightarrow w_1 = w_2$

Hence w is uniquely determined by $v$and T.

Atmiya University Rajkot

Adjoint of T: If $T \in A(V)$ then the **adjoint of T** written as T^*, it is defined by $(\langle T(u), v\rangle = \langle u, T^*(v)\rangle$for all $u, v \in V$

Theorem – 2If $T \in A(V)$is LT then$T^* \in A(V)$is also LT moreover,

(1) $(T^*)^* = T$
(2) $(S + T)^* = S^* + T^*$
(3) $(\alpha S)^* = \bar{\alpha} S^*$
(4) $(ST)^* = T^* S^*$ for all $S, T \in A(V)$ and $\alpha \in \mathbb{F}$

Proof: Let $T \in A(V)$

We show that$T^*$is a linear transformation on V. If $u, v, w$are in V, then

$\langle u, T^*(v + w)\rangle = \langle T(u), v + w\rangle$

$\langle u, T^*(v + w)\rangle = \langle T(u), v\rangle + \langle T(u), w\rangle$

$\langle u, T^*(v + w)\rangle = \langle u, T^*(v)\rangle + \langle u, T^*(w)\rangle$

$\langle u, T^*(v + w)\rangle = \langle u, T^*(v) + T^*(w)\rangle$

Which implies, $T^*(v + w) = T^*(v) + T^*(w)$

Similarly, for $\alpha \in \mathbb{F}$

$\langle u, T^*(\alpha v)\rangle = \langle T(u), \alpha v\rangle$

$\langle u, T^*(\alpha v)\rangle = \bar{\alpha}\langle T(u), v\rangle$

$\langle u, T^*(\alpha v)\rangle = \bar{\alpha}\langle u, T^*(v)\rangle$

$\langle u, T^*(\alpha v)\rangle = \langle u, \alpha\, T^*(v)\rangle$

Which implies, $T^*(\alpha v) = \alpha T^*(v)$

Thus, $T^* \in A(V)$is a linear transformation on$V$

To prove $(T^*)^* = T$

Consider$\langle u, (T^*)^*(v)\rangle = \langle T^*(u), v\rangle$

$\langle u, (T^*)^*(v)\rangle = \langle \overline{v, T^*(u)}\rangle$

$\langle u, (T^*)^*(v)\rangle = \langle \overline{T(v), u}\rangle$

Atmiya University Rajkot

$\langle u, (T^*)^*(v)\rangle = \langle u, T(v)\rangle$, for all $u, v \in V$

Which implies, $(\boldsymbol{T}^*)^*(\boldsymbol{v}) = \boldsymbol{T}(\boldsymbol{v})$,for all $u, v \in V$

Hence, $(\boldsymbol{T}^*)^* = \boldsymbol{T}$,for all $u, v \in V$

To prove, $(\boldsymbol{S} + \boldsymbol{T})^* = \boldsymbol{S}^* + \boldsymbol{T}^*$

Consider $\langle u, (S + T)^*(v)\rangle = \langle (S + T)(u), v\rangle$

$\langle u, (S + T)^*(v)\rangle = \langle S(u) + T(u), v\rangle$ (by property of LT)

$\langle u, (S + T)^*(v)\rangle = \langle S(u), v\rangle + \langle T(u), v\rangle$ (by property of IPS)

$$\langle u, (S + T)^*(v)\rangle = \langle u, S^*(v)\rangle + \langle u, T^*(v)\rangle$$

$\langle u, (S + T)^*(v)\rangle = \langle u, S^*(v) + T^*(v)\rangle$(byadditivity property of IPS)

$\langle u, (S + T)^*(v)\rangle = \langle u, (S^* + T^*)(v)\rangle$ (by property of LT)

Which implies, $(S + T)^*(v) = (S^* + T^*)(v)$, for all $u, v \in V$

Thus,$(\boldsymbol{S} + \boldsymbol{T})^* = \boldsymbol{S}^* + \boldsymbol{T}^*$**, for all** $\boldsymbol{u}, \boldsymbol{v} \in \boldsymbol{V}$

To prove, $(\boldsymbol{\alpha S})^* = \bar{\boldsymbol{\alpha}}\boldsymbol{S}^*$

Consider, $\langle u, (\alpha S)^*(v)\rangle = \langle (\alpha S)(u), v\rangle$

$\langle u, (\alpha S)^*(v)\rangle = \langle \alpha\, S(u), v\rangle$(by property of LT)

$\langle u, (\alpha S)^*(v)\rangle = \alpha\langle S(u), v\rangle$ (by Homogeneity property of IPS)

$$\langle u, (\alpha S)^*(v)\rangle = \alpha\langle u, S^*(v)\rangle$$

$\langle u, (\alpha S)^*(v)\rangle = \langle u, \bar{\alpha} S^*(v)\rangle$(by property of IPS)

Which implies, $(\alpha S)^*(v) = \bar{\alpha} S^*(v)$, for all $u, v \in V$

Hence, $(\boldsymbol{\alpha S})^* = \bar{\boldsymbol{\alpha}}\boldsymbol{S}^*$, **for all** $\boldsymbol{u}, \boldsymbol{v} \in \boldsymbol{V}$

To prove, $(ST)^* = T^*S^*$ for all $S, T \in A(V)$ and $\alpha \in \mathbb{F}$

Consider, $\langle u, (ST)^*(v)\rangle = \langle (ST)u, v\rangle$

$\langle u, (ST)^*(v)\rangle = \langle S[T(u)], v\rangle$ (by property of LT)

$\langle u, (ST)^*(v)\rangle = \langle T(u), S^*(v)\rangle$

Atmiya University Rajkot

$$\langle u, (ST)^*(v)\rangle = \langle u, T^*[S^*(v)]\rangle$$

$\langle u, (ST)^*(v)\rangle = \langle u, (T^*S^*)v\rangle$ (by property of LT)

Which implies, $(ST)^*(v) = (T^*S^*)(v)$, for all $u, v \in V$

Hence, $(\boldsymbol{ST})^* = \boldsymbol{T}^*\boldsymbol{S}^*$, **for all** $\boldsymbol{u}, \boldsymbol{v} \in \boldsymbol{V}$

Result – 4 $\boldsymbol{T} \in \boldsymbol{A}(\boldsymbol{V})$ **is unitary if and only if** $\boldsymbol{T}^*\boldsymbol{T} = \mathbf{1}$

Proof: Let$T \in A(V)$ is unitary.

By definition of unitary linear transformation

$\langle T(u), T(v)\rangle = \langle u, v\rangle$, for all $u, v \in V$

Now, $\langle u, v\rangle = \langle T(u), T(v)\rangle = \langle u, T^*\, T(v)\rangle$

Which implies, $v = T^*\, T(v)$

That is, $\boldsymbol{T}^*\, \boldsymbol{T} = \mathbf{1}$

Conversely, $T^*\, T = 1$

Then $\langle u, v\rangle = \langle u, (T^*\, T)(v)\rangle$

$\langle u, v\rangle = \langle u, T^*[T(v)]\rangle$

$$\langle u, v\rangle = \langle T(u), T(v)\rangle$$

Thus, $\boldsymbol{T}$ **is unitary.**

Note:

1) A unitary linear transformation is non – singular and its inverse is just its adjoint.
2) From $T^*\, T = 1$ we must have $TT^* = 1$, as linear transformation is commutative.

Atmiya University Rajkot

Self – adjoint or Hermitian LT: A linear transformation $T \in A(V)$ is called self-adjoint or Hermitian if $T^* = T$.

Skew – Hermitian LT: A linear transformation $T \in A(V)$ is called skew Hermitian if $T^* = -T$.

Note: A linear transformation $S \in A(V)$ can be written in the form

$$S = \frac{S + S^*}{2} + i\left(\frac{S - S^*}{2i}\right)$$

where $\frac{S+S^*}{2}$ and $\frac{S-S^*}{2i}$ are Hermitian.
That is, $S = A + iB$, where A and B both are Hermitian

Theorem – 3 If linear transformation $T \in A(V)$ is Hermitian, then all its characteristics roots are real.

Proof: Let λ be a characteristic root of T, thus there is a $v \neq o \; in \; V$ such that $T(v) = \lambda v$.

We compute, $\lambda\langle v, v\rangle = \langle \lambda v, v\rangle$

$\lambda\langle v, v\rangle = \langle T(v), v\rangle$

$\lambda\langle v, v\rangle = \langle v, T^*(v)\rangle$

$\lambda\langle v, v\rangle = \langle v, T(v)\rangle$ (T is Hermitian)

$\lambda\langle v, v\rangle = \langle v, \lambda v\rangle$

$\lambda\langle v, v\rangle = \bar{\lambda}\langle v, v\rangle$

Since T is Hermitian and $\langle v, v\rangle \neq 0$

We have $\lambda = \bar{\lambda}$

Hence λ is real.

Result – 5 If linear transformation $S \in A(V)$and $S^*S(v) = 0, \forall v \in V$ then $S(v) = 0$.

Proof: Let linear transformation $S \in A(V)$

Since, $S^*S(v) = 0, \forall v \in V$

$\Rightarrow \langle v, S^*S(v)\rangle = 0, \forall v \in V$

$$\Rightarrow \langle S(v), S(v)\rangle = 0$$

Atmiya University Rajkot

$$\Rightarrow S(v) = 0$$

Theorem – 4If $\{v_1, v_2, \dots, v_n\}$ is an orthonormal basis of V.If the matrix associated with linear transformation $T \in A(V)$w.r.t. basis is $\alpha_{ij}$and the matrix associated with linear transformation $T^* \in A(V)$w.r.t. basis is β_{ij} then$\beta_{ji} = \bar{\alpha}_{ji}$

Proof: Let $B = \{v_1, v_2, \dots, v_n\}$be an orthonormal basis of V.

Let $[\alpha_{ij}]$ and $[\beta_{ij}]$ be the matrices associated with linear transformation T and T^* with respect to basis set B.

It follows that,

$T(v_1) = \alpha_{11}v_1 + \alpha_{21}v_2 + \cdots + \alpha_{n1}v_n$

$T(v_2) = \alpha_{12}v_1 + \alpha_{22}v_2 + \cdots + \alpha_{n2}v_n$

$$T(v_3) = \alpha_{13}v_1 + \alpha_{23}v_2 + \cdots + \alpha_{n3}v_n$$

… … … … … …

$T(v_n) = \alpha_{1n}v_1 + \alpha_{2n}v_2 + \cdots + \alpha_{nn}v_n$

$\Rightarrow T(v_i) = \sum_{j=1}^{n} \alpha_{ji}v_j$, for $i = 1,2,3, \dots, n$

Similarly, $T^*(v_i) = \sum_{j=1}^{n} \beta_{ji}v_j$, for$i = 1,2,3, \dots, n$

Now, $\langle v_i, T(v_i)\rangle = \langle v_i, \sum_{j=1}^{n} \alpha_{ji}v_j\rangle$

$$\langle v_i, T(v_i)\rangle = \langle v_i, \alpha_{1i}v_1 + \alpha_{2i}v_2 + \alpha_{3i}v_3 + \cdots + \alpha_{ni}v_n\rangle$$

$$\langle v_i, T(v_i)\rangle = \langle v_i, \alpha_{1i}v_1\rangle + \langle v_i, \alpha_{2i}v_2\rangle + \langle v_i, \alpha_{3i}v_3\rangle + \cdots + \langle v_i, \alpha_{ni}v_n\rangle$$

$\langle v_i, T(v_i)\rangle = \bar{\alpha}_{1i}\langle v_i, v_1\rangle + \bar{\alpha}_{2i}\langle v_i, v_2\rangle + \bar{\alpha}_{3i}\langle v_i, v_3\rangle + \cdots + \bar{\alpha}_{ni}\langle v_i, v_n\rangle$

Since, $B = \{v_1, v_2, \dots, v_n\}$ be an orthonormal basis of V

$\langle v_i, T(v_i)\rangle = \bar{\alpha}_{1i} + \bar{\alpha}_{2i} + \bar{\alpha}_{3i} + \cdots + \bar{\alpha}_{ni}$

$\langle v_i, T(v_i)\rangle = \bar{\alpha}_{ji}$, for $i = j = 1,2,3, \dots, n$ ------ (1)

Now, $\langle T^*(v_i), v_i\rangle = \langle \sum_{j=1}^{n} \beta_{ji}v_j, v_i\rangle$

$$\langle T^*(v_i), v_i\rangle = \langle \beta_{1i}v_1 + \beta_{2i}v_2 + \beta_{3i}v_3 + \cdots + \beta_{ni}v_n, v_i\rangle$$

Atmiya University Rajkot

$\langle T^*(v_i), v_i\rangle = \langle \beta_{1i}v_1, v_i\rangle + \langle \beta_{2i}v_2, v_i\rangle + \langle \beta_{3i}v_3, v_i\rangle + \cdots + \langle \beta_{ni}v_n, v_i\rangle$

$\langle T^*(v_i), v_i\rangle = \beta_{1i}\langle v_1, v_i\rangle + \beta_{2i}\langle v_2, v_i\rangle + \beta_{3i}\langle v_3, v_i\rangle + \cdots + \beta_{ni}\langle v_n, v_i\rangle$

Since, $B = \{v_1, v_2, \dots, v_n\}$is an orthonormal basis of V.

$\langle T^*(v_i), v_i\rangle = \beta_{1i} + \beta_{2i} + \beta_{3i} + \cdots + \beta_{ni}$

$\langle T^*(v_i), v_i\rangle = \beta_{ji}$, for $i = j = 1,2,3, \dots, n$ ----- (2)

Now, $\langle T^*(v_i), v_i\rangle = \langle v_i, (T^*)^*(v_i)\rangle$

$\langle T^*(v_i), v_i\rangle = \langle v_i, T(v_i)\rangle$ ---- (3)

From (1), (2) and (3) $\beta_{ji} = \bar{\alpha}_{ji}$

Result – 6If T is Hermitian and $T^k(v) = 0, \forall v \in V$ for $k \geq 1$then $T(v) = 0$.

Proof: Let T is Hermitian and $T^k(v) = 0$ for $k \geq 1$
For $k = 1, T(v) = 0$ the result holds.
We show that if, $(T)^{2^m}(v) = 0$, for $2^m > k$ then $T(v) = 0, \forall v \in V$
Let S be Hermitian, which implies $S^* = S$.
Let $S = (T)^{2^{m-1}}$ and $S^* = S$
Then, $S^*S = (T)^{2^{m-1}} \cdot (T)^{2^{m-1}} = T^{2^m}$

$$\Rightarrow S^*S(v) = T^{2^m}(v) = 0$$
$$\Rightarrow S^*S(v) = 0$$

$\Rightarrow S(v) = 0$
$\Rightarrow (T)^{2^{m-1}}(v) = 0$
$\Rightarrow (T)^{2^{m-1}} = 0$, for $2^m > k$ ----- (1)

Now, Let $S = (T)^{2^{m-2}}$ and $S^* = S$
Then, $S^*S = (T)^{2^{m-2}} \cdot (T)^{2^{m-2}} = T^{2^{m-1}}$

$$\Rightarrow S^*S(v) = T^{2^{m-1}}(v) = 0$$
$$\Rightarrow S^*S(v) = 0$$

$\Rightarrow S(v) = 0$
$\Rightarrow (T)^{2^{m-2}}(v) = 0$
$\Rightarrow (T)^{2^{m-2}} = 0$, for $2^m > k$ --- (2)
Continuing in this way, we come down to,
$(T)^{2^{m-m}}(v) = T(v) = 0,\ \forall v \in V$, for $2^m > k$
Thus, $T(v) = 0,\ \forall v \in V$

Atmiya University Rajkot

Normal linear transformation:A linear transformation $T \in A(V)$ is said to be normal if $T^*T = TT^*$.

Result – 7If $N \in A(V)$ is a normal linear transformation and $N(v) = 0$ for$v \in V$ then $N^*(v) = 0$.

Proof: Let $N \in A(V)$ be a normal linear transformation and $N(v) = 0$ for $v \in V$.

Consider $\langle N^*(v), N^*(v)\rangle = \langle NN^*(v), v\rangle$

$\langle N^*(v), N^*(v)\rangle = \langle N^*N(v), v\rangle$, as N is a normal linear transformation

$\langle N^*(v), N^*(v)\rangle = \langle N(v), N(v)\rangle$

Since $N(v) = 0$

$$\Rightarrow \langle N(v), N(v)\rangle = 0$$
$$\Rightarrow \langle N^*(v), N^*(v)\rangle = 0$$

$\Rightarrow N^*(v) = 0$

Result – 8If λ is a characteristic root of the normal linear transformation N and $N(v) = \lambda v$then $N^*(v) = \bar{\lambda}v$.

Proof: Since N is normal, we know that $NN^* = N^*N$ --- (1)

Let λ be a characteristic root of the normal linear transformation N, that is $N(v) = \lambda v$. It follows that $N - \lambda = 0$.

Now, $(N-\lambda)(N-\lambda)^* = (N-\lambda)\left(N^* - \bar{\lambda}\right)$

$$(N-\lambda)(N-\lambda)^* = \left(NN^* - N\bar{\lambda} - N^*\lambda + \lambda\bar{\lambda}\right)$$
$$(N-\lambda)(N-\lambda)^* = \left(NN^* - N^*\lambda - N\bar{\lambda} + \lambda\bar{\lambda}\right)$$
$$(N-\lambda)(N-\lambda)^* = N^*(N-\lambda) - \bar{\lambda}(N-\lambda)$$
$$(N-\lambda)(N-\lambda)^* = \left(N^* - \bar{\lambda}\right)(N-\lambda)$$
$$(N-\lambda)(N-\lambda)^* = (N-\lambda)^*(N-\lambda)$$

So $(N-\lambda)$ is normal.

$\Rightarrow (N-\lambda) = 0$

$\Rightarrow (N-\lambda)^* = 0$

$\Rightarrow (N-\lambda)^*(v) = 0, v \in V$

$\Rightarrow (N^* - \bar{\lambda})(v) = 0, v \in V$

$\Rightarrow N^*(v) - \bar{\lambda}(v) = 0, v \in V$

Hence, $\boldsymbol{N^*(v) = \bar{\lambda}(v)}, v \in V$

Result – 9If T is unitary and if $\lambda$is a characteristic root of T, then $|\lambda|$=1.

Proof: Since T is unitary it is normal. That is $T^*T = TT^* = 1$

Let λbe a characteristic root of T and suppose that $T(v) = \lambda v$ with $v \neq 0 \in V$

Atmiya University Rajkot

$T^*(v) = \bar{\lambda}v$ (By result – 8)
Now, $T^*T(v) = T^*(\lambda v)$, for $v \neq 0 \in V$

$$T^*T(v) = \lambda T^*(v), \text{for } v \neq 0 \in V$$
$$T^*T(v) = \lambda(\bar{\lambda}v), \text{for } v \neq 0 \in V$$
$$T^*T(v) = (\lambda\bar{\lambda})(v), \text{for } v \neq 0 \in V$$

$(1)(v) = (\lambda\bar{\lambda})(v)$, for $v \neq 0 \in V$ (T is Unitary)

$$\Rightarrow (\lambda\bar{\lambda}) = 1$$

Thus, $|\boldsymbol{\lambda}| = \mathbf{1}$

Result – 10 If N is normal and $N^k(v) = 0$, for $v \in V$ then $N\ (v) = 0$.
Proof: Let $S = N^*N$and$S$ is Hermitian.
Now, $S(v) = N^*N(v)$, for $v \in V$ --- (1)

$$\Rightarrow S^k(v) = (N^*N)^k(v)$$
$$\Rightarrow S^k(v) = (N^*)^k(N^k)(v)$$
$$\Rightarrow S^k(v) = (N^*)^k N^k(v)$$

$\Rightarrow S^k(v) = 0$,as$N^k(v) = 0$
Since S is Hermitianand $S^k(v) = 0$, then we know that $S(v) = 0$
It follows that, $N^*N(v) = 0$ (By – 1)
Since $N \in T(V)$and $N^*N(v) = 0$, for $v \in V$, we know that $N(v) = 0$
Thus, $\boldsymbol{N(v) = 0}$

Result – 11if N is normal and if for $\lambda \in F$. $(N - \lambda)^k(v) = 0$then $N(v) = \lambda v$.
Proof: If N is normal then we know that, $(N - \lambda)$ is also normal.
By previous result, if $(N - \lambda)$ is normal and $(N - \lambda)^k(v) = 0$
It follows that, $(N - \lambda)(v) = 0$
That is, $N(v) - \lambda(v) = 0$
Thus, $N(v) = \lambda v$.

Result – 12Let N be a normal transformation and suppose that $\lambda$and $\mu$are two distinct characteristicsroots of N. If $v, w$are in Vsuch that $N(v) = \lambda v$ and $N(w) = \mu w$then $\langle v, w\rangle = 0$.
Proof: We compute $\langle N(v), w\rangle$ in two different ways.
Since, $N(v) = \lambda v$
We have $\langle N(v), w\rangle = \langle \lambda v, w\rangle = \lambda\langle v, w\rangle$ --- (1)
By hypothesis, μ is characteristics roots of N and$N(w) = \mu w$
We know that, if λ is a characteristic root of the normal linear transformation N and $N(v) = \lambda v$then $N^*(v) = \bar{\lambda}v$.
Which implies that, $N^*(w) = \bar{\mu}w$

Atmiya University Rajkot

Now, $\langle N(v), w\rangle = \langle v, N^*(w)\rangle = \langle v, \bar{\mu}w\rangle = \bar{\bar{\mu}}\langle v, w\rangle = \mu\langle v, w\rangle$
$\Rightarrow \langle N(v), w\rangle = \mu\langle v, w\rangle$ ---- (2)
From (1) and (2), we have

$$\lambda\langle v, w\rangle = \mu\langle v, w\rangle$$

$\Rightarrow \langle v, w\rangle = 0$, as $\lambda$and $\mu$are two distinct characteristics roots of N.
Thus, $\langle v, w\rangle = 0$.

Remarks:

- If N is a normal linear transformation on V, then there exists orthonormal basis, consisting of characteristic vectors of N, in which the matrix of N is diagonal.
  Equivalently, if N is a normal matrix there exists a unitary matrix U such that $\boldsymbol{UNU^{-1}}$ $(= \boldsymbol{UNU^*})$ **diagonal.**

- If T is a unitary transformationon V, then there is an orthonormal basis in which the matrix of T is diagonal.
  Equivalently, if T is a unitary matrix, then there is a unitary matrix U such that $\boldsymbol{UTU^{-1}}$ $(= \boldsymbol{UTU^*})$ **is diagonal.**

- If T is a Hermitian linear transformation then there exists an orthonormal basis in which the matrix of T is diagonal.
  Equivalently, if T is a Hermitian matrix, then there exists a unitary matrix U suchthat $\boldsymbol{UTU^{-1}}$ $(= \boldsymbol{UTU^*})$ **is diagonal.**

Theorem – 5 The normal transformation *N* is
1. Hermitian if and only if its characteristic roots are real.
2. Unitary if and only if its characteristic roots are all of absolute value 1.

Proof – 1: If N is Hermitian, then it is normal.Which implies that all its characteristic rootsare real. So the result holds.

Conversely, If N is normal and has only real charactristic roots, then for some unitary matrix U,

$$UNU^{-1} = UNU^* = D$$

where, D is a diagonal matrix with real entries on the diagonal.
Thus, $D^* = D$
Since $D^* = (UNU^*)^* = UN^*U^*$,
The relation $D^* = D$ implies
$UN^*U^* = UNU^*$and since U is invertible. We obtain $N^* = N$.
Thus N is Hermitian.

Atmiya University Rajkot

Proof – 2 If N is unitary transformation, then its characteristic roots are all of absolutevalue 1.
Since "IfT is unitary and if $\lambda$is a characteristic root of T, then $|\lambda| = 1$."

Conversely, If N is normal and has its characteristic roots of absolute value 1.
We know that, if N is a normal matrix there exists a unitary matrix U such that UNU^{-1} $(= UNU^*)$ diagonal.
Let $UNU^* = D$
Since U is invertible, $N = U^*DU \Rightarrow N^* = U^*D^*U$
Now $N^*N = (U^*D^*U)(U^*DU)$
$\Rightarrow N^*N = (U^*D^*(UU^*)DU)$
$\Rightarrow N^*N = (U^*(D^*D)U)$where$(UU^*) = 1$
$\Rightarrow N^*N = (U^*U)$where$(D^*D) = 1$
$\Rightarrow N^*N = 1$where$(U^*U) = 1$
Thus N is unitary.

Theorem – 6 The Hermitian linear transformation T is nonnegative (positive) if and only if all of its characteristic roots are nonnegative (positive).
Proof:
Let T be a Hermitian linear transformation.
Suppose that $T \geq 0$. If $\lambda$is a characteristic root of T, then $T(v) = \lambda v$for some $v \neq 0$.
Thus $0 \leq \langle T(v), v\rangle = \langle \lambda v, v\rangle = \lambda\langle v, v\rangle$, since $\langle v, v\rangle > 0$
We deduce that$\lambda \geq 0$.

Conversely, if T is Hermitian with nonnegative characteristic roots, then we can find an orthonormalbasis$\{v_1, v_2, \dots, v_n\}$consisting of characteristic roots of T.
It follows that, $T(v_i) = \lambda_i v_i$, for $i = 1,2, \dots, n$ and $\lambda_i \geq 0$.
For any$v \in V$, $v = \sum_{i=1}^{n} \alpha_i v_i$
Thus,$T(v) = T(\sum_{i=1}^{n} \alpha_i v_i) = \sum_{i=1}^{n} \alpha_i T(v_i) = \sum_{i=1}^{n} \alpha_i \lambda_i v_i$
Now $\langle T(v), v\rangle = \langle \sum_{i=1}^{n} \alpha_i \lambda_i v_i, \sum_{i=1}^{n} \alpha_i v_i\rangle = \sum_{i=1}^{n} \alpha_i \lambda_i \overline{\alpha_i} \langle v_i, v_i\rangle = \sum_{i=1}^{n} \alpha_i \lambda_i \overline{\alpha_i}$

By the orthonormality of the v_i's, Since $\lambda_i \geq 0$and$\alpha_i \overline{\alpha_i} \geq 0$,
We get that $\langle T(v), v\rangle \geq 0$
Hence $T \geq 0$.

Atmiya University Rajkot

Theorem – 7 If N is normal and $AN = NA$, then $AN^* = N^*A$.

Proof: Let N is normal and $AN = NA$

To prove $AN^* = N^*A$

Let $X = AN^* - N^*A$, we claim that $X = 0$.

That is to show that for $XX^* = 0$.

Since N commutes with A and N^*, it must commute with $(AN^* - N^*A)$

That is, $N(AN^* - N^*A) = (NAN^* - NN^*A)$

$$N(AN^* - N^*A) = (ANN^* - N^*NA)$$

$$N(AN^* - N^*A) = (AN^*N - N^*AN)$$

$$N(AN^* - N^*A) = (AN^* - N^*A)N$$

Thus, $XX^* = (AN^* - N^*A)\,(NA^* - A^*N)$

$XX^* = (AN^* - N^*A)NA^* - (AN^* - N^*A)A^*N$

$$XX^* = N\{(AN^* - N^*A)A^*\} - \{(AN^* - N^*A)A^*\}N$$

Now, $(AN^* - N^*A)A^* = AN^*A^* - N^*AA^*$

$$(AN^* - N^*A)A^* = AN^*A^* - N^*AA^*$$

$= N\{(AN^* - N^*A)A^*\} - \{(AN^* - N^*A)A^*\}N$

Being of the form NB – BN, the trace of XX* is 0. Thus X = 0 and AN* = N*A

Atmiya University Rajkot

Chapter - 5 Symmetric matrices and Real Quadratic form

Quadratic form:

An expression of the form $\sum_{i=1}^{n}\sum_{j=1}^{n} a_{ij}\, x_i x_j$ is called a **quadratic form** in n −variables $x_1, x_2, \dots, x_n$ over a field $\mathbb{F}$. Which is denoted by

$\boldsymbol{Q} = (\boldsymbol{x_1}, \boldsymbol{x_2}, \dots, \boldsymbol{x_n})$ or by simply $\boldsymbol{Q}$.Where $a_{ij} \in \mathbb{F}$.

Real quadratic form:

The quadratic form $Q = \sum_{i=1}^{n}\sum_{j=1}^{n} a_{ij}\, x_i x_j$ is called a **real quadratic form** if $a_{ij} \in \mathbb{F} = \mathbb{R}$ (the field of all real numbers)

For example:

(1) $ax^2 + 2hxy + by^2$ is a real quadratic form in two variables x and y.
(2) $x^2 + y^2 + z^2 + 2xy + 2yz + 2xz$ is a real quadratic form in three variables x, y and z.
(3) $x_1x_2 + x_2x_3 + x_3x_4$ is a real quadratic form in four variables x_1, x_2, x_3 and x_4.

Theorem – 1 Every quadratic form in n −variables $x_1, x_2, \dots, x_n$ over a field $\mathbb{F}$ can be expressed in the form $X'BX$. Where $X = [x_1, x_2, \dots, x_n]$ is a column vector and B is a symmetric matrix of order n over a field $\mathbb{F}$.

Proof: Let $Q = \sum_{i=1}^{n}\sum_{j=1}^{n} a_{ij}\, x_i x_j$ ------ (1)

be a quadratic form in n −variables $x_1, x_2, \dots, x_n$ over a field $\mathbb{F}$.

Expanding (1), we get

$$\begin{aligned} Q = a_{11}x_1x_1 + a_{12}x_1x_2 + a_{13}x_1x_3 + \cdots + a_{1n}x_1x_n \\ +a_{21}x_2x_1 + a_{22}x_2x_2 + a_{23}x_2x_3 + \cdots + a_{2n}x_2x_n \\ +a_{31}x_3x_1 + a_{32}x_3x_2 + a_{33}x_3x_3 + \cdots + a_{3n}x_3x_n + \cdots \\ +a_{n1}x_nx_1 + a_{n2}x_nx_2 + a_{n3}x_nx_3 + \cdots + a_{nn}x_nx_n \end{aligned}$$

$$\begin{aligned} Q = a_{11}x_1^2 + (a_{12} + a_{21})x_1x_2 + (a_{13} + a_{31})x_1x_3 + \cdots + (a_{1n} + a_{n1})x_1x_n \\ +a_{22}x_2^2 + (a_{23} + a_{32})x_2x_3 + \cdots + (a_{2n} + a_{n2})x_2x_n \\ +a_{33}x_3^2 + (a_{34} + a_{43})x_3x_4 + \cdots + (a_{3n} + a_{n3})x_3x_n + \cdots + a_{nn}x_n^2 \end{aligned}$$ ----- (2)

To construct B as a symmetric matrix of order n over a field $\mathbb{F}$,

Let $b_{ij} = \frac{1}{2}(a_{ij} + a_{ji})$ --- (3)

Atmiya University Rajkot

$$\Rightarrow (b_{ij})^T = \frac{1}{2}(a_{ij} + a_{ji})^T$$

$\Rightarrow b_{ji} = \frac{1}{2}(a_{ji} + a_{ij})$ ---- (4)

From (3) and (4), we have $b_{ij} = b_{ji}$ and $b_{ij} + b_{ji} = a_{ij} + a_{ji}$

Using above relation in equation (2), we have

$$\begin{aligned} Q = b_{11}x_1^2 + (b_{12} + b_{21})x_1x_2 + (b_{13} + b_{31})x_1x_3 + \cdots + (b_{1n} + b_{n1})x_1x_n \\ + b_{22}x_2^2 + (b_{23} + b_{32})x_2x_3 + \cdots + (b_{2n} + b_{n2})x_2x_n \\ + b_{33}x_3^2 + (b_{34} + b_{43})x_3x_4 + \cdots + (b_{3n} + b_{n3})x_3x_n + \cdots + b_{nn}x_n^2 \end{aligned}$$

$$\begin{aligned} Q = b_{11}x_1^2 + b_{12}x_1x_2 + b_{13}x_1x_3 + \cdots + b_{1n}x_1x_n \\ + b_{21}x_2x_1 + b_{22}x_2^2 + b_{23}x_2x_3 + \cdots + b_{2n}x_2x_n \\ + b_{31}x_3x_1 + b_{32}x_3x_2 + b_{33}x_3^2 + \cdots + b_{3n}x_3x_n + \cdots \\ + b_{n1}x_nx_1 + b_{n2}x_nx_2 + b_{n3}x_nx_3 + \cdots + b_{nn}x_n^2 \end{aligned}$$

$$Q = \sum_{i=1}^{n}\sum_{j=1}^{n} b_{ij}\, x_i x_j$$

Let $B = [b_{ij}]$ be a matrix of order $n \times n$. Clearly B is a symmetric matrix.

Since $X = [x_1, x_2, \dots, x_n]$ is a column matrix, $X' = [x_1, x_2, \dots, x_n]$ will be a row matrix.

That is, $X'BX = [X']_{1\times n}[B]_{n\times n}[X]_{n\times 1} = [X'BX]_{1\times 1}$

It follows that, $X'BX$ has a single element.

Which implies that $X'BX = \sum_{i=1}^{n}\sum_{j=1}^{n} b_{ij}\, x_i x_j$ ---- (5)

Since B is a symmetric matrix, we have, $b_{ii} = a_{ii}$ and $b_{ij} = b_{ji} = \frac{1}{2}(a_{ji} + a_{ij})$

That is, $\sum_{i=1}^{n}\sum_{j=1}^{n} a_{ij}\, x_i x_j = \sum_{i=1}^{n}\sum_{j=1}^{n} b_{ij}\, x_i x_j$ ----- (6)

Hence, $X'BX = \sum_{i=1}^{n}\sum_{j=1}^{n} a_{ij}\, x_i x_j$

Matrix of quadratic form:

If $Q = \sum_{i=1}^{n}\sum_{j=1}^{n} a_{ij}\, x_i x_j$ is a quadratic form in n −variables $x_1, x_2, \dots, x_n$ over a field $\mathbb{F}$ then there exists a unique symmetric matrix B such that

Atmiya University Rajkot

$$X'BX = \sum_{i=1}^{n}\sum_{j=1}^{n} a_{ij}\, x_i x_j$$

The symmetric matrix B is called a matrix of quadratic form.

Note that, in order to find the matrix of quadratic form $\sum_{i=1}^{n}\sum_{j=1}^{n} a_{ij}\, x_i x_j$, we will adjust the coefficients a_{ij} in such a way that its coefficients form a symmetric matrix.

Conversion of a Symmetric matrix into a Quadratic form:

Let $A = [a_{ij}]_{n\times n}$ be a symmetric matrix over a field $\mathbb{F} = \mathbb{R}$.

Let $X = \begin{bmatrix} x_1 \\ x_2 \\ x_3 \\ \dots \\ x_n \end{bmatrix}$ then the quadratic form of matrix $A$is given by

$$\boldsymbol{Q = X'AX} = [x_1, x_2, \dots, x_n]_{1\times n}[a_{ij}]_{n\times n}\begin{bmatrix} x_1 \\ x_2 \\ x_3 \\ \dots \\ x_n \end{bmatrix}_{n\times 1}$$

That is, $\boldsymbol{Q = X'AX} = \sum_{i=1}^{n}\sum_{j=1}^{n} a_{ij}\, x_i x_j$

Example – 1 Find the matrix corresponding to the following quadratic form,

$$\boldsymbol{Q = ax^2 + 2hxy + by^2}$$

Solution: The given quadratic form can be written as,
$Q = ax^2 + (h + h)xy + by^2$
$Q = ax^2 + (hxy + hyx) + by^2$
$Q = ax^2 + hxy + hyx + by^2$
Now, the coefficients of above quadratic form will form a matrix as follows,
$A = \begin{bmatrix} a & h \\ h & b \end{bmatrix}$, which is required matrix of the given quadratic form.
Note that here matrix A is symmetric.

Example – 2 Find the matrix corresponding to the following quadratic form,

$$\boldsymbol{Q = 2x^2 + 3y^2 - 5z^2 - 2xy + 6xz - 10yz}$$

Solution: The given quadratic form can be written as,
$Q = 2x^2 + 3y^2 + (-5)z^2 + (-1 - 1)xy + (3 + 3)xz + (-5 - 5)yz$
$Q = 2x^2 + 3y^2 + (-5)z^2 + (-xy - yx) + (3xz + 3zx) + (-5yz - 5zy)$

Atmiya University Rajkot

$Q = 2x^2 + (-1)xy + 3xz + (-1)yx + 3y^2 + (-5)yz + 3zx + (-5)zy + (-5)z^2$
Now, the coefficients of above quadratic form will form a matrix as follows,
$A = \begin{bmatrix} 2 & -1 & 3 \\ -1 & 3 & -5 \\ 3 & -5 & -5 \end{bmatrix}$, which is required matrix of the given quadratic form.
Note that here matrix A is symmetric.

Example – 3 Find the matrix corresponding to the following quadratic form,

$$\boldsymbol{Q = 2x_1^2 - 7x_3^2 + 4x_1x_2 - 6x_2x_3}$$

Solution: The given quadratic form can be written as,
$Q = 2x_1^2 + (-7)x_3^2 + (2+2)x_1x_2 + (-3-3)x_2x_3$
$Q = 2x_1^2 + (-7)x_3^2 + (2x_1x_2 + 2x_2x_1) + (-3x_2x_3 - 3x_3x_2)$
$Q = 2x_1^2 + 2x_1x_2 + 0x_1x_3 + 2x_2x_1 + 0x_2^2 + (-3)x_2x_3 + 0x_3x_1 + (-3)x_3x_2 + (-7)x_3^2$

Now, the coefficients of above quadratic form will form a matrix as follows,
$A = \begin{bmatrix} 2 & 2 & 0 \\ 2 & 0 & -3 \\ 0 & -3 & -7 \end{bmatrix}$, which is required matrix of the given quadratic form.
Note that here matrix A is symmetric.

Example – 4 Find the matrix corresponding to the following quadratic form,
$\boldsymbol{Q = x^2 + 2y^2 + 3z^2 + 4xy + 5yz + 6zx}$

Solution: $A = \begin{bmatrix} 1 & 2 & 3 \\ 2 & 2 & \frac{5}{2} \\ 3 & \frac{5}{2} & 3 \end{bmatrix}$

Example – 5 Find the matrix corresponding to the following quadratic form,
$\boldsymbol{Q = ax^2 + by^2 + cz^2 + 2hxy + 2fyz + 2gzx}$

Solution: $A = \begin{bmatrix} a & h & g \\ h & b & f \\ g & f & c \end{bmatrix}$

Example – 6 Find the matrix corresponding to the following quadratic form,
$\boldsymbol{Q = x_1^2 - 2x_2^2 + 4x_3^2 - 4x_4^2 - 2x_1x_2 + 3x_1x_4 + 4x_2x_3 - 5x_3x_4}$

Solution: $A = \begin{bmatrix} 1 & -1 & 0 & \frac{3}{2} \\ -1 & -2 & 2 & 0 \\ 0 & 2 & 4 & -\frac{5}{2} \\ \frac{3}{2} & 0 & -\frac{5}{2} & -4 \end{bmatrix}$

Atmiya University Rajkot

Example – 7 Find the matrix corresponding to the following quadratic form,
$\boldsymbol{Q = x_1^2 - 2x_2x_3 - x_3x_4}$

Solution:$A = \begin{bmatrix} 1 & 0 & 0 & 0 \\ 0 & 0 & -1 & 0 \\ 0 & -1 & 0 & -\frac{1}{2} \\ 0 & 0 & -\frac{1}{2} & 0 \end{bmatrix}$

Example – 8 Find the matrix corresponding to the following quadratic form,
$\boldsymbol{Q = x_1x_2 + x_2x_3 + x_3x_1 + x_1x_4 + x_2x_4 + x_3x_4}$

Solution:$A = \begin{bmatrix} 0 & \frac{1}{2} & \frac{1}{2} & \frac{1}{2} \\ \frac{1}{2} & 0 & \frac{1}{2} & \frac{1}{2} \\ \frac{1}{2} & \frac{1}{2} & 0 & \frac{1}{2} \\ \frac{1}{2} & \frac{1}{2} & \frac{1}{2} & 0 \end{bmatrix}$

Example – 9 Find the matrix corresponding to the following quadratic form,
$\boldsymbol{Q = (x_1 - x_2 + x_3)^2}$

Solution:$A = \begin{bmatrix} 1 & -1 & 1 \\ -1 & 1 & -1 \\ 1 & -1 & 1 \end{bmatrix}$

Example – 10 Find the matrix corresponding to the following quadratic form,
$\boldsymbol{Q = (x_1 + x_2)^2 - x_3^2}$

Solution:$A = \begin{bmatrix} 1 & 1 & 0 \\ 1 & 1 & 0 \\ 0 & 0 & -1 \end{bmatrix}$

Example – 11 Find the matrices of the following quadratic forms and verify that it can be written as matrix products $X'AX$.

$$\boldsymbol{Q = x_1^2 - 18x_1x_2 + 5x_2^2}$$

Solution: Given $Q = x_1^2 - 18x_1x_2 + 5x_2^2$
The given quadratic form can be written as,

$Q = x_1^2 + (-9 - 9)x_1x_2 + 5x_2^2$
$Q = x_1^2 + (-9)x_1x_2 + (-9)x_2x_1 + 5x_2^2$
The matrix corresponding to the given quadratic form can be expressed as,

Atmiya University Rajkot

$A = \begin{bmatrix} 1 & -9 \\ -9 & 5 \end{bmatrix}$

Which is required **symmetric matrix** of the given quadratic form.

Let $X = \begin{bmatrix} x_1 \\ x_2 \end{bmatrix}$ be the column matrix in variables x_1 and x_2 then $X' = [x_1 \quad x_2]$

Now, $X'AX = [x_1 \quad x_2] \begin{bmatrix} 1 & -9 \\ -9 & 5 \end{bmatrix} \begin{bmatrix} x_1 \\ x_2 \end{bmatrix}$

$$X'AX = [x_1 \quad x_2] \begin{bmatrix} x_1 - 9x_2 \\ -9x_1 + 5x_2 \end{bmatrix}$$

$X'AX = x_1(x_1 - 9x_2) + x_2(-9x_1 + 5x_2)$

$X'AX = x_1^2 - 9x_1x_2 - 9x_2x_1 + 5x_2^2$

$\boldsymbol{X'AX = x_1^2 - 18x_1x_2 + 5x_2^2}$

Hence verified.

Example – 12 Find the matrices of the following quadratic forms and verify that it can be written as matrix products $X'AX$.

$$\boldsymbol{Q = x_1^2 + 2x_2^2 - 5x_3^2 - x_1x_2 + 4x_2x_3 - 3x_3x_1}$$

Solution: Given $Q = x_1^2 + 2x_2^2 - 5x_3^2 - x_1x_2 + 4x_2x_3 - 3x_3x_1$

The given quadratic form can be written as,

$$Q = x_1^2 + 2x_2^2 + (-5)x_3^2 + \left(-\frac{1}{2} - \frac{1}{2}\right)x_1x_2 + (2+2)x_2x_3 + \left(-\frac{3}{2} - \frac{3}{2}\right)x_3x_1$$

$$Q = x_1^2 + \left(-\frac{1}{2}\right)x_1x_2 + \left(-\frac{3}{2}\right)x_1x_3 + \left(-\frac{1}{2}\right)x_2x_1 + 2x_2^2 + 2x_2x_3 + \left(-\frac{3}{2}\right)x_3x_1 + 2x_3x_2 + (-5)x_3^2$$

The matrix corresponding to the given quadratic form can be expressed as,

$$A = \begin{bmatrix} 1 & -\frac{1}{2} & -\frac{3}{2} \\ -\frac{1}{2} & 2 & 2 \\ -\frac{3}{2} & 2 & -5 \end{bmatrix}$$

Let $X = \begin{bmatrix} x_1 \\ x_2 \\ x_3 \end{bmatrix}$ be the column matrix in variables x_1, x_2 and x_3 then $X' = [x_1 \quad x_2 \quad x_3]$

Now, $X'AX = [x_1 \quad x_2 \quad x_3] \begin{bmatrix} 1 & -\frac{1}{2} & -\frac{3}{2} \\ -\frac{1}{2} & 2 & 2 \\ -\frac{3}{2} & 2 & -5 \end{bmatrix} \begin{bmatrix} x_1 \\ x_2 \\ x_3 \end{bmatrix}$

$$X'AX = [x_1 \quad x_2 \quad x_3] \begin{bmatrix} x_1 - \frac{1}{2}x_2 - \frac{3}{2}x_3 \\ -\frac{1}{2}x_1 + 2x_2 + 2x_3 \\ -\frac{3}{2}x_1 + 2x_2 - 5x_3 \end{bmatrix}$$

Atmiya University Rajkot

$X'AX = x_1\left(x_1 - \frac{1}{2}x_2 - \frac{3}{2}x_3\right) + x_2\left(-\frac{1}{2}x_1 + 2x_2 + 2x_3\right) + x_3\left(-\frac{3}{2}x_1 + 2x_2 - 5x_3\right)$

$X'AX = \left(x_1^2 - \frac{1}{2}x_1x_2 - \frac{3}{2}x_1x_3\right) + \left(-\frac{1}{2}x_2x_1 + 2x_2^2 + 2x_2x_3\right) + \left(-\frac{3}{2}x_3x_1 + 2x_3x_2 - 5x_3^2\right)$

$\boldsymbol{X'AX = x_1^2 + 2x_2^2 - 5x_3^2 - x_1x_2 + 4x_2x_3 - 3x_3x_1}$

Hence verified.

Example – 13 Find the quadratic form of the real symmetric matrix A.

Where $A = \begin{bmatrix} 2 & 2 & 0 \\ 2 & 0 & -3 \\ 0 & -3 & -7 \end{bmatrix}$

Solution: Let $X = \begin{bmatrix} x_1 \\ x_2 \\ x_3 \end{bmatrix}$ be the column matrix in variables x_1, x_2 and x_3 then $X' = [x_1 \quad x_2 \quad x_3]$

Now, $X'AX = [x_1 \quad x_2 \quad x_3]\begin{bmatrix} 2 & 2 & 0 \\ 2 & 0 & -3 \\ 0 & -3 & -7 \end{bmatrix}\begin{bmatrix} x_1 \\ x_2 \\ x_3 \end{bmatrix}$

$$X'AX = [x_1 \quad x_2 \quad x_3]\begin{bmatrix} 2x_1 + 2x_2 + 0x_3 \\ 2x_1 + 0x_2 - 3x_3 \\ 0x_1 - 3x_2 - 7x_3 \end{bmatrix}$$

$X'AX = x_1(2x_1 + 2x_2) + x_2(2x_1 - 3x_3) + x_3(-3x_2 - 7x_3)$

$X'AX = (2x_1^2 + 2x_1x_2) + (2x_2x_1 - 3x_2x_3) + (-3x_3x_2 - 7x_3^2)$

$\boldsymbol{X'AX = 2x_1^2 - 7x_3^2 + 4x_1x_2 - 6x_2x_3}$

Which is required quadratic form of given real symmetric matrix.

Example – 14 Find the quadratic form corresponding to symmetric matrix A.
Where $A = diag(a_1, a_2, a_3, \dots, a_n)$.

Solution:$\boldsymbol{X'AX = a_1x_1^2 + a_2x_2^2 + a_3x_3^2 + \cdots + a_nx_2^2}$

Example – 15 Find the matrices of the following quadratic forms and verify that it can be written as matrix products $X'AX$. $\boldsymbol{Q = (x_1 - x_2 + x_3)^2}$

Example – 16 Write down the quadratic forms corresponding to the following symmetric matrices.$A = \begin{bmatrix} 0 & 1 & 2 & 3 \\ 1 & 2 & 3 & 4 \\ 2 & 3 & 4 & 5 \\ 3 & 4 & 5 & 6 \end{bmatrix}$

Solution:

$\boldsymbol{X'AX = 2x_2^2 + 4x_3^2 + 6x_4^2 + 2x_1x_2 + 4x_1x_3 + 6x_1x_4 + 6x_2x_3 + 8x_2x_4 + 10x_3x_4}$

Remarks: Let$Q = X'AX$ be a real quadratic form in n −variables $x_1, x_2, \dots, x_n$ and λ be the Eigen values of real symmetric matrix A then,

Atmiya University Rajkot

- ★ Quadratic form Q is **positive definite** if and only if all the Eigen values of A are **positive.**
- ★ Quadratic form Q is **negative definite** if and only if all the Eigen values of A are **negative.**
- ★ Quadratic form Q is **positive semi – definite** if and only if all the Eigen values of A are **non – negative.**
- ★ Quadratic form Q is **negative semi – definite** if and only if all the Eigen values of A are **non – positive.**
- ★ Quadratic form Q is **indefinite** if and only if all the Eigen values of A are **positive as well as negative.**

Example – 1 Prove that the quadratic form $Q = x^2 + 4y^2 + z^2 - 4xy - 4yz + 2zx$ is positive semi – definite.
Solution: Given $Q = x^2 + 4y^2 + z^2 - 4xy - 4yz + 2zx$
The given quadratic form can be written as,

$Q = x^2 + 4y^2 + z^2 + (-2-2)xy + (-2-2)yz + (1+1)zx$
$Q = x^2 + (-2xy) + xz + (-2yx) + 4y^2 + (-2yz) + zx + (-2zy) + z^2$
The matrix corresponding to the given quadratic form can be expressed as,

$$A = \begin{bmatrix} 1 & -2 & 1 \\ -2 & 4 & -2 \\ 1 & -2 & 1 \end{bmatrix}$$

Now to find the Eigen values λ, the characteristic equation is,

$$|A - \lambda I| = 0$$

$$\begin{vmatrix} 1-\lambda & -2 & 1 \\ -2 & 4-\lambda & -2 \\ 1 & -2 & 1-\lambda \end{vmatrix} = 0$$

$(1-\lambda)[(4-\lambda)(1-\lambda) - 4] + 2[(-2)(1-\lambda) - (-2)] + 1[4 - (4-\lambda)] = 0$
$(1-\lambda)[\lambda^2 - 5\lambda + 4 - 4] + 2[-2 + 2\lambda + 2] + 1[4 - 4 + \lambda] = 0$
$\lambda^2(6-\lambda) = 0$
$\boldsymbol{\lambda = 0, 0, 6}$

Since the Eigen values of A are positive and two Eigen values are zero, the given quadratic form is **positive semi – definite.**

Example – 2 Determine the definiteness of the quadratic form
$Q = 6x^2 + 3y^2 + 3z^2 - 4xy - 2yz + 4zx.$
Solution:$\boldsymbol{\lambda = 2, 2, 8}$
Since the Eigen values of A are positive, the given quadratic form is **positive definite**.

Atmiya University Rajkot

Example – 3 Determine the definiteness of the quadratic form
$Q = x_1^2 + 5x_2^2 + x_3^2 + 2x_2x_3 + 6x_3x_1 + 2x_1x_2.$
Solution:$\boldsymbol{\lambda = -2, 3, 6}$
Since the Eigen values of A are positive as well as negative, the given quadratic form is **indefinite**.

Example – 4 Determine the definiteness of the quadratic form
$Q = -3x_1^2 - 3x_2^2 - 3x_3^2 - 2x_1x_2 - 2x_3x_1 + 2x_2x_3$
Solution:$\boldsymbol{\lambda = -1, -4, -4}$
Since the Eigen values of A are negative, the given quadratic form is**negativedefinite**.

Example – 5 Determine the definiteness of the quadratic form
$Q = 2x_1^2 + x_2^2 - 3x_3^2 + 12x_1x_2 - 4x_3x_1 - 8x_2x_3$
Solution:$\boldsymbol{\lambda = -3, -6, 9}$
Since the Eigen values of A are positive as well as negative, the given quadratic form is **indefinite**.

Example – 6 Determine the definiteness of the quadratic form
$Q = x_1^2 + 2x_2^2 + 3x_3^2 + 2x_1x_2 - 2x_3x_1 + 2x_2x_3$
Solution:$\boldsymbol{\lambda = -1, -1, 8}$
Since the Eigen values of A are positive as well as negative, the given quadratic form is **indefinite**.

Remarks (Recall):

- ★ If x an Eigen vector of a matrix A corresponding to the Eigen value λ then $k\lambda$ is also an Eigen vector of A corresponding to same Eigen value λ, where k is any nonzero scalar.
- ★ If x is an Eigen vector of a matrix A then x can not correspond to more than one Eigen value of A.
- ★ The Eigen vectors corresponding to distinct Eigen values of a matrix are linearly independent.
- ★ If two or more Eigen values are equal then the corresponding Eigen vectors may or may not be linearly independent.
- ★ The Eigen vectors corresponding to distinct Eigen values of a real symmetric matrix are orthogonal.

Atmiya University
Rajkot

Example – 7 Find Eigen values and Eigen vectors of the following matrix associated with quadratic form Q.

$$A = \begin{bmatrix} 4 & 6 & 6 \\ 1 & 3 & 2 \\ -1 & -4 & -3 \end{bmatrix}$$

Solution: Eigen values $\boldsymbol{\lambda = -1, 1, 4}$

$\boldsymbol{x_1 = (-6, -2, 7), x_2 = (0, 1, -1) \& x_3 = (3, 1, -1)}$ are Eigen vectors of A corresponding to Eigen values $\lambda = -1,1,4$ respectively.

Example – 8 Find Eigen values and Eigen vectors of the following matrix associated with quadratic form Q.

$$A = \begin{bmatrix} 1 & 0 & -1 \\ 1 & 2 & 1 \\ 2 & 2 & 3 \end{bmatrix}$$

Solution: Eigen values $\boldsymbol{\lambda = 1, 2, 3}$

$\boldsymbol{x_1 = (1, -1, 0), x_2 = (-2, 1, 2) \& x_3 = (-1, 1, 2)}$ are Eigen vectors of A corresponding to Eigen values $\lambda = 1,2,3$ respectively.

Example – 9 Find Eigen values and Eigen vectors of the following matrix associated with quadratic form Q.

$$A = \begin{bmatrix} 8 & -6 & 2 \\ -6 & 7 & -4 \\ 2 & -4 & 3 \end{bmatrix}$$

Solution: Eigen values $\boldsymbol{\lambda = 0, 3, 15}$

$\boldsymbol{x_1 = (1, 2, 2), x_2 = (2, 1, -2) \& x_3 = (2, -2, 1)}$ are Eigen vectors of A corresponding to Eigen values $\lambda = 0,3,15$ respectively.

Similarity of Matrices

If A & B are two square matrices of order n then B is said to be **similar** to A, if there exists a non – singular matrix P such that $B = P^{-1}AP$

Diagonalization:

Matrix A is said to be diagonalizable if it is similar to a diagonal matrix.

Matrix A is diagonalizable if there exists an invertible matrix P such that $P^{-1}AP = D$.

Atmiya University Rajkot

Where ***D* is a diagonal matrix**, it is also known as **spectral matrix**. ***P* is known as modal matrix.**

Note:

- If the Eigen values of $n \times n$ matrix are all distinct then it is always similar to a diagonal matrix.
- An $n \times n$matrix is diagonalizable if and only if it possesses n linearly independent Eigen vectors.
- If A is similar to a diagonal matrix D, the diagonal elements of D are the Eigen values of A.

Orthogonally Similar Matrices

If A and B are two square matrices of order n then B is said to be orthogonally similar to A, if there exists an orthogonal matrix P such that

$$B = P^{-1}AP$$

Since P is orthogonal $P^{-1} = P^T$

$$\Rightarrow B = P^{-1}AP = P^TAP$$

Note:

Every real symmetric matrix is orthogonally similar to a diagonal matrix with real elements.

A real symmetric matrix of order n has n mutually orthogonal real Eigen vectors.

Any two Eigen vectors corresponding to two distinct Eigen values of a real symmetric matrix are orthogonal.

To find the orthogonal matrix P, each element of the Eigen vector is divided by its norm (length).

Example – 1 Determine the diagonal matrix D orthogonally similar to real symmetric matrix A. Also find modal matrix P. Where $A = \begin{bmatrix} 3 & -1 & 1 \\ -1 & 5 & -1 \\ 1 & -1 & 3 \end{bmatrix}$

Solution: Here $A = \begin{bmatrix} 3 & -1 & 1 \\ -1 & 5 & -1 \\ 1 & -1 & 3 \end{bmatrix}$

To find the Eigen value characteristic equation is, $|A - \lambda I| = 0$

$$\begin{vmatrix} 3-\lambda & -1 & 1 \\ -1 & 5-\lambda & -1 \\ 1 & -1 & 3-\lambda \end{vmatrix} = 0$$

Atmiya University Rajkot

$$(3-\lambda)[(5-\lambda)(3-\lambda)-(1)]+1[(-1)(3-\lambda)-(-1)]+1[1-(5-\lambda)]=0$$

$$(3-\lambda)[15-8\lambda+\lambda^2-1]+1[-3+\lambda+1]+1[1-5+\lambda]=0$$

$$(3-\lambda)[14-8\lambda+\lambda^2]+1[\lambda-2]+1[\lambda-4]=0$$

$$42-24\lambda+3\lambda^2-14\lambda+8\lambda^2-\lambda^3+\lambda-2+\lambda-4=0$$

$$-\lambda^3+11\lambda^2-36\lambda+36=0$$

$$\lambda^3-11\lambda^2+36\lambda-36=0$$

By solving above equation we obtain, $\boldsymbol{\lambda=2,3,6}$

Nowto find Eigen vector of A for $\lambda=2$,

$$[A-\lambda I]X=0$$

$$\begin{bmatrix}1 & -1 & 1\\ -1 & 3 & -1\\ 1 & -1 & 1\end{bmatrix}\begin{bmatrix}x\\ y\\ z\end{bmatrix}=\begin{bmatrix}0\\ 0\\ 0\end{bmatrix}$$

$x-y+z=0$
$-x+3y-z=0$
By Cramer's rule,

$$\frac{x}{\begin{vmatrix}-1 & 1\\ 3 & -1\end{vmatrix}}=-\frac{y}{\begin{vmatrix}1 & 1\\ -1 & -1\end{vmatrix}}=\frac{z}{\begin{vmatrix}1 & -1\\ -1 & 3\end{vmatrix}}$$

$$\frac{x}{-2}=\frac{y}{0}=\frac{z}{2}$$

$\frac{x}{-1}=\frac{y}{0}=\frac{z}{1}=t$ (Say)

Thus, the Eigen vector of A corresponding to $\lambda=2$ is, $X=\begin{bmatrix}-t\\ 0\\ t\end{bmatrix}=t\begin{bmatrix}-1\\ 0\\ 1\end{bmatrix}=tx_1$

Where x_1 is a linearly independent Eigen vector corresponding to $\lambda=2$,

Nowto find Eigen vector of A for $\lambda=3$,

$$[A-\lambda I]X=0$$

$$\begin{bmatrix}0 & -1 & 1\\ -1 & 2 & -1\\ 1 & -1 & 0\end{bmatrix}\begin{bmatrix}x\\ y\\ z\end{bmatrix}=\begin{bmatrix}0\\ 0\\ 0\end{bmatrix}$$

$0x-y+z=0$
$-x+2y-z=0$
$x-y+0z=0$
By Cramer's rule,

$$\frac{x}{\begin{vmatrix}-1 & 1\\ 2 & -1\end{vmatrix}}=-\frac{y}{\begin{vmatrix}0 & 1\\ -1 & -1\end{vmatrix}}=\frac{z}{\begin{vmatrix}0 & -1\\ -1 & 2\end{vmatrix}}$$

Atmiya University Rajkot

$$\frac{x}{-1} = \frac{y}{-1} = \frac{z}{-1}$$

$\frac{x}{1} = \frac{y}{1} = \frac{z}{1} = t$ (Say)

Thus, the Eigen vector of A corresponding to $\lambda = 3$ is, $X = \begin{bmatrix} t \\ t \\ t \end{bmatrix} = t \begin{bmatrix} 1 \\ 1 \\ 1 \end{bmatrix} = tx_2$

Where x_2 is a linearly independent Eigen vector corresponding to $\lambda = 3$.

Nowto find Eigen vector of A for $\lambda = 6$,

$$[A - \lambda I]X = 0$$

$$\begin{bmatrix} -3 & -1 & 1 \\ -1 & -1 & -1 \\ 1 & -1 & -3 \end{bmatrix} \begin{bmatrix} x \\ y \\ z \end{bmatrix} = \begin{bmatrix} 0 \\ 0 \\ 0 \end{bmatrix}$$

$-3x - y + z = 0$
$-x - y - z = 0$
$x - y - 3z = 0$
By Cramer's rule,

$$\frac{x}{\begin{vmatrix} -1 & 1 \\ -1 & -1 \end{vmatrix}} = -\frac{y}{\begin{vmatrix} -3 & 1 \\ -1 & -1 \end{vmatrix}} = \frac{z}{\begin{vmatrix} -3 & -1 \\ -1 & -1 \end{vmatrix}}$$

$$\frac{x}{2} = \frac{y}{-4} = \frac{z}{2}$$

$\frac{x}{1} = \frac{y}{-2} = \frac{z}{1} = t$ (Say)

Thus, the Eigen vector of A corresponding to $\lambda = 3$ is, $X = \begin{bmatrix} t \\ -2t \\ t \end{bmatrix} = t \begin{bmatrix} 1 \\ -2 \\ 1 \end{bmatrix} = tx_3$

Where x_3 is a linearly independent Eigen vector corresponding to $\lambda = 6$.

Length of the Eigen vector $x_1 = \sqrt{(-1)^2 + 0 + 1^2} = \sqrt{2}$

Length of the Eigen vector $x_2 = \sqrt{1^2 + 1^2 + 1^2} = \sqrt{3}$

Length of the Eigen vector $x_3 = \sqrt{1^2 + (-2)^2 + 1^2} = \sqrt{6}$

The normalized Eigen vectors are, $x_1 = \begin{bmatrix} -\frac{1}{\sqrt{2}} \\ 0 \\ \frac{1}{\sqrt{2}} \end{bmatrix}$, $x_2 = \begin{bmatrix} \frac{1}{\sqrt{3}} \\ \frac{1}{\sqrt{3}} \\ \frac{1}{\sqrt{3}} \end{bmatrix}$, $x_3 = \begin{bmatrix} \frac{1}{\sqrt{6}} \\ -\frac{2}{\sqrt{6}} \\ \frac{1}{\sqrt{6}} \end{bmatrix}$

Modal matrix P has normalized Eigen vectors as its column vectors,

Atmiya University Rajkot

$$P = \begin{bmatrix} -\frac{1}{\sqrt{2}} & \frac{1}{\sqrt{3}} & \frac{1}{\sqrt{6}} \\ 0 & \frac{1}{\sqrt{3}} & -\frac{2}{\sqrt{6}} \\ \frac{1}{\sqrt{2}} & \frac{1}{\sqrt{3}} & \frac{1}{\sqrt{6}} \end{bmatrix}$$

Diagonal matrix D has Eigen values as its diagonal matrix

$$D = \begin{bmatrix} 2 & 0 & 0 \\ 0 & 3 & 0 \\ 0 & 0 & 6 \end{bmatrix}$$

Now $P^{-1}AP = P^{T}AP = \begin{bmatrix} -\frac{1}{\sqrt{2}} & 0 & \frac{1}{\sqrt{2}} \\ \frac{1}{\sqrt{3}} & \frac{1}{\sqrt{3}} & \frac{1}{\sqrt{3}} \\ \frac{1}{\sqrt{6}} & \frac{-2}{\sqrt{6}} & \frac{1}{\sqrt{6}} \end{bmatrix} \begin{bmatrix} 3 & -1 & 1 \\ -1 & 5 & -1 \\ 1 & -1 & 3 \end{bmatrix} \begin{bmatrix} -\frac{1}{\sqrt{2}} & \frac{1}{\sqrt{3}} & \frac{1}{\sqrt{6}} \\ 0 & \frac{1}{\sqrt{3}} & -\frac{2}{\sqrt{6}} \\ \frac{1}{\sqrt{2}} & \frac{1}{\sqrt{3}} & \frac{1}{\sqrt{6}} \end{bmatrix}$

$$P^{-1}AP = P^{T}AP = \begin{bmatrix} -\frac{1}{\sqrt{2}} & 0 & \frac{1}{\sqrt{2}} \\ \frac{1}{\sqrt{3}} & \frac{1}{\sqrt{3}} & \frac{1}{\sqrt{3}} \\ \frac{1}{\sqrt{6}} & \frac{-2}{\sqrt{6}} & \frac{1}{\sqrt{6}} \end{bmatrix} \begin{bmatrix} -\sqrt{2} & \sqrt{3} & \sqrt{6} \\ 0 & \sqrt{3} & -2\sqrt{6} \\ \sqrt{2} & \sqrt{3} & \sqrt{6} \end{bmatrix}$$

$$P^{-1}AP = P^{T}AP = \begin{bmatrix} 2 & 0 & 0 \\ 0 & 3 & 0 \\ 0 & 0 & 6 \end{bmatrix} = D$$

Hence, given matrix ***A* is diagonalizable.**

Example – 2 Determine the diagonal matrix D orthogonally similar to real symmetric matrix A. Also find modal matrix P. Where $A = \begin{bmatrix} 8 & -6 & 2 \\ -6 & 7 & -4 \\ 2 & -4 & 3 \end{bmatrix}$

Solution: Here $A = \begin{bmatrix} 8 & -6 & 2 \\ -6 & 7 & -4 \\ 2 & -4 & 3 \end{bmatrix}$

To find the Eigen value characteristic equation is, $|A - \lambda I| = 0$

$$\begin{vmatrix} 8-\lambda & -6 & 2 \\ -6 & 7-\lambda & -4 \\ 2 & -4 & 3-\lambda \end{vmatrix} = 0$$

Atmiya University Rajkot

$\lambda^3 - 18\lambda^2 + 45\lambda = 0$

By solving above equation we obtain, $\boldsymbol{\lambda = 0, 3, 15}$

Nowto find Eigen vector of A for $\lambda = 0$,

$$[A - \lambda I]X = 0$$

$$\begin{bmatrix} 8 & -6 & 2 \\ -6 & 7 & -4 \\ 2 & -4 & 3 \end{bmatrix} \begin{bmatrix} x \\ y \\ z \end{bmatrix} = \begin{bmatrix} 0 \\ 0 \\ 0 \end{bmatrix}$$

$8x - 6y + 2z = 0$
$-6x + 7y - 4z = 0$
$2x - 4y + 3z = 0$

By Cramer's rule,

$$\frac{x}{\begin{vmatrix} -6 & 2 \\ 7 & -4 \end{vmatrix}} = -\frac{y}{\begin{vmatrix} 8 & 2 \\ -6 & -4 \end{vmatrix}} = \frac{z}{\begin{vmatrix} 8 & -6 \\ -6 & 7 \end{vmatrix}}$$

$$\frac{x}{10} = \frac{y}{20} = \frac{z}{20}$$

$\frac{x}{1} = \frac{y}{2} = \frac{z}{2} = t$ (Say)

Thus, the Eigen vector of A corresponding to $\lambda = 0$ is, $X = \begin{bmatrix} t \\ 2t \\ 2t \end{bmatrix} = t \begin{bmatrix} 1 \\ 2 \\ 2 \end{bmatrix} = tx_1$

Where x_1 is a linearly independent Eigen vector corresponding to $\lambda = 0$,

Nowto find Eigen vector of A for $\lambda = 3$,

$$[A - \lambda I]X = 0$$

$$\begin{bmatrix} 5 & -6 & 2 \\ -6 & 4 & -4 \\ 2 & -4 & 0 \end{bmatrix} \begin{bmatrix} x \\ y \\ z \end{bmatrix} = \begin{bmatrix} 0 \\ 0 \\ 0 \end{bmatrix}$$

$5x - 6y + 2z = 0$
$-6x + 4y - 4z = 0$
$2x - 4y + 0z = 0$
By Cramer's rule,

$$\frac{x}{\begin{vmatrix} -6 & 2 \\ 4 & -4 \end{vmatrix}} = -\frac{y}{\begin{vmatrix} 5 & 2 \\ -6 & -4 \end{vmatrix}} = \frac{z}{\begin{vmatrix} 5 & -6 \\ -6 & 4 \end{vmatrix}}$$

$$\frac{x}{16} = \frac{y}{8} = \frac{z}{-16}$$

$\frac{x}{2} = \frac{y}{1} = \frac{z}{-2} = t$ (Say)

Atmiya University Rajkot

Thus, the Eigen vector of A corresponding to $\lambda = 3$ is, $X = \begin{bmatrix} 2t \\ t \\ -2t \end{bmatrix} = t \begin{bmatrix} 2 \\ 1 \\ -2 \end{bmatrix} = tx_2$

Where x_2 is a linearly independent Eigen vector corresponding to $\lambda = 3$.

Nowto find Eigen vector of A for $\lambda = 15$,

$$[A - \lambda I]X = 0$$

$$\begin{bmatrix} -7 & -6 & 2 \\ -6 & -8 & -4 \\ 2 & -4 & -12 \end{bmatrix} \begin{bmatrix} x \\ y \\ z \end{bmatrix} = \begin{bmatrix} 0 \\ 0 \\ 0 \end{bmatrix}$$

$-7x - 6y + 2z = 0$
$-6x - 8y - 4z = 0$
$2x - 4y - 12z = 0$
By Cramer's rule,

$$\frac{x}{\begin{vmatrix} -6 & 2 \\ -8 & -4 \end{vmatrix}} = -\frac{y}{\begin{vmatrix} -7 & 2 \\ -6 & -4 \end{vmatrix}} = \frac{z}{\begin{vmatrix} -7 & -6 \\ -6 & -8 \end{vmatrix}}$$

$$\frac{x}{40} = \frac{y}{-40} = \frac{z}{20}$$

$\frac{x}{2} = \frac{y}{-2} = \frac{z}{1} = t$ (Say)

Thus, the Eigen vector of A corresponding to $\lambda = 3$ is, $X = \begin{bmatrix} 2t \\ -2t \\ t \end{bmatrix} = t \begin{bmatrix} 2 \\ -2 \\ 1 \end{bmatrix} = tx_3$

Where x_3 is a linearly independent Eigen vector corresponding to $\lambda = 15$.

Length of the Eigen vector $x_1 = \sqrt{1^2 + 2^2 + 2^2} = 3$

Length of the Eigen vector $x_2 = \sqrt{2^2 + 1^2 + (-2)^2} = 3$

Length of the Eigen vector $x_3 = \sqrt{2^2 + (-2)^2 + 1^2} = 3$

The normalized Eigen vectors are, $x_1 = \begin{bmatrix} \frac{1}{3} \\ \frac{2}{3} \\ \frac{2}{3} \end{bmatrix}$, $x_2 = \begin{bmatrix} \frac{2}{3} \\ \frac{1}{3} \\ -\frac{2}{3} \end{bmatrix}$, $x_3 = \begin{bmatrix} \frac{2}{3} \\ -\frac{2}{3} \\ \frac{1}{3} \end{bmatrix}$

Modal matrix P has normalized Eigen vectors as its column vectors,

Atmiya University Rajkot

$$P = \begin{bmatrix} \frac{1}{3} & \frac{2}{3} & \frac{2}{3} \\ \frac{2}{3} & \frac{1}{3} & -\frac{2}{3} \\ \frac{2}{3} & -\frac{2}{3} & \frac{1}{3} \end{bmatrix}$$

Diagonal matrix D has Eigen values as its diagonal matrix

$$D = \begin{bmatrix} 0 & 0 & 0 \\ 0 & 3 & 0 \\ 0 & 0 & 15 \end{bmatrix}$$

Now $P^{-1}AP = P^{T}AP = \begin{bmatrix} \frac{1}{3} & \frac{2}{3} & \frac{2}{3} \\ \frac{2}{3} & \frac{1}{3} & -\frac{2}{3} \\ \frac{2}{3} & -\frac{2}{3} & \frac{1}{3} \end{bmatrix} \begin{bmatrix} 8 & -6 & 2 \\ -6 & 7 & -4 \\ 2 & -4 & 3 \end{bmatrix} \begin{bmatrix} \frac{1}{3} & \frac{2}{3} & \frac{2}{3} \\ \frac{2}{3} & \frac{1}{3} & -\frac{2}{3} \\ \frac{2}{3} & -\frac{2}{3} & \frac{1}{3} \end{bmatrix}$

$$P^{-1}AP = P^{T}AP = \begin{bmatrix} \frac{1}{3} & \frac{2}{3} & \frac{2}{3} \\ \frac{2}{3} & \frac{1}{3} & -\frac{2}{3} \\ \frac{2}{3} & -\frac{2}{3} & \frac{1}{3} \end{bmatrix} \begin{bmatrix} 0 & 2 & 10 \\ 0 & 1 & -10 \\ 0 & -2 & 5 \end{bmatrix}$$

$$P^{-1}AP = P^{T}AP = \begin{bmatrix} 0 & 0 & 0 \\ 0 & 3 & 0 \\ 0 & 0 & 15 \end{bmatrix} = D$$

Hence, given matrix ***A* is diagonalizable.**

Atmiya University
Rajkot

What is Design

- Design is a creative planning process that leads to useful products and systems.
- There are no perfect designs.
- Design requirements are made by criteria and constraints.

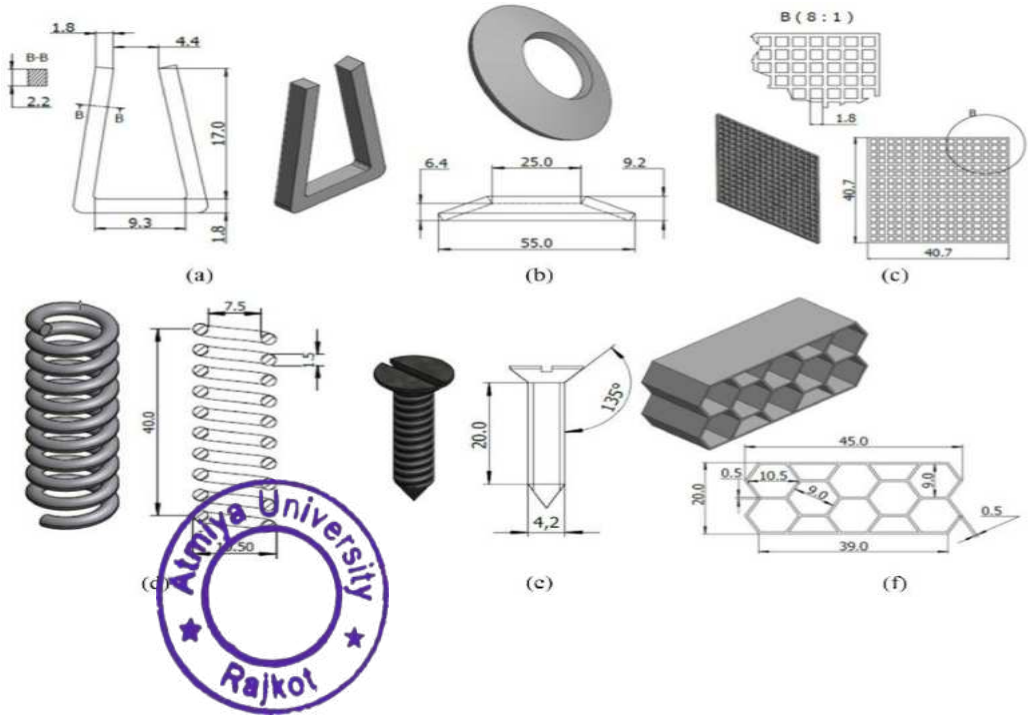

Atmiya University Rajkot

Introduction to Machine Design

- The subject Machine Design is the creation of new and better machines and improving the existing ones.
- A new or better machine is one which is more economical in the overall cost of production and operation.
- The process of design is a long and time consuming one. From the study of existing ideas, a new idea has to be conceived.
- The idea is then studied keeping in mind its commercial success and given shape and form in the form of drawings.
- In the preparation of these drawings, care must be taken of the availability of resources in money, in men and in materials required for the successful completion of the new idea into an actual reality.

Atmiya University
Rajkot

Good Design

- Design is everywhere: from your favourite video game to the shape of your shoes, everything you use has been thought, designed, tested, and probably redesigned to offer you a quality user experience.
- Good Design is,

1. Innovative
2. Makes Product useful
3. Aesthetic
4. Makes a product understandable
5. Unobtrustive
6. Honest
7. Long lasting
8. Thorough to the last detail
9. Environmentally friendly
10. As little design as possible

Atmiya University Rajkot

Safe Design

- Safe design is a process defined as the integration of hazard identification and risk assessment methods early in the design process to eliminate or minimise the risks of injury throughout the life of the product being designed.
- It encompasses all design including facilities, hardware, systems, equipment, products, tooling, materials, layout and configuration.
- **for example:**

1. Designing a machine with protective guarding that will enable safe operation, whilst also ensuring that the machine can be installed, maintained and disposed of safely.
2. Designing a building with a lift for occupants, where the design also includes sufficient space and safe access to the lift well or machine room for maintenance work.

Atmiya University
Rajkot

Principles of Safe Design

- The five principles that impact on achieving a safe design are described below.

1. **Principle 1: Persons with control:-** The people who make decisions should be competent and understand that their decisions will affect the design of products, facilities or processes, which means they can promote health and safety at the source.
2. **Principle 2: Product life cycle:-** Safe design applies to every stage in the life cycle from conception through to disposal. It involves eliminating hazards or minimising risks as early in the life cycle as possible.
3. **Principle 3: Systematic risk management:-** The consistent application of hazard identification, risk assessment and risk control processes is required to achieve safe design.
4. **Principle 4: Safe design knowledge and capability:-** Should be either demonstrated or acquired by persons with control over design.
5. **Principle 5: Information transfer:-** Effective communication and documentation of design and risk control information between all persons involved in the phases of the life cycle is essential for the safe design approach**.**

Atmiya University Rajkot

What is the Design Process?

- The design process is a purposeful method of planning practical solutions to problems.
- The design process is never final; there are always multiple solutions to a problem.
- Powerful approach to problem solving is flexible enough to work in almost any situation.
- The design process is influenced by requirements called criteria and constraints.

Atmiya University
Rajkot

9 Steps to the Design Process

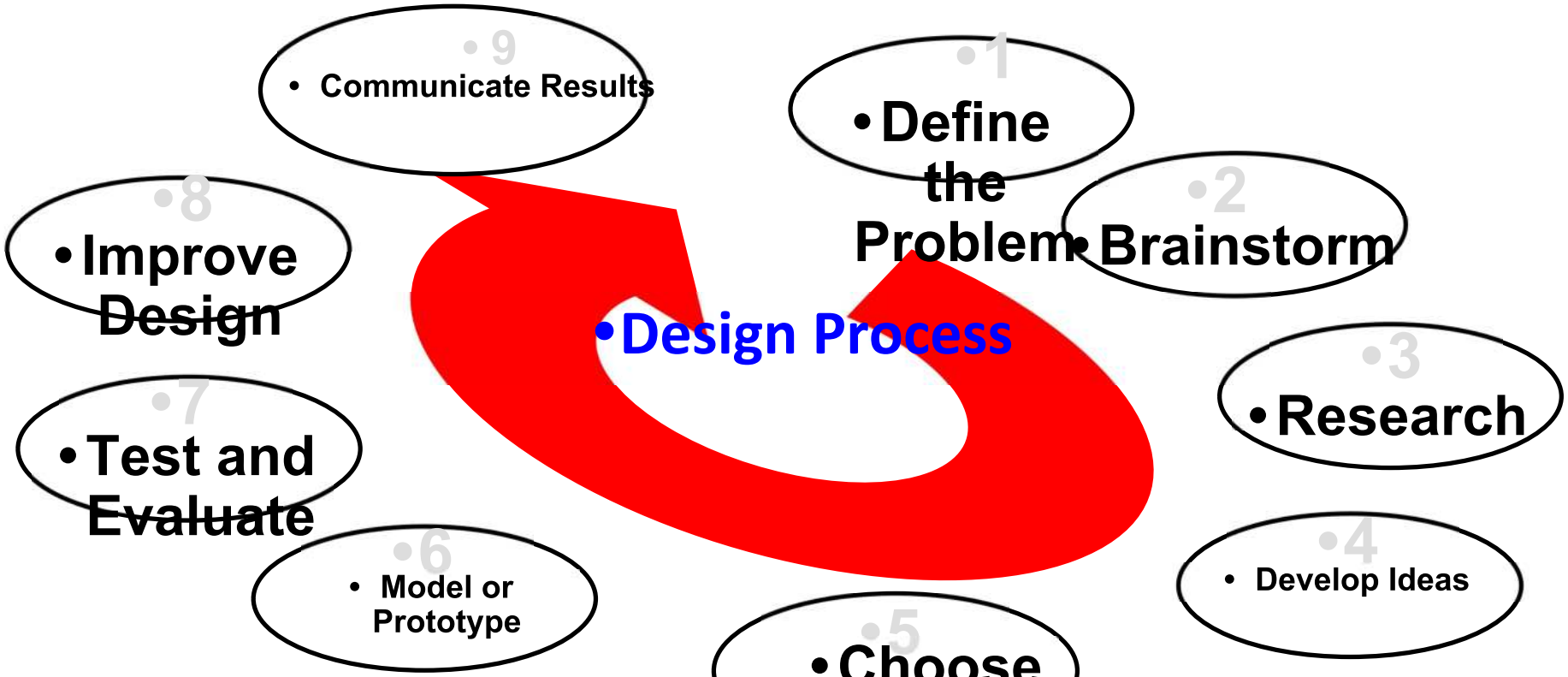

Atmiya University Rajkot

Step One: Define the Problem

- Defining the problem is like conducting detective work. You must examine the evidence and form some conclusions.

Atmiya University
Rajkot

Step Two: Brainstorm

- Brainstorming involves bringing a group of people together to generate many different ideas.
- All ideas are considered- None are criticized.

Atmiya University
Rajkot

Step Three: Research

- Research may require going to the library, using computer databases, writing letters, performing experiments, and asking questions.

Atmiya University
Rajkot

Step Four: Develop Ideas

- Develop multiple ideas that will solve the problem and meet the requirements. The alternatives may all be quite diverse.
- Criteria:

✔ How will the solution actually work?

✔ What materials should I use?

✔ What should the product look like so that people will buy it?

- Constraints:

✔ Will it be completed by the deadline?

✔ What size should it be?

Atmiya University Rajkot

Step Five: Choose The Best Idea

- Decide on an idea that best meets the criteria, fits within the constraints, and has the least amount of negative characteristics.
- List the strengths and weaknesses of each alternative.
- Optimize for better performance/safety

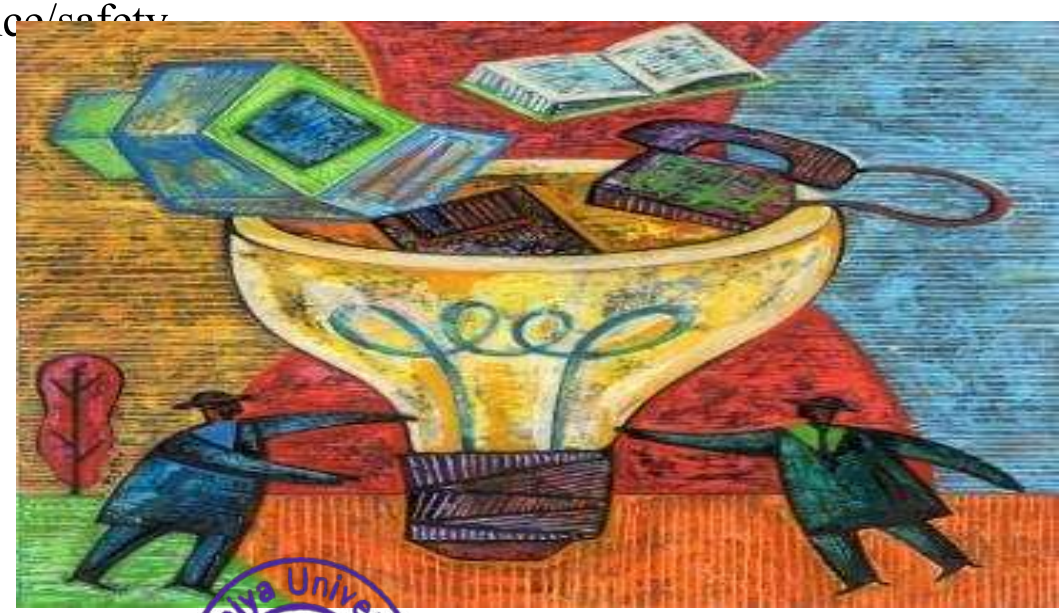

Atmiya University
Rajkot

Step Six: Model or Prototype

- Model building is used to gather additional information and test design ideas.
- **Realistic drawings or renderings** help you visualize what the solution will look like in real life.
- **Scale models or mock-ups** are small, accurate representations of the final product.
- **3D CAD (computer aided design)** can show objects in action.
- A **prototype** is a working model, it looks and functions just like the finished product.

Atmiya University
Rajkot

Step Seven: Test and Evaluate

- Models of design solutions must be tested and important questions must be answered during the evaluation.

Is it safe for people and the environment?

Is it comfortable?

Is it affordable?

Is it aesthetically pleasing (does it look good)?

Will it last as long as it needs to?

Does it meet the criteria and constraints?

Does it work?

Atmiya University
Rajkot

Step Eight: Improve Design

- After studying all test data and evaluating design solutions, you may need to make changes.
- This is the time to improve design before production starts.

Atmiya University
Rajkot

Step Nine: Communicate Results

- Share your design ideas with others to prove the design is worthy of manufacturing.

- Poster Drawings
- Charts
- Prototypes
- PowerPoint presentation
- Reports
- Discussion

Atmiya University
Rajkot

Types of engineering design

Adaptive design:-

- The designer's work is concerned with adaptation of existing designs.
- This type of design needs no special knowledge or skill and can be attempted by designers of ordinary technical training.
- The designer only makes minor alternation or modification in the existing designs of the product.

Development design:-

- This type of design needs considerable scientific training and design ability in order to modify the existing designs into a new idea by adopting a new material or different method of manufacture.
- In this case, though the designer starts from the existing design, but the final
- product may differ quite markedly from the original product.

Atmiya University Rajkot

New design:-

- This type of design needs lot of research, technical ability and creative thinking.
- Only those designers who have personal qualities of a sufficiently high order can take up the work of a new design.

The designs, depending upon the methods used, may be classified as follows :

- **Rational design:-**This type of design depends upon mathematical formulae of principle of mechanics.
- **Empirical design:-**This type of design depends upon empirical formulae based on the practice and past experience.
- **Industrial design:-**This type of design depends upon the production aspects to manufacture any machine component in the industry.
- **Optimum design:-**It is the best design for the given objective function under the specified constraints. It may be achieved by minimising the undesirable effects.

Atmiya University Rajkot

- **System design:-** It is the design of any complex mechanical system like a motor car.
- **Element design:-** It is the design of any element of the mechanical system like piston, crankshaft, connecting rod, etc.
- **Computer aided design:-**This type of design depends upon the use of computer systems to assist in the creation, modification, analysis and optimisation of a design.

Atmiya University
Rajkot

BASIC PROCEDURE OF MACHINE DESIGN

- The basic procedure of machine design consists of a step-by-step approach from given specifications about the functional requirements of a product to the complete description in the form of drawings of the final product.

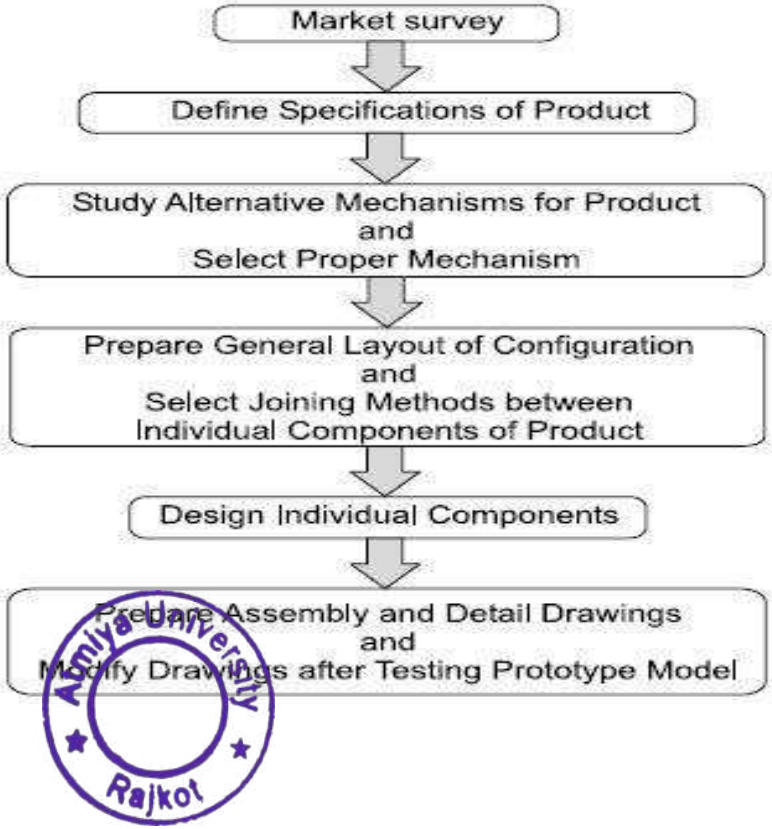

Atmiya University Rajkot

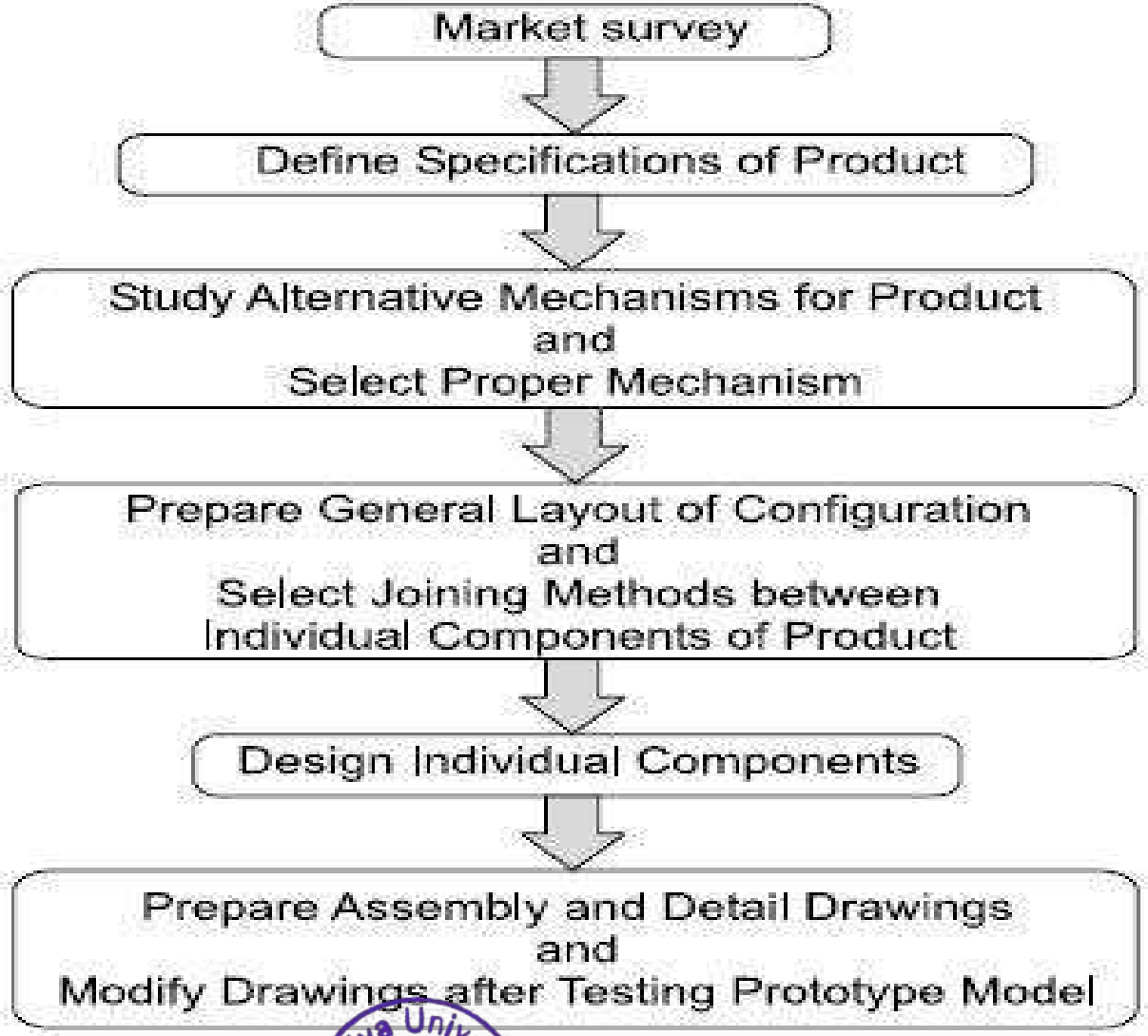

Figure:- The Design Process

Atmiya University Rajkot

Step 1: Product Specifications

- The first step consists of preparing a complete list of the requirements of the product.
- The requirements include the output capacity of the machine, and its service life, cost and reliability.
- In some cases, the overall dimensions and weight of the product are specified.
- For example, while designing a scooter, the list of specifications will be as follows:

(i) Fuel consumption = 40 km/l

(ii) Maximum speed = 85 km/hr

(iii) Carrying capacity = two persons with 10 kg luggage

(iv) Overall dimensions

- Width = 700 mm
- Length = 1750 mm
- Height = 1000 mm

(v) Weight = 95 kg

(vi) Cost = Rs 40000 to Rs 45000

Atmiya University Rajkot

Step 2: Selection of Mechanism

- After careful study of the requirements, the designer prepares rough sketches of different possible mechanisms for the product.
- For example, while designing a press the following mechanisms are possible:

1. A mechanism involving the crank and connecting rod, converting the rotary motion of the electric motor into the reciprocating motion of the punch.
2. A mechanism consisting of a hydraulic cylinder, piston and valves which is a costly configuration but highly efficient.

- The alternative mechanisms are compare with each other and also with the mechanism of the products that are available in the market.
- An approximate estimation of the cost of each alternative configuration is made and compared with the cost of existing products.
- While selecting the final configuration, the designer should consider whether the raw materials and standard parts required for making the product are available in the market.
- Depending upon the cost competitiveness, availability of raw materials and manufacturing facility, the best possible mechanism is selected for the product.

Atmiya University Rajkot

Step 3: Layout of Configuration

- The next step in a design procedure is to prepare a block diagram showing the general layout of the selected configuration.
- In this step, the designer specifies the joining methods, such as riveting, bolting or welding to connect the individual components.
- Rough sketches of shapes of the individual parts are prepared.

Atmiya University
Rajkot

Step 4: Design of Individual Components

- The design of individual components or machine elements is an important step in a design process.
- It consists of the following stages:

1. Determine the forces acting on the component.
2. Select proper material for the component depending upon the functional requirements such as strength, rigidity, hardness and wear resistance.
3. Determine the mode of failure for the component.
4. Determine the geometric dimensions of the component using a suitable factor of safety and modify the dimensions from assembly and manufacturing considerations.

- This stage involves detailed stress and deflection analysis.

Atmiya University
Rajkot

Step 5: Preparation of Drawings

- The last stage in a design process is to prepare drawings of the assembly and the individual components.
- On these drawings, the material of the component, its dimensions, tolerances, surface finish grades and machining symbols are specified.
- A prototype model is prepared for the product and thoroughly tested before finalising the assembly drawings.

Atmiya University
Rajkot

BASIC REQUIREMENTS OF MACHINE ELEMENTS

- The broad objective of designing a machine element is to ensure that it preserves its operating capacity during the stipulated service life with minimum manufacturing and operating costs.
- In order to achieve this objective, the machine element should satisfy the following basic requirements:

1. Strength
2. Rigidity
3. Wear Resistance
4. Minimum Dimensions and Weight
5. Manufacturability
6. Safety
7. Conformance to Standards
8. Reliability
9. Maintainability
10. Minimum: Life-cycle Cost

Atmiya University Rajkot

Atmiya University Rajkot

BASIC PROCEDURE FOR DESIGN OF MACHINE ELEMENTS

- Design of machine elements is the most important step in the complete procedure of machine design.
- In order to ensure the basic requirements of machine elements, calculations are carried out to find out the dimensions of the machine elements.
- These calculations form an integral part of the design of machine elements.
- The basic procedure of the design of machine elements consists of the following steps.

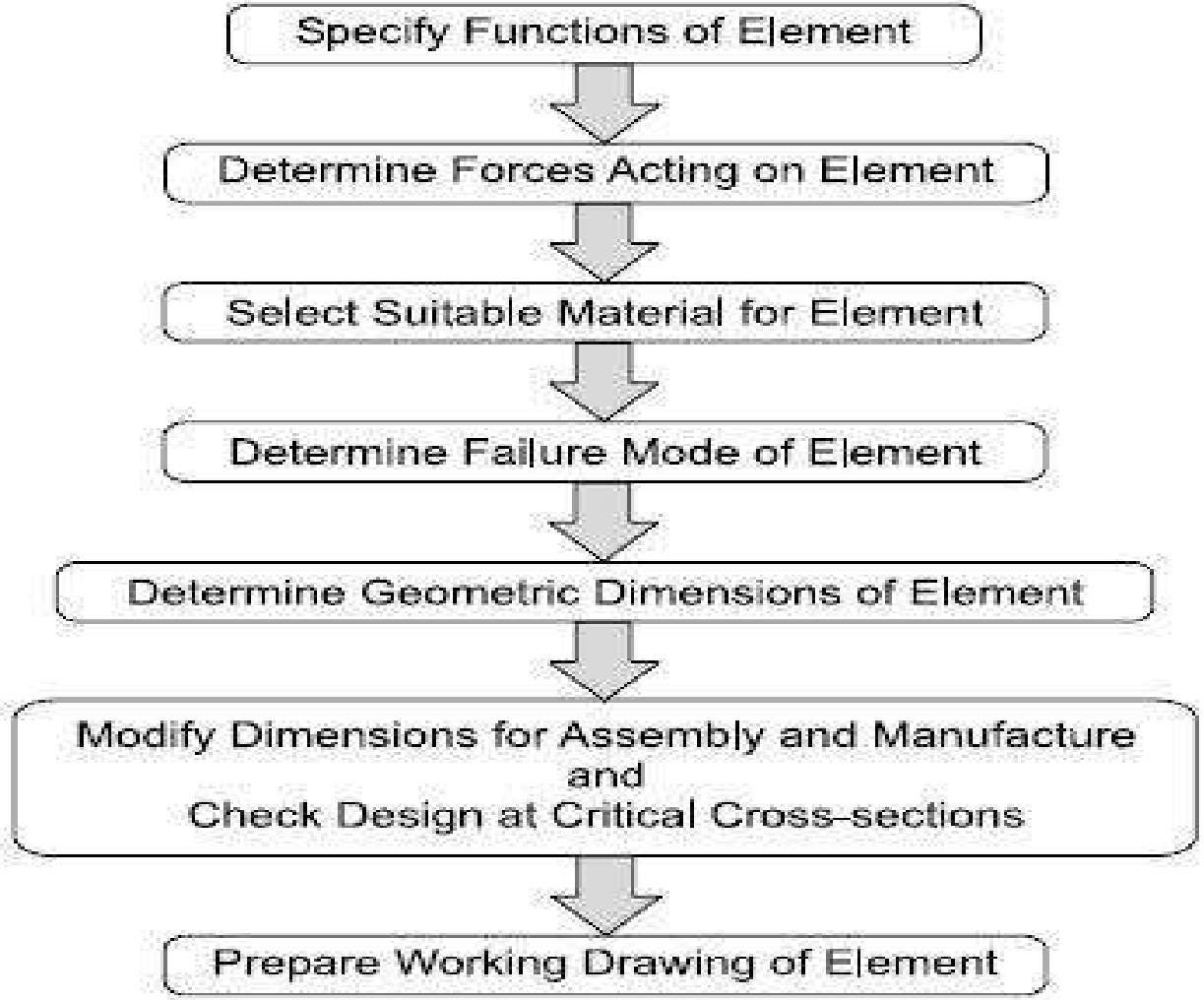

Atmiya University Rajkot

Step 1: Specification of Function

- The design of machine elements begins with the specification of the functions of the element.
- The functions of some machine elements are as follows:

1. Shaft:- To transmit power or torque to other rotating parts.
2. Bearing:- To support the rotating shaft and confine its motion.
3. Spring in Clock:- To store and release the energy.
4. Gear:- To transfer motion and torque between machine components in mechanical devices.

Atmiya University
Rajkot

Step 2: Determination of Forces

- A free-body diagram of forces is constructed to determine the forces acting on different parts of the machine.
- The external and internal forces are acting on a machine element.

(i) The external force due to energy, power or torque transmitted by the machine part, often called 'useful' load.

(ii) Static force due to deadweight of the machine part.

(iii) Force due to frictional resistance.

(iv) Inertia force due to change in linear or angular velocity.

(v) Centrifugal force due to change in direction of velocity.

(vi) Force due to thermal gradient or variation in temperature.

(vii) Force set up during manufacturing the part resulting in residual stresses.

(viii) Force due to particular shape of the part such as stress concentration due to abrupt change in cross-section.

Atmiya University Rajkot

Step 3: Selection of Material

- Four basic factors, which are considered in selecting the material, are

1. Availability
2. Cost
3. Mechanical properties
4. Manufacturing considerations

Atmiya University
Rajkot

Step 4: Failure Criterion

- Before finding out the dimensions of the component, it is necessary to know the type of failure that the component may fail when put into service.
- The machine component is said to have 'failed' when it is unable to perform its functions satisfactorily.
- Three basic types of failure are as follows:

1. Failure by elastic deflection
2. Failure by general yielding
3. Failure by fracture

Atmiya University Rajkot

Step 5: Determination of Dimensions

- The shape of the machine element depends on two factors:-

1. The operating conditions
2. Shape of the adjoining machine element

- The geometric dimensions of the component are determined on the basis of failure criterion.
- The dimensions are determined on the basis of allowable stress or deflection.
- Determination of geometric dimensions is an important step while designing machine elements.

Atmiya University
Rajkot

Step 6: Design Modifications

- The geometric dimensions of the machine element are modified from assembly and manufacturing considerations.
- The process is continued till the desired values of operating capacity, factor of safety and stresses at critical cross-sections are obtained.

Atmiya University
Rajkot

Step 7: Working Drawing

- The last step in the design of machine elements is to prepare a working drawing of the machine element showing dimensions, tolerances, surface finish grades, geometric tolerances and special production requirements like heat treatment.
- The working drawing must be clear, concise and complete.
- It must have enough views and cross sections to show all details.
- Every dimension must be given.
- All dimensions that are important for proper assembly and interchangeability must be provided with tolerances.

Atmiya University
Rajkot

Fundamentals of Units

- The units used to measure fundamental quantities are called fundamental units. i.e. the unit of fundamental quantity is called fundamental unit. It does not depend on any other unit.
- There are seven fundamental (basic) physical quantities: Length, mass, time, temperature, electric current, luminous intensity and amount of a substance and their units are fundamental units.
- Following are the fundamental quantities with their units and symbol of units.

Fundamental (basic) quantity	Fundamental unit (S.I.)	Symbol of unit
1. Length	metre	m
2. Mass	kilogram	Kg
3. Time	second	s
4. Temperature	kelvin	K
5. Electric current	ampere	A
6. Luminous intensity	candela	cd
7. Amount of a substance	mole	mol

Atmiya University Rajkot

- The units of derived quantities which depend on fundamental units for their measurement are called derived units.
- Following are some derived quantities with their units and symbol of unit.

Sr. No.	Derived physical quantity	Derived unit (S.I.)	Symbol of unit
1.	Area	square metre	m^2
2.	Volume	cubic metre	m^3
3.	Velocity	metre/sec	m/s
4.	Acceleration	metre/sec^2	m/s^2
5.	Force	newton	N
6.	Pressure	newton/metre^2	N/m^2
7.	Density	kilogram/metre^3	kg/m^3
8.	Speed	metre/sec	m/s
9.	Work	joule	J

Atmiya University Rajkot

Simple Stress & Strain

- **Stress:- Stress is the internal resistance offered by the body to the external load applied to it per unit cross sectional area.**

or

- **Stress is defined as the internal resistance offered by the body against deformation.**
- Stresses are normal to the plane to which they act and are tensile or compressive in nature.
-
- Unit

$$\sigma = \frac{P}{A}$$

σ : Stress (tensile or compressive)
P : Axial load
A : Cross sectional area

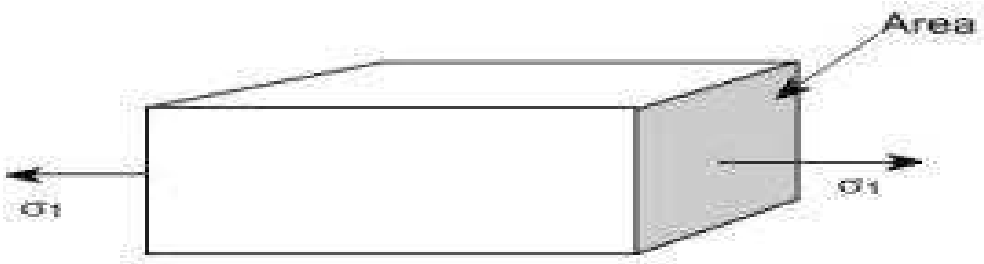

Atmiya University Rajkot

Types of Stress

- **Tensile stress: -**The stress induced in a body, when subjected to two equal and opposite pull, as a result of which there is an increase in length, is known as tensile stress. Tensile stress tends to elongate the body.

Atmiya University
Rajkot

- **Compressive Stress:-**The stress induced in a body, when subjected to two equal and opposites pushes, as a result of which there is decrease in length, is known as compressive stress.

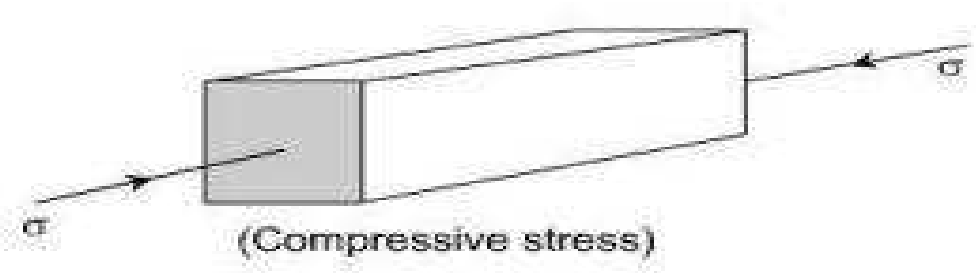

- **Shear Stress:-** A shear stress, symbolized by the Greek letter tau, (τ), results when a member is subjected to a force that is parallel to the surface.

or

- Shear stress is the stress state caused by the combined energy of a pair of opposing forces acting along parallel lines of action through the material. It is the stress caused by faces of the material sliding relative to one another.

Atmiya University Rajkot

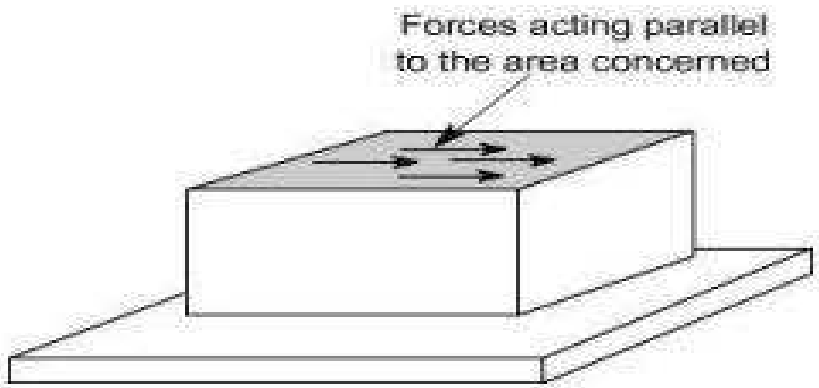

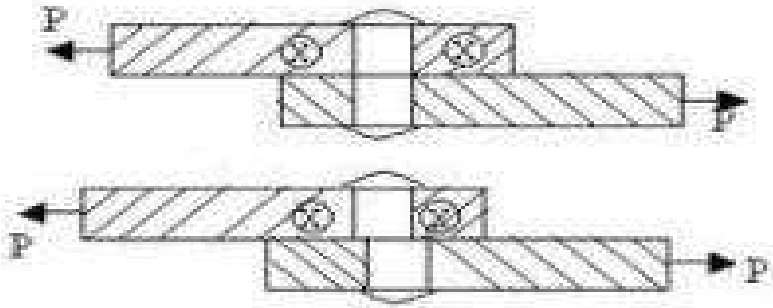

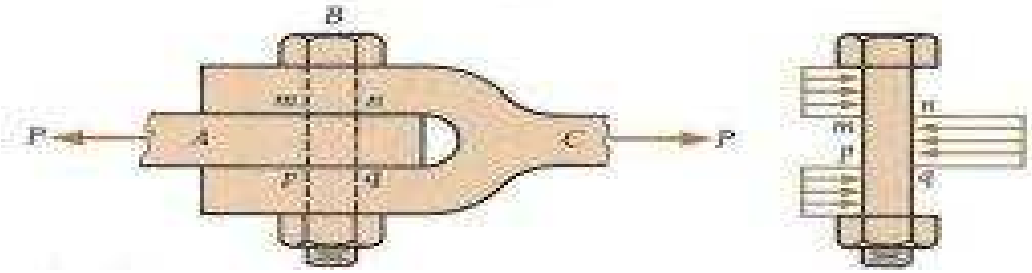

- **Bending Stress**:- Bending stress is the normal stress that is induced at a point in a body subjected to loads that cause it to bend.

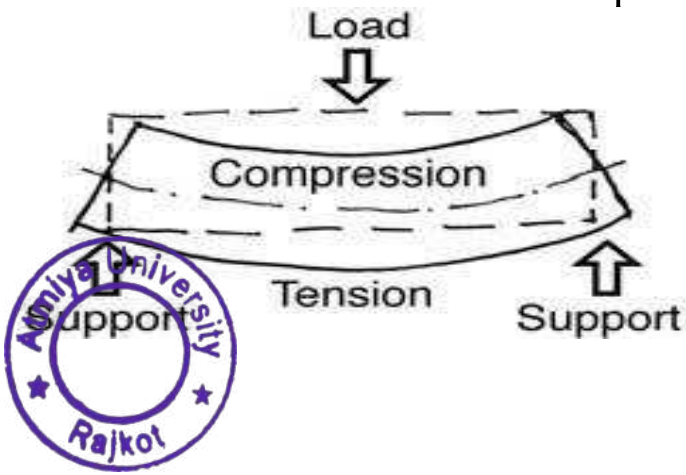

Atmiya University Rajkot

Strain

- Strain is defined as the ratio of change in length to the original length.

$$e = \frac{\delta l}{l}$$

$$\text{Strain } (\varepsilon) = \frac{\text{Change of length } (\delta l)}{\text{Original length } (l)}$$

e : Compressive or tensile strain

δl : Change in length

l : Original length

- Strain is the deformation produced by stress.
- Strain is the deformation per unit length.

Atmiya University Rajkot

Types of Strain

- **Tensile strain:-** Let initial length of bar before applied load be , when tensile load P is applied. Let the bar be elongated by

$$\text{Tensile strain } (\varepsilon) = \frac{\text{Extension in length } (\delta l)}{\text{Original length } (l)}$$

-

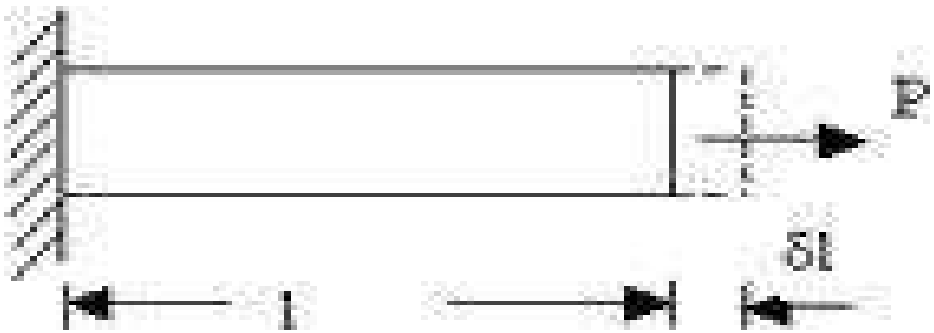

Atmiya University
Rajkot

Types of Strain

- **Compressive strain:-** Let initial length of bar before applied load be, when compressive load P is applied. Its length gets decrease by,

$$\text{Compressive Strain } (\varepsilon) = \frac{\text{Shortening in length } (\delta l)}{\text{Original length } (l)}$$

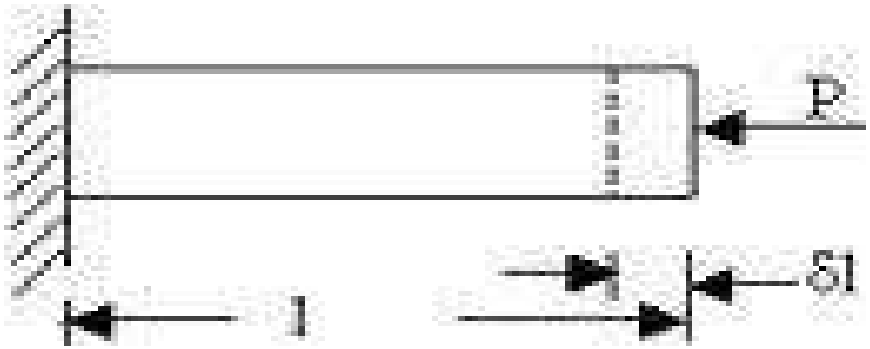

- **Volumetric Strain:-** It is defined as the change in volume upon original volume.

$$e_v = \frac{\text{Change in volume}}{\text{Original volume}} = \frac{\delta V}{V}$$

Atmiya University Rajkot

Types of Strain

- **Shear Strain:-** The shear strain is defined as the change in the angle between the originally perpendicular edges of the rectangular or square element of the material, upon application of the shear stress.
- Shear strain is measured by angle through which the body distorts.

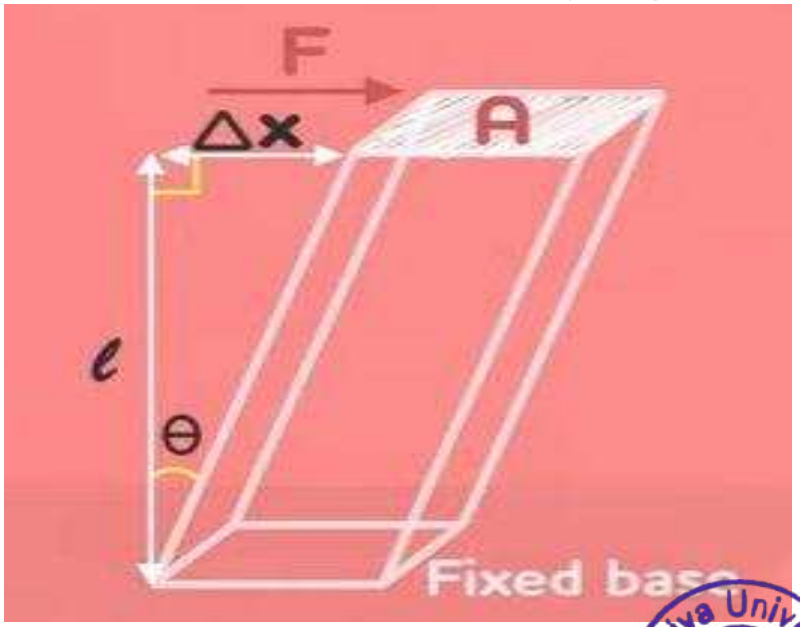

$$\text{Shear Strain} = \tan\theta = \frac{\text{Opposite}}{\text{Adjacent}} = \frac{\Delta x}{\ell}$$

Atmiya University Rajkot

Stress–Strain Curve

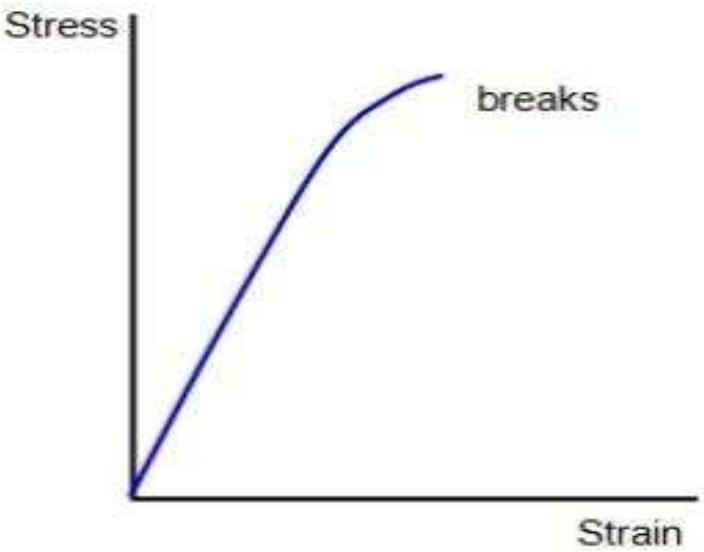

BRITTLE MATERIAL

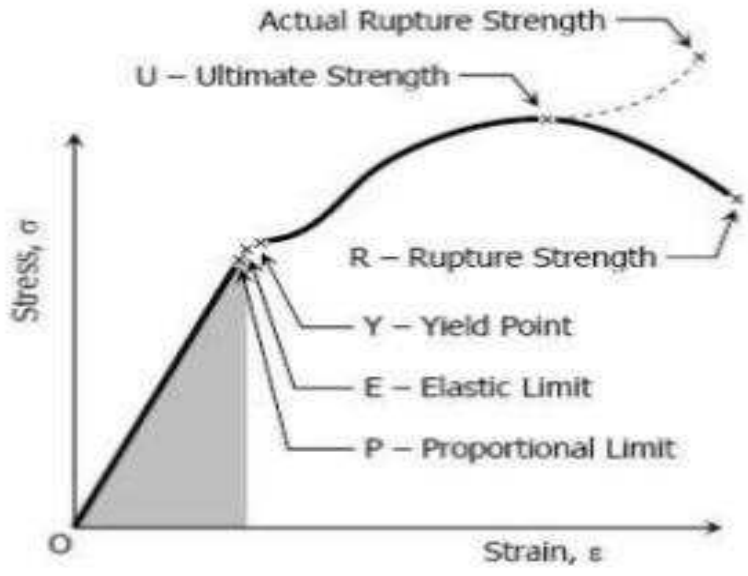

DUCTILE MATERIAL

Atmiya University
Rajkot

Mechanical Properties of Engineering Material

- **Strength:-**The strength of a material is its ability to withstand an applied load without failure. Failure is the state of the material in which it is no longer able to bear the applied load.
- **Elasticity:-** The property of a material by the virtue of which it returns to its original shape and size after removal of the applied load is called elasticity. The materials which follow such behaviour are said to be elastic.
- **Plasticity:-** The property of a material by the virtue of which it undergoes permanent deformations, even after removal of the applied loads is known as plasticity. The materials which are not elastic are said to be plastic.
- **Stiffness or rigidity:-** It is defined as the ability of the material to resist deformation under the action of an external load.
- **Resilience:-** It is defined as the ability of the material to absorb energy when deformed elastically and to release this energy when unloaded.

Atmiya University Rajkot

Mechanical Properties of Engineering Material

- **Toughness :-** It is defined as the ability of the material to absorb energy before fracture takes place.
- **Ductility:-** It is defined as the ability of a material to deform to a greater extent before the sign of crack, when it is subjected to tensile force.
- **Malleability:-** It is defined as the ability of a material to deform to a greater extent before the sign of crack, when it is subjected to compressive force.
- **Brittleness:-** It is the property of a material which shows negligible plastic deformation before fracture takes place.
- **Hardness:-** It is defined as the resistance of the material to penetration or permanent deformation.

Atmiya University Rajkot

Atmiya University
Rajkot

INTRODUCTION
TO
THERMODYNAMICS

Hardik N. Chauhan

Assistant Professor

Department of Mechanical Engineering

Faculty of Engineering & Technology

Atmiya University

hardik.chauhan@atmiyauni.ac.in

2022-2023

Atmiya University Rajkot

Unit -II: Concept of Thermodynamics

1. Need Scope & application of Thermodynamics in Industry
2. Important Terminologies used in Thermodynamics
3. First & Second Law of Thermodynamics
4. Gas laws, Combine Gas law, Specific heats of gas & Non-flow Process
5. Classification of engine
6. Terminologies used in IC engine
7. 4-Stroke SI & CI Engine
8. Numerical based on IC engine*
9. Concept of Heat Transfer *
10. Concept of Refrigerator & Air Conditioning *
11. Concept of Pump & Compressor *

Atmiya University
Rajkot

Prime mover

A prime mover is defined as a device which converts energy from natural sources into mechanical energy or useful work (shaft power). Examples of prime movers are: Wind turbine, steam turbine, water turbine, I.C. Engine, etc.

Sources of energy

Prime movers use various natural sources of energy like fuel, water energy, atom, biomass, wind etc.

1. **Fuel:** When fuel is burnt, heat energy is generated. Amount of heat generated by burning of fuel depends upon calorific value of that fuel. By using heat engine, the heat energy is converted into mechanical energy (shaft power). Various types of fuels are coal, petrol, diesel, gas etc.
2. **Water Energy:** Water stored at high elevation contains potential energy. When water starts flowing, potential energy gets converted to kinetic energy. Hydraulic turbine is a prime mover which converts kinetic energy of flowing water into mechanical energy. For example water stored in dam contains potential energy.
3. **Atoms (Nuclear Energy):** Heat energy produced by the fission (nucleus is divided into two or more fragments) or fusion (two lighter atomic nuclei fuse to form a heavier nucleus) of atoms may be used to produce heat. This heat is used to produce shaft power by heat engines.
4. **Non-conventional Energy Sources:** These energy resources replace themselves naturally in a relatively short time and therefore will always be available. Examples of these resources are solar energy, wind energy, tidal energy, bio energy, solid wastes etc. Almost all non-conventional energy resources offer pollution free environment.

Types of prime movers

The prime mover can be classified according to the sources of energy utilized. The classification of prime movers is shown in fig. 1.2.

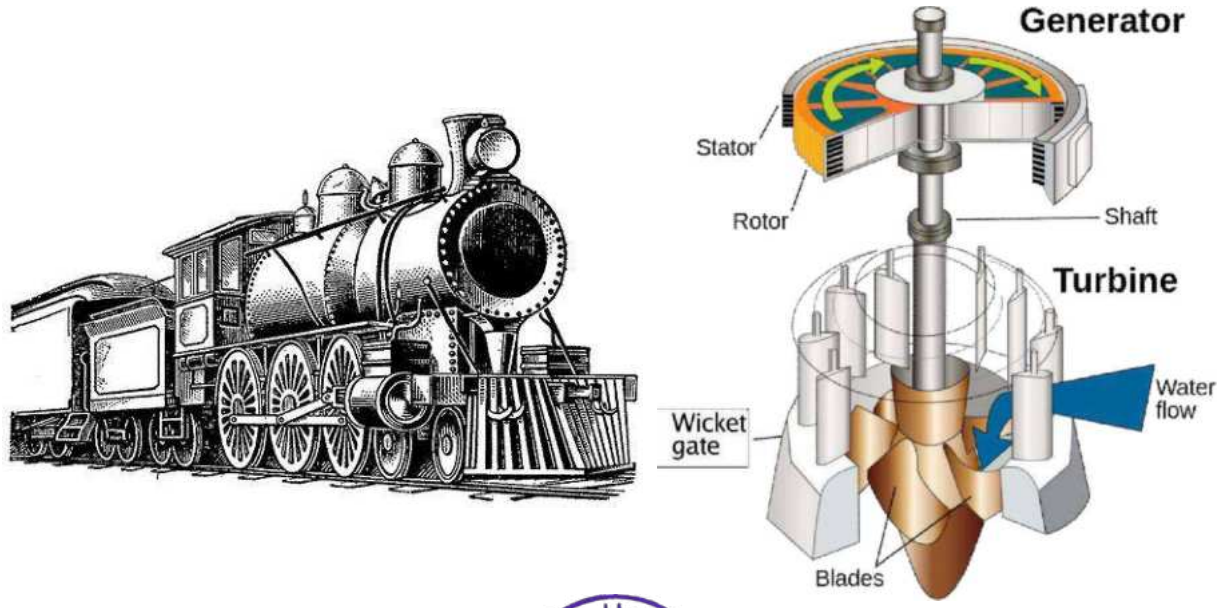

Fig 1.1 Examples of Prime mover (Steam engine and water turbine)

Atmiya University Rajkot

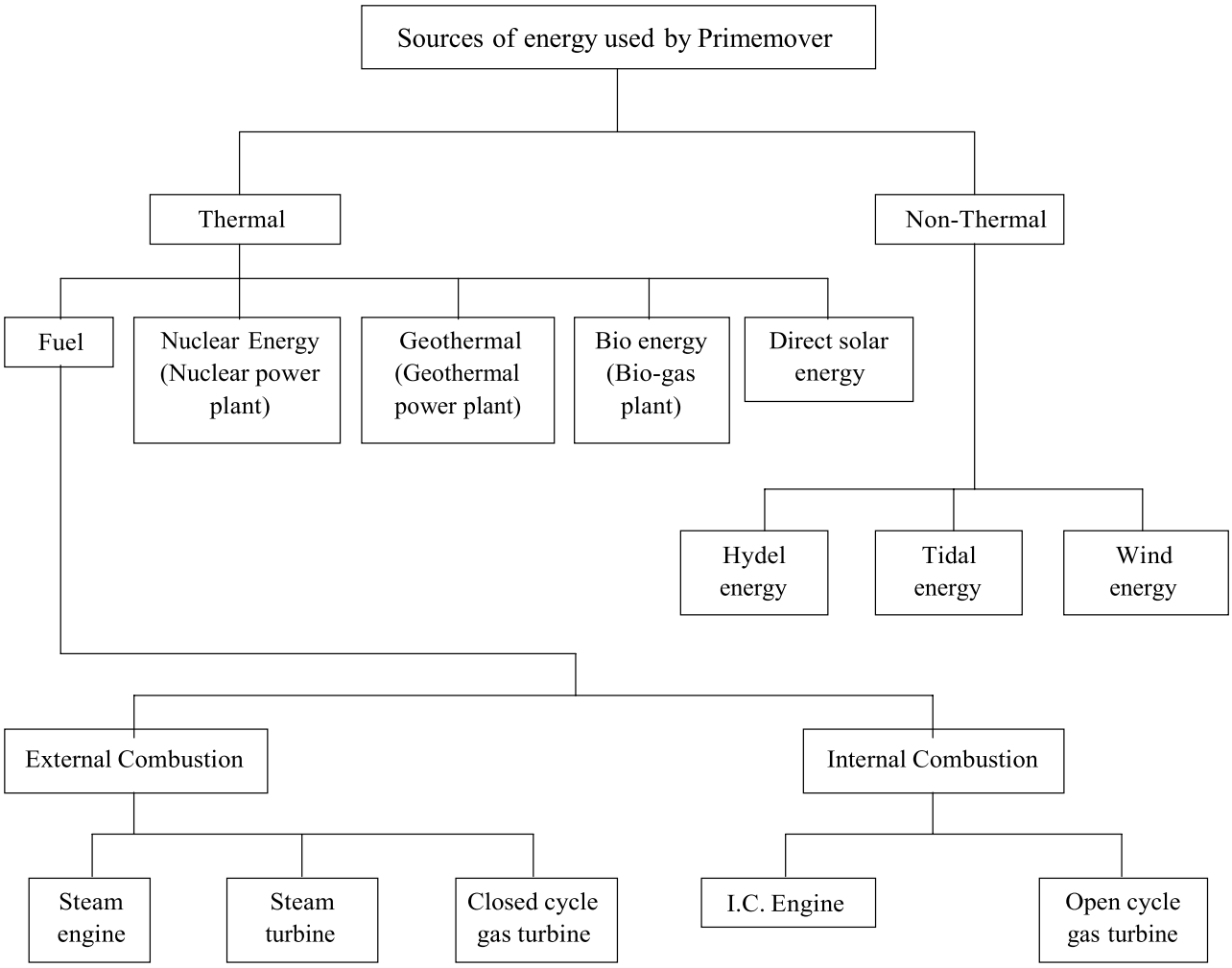

Fig. 1.2 Classification of prime movers

Basic Definitions

Mass

It is quantity of matter contained in a body. It does not depend upon gravitational force. The fundamental unit of mass is the Kilogram (kg).

Weight

Weight is the force exerted by gravity. Weight of body is dependent upon gravitational force, so it is not constant.

Weight = Mass x Gravitational acceleration

$$W = m \times g$$

Atmiya University
Rajkot

Force

It is push or pull acting on a body which changes or tends to change the state of rest or uniform motion of the body.

As per Newton's second law of motion

Force a acceleration

$$F = m \times a$$

In SI unit (International system), unit of mass is kg and unit of acceleration is m/s^2 and unit of the force is Newton (N).

When m = 1 kg, and a = 1 m/s^2 then F = 1 N.

1 N: When unit mass is given unit acceleration then the force produced is 1 N.

Pressure

It is the force exerted by fluid (liquid or gas) on unit area. It is a property of fluid.

$$Pressure = \frac{Force}{Area} = \frac{N}{m^2}$$

The unit of pressure is known as Pascal (Pa) or N/m^2

1 Pa = 1 N/m^2

Other commonly used units of pressure are:

1 kPa (Kilo Pascal) = 10^3 Pa

1 Mpa (Mega Pascal) = 10^6 Pa

1 bar = 10^5 Pa

Measurement of pressure:

Pressure is measured by Barometer, Pressure gauges and manometers.

Atmospheric pressure:

It is the pressure exerted by atmosphere. The atmospheric pressure varies from place to place. At sea level the pressure is,

1 standard atmosphere (atm) = 101325 Pa = 1.01325 bar

Barometer is used to measure atmospheric pressure.

Standard atmospheric pressure:

It is a pressure of atmospheric air at mean sea level. It is defined as "The pressure produced by a mercury column of 760 mm high having a density of 13595.09 kg/m^3 and acceleration due to gravity being 9.80665 m/s^2."

Now, $pressure = \rho \times g \times h$

Atmiya University Rajkot

$= 13595.09 \times 9.80665 \times 760 \times 10^{-3}$

$= 1.01325 \times 10^{5}$ N/m^2 = 1.01325 bar

Gauge pressure:

The pressure relative to the atmosphere is called gauge pressure. This pressure is measured by pressure gauge.

Absolute pressure

It is the pressure measured with reference to absolute zero pressure. It is the pressure related to perfect vacuum.

Mathematically, **Absolute pressure = Atmospheric pressure + Gauge pressure**

Vacuum:

The pressure below atmospheric pressure is called vacuum. A perfect vacuum is obtained when absolute pressure is zero; at this instant molecular momentum is zero. The relation between different pressures is given in Fig. 2.

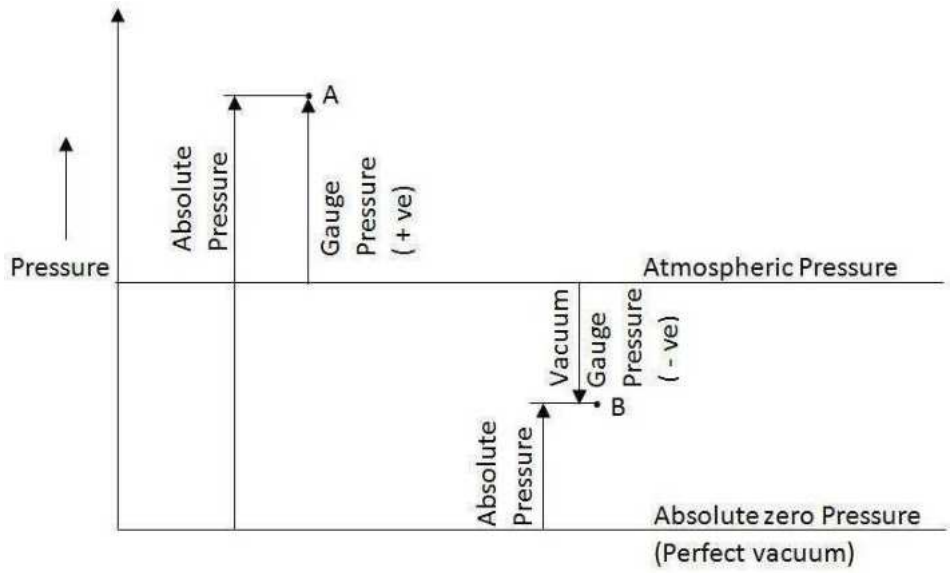

Fig. 1.3 Relation between different pressures

Work

Work is said to be done when a force moves the object through a distance in direction of force.

Hence, Work = Force x Distance moved into direction of force.

$$W = F \times d$$

$$W = \frac{F}{A} \times (A \times d)$$

$$W = P \times V$$

Unit of work is N·m or Joule (J).

Atmiya University Rajkot

Power

Power is defined as the rate of doing work OR the power is work done per unit time.

Mathematically, $Power = \frac{Workdone}{time}$ and unit of power is Joule/second.

In SI unit Joule/second is called Watt (W)

Watt is very small unit, so another larger units are megawatt (MW), Kilowatt (kW).

Energy

Energy means capacity for doing work.

The unit of energy is the unit of work i.e. Joule. In our daily life unit of energy use is Kilowatt hour (kWh).

Forms of energy:-

The different forms of energy are;

(1) Mechanical energy (2) Thermal or heat energy

(3) Chemical energy (4) Electrical energy-

(5) Nuclear energy

"Energy can neither be created nor be destroyed but the total amount of energy remains constant. It is possible to convert one form of energy into another form of energy." This is called the law of conservation of energy.

Quality of Energy

High grade energy: Energy that can be completely converted (neglecting loss) into the work.

Examples: Mechanical work, Electrical energy, Water power, Wind and tidal power, Kinetic energy of jet.

Low Grade energy: Only a certain portion of energy that can be converted into mechanical work (shaft power), that energy is called low grade energy.

Examples: Thermal or heat energy, Heat derived from combustion of fuels, Heat of nuclear fission.

Types of energy:

Energy may be classified as

(1) Stored energy

(2) Energy in transition

(1) Stored energy:

The stored energy of a substance may be in the form of mechanical energy, internal energy, nuclear energy etc.

(2) Energy in transition:

Energy in transition is the energy transferred as a result of potential difference.

Atmiya University Rajkot

This energy may be in the forms of heat energy, work energy, electrical energy.

Types of Mechanical Energy:

There are two types of mechanical energy

(1) Potential energy (2) Kinetic energy

1. **Potential energy:** The energy which a body possesses by virtue of its elevation or position is known as its potential energy.

   Example: Water stored at higher level in a dam

   Potential energy, $P.E. = m \times g \times h$

   Where

   m = mass of body in kg,

   g = gravitational acceleration = 9.81 m/s^2

   h = height in meter,

2. **Kinetic Energy:** The energy which a body possesses by virtue of its motion is known as its kinetic energy.

   Example: Jet of water coming out from nozzle.

   Kinetic Energy, $K.E = \frac{1}{2} mv^2$

   Where m = mass of body in kg, v = velocity of body in m/s.

Temperature

One is well familiar with the qualitative statement of the state of a system such as cold, hot, too cold, too hot etc. based on the day to day experience. The degree of hotness or coldness is relative to the state of observer. The temperature of a body is proportional to the stored molecular energy i.e. the average molecular kinetic energy of the molecules in a system.

Unit of temperature

In the International system (SI) of unit, the unit of thermodynamic temperature is Kelvin. It is denoted by the symbol K. However, for practical purposes the Celsius scale is used for measuring temperature. It is denoted by degree Celsius, ℃.

Absolute zero temperature:

It is the temperature at which the volume occupied by the gas becomes zero. This is the lowest temperature that can be measured by a gas thermometer.

Temperature Scale:

A look at the history shows that for quantitative estimation of temperature a German instrument maker Mr. Gabriel Daniel Fahrenheit (1686-1736) came up with idea of instrument like thermometer and developed mercury in glass thermometer.

Atmiya University Rajkot

In the year 1742, a Swedish astronomer Mr. Anders Celsius described a scale for temperature measurement. This scale Later on became very popular and is known as Centigrade Scale or Celsius scale. Some standard reference points used for international practical Temperature Scale are given in Table 1.

Table 1.1 Comparison of Scales

Sr No.	State	Temperature °C	K
1	Ice point	0	273.15
2	Steam Point	100	373.15
3	Triple point of water	0.010	273.16
4	Absolute zero	-273.15	0

Heat

When two bodies at different temperatures are brought into contact there are observable changes in some of their properties and changes continue till the two don't attain the same temperature if contact is maintained. Thus, there is some kind of energy interaction between two bodies which causes change in temperatures. This form of energy interaction is called heat.

Heat may be defined as the energy interaction at the system boundary which occurs due to temperature difference only.

Fig. 1.4 Heat flows in the direction of decreasing temperature

Interchange of heat

Let us consider two bodies, hot body and cold body. When hot body comes in contact with cold body, the heat will flow from hot body to cold body. This interchange of heat is due to temperature difference. See fig. 1.5.

$T_1 > T_2$

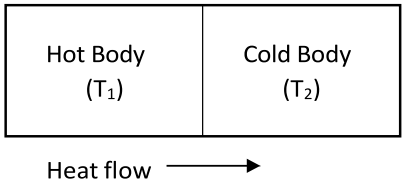

Fig. 1.5 Interchange of heat

There will be no heat flow if both the bodies in contact have equal temperature.

Units of heat

Heat is a form of energy. In SI system, unit of heat is taken as joule. Kilojoules (kJ) and Mega joule (MJ) are recommended larger units of heat.

Calorie (cal.) is also unit of heat. Generally Kilocalorie (kcal) is quantity of heat required to raise temperature of unit mass of water through one degree Celsius or Kelvin.

1 kcal = 4186.8 joules = 4.1868 kilo joules

Atmiya University Rajkot

Specific heat

It is defines as the quantity of heat required to raise the temperature of unit mass of the substance by one degree.

The unit of specific heat is kJ/kg K or J/kg K depending on the unit of Q.

From the definition of specific heat, the heat transfer Q is written as

$$Q = m \times C \times \Delta T$$

$$\therefore C = \frac{Q}{m \times \Delta T} = \frac{Q(kJ)}{m(kg) \times \Delta T\,(K)}$$

Heat capacity: The product of mass and specific heat is called the heat capacity of the substance.

Specific heat is function of temperature; hence it is not constant but varies with temperature. Generally it is assumed that it is constant.

Specific heats in thermodynamics

The solids and liquids have only one value of specific heat but a gas is considered to have two distinct values of specific heat capacity.

(i) A value when the gas is heated at constant volume, C_V

(ii) A value when the gas is heated at constant pressure C_P

The specific heat at constant volume C_V: It is defined as the heat required to increase the temperature of the unit mass of a gas by one degree as the volume is maintained constant.

The specific heat at constant volume C_P: It is defined as the heat required to increase the temperature of the unit mass of a gas by one degree as the pressure is maintained constant.

Change of state

The various states of substance (Phases) are Solid, Liquid and Vapour/Gas. When heat is supplied to a substance at the solid phase, its temperature rises until it starts converting into liquid.

Table 1.2 Phase change terminology

Sr.	Phase change	Name	Process
1	Solid to liquid	Fusion	Melting
2	Solid to vapour	Sublimation	Defrosting
3	Liquid to vapour	Evaporation	Evaporating
4	Liquid to solid	Fusion	Freezing
5	Vapour to solid	Sublimation	Frosting
6	Vapour to liquid	Condensation	Condensing

Melting point: It is the temperature at which the solid is converted into liquid when heat is supplied. **Boiling point:** It is the temperature at which the liquid is converted into vapour when heat is supplied.

Atmiya University Rajkot

Critical point: It is the temperature and pressure above which only one phase is existing i.e. vapour.

Triple point: Triple point of a substance refers to the state at which substance can coexist in solid, liquid and gaseous phase in equilibrium. For water triple point is 0.010 °C i.e. at this temperature ice, water and steam can coexist in equilibrium.

Thermodynamic systems

A system is defined as a quantity of matter or a region in space chosen for study. Examples: quantity of steam, turbine etc.

The mass or region outside the system is called the **surroundings.**

The real or imaginary surface that separates the system from its surroundings is called the **boundary.** These terms are illustrated in fig. 1.6.

The boundary of a system can be *fixed* or *movable. Note that the boundary is the contact surface shared by both the system and the surroundings.*

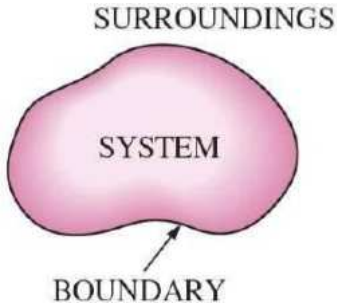

Fig. 1.6 System, surrounding and boundary

The system is identified by a boundary around the system. A system and its surroundings together are called the universe.

Universe = system + surroundings

Types of system

There are three types of system

(1) Open system, (2) Closed system and (3) Isolated system

1. Open system

In an open system mass and energy (in form of heat and work) both can transfer across the boundary (fig. 1.7).

Most of the engineering devices are open system. Examples: Boiler, turbine, compressor, pump, I.C. engine etc.

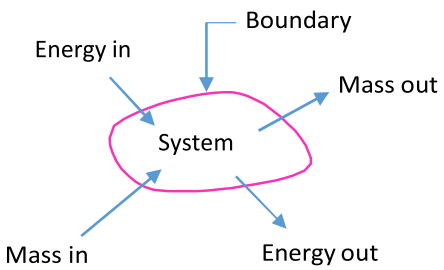

Fig. 1.7 An open system

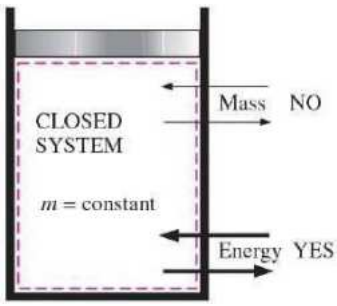

Fig. 1.8 A closed system

Atmiya University Rajkot

2. Closed system

A closed system exchange energy in the form of heat and work with its surroundings but there is no mass transfer across the system boundary (fig. 1.8).

The mass within the system remains constant though its volume can change against a flexible boundary. Example: cylinder bounded by a piston with certain quantity of fluid, pressure cooker etc.

3. Isolated system

There is no interaction between system and surroundings.

It is of fixed mass and energy, and hence there is no mass and energy transfer across the system boundary (fig. 1.9).

Example: The universe and perfectly insulated closed vessel (Thermo flask)

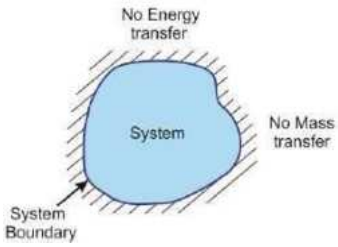

Fig. 1.9 An isolated system

Control Volume

For thermodynamic analysis of an open system, such as an air compressor, turbine, etc. attention is focused on a certain volume in space surrounding the system, known as control volume.

The control volume bounded by the surface is called **"Control Surface"**.

Both mass and energy can cross the control surface. It may be physical or imaginary. Example of control volume:

A diagram of an engine is shown in Fig. 1.10(*a*). The dashed line defines a control volume that surrounds the engine. Observe that air, fuel, and exhaust gases cross the boundary. A schematic such as in Fig. 1.10(*b*) often serves for engineering analysis.

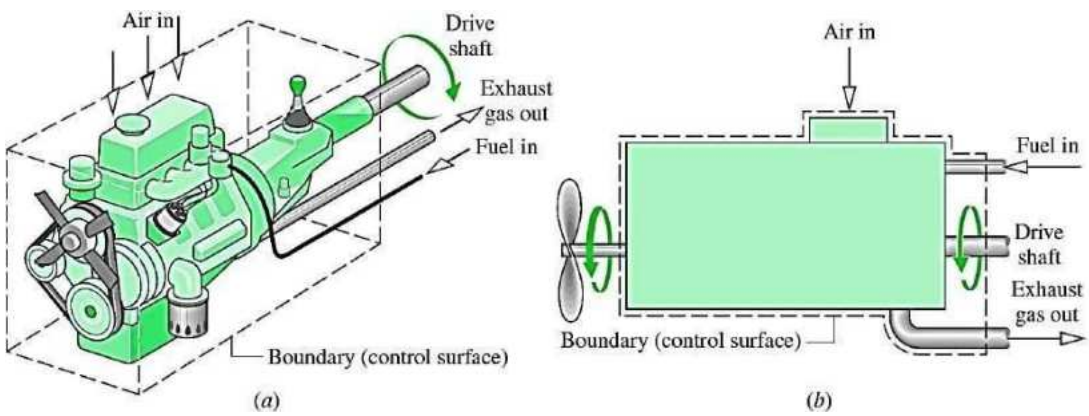

Fig. 1.10 Example of a control volume (open system) - An automobile engine

Sign convention for heat and work

Work

Atmiya University Rajkot

If the work is done by the system on surrounding, e.g. when a fluid expands pushing a piston outwards, the work is said to be positive.

Work output of the system = + W

If the work is done on the system by surrounding e.g. when a force is applied to a piston to compress a fluid, the work is said to be negative.

Work output of the system = - W

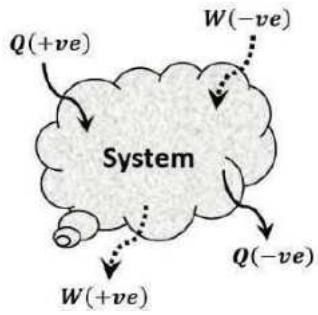

Fig. 1.11 Sign convention for heat and work

Heat

In general, the heat transferred to the system is considered as ***positive heat (+Q)*** while the heat transferred from the system is considered as ***negative heat (-Q)***.

Comparison between heat and work

Similarities

1. Both are energy interactions.
2. Both are transient phenomena.
3. Both are boundary phenomena.
4. Both represents energy crossing the boundary of the system.
5. They are not the property of the system.
6. Both are path functions.

Dissimilarities

1. Heat transfer is the energy interaction due to temperature difference only while work is not.
2. Heat is low grade energy while work is high grade energy.
3. Heat is thermal energy transfer while work is mechanical energy transfer across the system boundary.

Internal energy

In non-flow processes, fluid does not flow and has no kinetic energy. There is very small amount of change in potential energy because change in centre of gravity is negligible.

When heat is supplied to a body the amount of heat transferred to a body is not fully converted to work. When heat (Q) is supplied to a body, some amount of heat is converted into external work (W) due to expansion of fluid volume and remaining amount of heat causes either to increase its temperature or to change its state.

Internal Energy is one type of energy which is neither heat nor work; hence it is stored form of energy. It is denoted by U. Mathematically,

$$Q = W + U$$

where Q is amount of heat, W is work and U is internal energy.

The internal energy per unit mass is called specific internal energy. Below equation is referred as non-flow energy equation. In other words, for non-flow process

Atmiya University Rajkot

$$\left\{\begin{matrix}\text{Heat transferred through}\\ \text{system boundary}\end{matrix}\right\} = \left\{\begin{matrix}\text{Work transferred through}\\ \text{system boundary}\end{matrix}\right\} + \left\{\begin{matrix}\text{Change in}\\ \text{Internal energy}\end{matrix}\right\}$$

Enthalpy

Enthalpy is a thermodynamic property of fluid, denoted by H. *It can be defined as the summation of internal energy and flow energy. Mathematically,*

$$H = \underbrace{U}_{\text{Internal energy}} + \underbrace{PV}_{\text{Flow work}}$$

On unit mass basis, the specific enthalpy could be given as

$h = u + pv$

From expression of enthalpy it is clear that as we cannot have absolute value of internal energy, the absolute value of enthalpy cannot be obtained. Therefore only change in enthalpy of substance is considered.

Thermodynamic properties, Processes and Cycle

Thermodynamic property

"A thermodynamic property refers to the characteristics which can be used to describe the physical condition or state of a system."

Examples of thermodynamic properties are: Temperature, Pressure, Volume, Energy, Mass, Velocity, etc.

Types of thermodynamic property:

1. Intensive Property

Intensive property is **In**dependent of the mass of the system. Its value remains same whether one considers the whole system or only a part of it.

Examples: Pressure, Temperature, Density, etc.

2. Extensive Property

Extensive property depends on mass of the system.

Examples: Mass, Volume, Total energy, Enthalpy etc.

3. Specific Property

Extensive properties per unit mass are called specific properties.

Example: Specific volume $\left(v = \frac{V}{m}\right)$ and specific enthalpy $\left(h = \frac{H}{m}\right)$

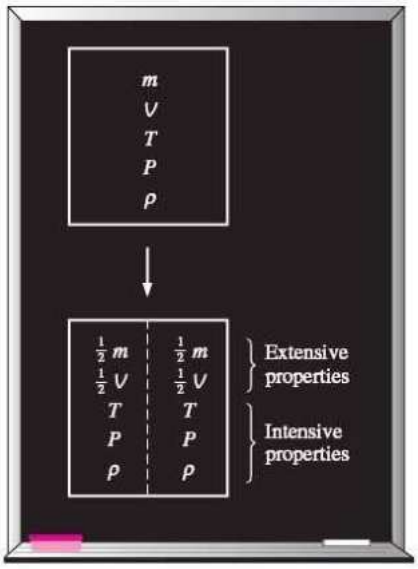

Fig. 1.12 Criterion to differentiate intensive and extensive properties

<u>State</u>

State refers to the condition of a system as described by its properties. It gives complete description of the system. At a given state, all the properties of a system have fixed values.

Atmiya University Rajkot

If the value of even one property changes, the state will change to a different one (fig. 1.13)

Equilibrium

The word **equilibrium** implies a state of balance. In an equilibrium state there are no unbalanced potentials (or driving forces) within the system.

A system is in **thermal equilibrium** if the temperature is same throughout the entire system.

Mechanical equilibrium is related to pressure. If there is no change in pressure at any point in the system with time the system is in mechanical equilibrium.

Chemical equilibrium is that state when the chemical composition does not change with time and there is no chemical reaction.

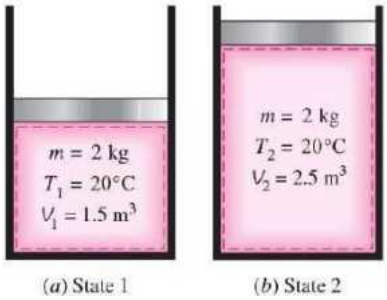

Figure 1.13 A system at two different states

A system will be in **thermodynamic equilibrium** only when it satisfies the conditions for all modes of equilibrium.

Process and path

Any change that a system undergoes from one equilibrium state to another is called a **process,** and the series of states through which a system passes during a process is called the **path** of the process (Figure 1.14).

To describe a process completely, one should specify the initial and final states of the process, as well as the path it follows, and the interactions with the surroundings.

There are infinite ways for a system to change from one state to another.

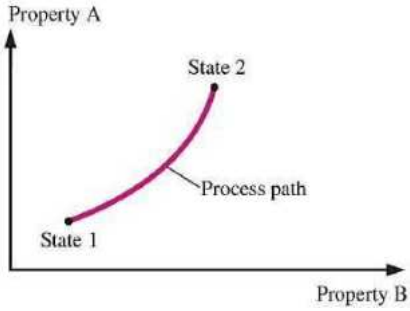

Fig. 1.14 A process between states 1 and 2 and the process path

Cycle

When a system in a given initial state goes through a number of different changes of state or processes and finally returns to its initial state, the system has undergone a **cycle.** Thus for a cycle the initial and final states -are identical.

Example: Steam that circulates through a steam power plant undergoes a cycle.

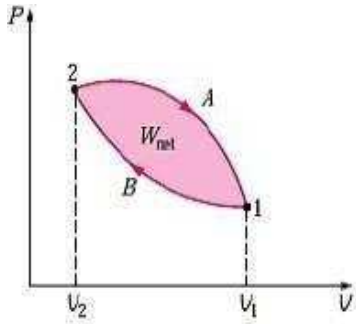

Fig. 1.15 Cyclic Process

Zeroth law of Thermodynamics

Zeroth law of thermodynamics states that *"the bodies A and B are in thermal equilibrium with a third body C separately then the two bodies A and B shall also be in thermal equilibrium with each other"*.

This is the principle of temperature measurement. Block diagram shown in fig. 1.16 shows the Zeroth law of thermodynamics.

Atmiya University Rajkot

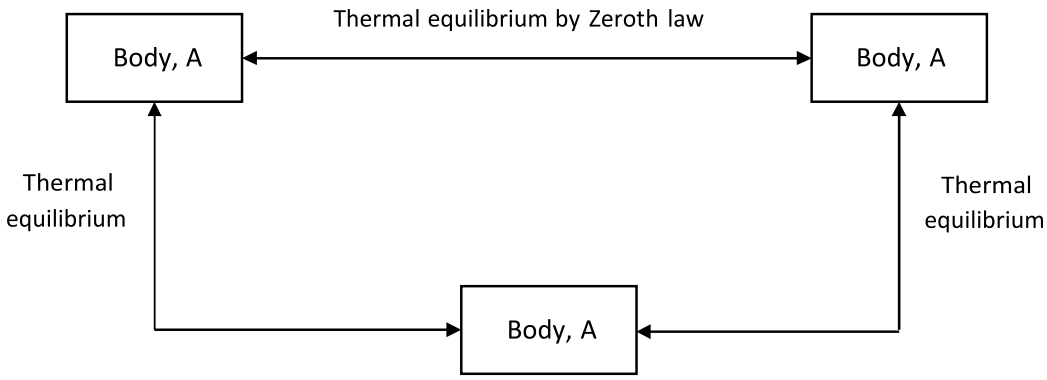

Fig. 1.16 Zeroth law of thermodynamics

First law of thermodynamics

The first law of thermodynamics is the law of conservation of energy and it states that "energy can neither be created nor destroyed, it can be converted from one form to another and total energy remains same".

Let us take water in a container and heat it from the bottom. What will happen? Container and the water inside will get heated up. This heating can be sensed by either touching it or by measuring its initial and final temperatures. What has caused it to happen so?

Answer for the above question lies in the energy interactions.

First law of thermodynamics provides for studying the relationships between the various forms of energy and energy interactions.

First law may be expressed as,

Change in total energy = net energy transferred as heat and work

$$\Delta E = Q - W$$

Where ΔE is summation of various energies like Internal energy (ΔU), Kinetic energy (ΔKE), Potential energy (ΔPE) etc.

$$\Delta E = Q - W = \Delta U + \Delta KE + \Delta PE....$$

In closed system, mass is fixed and there is no elevation difference and movement. Hence, ΔKE = 0 and $\Delta PE = 0.$

$$\Delta U = Q - W$$

For cyclic process ΔE = 0

Hence first law for a cyclic process is $Q - W = 0$.

That is, the net heat transfer and net work done during a cyclic process are equal.

Definitions

Vapour

It can be defined as that state of the substance in which the evaporation from its liquid state is not complete.

A Vapour consists of a mixture of the pure gaseous form and liquid particles in suspension. Example: Steam contains water particles.

With the changes in temperature and pressure, a vapour can undergo condensation or evaporation.

Vapour may be in three conditions, wet, dry and superheated. Superheated vapour behaves like a perfect gas.

Gas

It is the state of a substance in which the evaporation from the liquid state is complete.

Within the limits of temperature and pressure in thermodynamics, the substance like O_2, H_2, air, N_2 are taken as gases.

Perfect Gas

A gas which strictly obeys all the gas laws under all conditions of temperature and pressure is called a perfect gas.

There is no gas which is perfect, but many gases like O_2, N_2, H_2, and air tend to behave like perfect gases. They are known as real gases.

Gas laws

1. Boyle's law:

This law was discovered by Robert Boyle in 1662 A.D. and it can be defined as follows:

"The volume of a given mass of a perfect gas varies inversely as the absolute pressure when the temperature is constant."

$$V \propto \frac{1}{p}$$

$$\therefore pV = C \qquad (3.1)$$

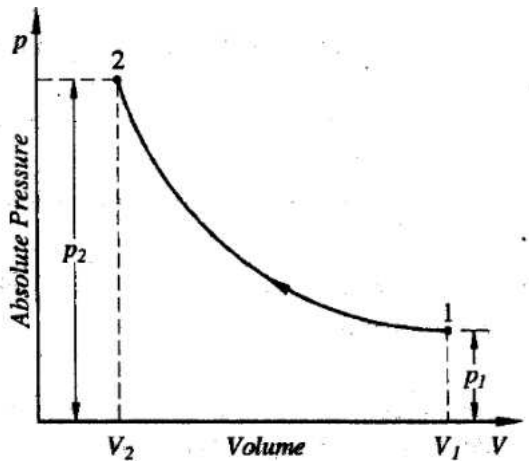

Fig. 3.1 Boyle's law

Where,

p = Absolute pressure of gas in *Pa,*

V = Volume occupied by the gas in m^3

C = Constant of proportionality.

In fig. 3.1, let a quantity of gas at pressure p_1 and volume V_1 changes its pressure and volume in a cylinder without change in temperature. Let, p_2 and V_2 be the final pressure and volume respectively.

Atmiya University Rajkot

∴ According to Boyle's law,

$$p_1 V_1 = p_2 V_2 = \text{Constant} = C$$

$$\therefore p_1 V_1 = p_2 V_2 \qquad (3.2)$$

Above equation is useful working relation of Boyle's Law.

2. Charles law:

This law was discovered by Charles in 1787 A.D. and it can be defined as follows:

"If the pressure of the given mass of a gas is kept constant, then the volume of the gas varies directly in proportion to its absolute temperature."

$$V \propto T$$

$$\therefore V = C\,T \quad \text{OR} \quad \frac{V}{T} = C \qquad (3.3)$$

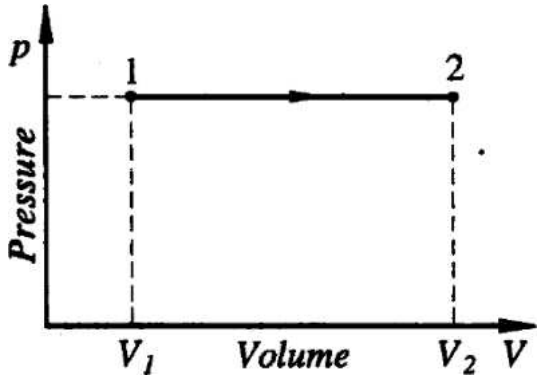

Fig 3.2 Charles law

where ,

V = Volume occupied by a given mass of gas in m^3

T = Absolute temperature of the gas in K.

C = Constant of proportionality

Referring to fig. 3.2,

If V_1 and T_1 = Initial conditions of volume and absolute temperature at point 1

V_2 and T_2 = Final conditions of volume and absolute temperature at point 2

∴ By using equation 3.3

$$\frac{V_1}{T_1} = \frac{V_2}{T_2} = \text{C}$$

$$\frac{V_1}{V_2} = \frac{T_1}{T_2} \qquad (3.4)$$

Charles Law can also be stated as "The pressure of a gas varies with the absolute temperature provided the volume occupied by the given mass of the gas is constant".

$$\therefore p \propto T$$

$$\therefore \frac{p}{T} = \text{Constant} = \text{C}$$

Atmiya University Rajkot

$$\therefore \frac{p_1}{T_1} = \frac{p_2}{T_2} = C$$

$$\therefore \frac{p_1}{p_2} = \frac{T_1}{T_2} \qquad (3.5)$$

3. Combined gas law:

In practice, pressure, volume and temperature of a gas changes at the same time. As the pressure changes, Charles law cannot be applied and as the temperature changes, Boyle's law cannot be applied. By combining these two laws the final conditions of the gas can be determined.

Let us consider a *m kg of mass* of a perfect gas to change its state in the following two successive processes (fig. 3.3) (i) Process 1-2 at constant pressure, and (ii) Process 2-3 at constant temperature.

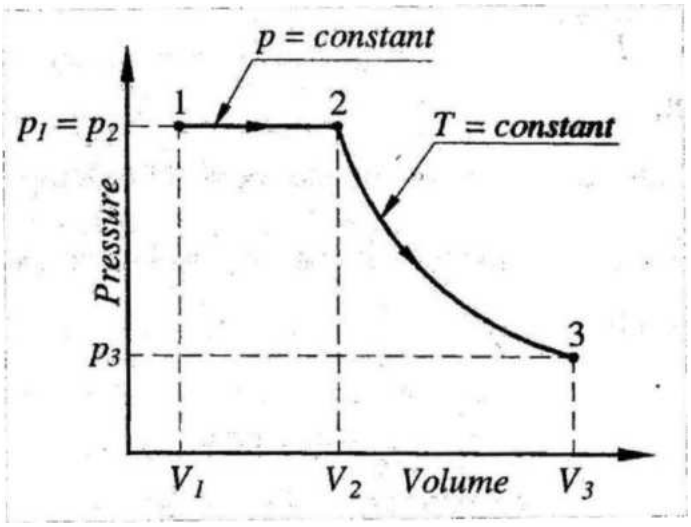

Fig. 3.3 Combined Gas law

<u>For process 1-2,</u>

Applying Charles law

We have, $\frac{V_1}{T_1} = \frac{V_2}{T_2}$ (∵ p = constant)

And since $T_2 = T_3$, we may write

$$\frac{V_1}{T_1} = \frac{V_2}{T_3} \qquad (3.6)$$

<u>For process 2-3,</u>

Applying Boyle's law

$p_2 V_2 = p_3 V_3$ and since, $p_2 = p_1$

Atmiya University Rajkot

$\therefore p_1 V_2 = p_3 V_3$

$$\therefore V_2 = \frac{p_3 V_3}{p_1} \quad (3.7)$$

Substituting the value of V_2 from eq. (3.7) in eq. (3.6), we get

$$\therefore \frac{V_1}{T_1} = \frac{p_3 V_3}{p_1 T_3}$$

$$\therefore \frac{p_1 V_1}{T_1} = \frac{p_3 V_3}{T_3}$$

$$\therefore \frac{pV}{T} = \text{Constant} \quad (3.8)$$

The magnitude of this constant depends upon the particular gas and it is denoted by R , where R is called the characteristics gas constant. For *m* kg of gas,

$$\therefore \frac{pV}{T} = mR$$

$$\therefore pV = mRT \quad (3.9)$$

Equation (3.9) is called equation of state for a perfect gas.

$$p\frac{V}{m} = RT$$

$$\therefore pv = RT$$

Where,

$v = \frac{V}{m} =$ specific volume, m^3/kg.

V = Volume of gas in m^3,

p = Pressure of gas

T = Temperature of gas in K

R = Characteristic gas constant, J/kg K

Non-flow processes

Non flow process is the one in which there is no mass interaction across the system boundaries during the occurrence of the process.

Different types of non-flow process of perfect gases is given below,

1. Constant volume (Isochoric) process
2. Constant pressure (Isobaric) process

3. Constant Temperature (Isothermal) process
4. Adiabatic process
5. Polytropic process

Constant Volume Process

In a constant volume process, the working substance is contained in a rigid vessel. Hence the boundaries of the system are immovable and no work can be done on or by the system. This process is also known as ***Isochoric process.***

Fig. 3.4 shows the system and states before and after heat addition at constant volume.

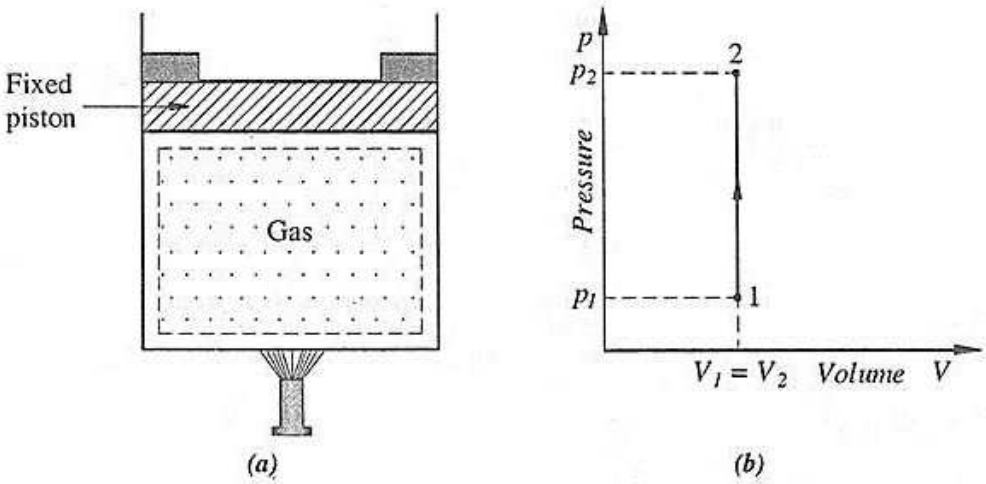

Fig. 3.4 Constant volume process

Work done during the process

We have,

Work done $= p\,dV$

Total work done = $\int_{V_1}^{V_2} p dV$

Since the volume is constant, Change in volume $dV = 0$.

$\therefore$ workdone $\quad W = 0$

Relation between *p*, V and T:

We know that

$$\frac{p\mathrm{V}}{T} = \text{Constant}$$

$$\therefore \frac{p_1 V_1}{T_1} = \frac{p_2 V_2}{T_2}$$

Atmiya University Rajkot

But $V_1 = V_2 = \text{constant}$

$$\therefore \frac{p_1}{T_1} = \frac{p_2}{T_2}$$

Change in internal energy:

We know that,

$$du = C_v(T_2 - T_1)$$

So, $du = mC_v(T_2 - T_1)$ (For m kg of gas)

Thus, internal energy is a function of temperature alone.

Heat transferred:

According to first law of thermodynamics,

$$\delta Q = \delta W + dU$$

For constant volume process,

$$dV = 0, \; so \; \delta W = 0$$

$$\therefore \delta Q = dU = mC_v(T_2 - T_1)$$

So, Heat transfer = Change in internal energy

Change in enthalpy:

As per definition of enthalpy, $H = U + pV$

For state 1 and 2,-

$$H_1 = U_1 + p_1V_1$$
$$H_2 = U_2 + p_2V_2$$

Change in enthalpy,

$$\begin{aligned} \Delta H &= H_2 - H_1 \\ &= (U_2 - U_1) + (p_2V_2 - p_1V_1) \qquad \{\because pV = mRT \;\&\; dU = mC_v(T_2 - T_1)\} \\ &= m\,C_v(T_2 - T_1) + mR(T_2 - T_1) \end{aligned}$$

But $R = C_p - C_v$

$$\therefore \Delta H = \mathrm{m\,C_v}(\mathrm{T_2} - \mathrm{T_1}) + \mathrm{m}\,(\mathrm{C_p} - \mathrm{C_v})\,(\mathrm{T_2} - \mathrm{T_1})$$

$$\therefore \Delta H = \mathrm{m\,C_p}(\mathrm{T_2} - \mathrm{T_1})$$

Atmiya University Rajkot

Constant Pressure Process (Isobaric Process)

In an isobaric process, the process of the gas remains constant.

Work done during the process

We have,

Work done = pdV . But p is constant,

Hence work done, $W = p\int_{V_1}^{V_2} dV = p(V_2 - V_1)$

The work done by the gas during constant pressure process is represented by area below the line 1 - 2 on *p* – V diagram as shown in fig. 3.5.

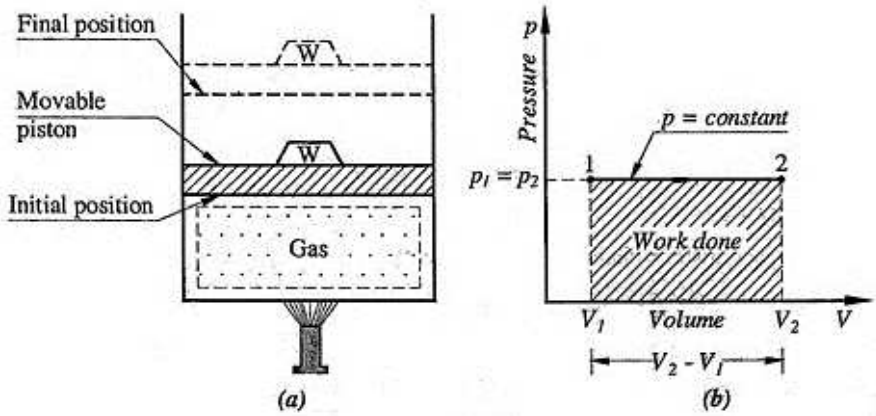

Figure 3.5 Constant pressure process

Relation between *p*, V and T:

We know that

$$\frac{p_1V_1}{T_1} = \frac{p_2V_2}{T_2}$$

But $p_1 = p_2 =$ Constant

$$\therefore \frac{V_1}{T_1} = \frac{V_2}{T_2}$$

This is the equation of Charle's law.

Change in internal energy:

We know that,

$$du = m\,C_v(T_2 - T_1)$$

Atmiya University Rajkot

Heat transferred:

According to first law of thermodynamics,

$$\delta Q = \delta W + dU$$

$$= p(V_2 - V_1) + mC_v(T_2 - T_1)$$

$$= m\,R\,(T_2 - T_1) + mC_v(T_2 - T_1) \quad (\because PV = mRT)$$

$$= m(C_p - C_v)(T_2 - T_1) + m\,C_v(T_2 - T_1)$$

$$= m\,C_p(T_2 - T_1)$$

Change in enthalpy:

As per definition of enthalpy, $H = U + pV$

For state 1 and 2,

$$H_1 = U_1 + p_1V_1$$
$$H_2 = U_2 + p_2V_2$$

Change in enthalpy,

$$\Delta H = H_2 - H_1$$
$$= (U_2 - U_1) + (p_2V_2 - p_1V_1) \qquad \{\because pV = mRT \;\&\; dU = mC_v(T_2 - T_1)\}$$
$$= m\,C_v(T_2 - T_1) + mR(T_2 - T_1)$$

But $R = C_p - C_v$

$$\therefore \Delta H = \mathrm{m\,C_v}(\mathrm{T_2 - T_1}) + \mathrm{m}\,(\mathrm{C_p - C_v})\,(\mathrm{T_2 - T_1})$$

$$\therefore \Delta H = \mathrm{m\,C_p}(\mathrm{T_2 - T_1})$$

Constant Temperature Process (Isothermal Process)

In an isothermal process, the temperature remains constant during the process.

This process follows Boyle's law.

Thus the law of expansion or compression for isothermal process on $p - V$ diagram is hyperbolic as p is inversely varies as V. Thus this process is also known as ***hyperbolic process or Constant Internal energy process.***

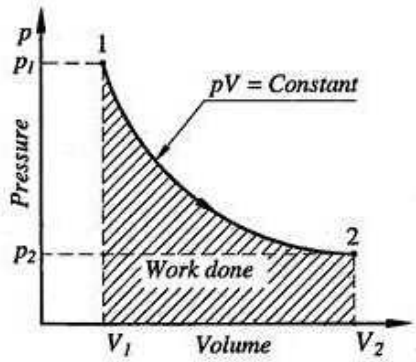

Figure 3.6 Isothermal Process

Atmiya University Rajkot

Work done during the process

Work done, W = Area below the curve

$$= \int_{V_1}^{V_2} dV$$

But $pV = p_1V_1 = C$

Hence, $p = \frac{C}{V}$

Substituting for p in the integral, we get,

$$W = \int_{V_1}^{V_2} C\,dV = C\int \frac{dV}{V} = C\ln\frac{V_2}{V_1}$$

Substituting for C, we get

Work done, $W = p_1V_1 \ln\frac{V_2}{V_1}$

$$= p_1V_1 \ln r$$

Where, $\frac{V_2}{V_1} = r$ = ratio of expansion

But $p_1V_1 = mRT_1$ and $p_2V_2 = mRT_2$

Therefore,

Work done

$W = mRT_1 \log_e r = mRT_2 \log_e r$

Relation between *p*, V and T:

We know that

$$\frac{p_1V_1}{T_1} = \frac{p_2V_2}{T_2}$$

But $T_1 = T_2 = Constant$

$\therefore p_1V_1 = p_2V_2$

Change in internal energy:

We know that,

$du = m\,C_v(T_2 - T_1)$

but $T_1 = T_2$

Therefore, change in internal energy, $dU = 0$.

So, during the isothermal operation ***change in internal energy is zero*** and hence this process is also known as ***constant internal energy process.***

Heat transferred:

According to first law of thermodynamics,

$$\delta Q = \delta W + \mathrm{d}U$$

But change in internal energy $dU = 0$.

So, $\delta Q = \delta W$

$$\therefore \text{Heat transfer, } \delta Q = p_1 V_1 \log_e \frac{V_2}{V_1} = p_1 V_1 \log_e \frac{p_1}{p_2}$$

$$= mRT_1 \log_e \frac{p_1}{p_2}$$

Change in enthalpy:

Change in enthalpy,

$$\Delta H = H_2 - H_1 = mC_p (T_2 - T_1)$$

But, $T_1 = T_2$.

So, $\Delta H = 0$.

Therefore in isothermal process there is no change in internal energy and enthalpy.

Adiabatic Process

An adiabatic process is the thermodynamic process in which there is no heat interaction during the process, i.e. during the process Q = 0. In these processes the work interaction is there at the expense of internal energy. There is no supply of heat takes place during compression process. Frictionless adiabatic process is known as ***isentropic process***.

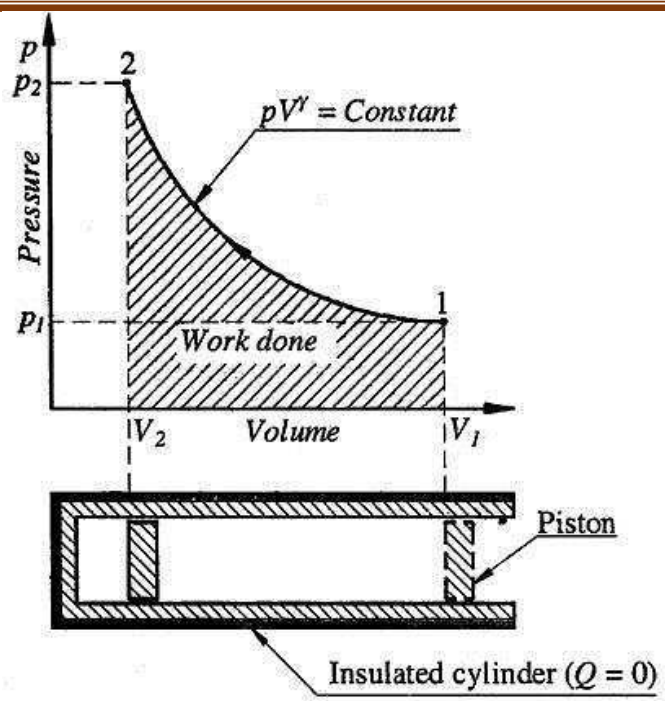

Fig. 3.7 Adiabatic Process

Derivation of the equation pV^{γ} = Constant:

According to first law of thermodynamics,

Heat supplied = Change in internal energy + work done

Let us consider unit mass of gas

We have, $\delta q = C_v dT + pdv$

For, adiabatic process $\delta q = 0$.

$$\therefore C_v dT + pdv = 0$$

We have characteristic gas equation

$$pV = RT \qquad \text{(for unit mass)}$$

By differentiating this equation, we get

$$pdv + vdp = RdT \qquad (3.10)$$

$$\therefore dT = \frac{pdv + vdp}{R}$$

Substituting value of dT in equation 3.10,

$$\therefore \frac{C_v(pdv + vdp)}{R} + pdv = 0$$

$$\therefore C_v(pdv + vdp) + R(pdv) = 0$$

$$\therefore C_v(pdv + vdp) + (C_p - C_v)(pdv) = 0$$

$$\therefore C_v vdp + C_p . pdv = 0$$

Dividing above equation by $C_v \cdot p \cdot v$, we have,

$$\therefore \frac{C_p}{C_v}\left(\frac{dv}{v}\right) + \frac{dp}{p} = 0$$

By integrating above equation and putting $C_p / C_v = \gamma$, we get

$$\gamma \ln v + \ln p = \ln c \qquad (\because C = const)$$

$$\ln v^{\gamma} + \ln p = \ln c$$

$$pv^{\gamma} = Const$$

The above equation is known as **Poission's law.**

The adiabatic process on *p* – V diagram is represented in figure 3.7.

Work done during the process

Work done, W = $\int_{V_1}^{V_2} pdV$

For adiabatic process, $pV^{\gamma} = \text{constant} = C$

Hence, $p = \frac{C}{V^{\gamma}}$

Substituting value of *p* in the integral, we get,

$$W = \int_{V_1}^{V_2} \frac{C}{V^{\gamma}} dV = C \int_{V_1}^{V_2} \frac{dV}{V^{\gamma}} = C\left[\frac{V^{-\gamma+1}}{-\gamma+1}\right]_{v_1}^{v_2}$$

$$= \frac{C}{-\gamma+1}\left(V_2^{-\gamma+1} - V_1^{-\gamma+1}\right)$$

$$C = p_1 V_1^{\gamma} = p_2 V_2^{\gamma}$$

By substituting for C, we get

Work done, $W = \frac{1}{-\gamma + 1}\left[p_2V_2^{\gamma} \times V_2^{-\gamma+1} - p_1V_1^{\gamma} \times V_1^{-\gamma+1}\right]$

$$= \frac{p_2V_2 - p_1V_1}{1-\gamma}$$

$$\therefore W = \frac{p_1V_1 - p_2V_2}{\gamma - 1}$$

We know that $p_1 V_1 = m R T_1$ and $p_2 V_2 = m R T_2$

$$\therefore W = \frac{R(T_1 - T_2)}{\gamma - 1} m$$

$$= \frac{(C_p - C_v)(T_1 - T_2)}{\gamma - 1} \qquad (\because R = (C_p - C_v), m = 1kg)$$

$$= \frac{(C_p - C_v)(T_1 - T_2) \times C_v}{(C_p - C_v)} \qquad \left(\because \gamma - 1 = \frac{C_p - C_v}{C_v}\right)$$

$\therefore W = C_v(T_1 - T_2)$ = Change in internal energy.

Relation between *p*, V and T:

We know that $pV^{\gamma} = \text{Constant}$ and $\frac{pV}{T} = Const$

So we have

$$p_1V_1^{\gamma} = p_2V_2^{\gamma}$$

$$\frac{p_2}{p_1} = \frac{V_1^{\gamma}}{V_2^{\gamma}} = \left(\frac{V_1}{V_2}\right)^{\gamma} \quad (3.11)$$

and $\frac{p_1V_1}{T_1} = \frac{p_2V_2}{T_2}$

$$\therefore \frac{T_2}{T_1} = \frac{p_2}{p_1} \times \frac{V_2}{V_1} \quad (3.12)$$

Put the value of eq. 3.11 in 3.12

$$\therefore \frac{T_2}{T_1} = \left(\frac{V_1}{V_2}\right)^{\gamma} \times \frac{V_2}{V_1}$$

Atmiya University Rajkot

$$\therefore \frac{T_2}{T_1} = \left(\frac{V_1}{V_2}\right)^{\gamma-1} \quad (3.13)$$

From above equations, we get,

$$\frac{T_1}{T_2} = \left(\frac{p_1}{p_2}\right)^{\frac{\gamma-1}{\gamma}}$$

$$\therefore \frac{T_1}{T_2} = \left(\frac{p_1}{p_2}\right)^{\frac{\gamma-1}{\gamma}} = \left(\frac{V_2}{V_1}\right)^{\gamma-1}$$

Change in internal energy:

$du = mC_v(T_2 - T_1)$

or

According to first law of thermodynamics,

$\delta Q = \delta W + dU$

But for adiabatic process $\delta Q = 0$. (No heat transfer)

Therefore, $dU = -\delta W$

So, change in internal energy = - work done

For adiabatic process, change in internal energy is numerically equal to work done. When the work is done by the gas, it loses internal energy and gains internal energy when the work is done on the gas.

Heat transferred:

During adiabatic process, heat transfer is zero.

So, $\delta Q = 0$.

Change in enthalpy:

$dh = mC_p(T_2 - T_1)$

Polytropic Process

Polytropic process is the most commonly used in practice. In this case, the thermodynamic process is said to be governed by the law $pV^n = \text{Constant}$, where n is the index which can vary from $-\infty$ to $-\infty$. But generally index n lies within the range of 1 to 1.7. Thus the various thermodynamic processes discussed above are special cases of polytropic *process*.

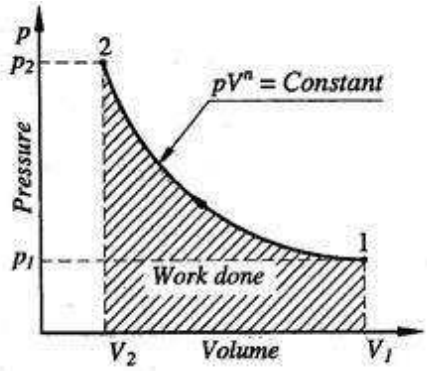

Fig. 3.8 Polytropic Process

The main difference in equation of isentropic and polytropic process is that if we replace γ by n in the relation of adiabatic operation, we get relation for polytropic process.

Relation between *p*, V and T:

$$\therefore p_1V_1^n = p_2V_2^n$$

$$\frac{T_2}{T_1} = \left(\frac{p_2}{p_1}\right)^{\frac{n-1}{n}} = \left(\frac{V_1}{V_2}\right)^{n-1}$$

Work done during the process

From adiabatic process,

$$W = \frac{p_1V_1 - p_2V_2}{\gamma - 1}.$$

So substituting γ = n in equation, we get

$$W = \frac{p_1V_1 - p_2V_2}{n-1} = \frac{mR(T_1 - T_2)}{n-1}$$

Change in internal energy:

$$dU = mC_v\left(T_2 - T_1\right)$$

Heat transferred:

By first law of thermodynamics

Heat supplied = Work done + Change in internal energy

We have, $W = \dfrac{p_1V_1 - p_2V_2}{n-1}$

Change in internal energy = $mC_v\left(T_2 - T_1\right)$

Atmiya University Rajkot

But, $C_v = \frac{R}{\gamma - 1}$,

So, heat transferred,

$$\delta Q = \frac{p_1V_1 - p_2V_2}{n-1} + mC_v(T_2 - T_1)$$

$$= \frac{p_1V_1 - p_2V_2}{n-1} + \frac{mR}{\gamma - 1}(T_2 - T_1)$$

$$= \frac{p_1V_1 - p_2V_2}{n-1} + \frac{mRT_2 - mRT_1}{\gamma - 1}$$

$$= \frac{p_1V_1 - p_2V_2}{n-1} + \frac{p_2V_2 - p_1V_1}{\gamma - 1} \qquad (\because pV = mRT)$$

$$= (p_1V_1 - p_2V_2)\left[\frac{1}{n-1} - \frac{1}{\gamma - 1}\right]$$

$$= \frac{(p_1V_1 - p_2V_2)[\gamma - 1 - n + 1]}{(n-1)(\gamma - 1)}$$

$$= \left(\frac{p_1V_1 - p_2V_2}{n-1}\right)\left(\frac{\gamma - n}{\gamma - 1}\right)$$

But, $\frac{p_1V_1 - p_2V_2}{n-1}$ = work done

$\therefore$ Heat transferred, $\delta Q = \left(\frac{\gamma - n}{\gamma}\right) \times$ work done during polytropic process

Change in enthalpy:

$dh = mC_p(T_2 - T_1)$

Special cases of Polytropic Process

(a) When n = 0

$$\frac{p_1}{p_2} = \left(\frac{V_2}{V_1}\right)^0 = 1$$

$\therefore p_1 = p_2$

So, the process is a ***constant pressure process***.

Atmiya University Rajkot

(b) When n = 1,

$$\frac{T_2}{T_1} = \left(\frac{p_2}{p_1}\right)^{\frac{n-1}{n}} = \left(\frac{p_2}{p_1}\right)^{\frac{1-1}{1}} = \left(\frac{p_2}{p_1}\right)^{0} = 1$$

$$\therefore T_1 = T_2$$

So, the process is a ***constant temperature process*.**

(C) When *n* = γ

$$\frac{p_2}{p_1} = \left(\frac{V_1}{V_2}\right)^{n} = \left(\frac{V_1}{V_2}\right)^{\gamma}$$

So, the process is an ***adiabatic process*.**

(d) When n =∞,

$$p_1V_1^n = p_2V_2^n$$

$$\frac{V_1}{V_2} = \left(\frac{p_2}{p_1}\right)^{\frac{1}{n}} = \left(\frac{p_2}{p_1}\right)^{\frac{1}{\infty}} = \left(\frac{p_2}{p_1}\right)^{0} = 1$$

So, the process is a ***constant volume process*.**

When these values are plotted on *p* – V diagram as shown in fig. 3.9, it can be seen that they form a family of curves.

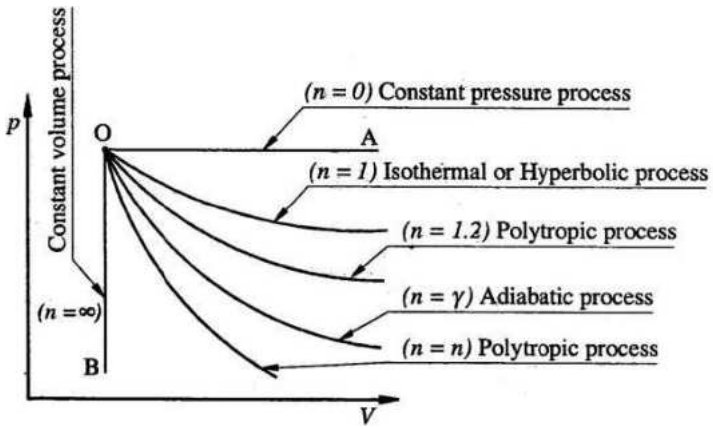

Fig. 3.9 Polytropic processes on p – V diagram

Atmiya University Rajkot

In 1876 German engineer Nikolaus Otto developed four stroke engine based on Otto cycle. It revolutionized the development of internal combustion engines and are even used till date. In 1892 another German engineer Rudolf Diesel developed diesel engine.

ENGINE

Engine is a device which converts one form of Energy into another form.

HEAT ENGINE

Heat engine is a device which transforms the chemical energy of a fuel into thermal energy and utilizes this thermal energy to perform useful work. Thus, thermal energy is converted to mechanical energy in a heat engine.

Heat engine may be classified based on where the combustion of fuel takes place, i.e. whether outside the cylinder or inside the cylinder.

a) External Combustion Engines (E.C. Engines)
b) Internal Combustion Engines (I.C. Engines)

Comparison of I.C. Engines and E.C. Engines

Comparison of IC engine and EC engine is given in table 1.

Table 1 Comparison of IC engine and EC engine

Sr.	I.C. Engine	E.C. Engine
1	Combustion of fuel takes place inside the cylinder	Combustion of fuel takes place outside the cylinder
2	Working fluid may be Petrol, Diesel & Various types of gases	Working fluid is steam
3	Require less space	Require large space
4	Capital cost is relatively low	Capital cost is relatively high
5	Starting of this engine is easy & quick	Starting of this engine requires time
6	Thermal efficiency is high	Thermal Efficiency is low
7	Power developed per unit weight of these engines is high	Power Developed per unit weight of these engines is low
8	Fuel cost is relatively high	Fuel cost is relatively low

IC engine Classification

I.C. Engines may be classified according to,

a) Type of the fuel used as :

(1) Petrol engine (2) Diesel engine

(3) Gas engine (4) Bi-fuel engine (Two fuel engine)

Atmiya University
Rajkot

b) Nature of thermodynamic cycle as :

(1) Otto cycle engine (2) Diesel cycle engine

(3) Duel or mixed cycle engine

c) Number of strokes per cycle as :

(1) Four stroke engine (2) Two stroke engine

d) Method of ignition as:

(1) Spark ignition engine (S.I. engine)

Mixture of air and fuel is ignited by electric spark.

(2) Compression ignition engine (C.I. engine)

The fuel is ignited as it comes in contact with hot compressed air.

e) Method of cooling as:

(1) Air cooled engine (2) Water cooled engine

f) Speed of the engine as :

(1) Low speed (2) Medium speed

(3) High speed

Petrol engine are high speed engines and diesel engines are low to medium speed engines

g) Number of cylinder as :

(1) Single cylinder engine (2) Multi cylinder engine

h) Position of the cylinder as :

(1) Inline engines (2) V – engines

(3) Radial engines (4) Opposed cylinder engine

(5) X – Type engine (6) H – Type Engine

(7)U – Type Engine (8) Opposed piston engine

(9) Delta Type Engine

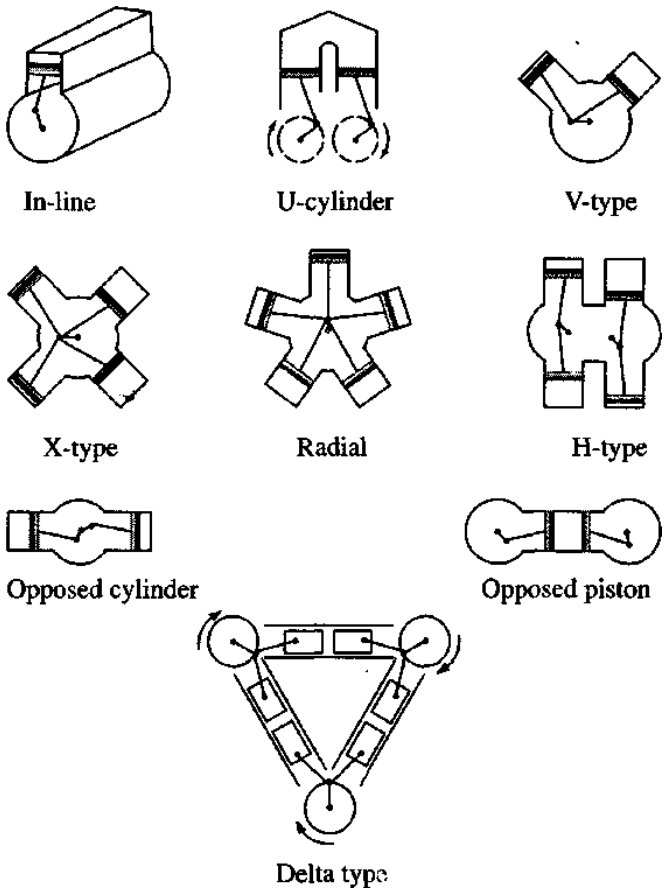

Fig. 7.1 Engine classification by cylinder arrangements

Engine details

The various important parts of an I.C. engine are shown in fig. 7.1.

1. Cylinder

It is the heart of the engine in which the fuel is burnt and the power is produced. Cylinder has to withstand very high pressure and temperature because the combustion of fuel takes place inside the engine cylinder. Therefore cylinder must be cooled. To prevent the wearing of the cylinder block, a sleeve will be fitted tightly in the cylinder.

2. Cylinder head

Cylinder head covers top end of cylinder. It provides space for valve mechanism, spark plug, fuel injector etc.

3. Piston

The piston is a close fitting cylindrical plunger reciprocating inside the cylinder. The power developed by the combustion of the fuel is transmitted by the piston to the crank shaft through connecting rod.

Atmiya University Rajkot

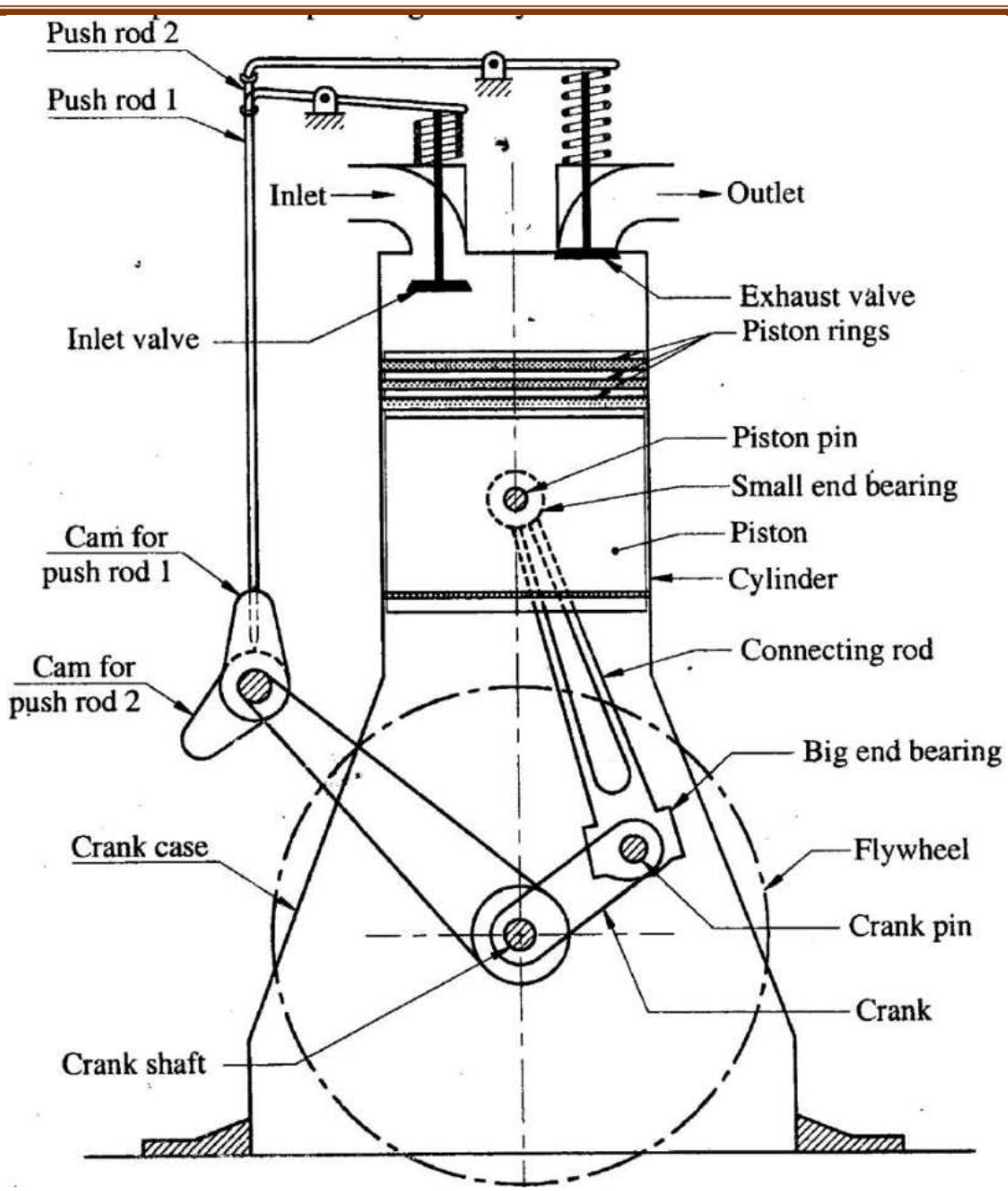

Fig. 7.2 I.C. Engine details

4. Piston Rings

The piston rings are the metallic rings inserted into the circumferential grooves provided at the top end of the piston. These rings maintain a gas-tight joint between the piston and the cylinder while the piston is reciprocating in the cylinder.

5. Piston pin or Gudgeon pin

It is the pin joining small end of the connecting rod and piston. This is made of steel by forging process.

Atmiya University Rajkot

6. Connecting rod

It is the member connecting piston through piston pin and crank shaft through crank pin. It converts the reciprocating motion of the piston into rotary motion of the crankshaft. It is usually made of steel forging.

7. Crank and Crankshaft

The crank is a lever that is connected to the big end of the connecting rod by a pin joint with its other end connected rigidly to a shaft, called crankshaft. It rotates about the axis of the crankshaft and causes the connecting rod to oscillate.

8. Valves

Engine has both intake and exhaust type of valves which are operated by valve operating mechanism (Refer fig. 7.2). The valves are the device which controls the flow of the intake and the exhaust gases to and from the engine cylinder.

9. Flywheel

It is a heavy wheel mounted on the crankshaft of the engine. It minimizes cyclic variation in speed by storing the energy during power stroke, and same is released during other stroke.

10. Crankcase

It is the lower part of the engine, serving as an enclosure of the crankshaft and also as a sump for the lubricating oil.

11. Carburetor

Carburetor is used in petrol engine for proper mixing of air and petrol.

12. Fuel pump

Fuel pump is used in diesel engine for increasing pressure and controlling the quantity of fuel supplied to the injector.

13. Fuel injector

Fuel injector is used to inject diesel fuel in the form of fine atomized spray under pressure at the end of compression stroke.

14. Spark plug

Spark plug is used in petrol engine to produce a high intensity spark for ignition of air fuel mixture in the cylinder.

Terminologies used in IC engine

1. Bore:

The inner diameter of the engine cylinder is called a bore.

2. Stroke:

It is the linear distance traveled by the piston when it moves from one end of the cylinder to the other end. It is equal to twice the radius of the crank.

3. Dead Centers:

In the vertical engines, top most position of the piston is called Top Dead Centre (TDC). When the piston is at bottom most position, it is called Bottom Dead Centre (BDC).

In horizontal engine, the extreme position of the piston near to cylinder head is called Inner Dead Centre (I.D.C.) and the extreme position of the piston near the crank is called Outer Dead Centre (O.D.C.).

4. Clearance Volume, (V_c)

It is the volume contained between the piston top and cylinder head when the piston is at top or inner dead centre.

5. Stroke volume (swept volume)

It is volume displaced by the piston in one stroke is known as stroke volume or swept volume.

Let, V_s = stroke volume, L = stroke length, d = Bore

$$V_s = \frac{\pi}{4} d^2 L$$

6. Compression Ratio

The ratio of total cylinder volume to clearance volume is called the compression ratio (r) of the engine.

Total cylinder volume $= V_c + V_s$

Compression Ratio, $$r = \frac{Total\ cylinder\ volume}{Clearance volume}$$

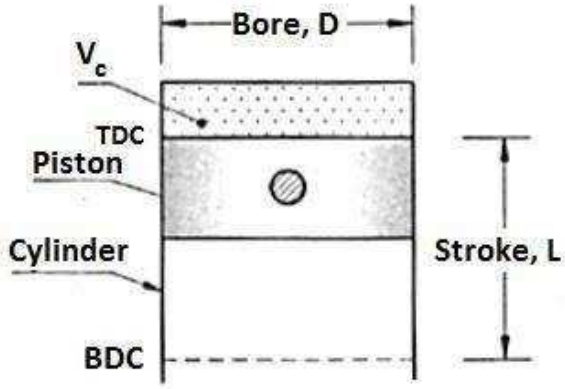

Fig. 7.3 Stroke and bore of piston

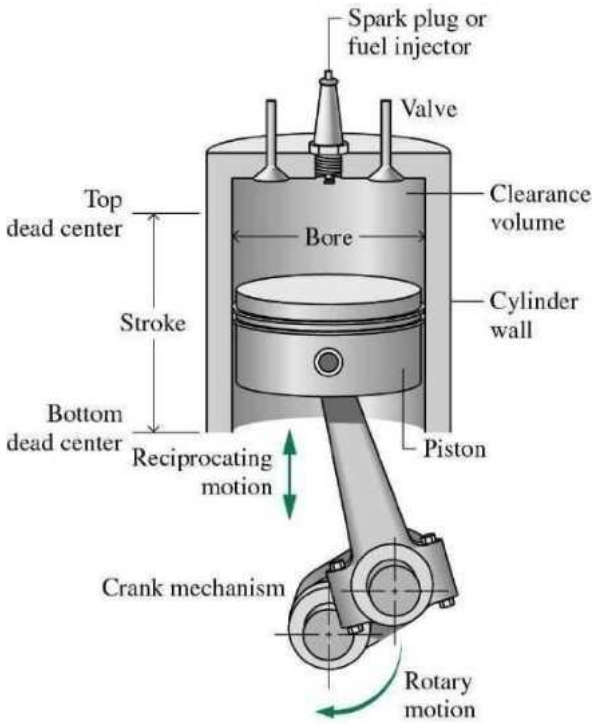

Fig 7.4 I.C engine nomenclature

Atmiya University Rajkot

$$\therefore r = \frac{V_c + V_s}{V_c}$$

For petrol engine r varies from 6 to 10 and for Diesel engine r varies from 14 to 20.

7. Piston speed

It is average speed of piston. It is equal to 2LN, where N is speed of crank shaft in rev/sec.

$$\therefore \text{Piston speed}, V_p = \frac{2LN}{60} \; m/sec$$

Where,

L = Stroke length, m

N = Speed of crank shaft, RPM

Otto four stroke cycle OR Four stroke petrol engine or Spark Ignition Four stroke engine

This engine works on Otto cycle and uses petrol (or gas) as a fuel. In this engine spark is produced to ignite the charge. This type of engines work on constant volume combustion cycle as combustion takes place nearly at constant volume with increase of pressure.

In a petrol engine, the petrol is evaporated and also it is mixed with correct proportion of air by the device which is known as carburetor.

The whole cycle is completed in four strokes, namely

1. Suction stroke
2. Compression stroke
3. Working or Power stroke
4. Exhaust stroke

All these strokes are represented on P-V diagram in fig. 7.5.

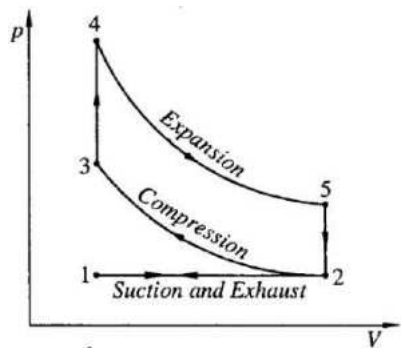

Fig. 7.5 p-V diagram of petrol engine

1. Suction stroke

During this stroke, inlet valve remains open and exhaust valve is closed, the pressure in the cylinder will be atmospheric.

Atmiya University Rajkot

The piston moves from TDC to BDC. So the volume in the cylinder increases, while simultaneously the pressure decreases. This creates a pressure difference between the atmosphere and inside of the cylinder. Due to this pressure difference the petrol and air mixture will enter into the cylinder through carburetor. This stroke is represented by the horizontal line 1-2 on the p-v diagram in fig. 7.5.

At the end of this stroke piston reaches at BDC, the cylinder will be filled completely with petrol and air mixture called charge and inlet valve is closed.

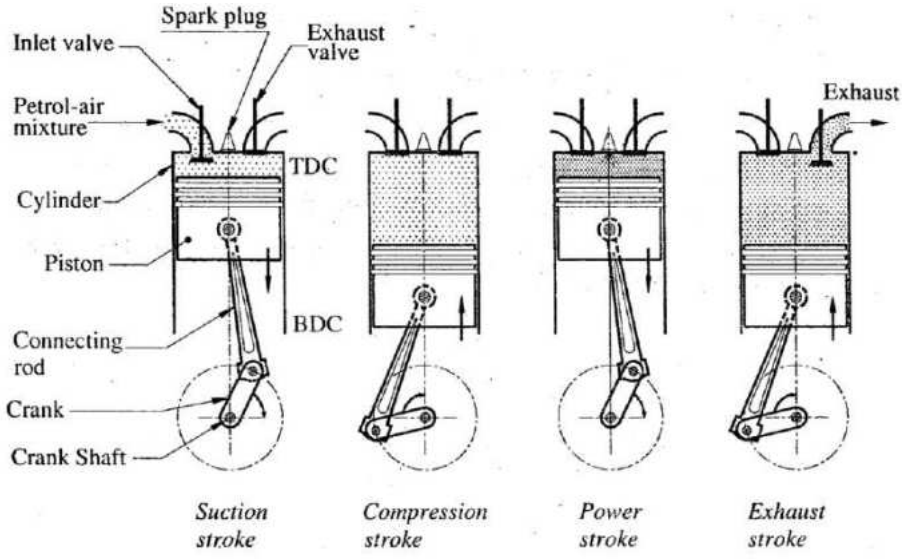

Fig. 7.6 Four stroke petrol engine

2. Compression stroke

As shown in fig., during this stroke both the inlet valve and exhaust valve remains closed. Piston moves from BDC to TDC. As this stroke is being performed, the petrol and air mixture contained in the cylinder will be compressed, so pressure and temperature of mixture increases. The process of compression is shown in fig. 7.5 by the curve 2-3.

Near the end of this stroke, the petrol and air mixture is ignited by electric spark given out by the spark plug. The combustion of the petrol releases the hot gases which will increase the pressure at constant volume. This constant volume combustion process is represented by the vertical line 3-4 on the p-V diagram.

3. Power or Expansion stroke

During this stroke both the inlet valve and exhaust valve remain closed, the piston moves from TDC to BDC. The high pressure and high temperature burnt gases force the piston to perform this stroke, called **power stroke.** This stroke is also known as **expansion or working stroke**. *The engine produces mechanical work or power during this stroke.*

As the piston moves from TDC to BDC, the pressure of hot gases gradually decreases and volume increases. This is represented by curve 4-5 on the p-V diagram.

Atmiya University Rajkot

Near the end of this stroke, the exhaust valve opens which will release the burnt gases to the atmosphere. This will suddenly bring the cylinder pressure to the atmospheric pressure. This drop of pressure at constant volume is represented by vertical line 5-2 on the p-V diagram.

4. Exhaust Stroke

During this stroke, the exhaust valve opens and the inlet valve remains closed. The piston moves from BDC to TDC and during this motion piston pushes the exhaust gases (combustion product) out of the cylinder at constant pressure. This process is shown on p-V diagram by horizontal line 2-1 in fig. 7.5.

At the end of the exhaust stroke, the exhaust valve is closed and inlet valve will open. Then there will be again a suction stroke and the same cycle will be repeated.

Diesel four stroke cycle OR Four stroke Diesel engine OR Four stroke compression ignition (C.I) engine.

The diesel engines work on the principle of Diesel cycle, also called constant pressure heat addition cycle shown in fig. 7.7. The four stroke diesel engine cycle also consists of suction, compression, power, and exhaust strokes. Fig. 7.8 shows the working and construction of a four stroke diesel engine.

The basic construction of a four stroke diesel engine is same as that of four stroke petrol engine, except instead of spark plug, a fuel injector is mounted in its place as shown in fig. 7.8. A fuel pump supplies the fuel oil to the injector at higher pressure.

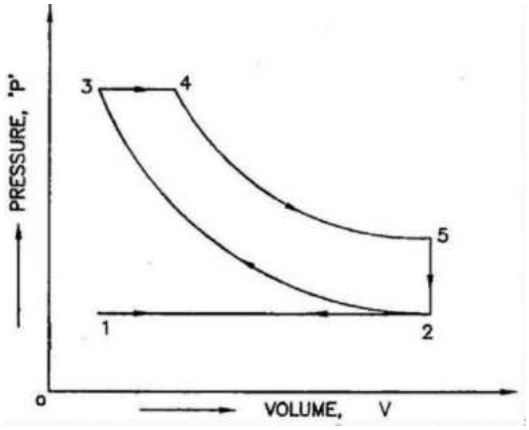

Fig. 7.7 p-V diagram of diesel engine

1. Suction Stroke

During this stroke, inlet valve remains open and exhaust valve remains closed, the pressure in the cylinder will be atmospheric. The piston moves from TDC to BDC position. Air from the atmosphere is drawn into the cylinder as the piston moves. This stroke is represented by horizontal line 1-2 on p- V diagram shown in Fig. 7.7.

At the end of this stroke, the cylinder will be filled completely with air and inlet valve will be closed.

2. Compression stroke

Atmiya University Rajkot

As shown in fig. 7.8 during this stroke, both inlet valve and exhaust valve remain closed. The piston moves from BDC to TDC. As this stroke is being performed, the air in the cylinder will be compressed, so pressure and temperature of air increases.

The compression ratio of this engine is higher than petrol engine. Due to higher compression ratio, air will have attained a higher temperature than self-ignition temperature of the diesel fuel.

Near the end of this stroke, the diesel fuel is injected into the cylinder. As the diesel fuel particles come in contact with high temperature air, it will ignite automatically. This is called auto-ignition or self-ignition. In this engine compressed air ignites the diesel fuel; this type of engine is also called as compression Ignition engine or C.I. engine.

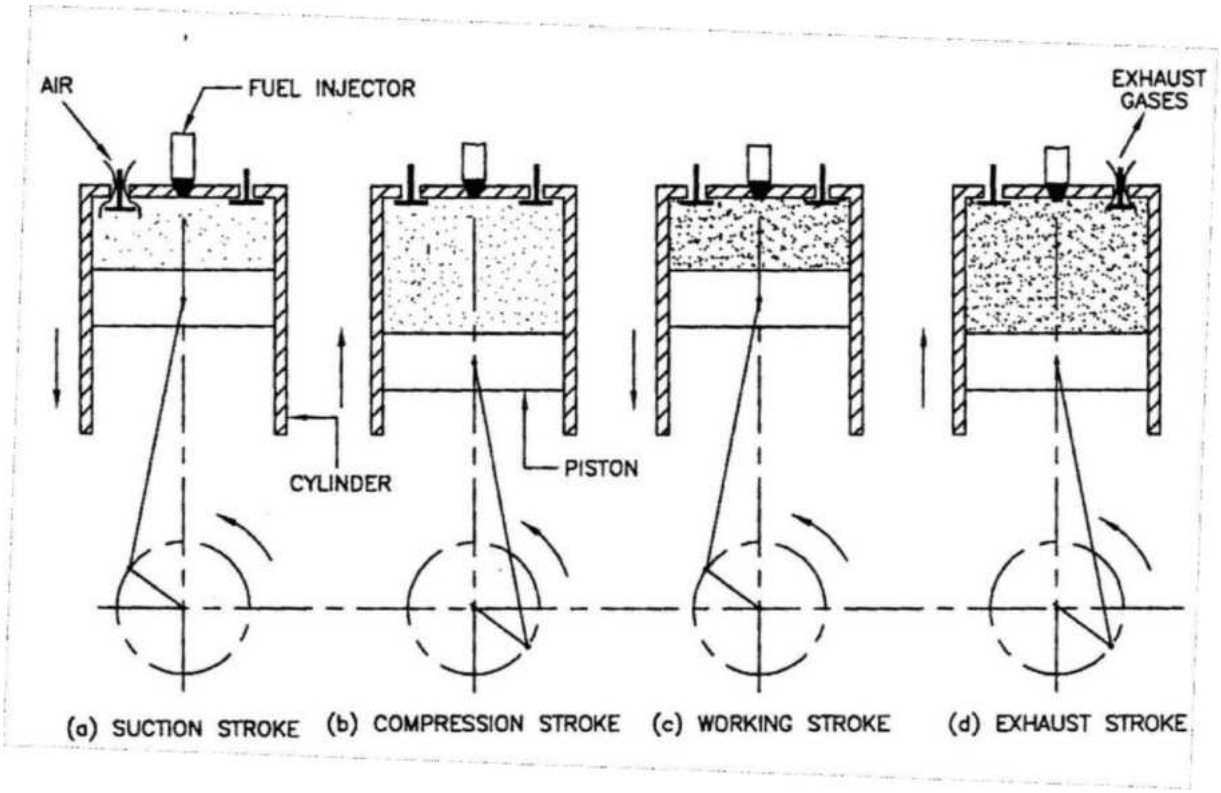

Fig. 7.8 Four stroke diesel engine

3. Power or Expansion stroke

During this stroke, both the inlet and exhaust valve remain closed. The piston moves from TDC to BDC. The fuel injection starts nearly at the end of compression stroke, but the rate of fuel injection is such that combustion maintains constant pressure. It is shown on P-V diagram by horizontal line (3-4).

The high temperature and high pressure gases expand and push the piston downward. Thus useful work is done during this stroke. As the piston moves from TDC to BDC, the pressure of hot gases gradually decreases and volume increases. This is represented by curve (4-5) on the P-V diagram shown in fig. 7.7.

As the piston reaches BDC position, the exhaust valve opens and the pressure suddenly falls nearly to atmospheric pressure at a constant volume. It is shown by line 5-2 on P-V diagram.

Atmiya University Rajkot

4. Exhaust stroke

During this stroke, the exhaust valve remains opened and inlet valve is closed. The piston moves from BDC to TDC. During this motion, piston pushes the exhaust gases (combustion product) out of cylinder at constant pressure. This process is shown on p- V diagram by horizontal line 2-1 in fig. 7.7. Again inlet valve opens and a new cycle starts.

Difference between Petrol (S.I.) engine and Diesel (C.I.) engine

Sr.	Principle	Petrol engine	Diesel engine
1	Thermodynamic cycle	Works on Otto cycle (Constant volume cycle)	Works on Diesel cycle (Constant pressure cycle)
2	Fuel used	Petrol (Gasoline)	Diesel
3	Supply of fuel	In carburetor, fuel gets mixed with air and then mixture enters the cylinder during suction stroke	Diesel is pressurized with the help of fuel pump and then injected into the engine cylinder by the fuel injector at the end of compression stroke
4	Compression ratio (r)	Low (6 to 10)	High (14 to 20)
5	Charge drawn during the suction stroke	Mixture of air and petrol	Only air
6	Fuel ignition	Compressed charge is ignited by spark plug	Fuel is ignited by the heat of compressed air no any external source is required
7	Engine speed	High (3000 RPM)	Low to medium (500 to 1500 RPM)
8	Thermal efficiency	Lower due to lower compression ratio	Higher due to higher compression ratio
9	Weight of the engine	Lighter	Heavier
10	Initial cost	Less	More
11	Maintenance cost	Less	Slightly higher
12	Running cost	Higher because petrol is costlier	Less because diesel is cheaper
13	Starting of engine	Easier starting even in cold weather	Difficult to start in cold weather

Two stroke cycle engine

As the name itself implies, all the processes in the two stroke cycle engine are completed in two strokes. In four stroke engine two complete revolutions of crank shaft is required for completing one cycle.

The cycle of operations, i.e. suction, compression, expansion and exhaust are completed in one complete revolution of the crank shaft in two stroke engines. These engines have one power stroke per revolution of the crank shaft.

Atmiya University Rajkot

In two stroke engines, there are two openings called *ports* are provided in place of valve of four stroke engines. These ports are opened and closed by reciprocating motion of the piston in the cylinder. One port is known as inlet port and another port is known as exhaust port.

Two stroke engines consist of a cylinder with one end fitted with a cylinder head and other end fitted with a hermetically sealed crankcase which enables it to function as a pump in conjunction with the piston.

Working of two stroke petrol engine

In this type of engine, since suction of petrol and air mixture into the cylinder will not take place in a separate stroke, the technique involved in the intake or suction of petrol and air mixture must be well understood before knowing the actual working of a two stroke petrol engine.

Intake of petrol and air mixture:

When the piston moves upward, as shown in fig. 7.9. Partial vacuum is created in the crankcase until its lower edge uncovers the inlet port completely as shown in fig. 7.9(A).

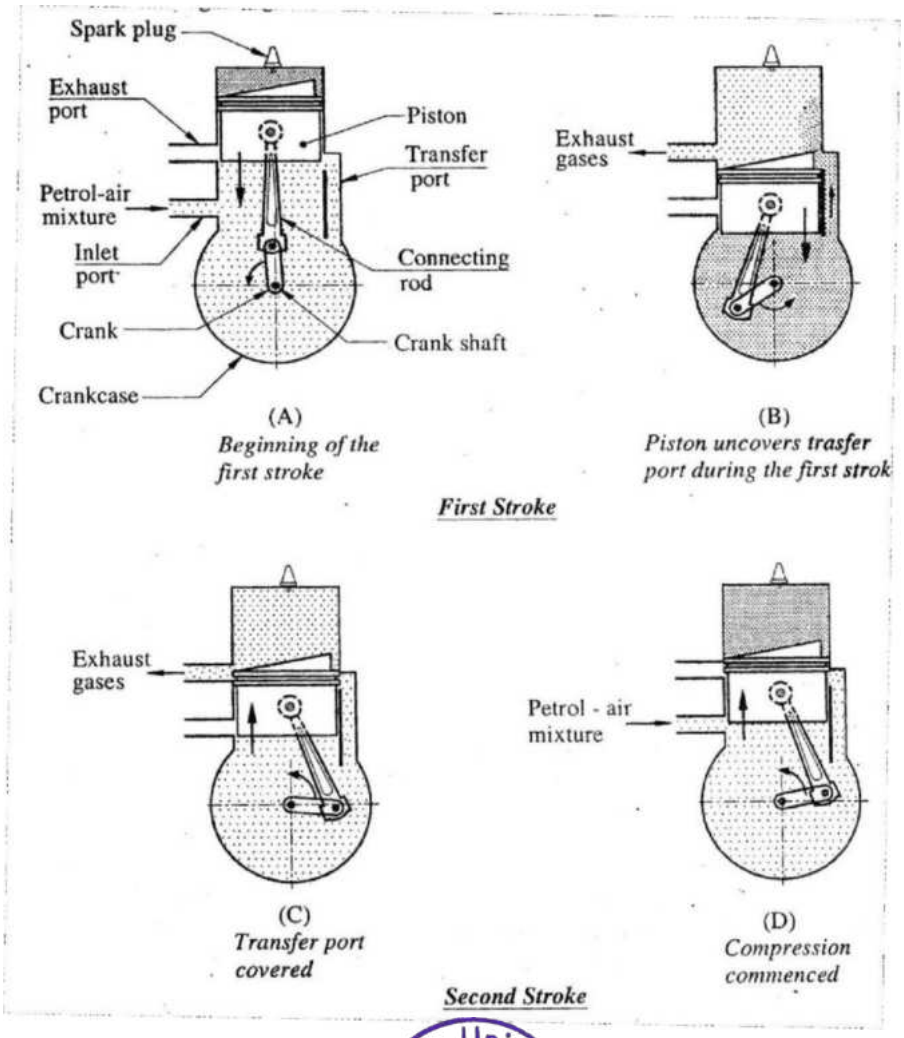

Fig. 7.9 Two stroke petrol engine

Atmiya University Rajkot

The pressure difference set up between the atmosphere and crankcase will suck the petrol and air mixture through the carburetor fitted (not shown in fig. 7.9) to inlet port, into the crankcase as shown in fig. 7.9. The suction will be continued till the inlet port is covered by the piston during its next downward stroke.

After the inlet port is covered by the piston as shown in fig. 7.9 its further downward motion will compress the charge in the crankcase up to top edge of the piston uncovers the transfer port as shown in Fig. The compressed charge flows from the crankcase to cylinder through transfer port. This will continue till the piston covers the transfer port during its next upward stroke as shown in fig. 7.9.

First stroke

At the beginning of the first stroke the piston is at TDC as shown in fig. 7.9. Piston moves from TDC to BDC. The electric spark ignites the compressed charge. The combustion of the charge will release the hot gases which will increase the pressure and temperature in the cylinder. The high pressure combustion gases force the piston downwards. The piston performs the power stroke till it uncovers the exhaust port as shown in fig. 7.10.

The combustion gases which are at a pressure slightly higher than the atmospheric pressure escape through the exhaust port. The piston uncovers the transfer port as shown in fig. 7.9. The fresh charge flows from the crankcase into the cylinder through transfer port.

The fresh charge which enters the cylinder pushes the burnt gases, so more amount of exhaust gases come out through exhaust port as shown in fig. 7.9. This sweeping out of exhaust gases by the incoming fresh charge is called ***scavenging*.** This will continue till the piston covers both the transfer and exhaust ports during next upward stroke.

Second stroke

In this stroke the piston moves from TDC to BDC. When it covers the transfer port as shown in Fig. the supply of charge stops and then when it moves further up it covers the exhaust port completely as shown in Fig. 7.9(D) stops the scavenging. Further upward motion of the piston will compress the charge in the cylinder. After the piston reaches TDC the first stroke repeats again.

Working of Two stroke diesel engine

Fig. 11 shows the construction and working of a two stroke diesel engine. The construction of diesel engine is similar to two stroke petrol engine except the fuel pump and fuel injector are there instead of carburetor and spark plug as in petrol engine. The working of diesel engine is similar to two stroke petrol engine except that only air is supplied into crank case in case of diesel engine and diesel fuel is injected at the end of compression of air.

First stroke

At the beginning of the first stroke, the piston is at TDC as shown in Fig. 7.10 Piston moves from TDC to BDC.

At TDC piston is at the end of compression, so the compressed air will attain a temperature higher than the self-ignition temperature of the diesel. The injector injects a metered quantity of the diesel into the cylinder as a fine spray. As diesel is injected, it auto ignites.

Atmiya University Rajkot

The combustion of the diesel will release the hot gases which increases the pressure and temperature in the cylinder. The piston performs the power stroke till it uncovers the exhaust port as shown in Fig.11. The hot gases have slightly higher pressure than the atmosphere. Due to this pressure difference burnt gases come out from the exhaust port.

The top edge of the piston uncovers the transfer port as shown in Fig. 7.10 the air flows from the crank case into the cylinder through transfer port. The fresh air entering the cylinder, it pushes the burnt gases, so burnt gases come out from exhaust port as shown in Fig. 7.10. This pushing out of the exhaust gases is called ***scavenging***. This will continue till the piston covers both the exhaust and the transfer ports during next upward stroke.

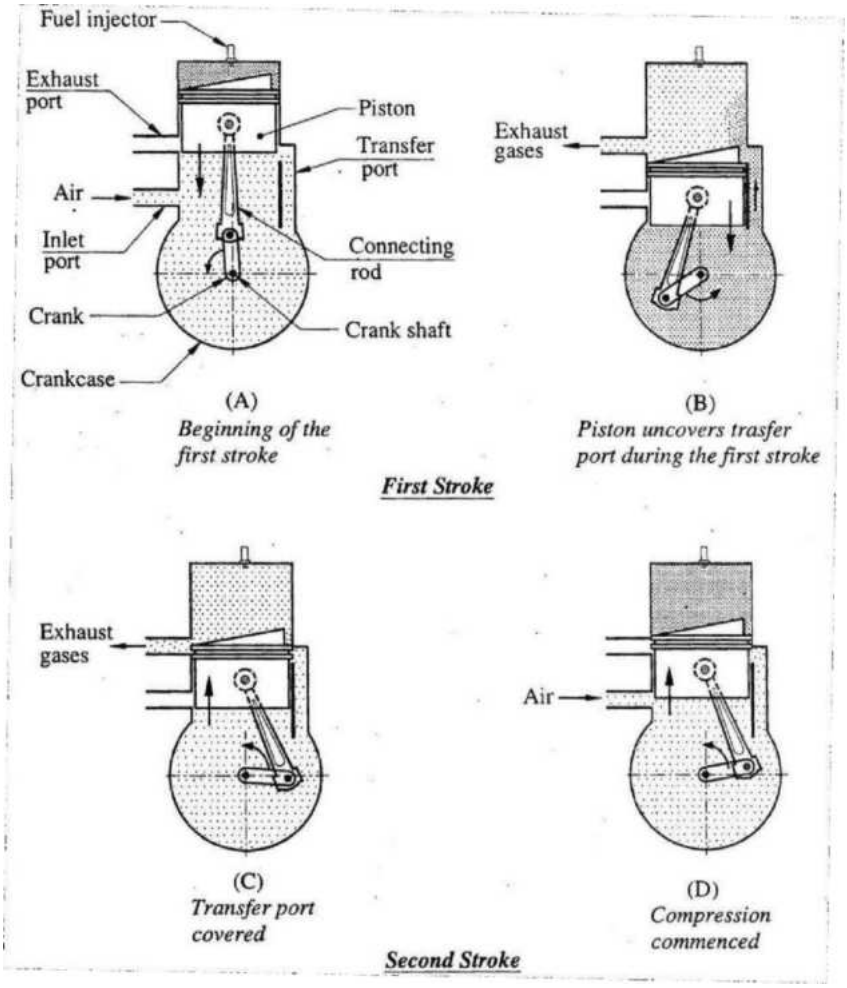

Fig. 7.10 Two stroke diesel engine

Second stroke

In this stroke the piston moves from BDC to TDC. When it covers the transfer port as shown in Fig. 7.10 the supply of air is stop and then when it moves further up it covers the exhaust port completely as shown in Fig. stops the scavenging. Further upward motion of the piston will compress the air in the cylinder. After the piston reaches TDC the first stroke repeats again.

Atmiya University Rajkot

Difference between two stroke and four stroke cycle engines

Sr.	Principle	Four stroke engine	Two stroke engine
1	No of piston strokes per cycle	4 piston strokes require to complete one cycle	Only 2 piston strokes require to complete one cycle
2	No of crank rotation per cycle	Two complete revolutions of crank shaft is required to complete one cycle	Only one complete revolutions of crank shaft is required to complete one cycle
3	No of power stroke per min	Equal to half of the speed of engine crank shaft (n = N/2)	Equal to the speed of engine crank shaft (n = N)
4	Power	Power is developed in every alternate revolution of crank shaft	Power is developed in every revolution of crank shaft
5	Flywheel	The power is developed in every alternate revolution, hence heavy flywheel is required	The power is developed in every revolution, hence lighter flywheel is required
6	Size for same power output	These engines are heavier, larger and require more space	These engines are lighter, more compact and require less space
7	Admission of charge	The charge is directly admitted into the engine cylinder during suction stroke	The charge is first admitted into the crankcase and then transferred to the engine cylinder
8	Valves	The inlet and exhaust valves are required and they are operated by valve operating mechanism	In place of valves, ports are there which opens and closes by motion of piston itself
9	Crankcase	Crankcase is not hermetically sealed	Crankcase is hermetically sealed because charge is admitted into it
10	Direction of rotation of crank shaft	The crank shaft rotates only in one direction	The crank shaft can rotates in both directions
11	Lubricating oil consumption	Less	More
12	Thermal efficiency	Higher, because there is no mixing of fresh charge with exhaust gases	Less, because there is mixing of fresh charge with exhaust gas, hence loss of fresh charge
13	Mechanical efficiency	Less, because of more no of moving parts	Higher, because of less no of moving parts
14	Uses	These engines are used in high power applications where more space is available like cars, trucks, tractors, buses, stationary uses etc.	These engines are used for low power applications where less space is available like mopeds, scooters, motor cycles, etc.

Atmiya University Rajkot

Engine performance parameters

Indicated power

The power produced inside the engine cylinder by burning of fuel is known as Indicated power (I.P.) of engine. It is calculated by finding the actual mean effective pressure.

$$Actual\ meaneffective\ pressure,\ \ P_m = \frac{sa}{l} N/m^2$$

Where,

a = Area of the actual indicator diagram, cm^2

l = Base width of the indicator diagram, cm

s = Spring value of the spring used in the indicator, $N/m^2/cm$

For four stroke engine

P_m = Mean effective pressure, N/m^2

L = Length of stroke, m

A = Area of cross section of the cylinder, m^2

N = RPM of the engine crank shaft

n = Number of power strokes per minute

$$I.P. = \frac{P_m LAn}{60000} \quad kW \qquad where\ \ n = \frac{N}{2}$$

For two stroke engine

$$I.P. = \frac{P_m LAn}{60000} \quad kW \qquad where\ \ n = N$$

Brake Power (B.P.)

It is the power available at engine crank shaft for doing useful work. It is also known as ***engine output power.*** It is measured by dynamometer.

It can be calculated as follows:

Let,

W = Net load acting on the brake drum, N

R = Effective radius of the brake drum, m

N = RPM of the crank shaft

T = Resisting torque, Nm

P_{mb} = Brake mean effective pressure

$\therefore T = W \times R \quad Nm$

$$B.P. = \frac{2\pi NT}{60000} = \frac{P_{mb} LAn}{60000} \quad kW$$

Measurement of Brake Power (B.P.)

The power output (B.P.) of the engine is measured by coupling a dynamometer to engine crank shaft. Various dynamometers are listed below:

1. Rope brake dynamometer
2. Prony brake dynamometer
3. Hydraulic dynamometer
4. Eddy current dynamometer

Friction Power

The piston connecting rod and crank are mechanical parts, moving relative to each other. They offer resistance due to friction. Therefore a certain fraction of power is lost due to friction of the moving parts.

The amount of the power lost in friction is called ***friction power.*** The friction power is the difference between the I.P. and B.P.

$$Friction\ power = I.P. - B.P.$$

Efficiencies

Mechanical efficiency:

It is defined as the ratio of the brake power to the indicated power. Mechanical efficiency is indicator of losses due to friction.

$$\eta_{mech} = \frac{B.P.}{I.P.}$$

Thermal efficiency:

It is the efficiency of conversion of the heat energy produced by the actual combustion of the fuel into the power output of the engine. It is the ratio of work done to heat supplied by fuel.

Indicated thermal efficiency = Indicated Power/ Heat supplied by fuel

$$\eta_{it} = \frac{I.P.}{m_f \times CV}$$

Where, m_f = mass of fuel supplied, Kg/sec and CV = calorific value of fuel, J/kg

Brake thermal efficiency = Brake Power/ Heat supplied by fuel

$$\eta_{bt} = \frac{B.P.}{m_f \times CV}$$

Atmiya University Rajkot

Air standard efficiency:

It is the efficiency of the thermodynamic cycle of the engine.

For petrol engine,

$$\eta_{air} = 1 - \frac{1}{(r)^{\gamma-1}}$$

For diesel engine,

$$\eta_{air} = 1 - \frac{1}{(r)^{\gamma-1}} \left[\frac{\rho^{\gamma} - 1}{\gamma(\rho - 1)} \right]$$

Relative efficiency:

It is the ratio of indicated thermal efficiency of an engine to air standard cycle efficiency.

$$\eta_{rel} = \frac{\eta_{it}}{\eta_{air}}$$

Volumetric efficiency:

It is the ratio of the volume of charge/air actually sucked at atmospheric condition to swept volume of engine. It indicates breathing capacity of the engine.

$$\eta_{vol} = \frac{\text{Actual volume of charge or air sucked at atm. condition}}{\text{Swept volume}}$$

Specific power output:

The specific output of the engine is defined as the power output per unit area.

$$Specificoutput = \frac{B.P.}{A}$$

Specific fuel consumption:

Specific fuel consumption (SFC) is defined as the amount of fuel consumed by an engine for one unit of power production. SFC is used to express the fuel efficiency of an I.C. engine.

$$SFC = \frac{m_f}{B.P.} Kg/kWh$$

Where,

m_f = Mass of fuel consumed in kg/hr and B.P. = Power produced in kW

Concept of pump & compressor

The pump is a mechanical device which conveys liquid from one place to another place.

Applications of Pumps

i. **Thermal engineering**
   a) To feed water into the boiler
   b) To circulate the water in condenser
   c) To circulate lubricating oil in the proper place
ii. **Agriculture and irrigation**
   a) To lift water from deep well
   b) To convey water from one place to another
iii. **Chemical industries**
   a) To convey liquid chemical from one place to another
iv. **Municipal water works and drainage system**
v. **Hydraulic control system**

Classification of pumps

The pump can be classified according to principle by which the energy is added to the fluid and their design feature as shown below.

Positive displacement pumps

These pumps operate on the principle of a definite quantity of liquid is discharged or displaced due to the positive, or real displacement of working elements (i.e. piston, gear, vane, screw).

i) Reciprocating pump

a) **Piston pumps**
   Single cylinder - single acting, double acting
   Double cylinder - single acting, double acting
b) **Plunger pump**
c) **Bucket pump**

ii) Rotary pump

a) Gear pump
b) Vane pump
c) Screw pump

Roto dynamic pump

These pumps operate on the principle of the rise in pressure energy of liquid by dynamic action of liquid. The dynamic action of liquid is carried out by revolving wheel which has curved vanes on it. This wheel is known as impeller.

1. **Centrifugal pump**
   a) Single stage
   b) Multi stage
2. **Propeller (Axial flow) pump**

Atmiya University Rajkot

3. **Mixed flow pump**
4. **Other**
   a) Jet Pump
   b) Air lift pump

Terminology used in pumps

Head

In the pumps, different forms of energy are expressed in terms of height which is called head.

Suction Head (h_s)

It is the vertical height of the centre line of pump shaft above the surface of liquid.

Delivery Head (h_d)

It is the vertical height measured from the centre line of pump shaft to where the liquid is delivered or energy required to lift the liquid from pump to end of delivery pipe.

Velocity Head (hv)

It is kinetic energy carried away by the liquid at the end of delivery pipe.

Mathematically, $h_v = V^2/2g$

Where, V= velocity of liquid in pipe.

Static Head (hst)

It is sum of suction and delivery heads.

Mathematically, $h_{st} = h_s + h_d$

Manometric Head (Hm)

It is the total head required to be developed by the pump.

Mathematically, $H_m = h_s + h_d + h_{fs} + h_{fd} + h_{fp} + h_v$

Where,

h_{fs} = friction head loss in suction pipe

h_{fd} = friction head loss in delivery pipe

h_{fp} = friction head loss inside the pump

Water power (Pw)

It is the power required by pump to handle the liquid to develop manometric head.

Mathematically, $P_w = \rho g Q H_m$ Where,

ρ = density of liquid (kg/m^3)

Q = liquid discharge by pump (m^3/s)

Atmiya University Rajkot

H_m = manometric head in meter

g = 9.81 m/s^2

Shaft power (P_s)

It is the power input to shaft of the pump by motor.

Efficiency of pump (η_p)

It is ratio of water power to shaft power.

Mathematically, $\eta_p = P_w / P_s$

Reciprocating pump

Reciprocating pump is a positive displacement pump. In this pump, the liquid is discharged due to the simple to and fro motion or reciprocating motion of the piston or plunger.

Components of reciprocating pump

The different components parts and their function in a reciprocating pump are as follows.

Suction Pipe

Connects source of liquid to the cylinder.

Suction Valve

Opens during suction stroke and closes at the beginning of delivery stroke.

Cylinder

Accommodates liquid during suction stroke and discharges during delivery stroke of piston or plunger.

Piston or Plunger

This is a reciprocating part which creates negative and positive pressure due to it's to and fro motion.

Delivery valve

Closes during suction stroke and opens at the beginning of delivery stroke.

Crank and connecting rod

Convert the rotary motion of the prime mover into the reciprocating motion of the piston or plunger.

Delivery Pipe

Connects pump cylinder to the storage tank.

Prime mover

To drive the pump.

Compressor

A machine which takes in air at low pressure and compress it to high pressure with the help of some suitable arrangement i.e. a reciprocating piston and cylinder arrangement or a rotary arrangement, is called an air compressor.

Uses of Compressed air

1. The compressed air has number of application in different industries. They are listed as under:
2. Operating pneumatic drill, hammers for the formation of rivet heads.
3. For filling air in automobile tyres.
4. For spray painting.
5. Increasing inlet pressure of I.C. Engine.
6. To operate air motor in mines where fire risks are more.
7. Pumping of water.
8. Gas turbine power plant.
9. Conveying the materials like sand and concrete along a pipe line.
10. For sand blasting.
11. Operating blast furnaces.
12. Operating air brakes used in buses, trucks, trains etc.

Classification of compressors

The air compressor can be classified in number of ways.

1. **According to method of compression**
   a. ***Reciprocating compressor***
   This type of compressor compresses air by reciprocating action of piston inside a cylinder. It is suitable for producing high pressure.
   b. ***Rotary Compressor***
   In a rotary compressor, air or gas is compressed due to the rotation of impeller or blades inside a casing similar to a rotary pump.
   c. ***Centrifugal compressor***
   A machine in which compression of air to desired pressure is carried out by a rotating impeller as well as centrifugal action of air.

2. **According to method delivery pressure**
   a. Low pressure - up to 1.1 bar
   b. Medium pressure - 1.1. to 8 bar
   c. High pressure – 8 to 10 bar
   d. Very high pressure - above 10 bar

3. **According to principle of operation**
   a. ***Positive displacement***
   In this type, pressure of air is increased by reducing the volume of it. Here air is compressed by positive displacement of air with piston or with rotating element. These are capable with low volume flow rate. Examples: Reciprocating compressor, Roots Blower etc.

Atmiya University Rajkot

b. Roto dynamic or steady flow compressor

In this type, compression of air is carried out by a rotating element imparting velocity to the flowing air and developed desired pressure. Here compression is achieved by dynamic action of rotor. Examples: Centrifugal, Axial flow, etc.

4. According to the number of stages

a. Single stage compressor - pressure up to 5 bar
b. Multistage compressor - pressure above 5 bar

5. According to method the number of cylinder

a. Single cylinder
b. Multi cylinder

6. According to method the pressure limit

a. Fans - pressure ratio 1 to 1.1
b. Blowers - pressure ratio 1.1 to 2.5
c. Compressor - pressure ratio above 2.5

7. According to volume of air delivered

a. Low capacity - volume flow rate up to 9 m^3/min
b. Medium capacity - volume flow rate 10 m^3/min to 300 m^3/min
c. High capacity: Volume flow rate above 300 m^3/min

8. According to fluid to be compressed

a) Air compressor
b) Gas compressor
c) Vapour compressor

Concept of Refrigeration & Air conditioning

In heat engine, heat flow from hot body to cold body and produce useful work. If it operates in the reverse direction, it takes heat from a cold body and rejects it to a hot body by the external mechanical work known as reversed heat engine. This principle is used in heat pump and refrigerator.

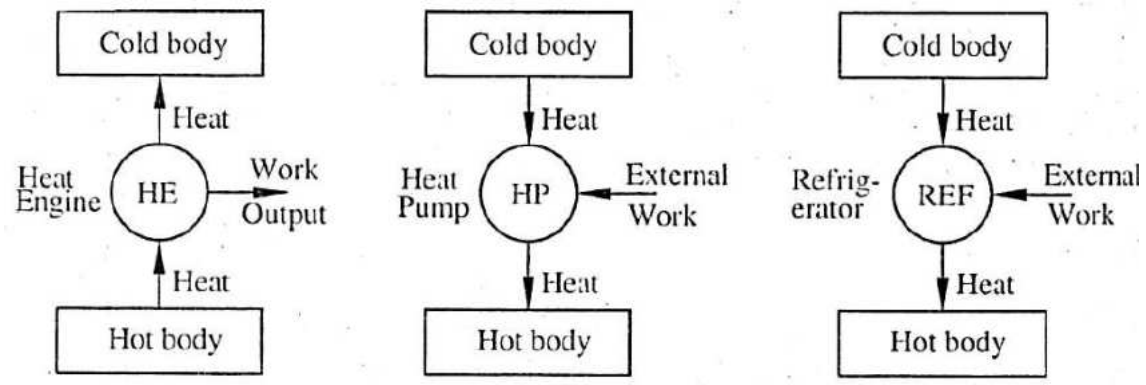

Figure 10.1 Heat Engine, Heat Pump and Refrigerator

Heat pump

It is device which absorbs the heat from cold body (surrounding) and deliver to hot body as shown in fig. and maintain constant temperature of hot body for useful purpose. In this devise, external workrequired to convey heat from cold body to hot body.

Refrigerator

It is a device which removes heat from cold body and reject to hot body (surrounding) and maintains low temperature for useful purpose. In this device, external work is required to convey heat from cold body to hot body.

It is a device or system used to maintain the low temperature below the atmosphere temperature within required space.

Principle of refrigeration

In refrigeration, the heat is to be removed continuously from a system or space at a lower temperature and transfer to the surrounding at a higher temperature. In this process, according to second law of thermodynamics external work is required to convey heat from cold body to hot body. Therefore in refrigeration, power is required to cool the space below the atmospheric temperature.

Refrigeration is defined as the method of reducing the temperature of a system below surrounding temperature and maintains it at the lower temperature by continuously abstracting the heat from it. In simple, refrigeration means the cooling or removal of heat from a system.

Atmiya University Rajkot

Refrigerants

The refrigerant is a heat carrying medium which absorbs heat from space (desired to cool) and rejects heat to outside the refrigerator (in atmosphere). The refrigerant is working medium under goes various processes of refrigeration cycles which are used to produce refrigeration.

Properties of a good refrigerant

a) It should have high latent heat of evaporation and low specific volume.
b) It should have good thermal conductivity for rapid heat transfer.
c) It should be non-toxic, non-flammable and non-corrosive.
d) It should have low specific heat in liquid state and high specific heat in vapour state.
e) It should have high co-efficient of performance.
f) It should be economical in initial cost and maintenance cost.

Application of refrigeration

a) Storage and transportation of food stuffs as dairy products, fruits, vegetables, meat, fishes etc.
b) Preservation of medicines and syrups.
c) Manufacturing of ice, photographic films, rubber products.
d) Processing of petroleum and other chemical products.
e) Liquification of gases like N_2, O_2, H_2 etc.
f) Cooling water.
g) Comfort air conditioning of auditoriums, hospitals, residence, offices, factories, hotels, computer rooms etc.

Refrigerants commonly used in practice

1) NH_3 (Ammonia)

Properties

Highly toxic, flammable, good thermal properties, highest refrigerating effect per kg of refrigerant.

Uses

It is widely used in large industrial and commercial refrigeration system. It is mostly used with Vapour absorption refrigeration cycle like ice plants, cold storage, packing plants etc.

2) CO_2 (Carbon dioxide)

Properties

Colorless, non-toxic, non-flammable and non-corrosive gas. It gives low refrigeration effect.

Uses

It is used in marine refrigeration system.

3) Air

Properties

Easily available without cost, non-toxic, completely safe refrigerant, low COP.

Uses

It is used in aircraft air-conditioning system.

Atmiya University Rajkot

4) R-11 (Trichloro monofluoro methane) or Freon-11

Properties

Non-toxic, Non-flammable and Non-corrosive.

Uses

It is used in Small office buildings and factories for refrigeration.

5) R-12 (Dichlaro - difluro methane) or Freon -12

Properties

Non -toxic, Non-flammable, Non-explosive, high COP and most suitable refrigerant.

Uses

It is used in domestic vapour compression refrigeration.

6) R-22 (Monochloro - difluro methane) or Freon -22

Properties

Non-toxic, Non-flammable, Non-explosive Required less compressor displacement.

Uses

It is used in commercial and industrial low temperature applications (in air conditioning).

Refrigeration effect and unit of refrigeration

Refrigeration effect

It is define as the amount of heat absorbed by refrigerant from the space to be cooled.

The capacity of refrigeration system is expressed in tons of refrigeration which is unit of refrigeration.

1 ton of refrigeration

It is defined as refrigerating effect produced by melting of 1 ton of ice from and at 0°C in 24 hours.

OR

Amount of heat required to remove in order to form one ton of ice in 24 hours from water at temperature 0 ^{0}C.

The latent heat of ice is 335 kJ/kg, the refrigeration effect produced by 1 ton ice in 24 hours is,

$$= \frac{335\times1000}{24} KJ/hr = 14000\, KJ/hr = \frac{14000}{60} KJ/\min = 232.6\, KJ/\min = \frac{232.6}{60} KJ/s = 3.8888 KW$$

In actual practice, 1 ton = 900 kg considered for calculation of 1 ton of refrigeration,

$$\therefore 1 \text{ ton} = \frac{335\times 900}{24\ hr} KJ/ = 210\, KJ/\min = 3.5 KW$$

$$\therefore 1 \text{ ton of refrigeration} = 210\, KJ/\min = 3.5 KW$$

Co-efficient of performance

It is defined as the ratio of refrigerating effect to work required compressing the refrigerant in the compressor. It is the reciprocal of the efficiency of a heat engine. Thus the value of COP is greater than unity.

Mathematically, $COP = \frac{\text{Refrigerating effect}}{\text{Work of compressor}}$

Types of refrigerators

The refrigerator can be classified as follows.

1. Natural refrigerator

In natural refrigerator, the cooling effect produced by evaporation of liquid or sublimation of solids. When liquid evaporate, it absorbs heat from surrounding and produces cooling. Similarly, in sublimation (melting) of solid, it absorbs heat from surrounding and produces cooling effect.

2. Mechanical refrigerator

In mechanical refrigerator, refrigeration effect produced by, external source of mechanical energy or heat energy.

It is further classified as,

1. Vapour compression refrigerator
2. Vapour absorption refrigerator
3. Air refrigerator

Air conditioning

Air conditioning is not a process of only heating or cooling to some desired temperature. Air conditioning is dealing with conditioning or controlling the air. The complete process of air conditioning includes following processes.

1. Cooling or heating air
2. Addition of moisture in air (Humidification) or removal of moisture from air (Dehumidification)
3. Controlling movement of air
4. Purification of air
5. Addition of fresh air from outside
6. Distribution of air

The **air conditioning** is defined as the simultaneous control of temperature, air humidity, air movement and air cleanliness.

Applications of air conditioning

For Human comfort

To provide cooling or heating and conditioning of air as per comfort of human being. This is known as comfort air conditioning.

For commercial use

To provide cooling or heating and conditioning air as per required in some engineering manufacturing and processing. This is known as industrial air conditioning.

The comfort air conditioning means conditioning of air in such a way that the human being can feel good.

Principle of air conditioning

In air conditioning system, the device or unit provides air conditioning is called air conditioner. This device continuously draws air from an indoors space which is required to cool, it cools in refrigeration system and discharge back into the same indoor space. This continuous cyclic process of drawing, cooling, and recirculation of the cooled air maintains indoor space cool at the required lower temperature which is required for comfort cooling.

Components of air conditioning system

The basic components of air conditioning system are,

1. Fans: For circulation of air
2. Filters: For cleaning air
3. Heating element: Heating of air (It may be electric heater, steam, hot water)
4. Control system: It regulates automatically the amount of cooling or heating.
5. Grille: It adjusts the direction of conditioned air to the room.
6. Tray: It collects condensed water

Classification of Air conditioning system

1. **According to arrangement of equipments**
   a. Unitary system

   In this system different component of air conditioning system is manufactured and assembled as unit in a factory. This unit is installed in or near to space to be conditioned.

   Example : Window air conditioner and Split air conditioner

   b. Central system

   In this system different components are manufactured in factory and assembled at the site. This type of system is used for conditioning of air in theatres, cinemas, restaurants, exhibition halls, big factory space etc.
2. **According to the purpose**
   a. Comfort air conditioning system
   b. Industrial air conditioning system
3. **According to season of year**
   a. Winter air conditioning system
   b. Summer air conditioning system

Atmiya University Rajkot

INTRODUCTION

TO

MANUFACTURING PROCESS

Hardik N. Chauhan

Assistant Professor

Department of Mechanical Engineering

Faculty of Engineering & Technology

Atmiya University

hardik.chauhan@atmiyauni.ac.in

2022-2023

Atmiya University Rajkot

CLASSIFICATION OF PRODUCTION SYSTEMS

Production systems can be classified as Job-shop, Batch, Mass and Continuous production systems.

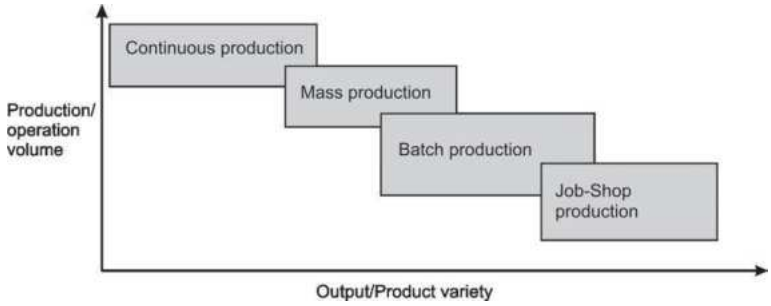

Fig. 1 Classifications of production systems

Job-Shop Production

Job-shop production are characterized by manufacturing one or few quantity of products designed and produced as per the specification of customers within prefixed time and cost. The distinguishing feature of this is low volume and high variety of products.

A job-shop comprises of general-purpose machines arranged into different departments. Each job demands unique technological requirements, demands processing on machines in a certain sequence.

Job-shop Production is characterized by:

1. High variety of products and low volume.
2. Use of general purpose machines and facilities.
3. Highly skilled operators who can take up each job as a challenge because of uniqueness.
4. Large inventory of materials, tools, parts.
5. Detailed planning is essential for sequencing the requirements of each product, capacities for each work centre and order priorities.

Aniya University Rajkot

Advantages

Following are the advantages of Job-shop Production:

1. Because of general purpose machines and facilities variety of products can be produced.
2. Operators will become more skilled and competent, as each job gives them learning opportunities.
3. Full potential of operators can be utilized.
4. Opportunity exists for Creative methods and innovative ideas.

Limitations

Following are the limitations of Job-shop Production:

1. Higher cost due to frequent set up changes.
2. Higher level of inventory at all levels and hence higher inventory cost.
3. Production planning is complicated.
4. Larger space requirements.

Batch Production

American Production and Inventory Control Society (APICS) defines Batch Production as a form of manufacturing in which the job pass through the functional departments in lots or batches and each lot may have a different routing. It is characterized by the manufacture of limited number of products produced at regular intervals and stocked awaiting sales.

Batch Production is characterized by

1. Shorter production runs.
2. Plant and machinery are flexible.
3. Plant and machinery set up is used for the production of item in a batch and change of set up is required for processing the next batch.

Atmiya University Rajkot

4. Manufacturing lead-time and cost are lower as compared to job order production.

Advantages

Following are the advantages of Batch Production:

1. Better utilization of plant and machinery.
2. Promotes functional specialization.
3. Cost per unit is lower as compared to job order production.
4. Lower investment in plant and machinery.
5. Flexibility to accommodate and process number of products.
6. Job satisfaction exists for operators.

Limitations

Following are the limitations of Batch Production:

1. Material handling is complex because of irregular and longer flows.
2. Production planning and control is complex.
3. Work in process inventory is higher compared to continuous production.
4. Higher set up costs due to frequent changes in set up.

Mass Production

Manufacture of discrete parts or assemblies using a continuous process are called *Mass Production*.

This production system is justified by very large volume of production. The machines are arranged in a line or product layout. Product and process standardization exists and all outputs follow the same path.

Mass Production is characterized by

1. Standardization of product and process sequence.

Atmiya University Rajkot

2. Dedicated special purpose machines having higher production capacities and output rates.

3. Large volume of products.

4. Shorter cycle time of production.

5. Lower in process inventory.

6. Perfectly balanced production lines.

7. Flow of materials, components and parts is continuous and without any back tracking.

8. Production planning and control is easy.

9. Material handling can be completely automatic.

Advantages

Following are the advantages of Mass Production:

1. Higher rate of production with reduced cycle time.

2. Higher capacity utilization due to line balancing.

3. Less skilled operators are required.

4. Low process inventory.

5. Manufacturing cost per unit is low.

Limitations

Following are the limitations of Mass Production:

1. Breakdown of one machine will stop an entire production line.

2. Line layout needs major change with the changes in the product design.

3. High investment in production facilities.

4. The cycle time is determined by the slowest operation.

Atmiya University Rajkot

Continuous Production

Production facilities are arranged as per the sequence of production operations from the first operations to the finished product. The items are made to flow through the sequence of operations through material handling devices such as conveyors, transfer devices, etc.

Continuous Production is characterized by

1. Dedicated plant and equipment with zero flexibility.
2. Material handling is fully automated.
3. Process follows a predetermined sequence of operations.
4. Component materials cannot be readily identified with final product.
5. Planning and scheduling is a routine action.

Advantages

Following are the advantages of Continuous Production:

1. Standardization of product and process sequence.
2. Higher rate of production with reduced cycle time.
3. Higher capacity utilization due to line balancing.
4. Manpower is not required for material handling as it is completely automatic.
5. Person with limited skills can be used on the production line.
6. Unit cost is lower due to high volume of production.

Limitations

Following are the limitations of Continuous Production:

1. Flexibility to accommodate and process number of products does not exist.
2. Very high investment for setting flow lines.
3. Product differentiation is limited.

Atmiya University Rajkot

Various Departments of Manufacturing Unit

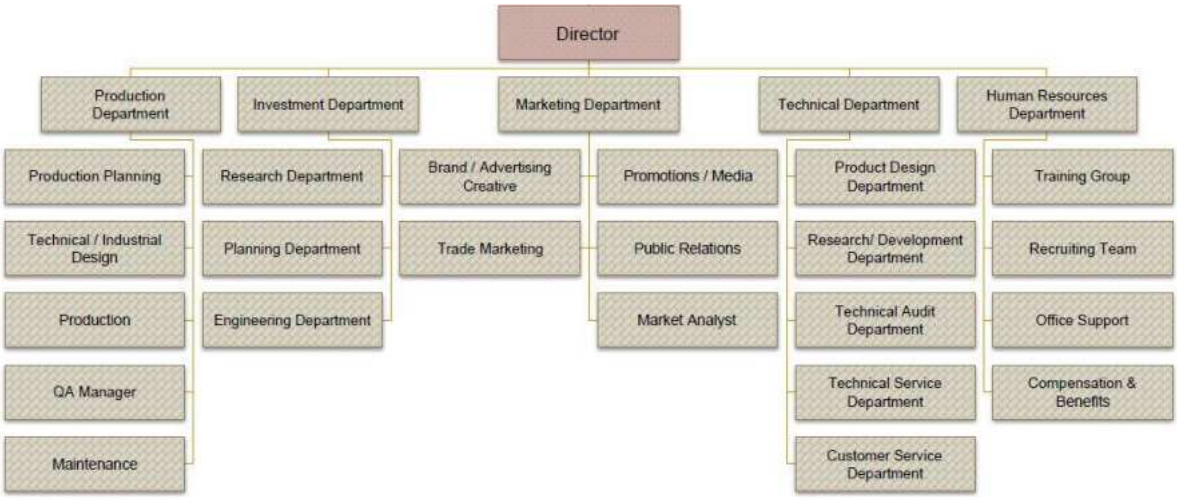

Functions of Various Departments

Every organisation is made up of different department. Each department contributes to the running of the business. The most common departments are:

- Production
- Marketing & Sales
- Finance
- Human resource
- and in some cases, Information Technology departments

Production Department

The production department is responsible for converting inputs into outputs through the stages of production processes. The Production Manager is responsible for making sure that raw materials are provided and made into finished goods effectively. He or she must make sure that work is carried out smoothly, and must supervise procedures for making work more efficient and more enjoyable.

There are five production sub-functions

Atmiya University Rajkot

- **Production and planning.**

They will set the standards and targets at each stage of the production process. The quantity and quality of products coming off a production line will be closely monitored.

- **Purchasing department**

This department will provide the materials, components and equipment required. An essential part of this responsibility is to ensure that stocks arrive on time and are of good quality

- **The stores department**

The stores department are responsible for stocking all the necessary tools, , raw materials and equipment required to service the manufacturing process.

- **The design and technical support department**

They are responsible for the design and testing of new product processes and product types, together with the development of prototypes through to the final product.

- **The works department**

This department is concerned with the manufacture of products. This will include the maintenance of the production line and other necessary repairs. The works department may also have responsibility for quality control and inspection.

Human resource Department

The role of Human resource department is in charge of recruiting, training, and the dismissal of employees in an organisation.

- **Recruitment and selection**

- **Training programmes**

Training programs are held by the HRD to improve the employees skills, as well as to motivate them. There are three main types of training :

Atmiya University Rajkot

- Induction training

- On-the- job training
- Off-the-job training

- **Manpower Planning**

The HR department needs to think ahead and establish the *number* and *skills* of the workforce required by the business in the future. Failure to do this could lead to too few or too many staff or staff with inappropriate needs.

- **Dismissal and Redundancy (retrenchment)**

Dismissal is where a worker is told to leave their job due to unsatisfactory work or behaviour.
Redundancy is when the business needs to reduce the number of employees either because it is closing down a branch or needs to reduce costs due to falling profits. It may also be due to technological improvements, and the workers are no longer needed.

Marketing department

These are the main section of the market departments:

- **Sales department** is responsible for the sales and distribution of the products to the different regions.
- **Research & Department** is responsible for market research and testing new products to make sure that they are suitable to be sold.
- **Promotion department** decides on the type of promotion method for the products, arranges advertisements and the advertising media used.
- **Distribution department** transports the products to the market.

Finance Department

- **Book keeping procedures**
  Keeping records of the purchases and sales made by a business as well as capital spending.
- **Preparing Final Accounts**
  Profit and loss account and Balance Sheets

Atmiya University Rajkot

- **Providing management information**
  Managers require ongoing financial information to enable them to make better decisions.
- **Management of wages**
  The wages section of the finance department will be responsible for calculating the wages and salaries of employees and organising the collection of income tax and national insurance for the Inland Revenue.
- **Raising Finance**
  The finance department will also be responsible for the technical details of how a business raises finance e.g. through loans, and the repayment of interest on that finance. In addition it will supervise the payment of dividends to shareholders.

Different Departments / Offices In An Organization

- In most organization especially big ones, different departments or office units are found within the organization. Each department or office is responsible for a specific function.
- In your school for example, you may find the office of the principal, vice principal, bursar, etc.

The following are different department or offices that may be found in a large organization:

1) **Administrative Department**: This is the central control unit of an organization that is charged with responsibilities of directing, organising and coordinating the activities of all other departments in an organisation to ensure the organisation's objectives are achieved.

2) **Sales Department**: Production Is not completed until the goods got to the final consumer, therefore sales department is in charge of ensuring that the finished goods (products) get to their final consumer.

3) **Accounting Department**: This department handles all financial matters or transactions of the organization.

Atmiya University Rajkot

4) **Purchasing/Procurement Department**: This Department is charged with the responsibility of acquiring raw materials that will be used in the production of the company products.

5) **Personnel Department**: This department performs an important functions of hiring, training of new staff and retraining of old Staff as well as ensuring Staff welfare.

6) **Planning Department**: Planning is an important aspect of business, any organization but fails to plan ahead, will definitely must perform as expected, therefore the planning department takes charge of ensuring that the organization's plans ahead in order to device ways of achieving their goals.

7) **Transport Department**: This department is in charge of delivering raw materials to the production site as well as taking the finished shed products to areas or places they are needed.

8) **Security Department**: This department ensures the security and safety of all staff and the organization Assets.

9). **Research And Development Department**: This department is in charge of carrying out research to discover ways of improving the company's products so as to remain competitive in the market while striving to satisfy the consumer's want.

Atmiya University Rajkot

What is MSME? – An Introduction

MSME stands for Micro, Small, and Medium Enterprises. In accordance with the Micro, Small, and Medium Enterprises Development (MSMED) Act in 2006, the enterprises are classified into two divisions.

1. **Manufacturing enterprises** – engaged in the manufacturing or production of goods in any industry
2. **Service enterprises** – engaged in providing or rendering services

The Government of India has enacted the Micro, Small and Medium Enterprises Development (MSMED) Act, 2006 in terms of which the definition of micro, small and medium enterprises is as under:

- Enterprises engaged in the manufacture or production, processing or preservation of goods as specified below:
    - A micro enterprise is an enterprise where investment in plant and machinery does not exceed Rs. 25 lakh;
    - A small enterprise is an enterprise where the investment in plant and machinery is more than Rs. 25 lakh but does not exceed Rs. 5 crore;
    - A medium enterprise is an enterprise where the investment in plant and machinery is more than Rs.5 crore but does not exceed Rs.10 crore. In case of the above enterprises, investment in plant and machinery is the original cost excluding land and building and the items specified by the Ministry of Small Scale Industries vide its notification No.S.O.1722(E) dated October 5, 2006 .
- Enterprises engaged in providing or rendering of services and whose investment in equipment (original cost excluding land and building and furniture, fittings and other items not directly related to the service rendered or as may be notified under the MSMED Act, 2006 are specified below.
    - A micro enterprise is an enterprise where the investment in equipment does not exceed Rs. 10 lakh;
    - A small enterprise is an enterprise where the investment in equipment is more than Rs.10 lakh but does not exceed Rs. 2 crore;
    - A medium enterprise is an enterprise where the investment in equipment is more than Rs. 2 crore but does not exceed Rs. 5 crore.

Atmiya University Rajkot

Manufacturing Processes Classification

There are six basic / fundamental classifications of manufacturing processes.

1. Metal casting or Molding: expendable mold and permanent mold

2. Metal Forming and Shearing: rolling, forging, extrusion, drawing, sheet forming, powder metallurgy

3. Material Removal Processes / Machining Processes: turning, boring, drilling, milling, planing, shaping, broaching, grinding, ultrasonic machining, chemical machining, electrical discharge machining (EDM), Abrasive flow machining (AFM), abrasive jet machining (AJM), electrochemical machining, high-energy beam machining, laser beam machining (LBM) etc.

4. Joining: welding, brazing, soldering, diffusion bonding, adhesive bonding, mechanical joining, plasma arc, plasma MIG, projection welding, ultrasonic, electron beam welding, laser welding etc.

5. Finishing (painting, anti-corrosion coatings, etc.)

7. Rapid Manufacturing: stereo-lithography, selective laser sintering, fused deposition modeling, three dimensional printing, laminated object manufacturing, laser engineered net shaping

DIFFERENT TYPES OF MANUFACTURING PROCESSES

Manufacturing is defined as the conversion of raw materials into the finished goods on a large scale using man and machine whereas manufacturing processes are defined as the methods used for conversion of raw materials into finished products. Based on the product requirement there different types of manufacturing processes which are used to get the required output.

In this article, you are going to learn about the seven types manufacturing processes and their subtypes with examples.

Atmiya University Rajkot

Types of Manufacturing Processes

Some websites mention four types of manufacturing processes while some mention five types of manufacturing processes. Although, Wikipedia lists 7 main types of manufacturing processes which we are going to discuss below.

7 Main types of Manufacturing Processes and their subtypes

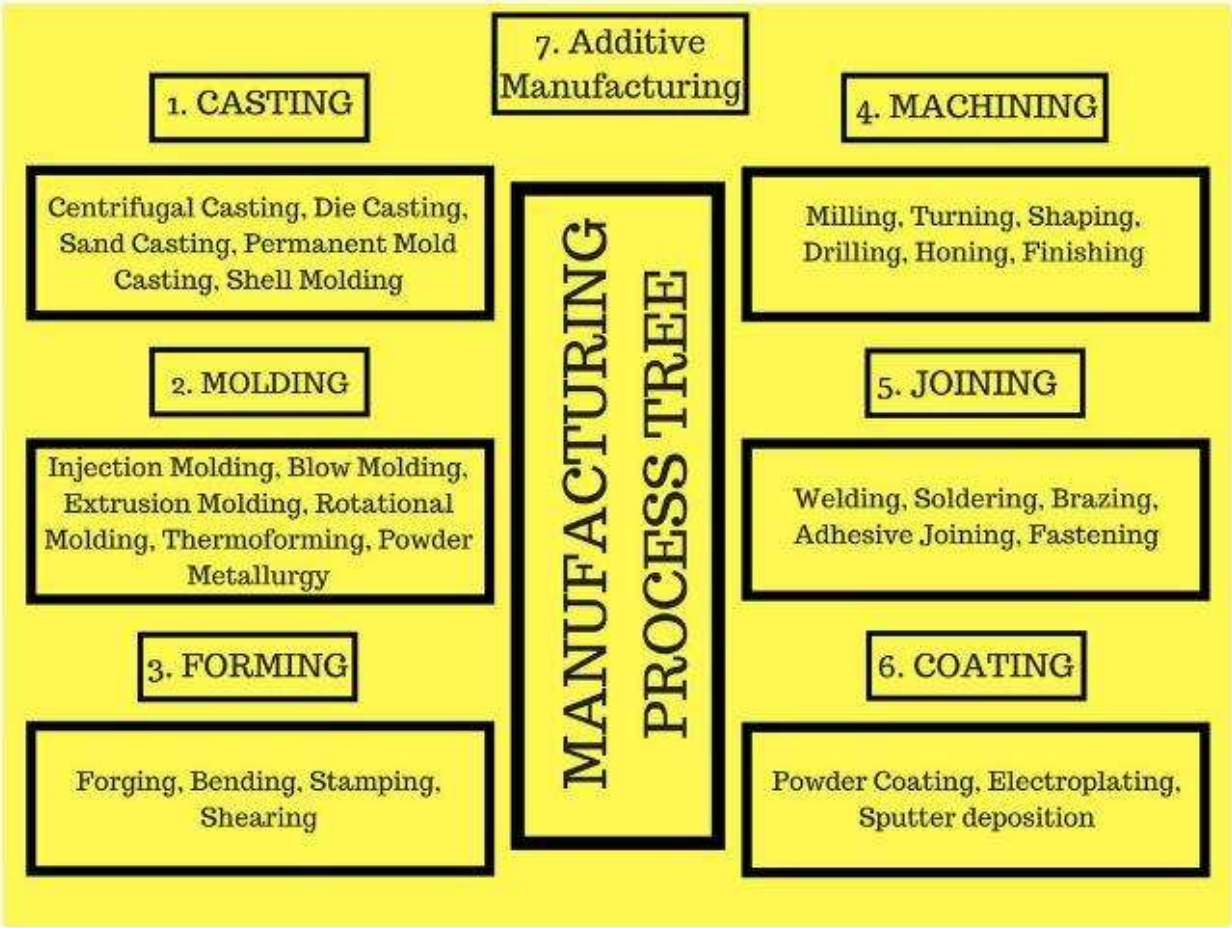

1. Casting

Casting is a process of pouring liquid metal into a mold containing the hollow shape of the desired outcome. It uses sprue, gates, and runners to pour the metal. The main types of manufacturing processes under casting are:-

Centrifugal Casting

Centrifugal casting is a process of pouring molten metal into a spinning die. Spinning die creates high g-forces to the molten metal which gives it the cylindrical shape. Moreover, spinning let the impurities (less dense material) to float at the inner dia from where it is removed later. Spinning can either be on a vertical or horizontal axis

Rajkot

depending on the configuration of the desired part such as vertical rotation is used to cast ring and cylinder and horizontal rotation is used to cast tubular shapes.

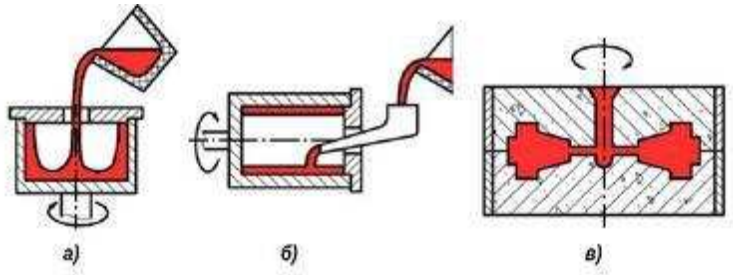

Example: Some examples of centrifugal casting include jet engine compressor cases, petrochemical furnace tubes, military products, and other high-reliability applications.

Die Casting

Die casting is a manufacturing process used for producing metal parts where high precision is required. This process is accomplished by forcing molten metal under high pressure into reusable metal dies. High volume production is done using this process.

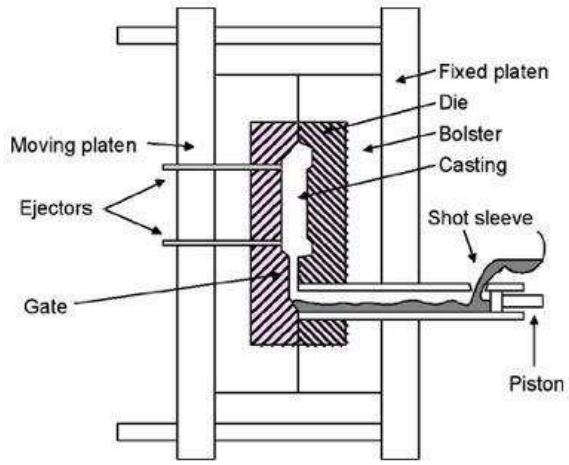

Process

- Steel molds capable of producing several castings at once are produced.
- Molds are mounted securely in a die casting machine and are arranged so that one is stationary while the other is moveable.
- The die cavity is injected with molten metal and allowed to solidify and the part is ejected.

Example: Die casting process is used for producing precise non-ferrous metal parts. Some examples of die casting include engines, clutch housings, and covers of a four-wheeled vehicle.

Sand Casting

Sand casting is a metal casting process that uses sand as the mold material. This process

Atmiya University Rajkot

has a low production rate as the sand mold must be destroyed in order to remove the part. Although, it is a cheap process when low volume production is required.

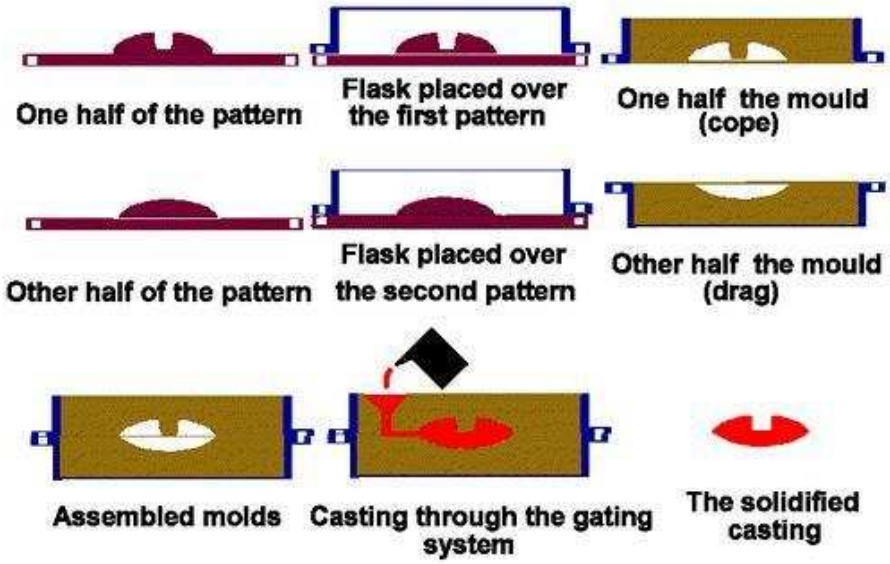

Process

- Furnace, metal, pattern, and sand mold are used in the sand casting process.
- The molten metal is poured using ladle into the cavity of the sand mold, which is made from the pattern.
- The casting is allowed to solidify and then removed by breaking the mold.

Example: More than 70% of all metal castings are produced via sand casting process. Some examples of sand casting process include engine blocks, machine tool bases, cylinder heads, pump housings, valves, gears, pulleys, crankshafts, connecting rods, and propellers.

Permanent Mold Casting

Permanent mold casting is a manufacturing process that offers reusability of metal molds which makes it eligible for high volume production. This process uses gravity or vacuum or gas to fill the mold.

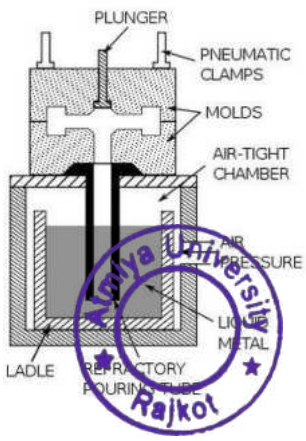

Process

- The mold is preheated and a ceramic coating is applied to the mold cavity surfaces to facilitate part removal.
- The molten metal is poured from a ladle and gravity or vacuum is used to raise the molten metal into the mold assembly.
- The casting is allowed to solidify and then removed by opening the mold assembly.

Example: Some examples of permanent mold casting include gears, pipe fittings, fuel injection housings, splines, wheels, gear housings, engine pistons.

Note the difference: Sand casting uses an expendable mold which is destroyed after each cycle whereas permanent mold casting and die casting uses a metal mold that is reused for several thousand times. Permanent mold casting process is considerably slower, and not as precise as die casting. Also, an external force is used to inject molten metal in die casting as compared to gravity or vacuum in permanent mold casting.

Investment Casting

Investment casting is metal casting process of pouring molten metal into an expendable ceramic mold. This process is also known as "lost-wax casting" as the wax pattern is melted out of the mold when molten metal is poured. Complex parts are made using this process.

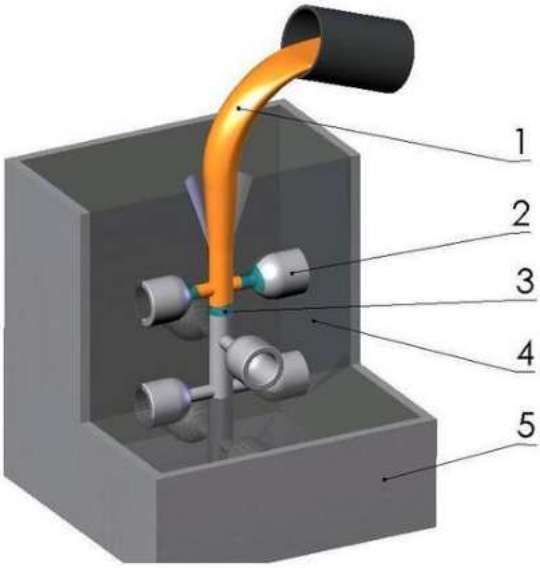

Process

- The wax pattern is prepared and surrounded/invested by the ceramic slurry that hardens it and converts it into a mold.

Atmiya University Rajkot

- The mold is preheated to evaporate the wax and the molten metal is poured from a ladle into the mold.
- The casting is allowed to solidify and then the mold is broken and the casting removed.

Example: Some examples of investment casting include turbine blades, airplane parts, firearm components and military equipment.

Shell Molding

Shell molding is a metal casting process that uses a sand covered with resin to form the mold. This process is similar to sand casting process but has better dimensional accuracy, higher productivity rate, and lower labor requirements. Also, the Shell Molds are reusable and expandable.

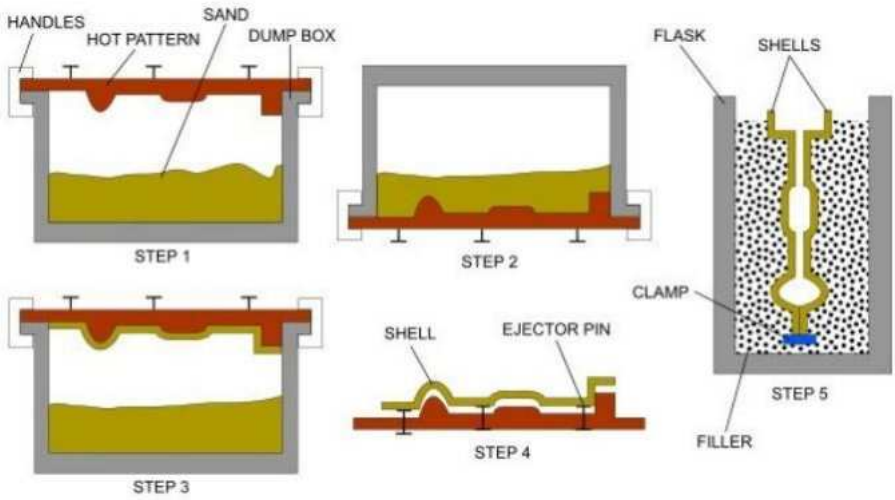

Process

- A two-piece metal pattern is created in the shape of the desired part using iron or steel.
- These patterns are clamped to a dump box containing the mixture of sand and a resin binder. This is known as shell preparation method.
- These shells are joined together and clamped to form the complete shell mold and the molten metal is poured from a ladle into the mold cavity.
- After the casting is solidified, the mold is broken and the casting removed.

Example: Shell molding is used for producing high precision parts. Some examples of shell molding include gear housings, cylinder heads, connecting rods, and lever arms.

Atmiya University Rajkot

2. Molding

Molding is a manufacturing process that uses a rigid frame to shape hot liquid or a ductile raw material. It is mostly used to manufacture plastic products. The different types of manufacturing processes under molding are: –

Injection Molding

Injection molding is a molding process used for producing parts by injecting molten material into a mold. It is the most commonly used molding process for manufacturing plastic parts. This process requires the use of an injection molding machine, raw plastic pellets, and a mold to get the desired output. The plastic is melted in the injection molding machine with the help of heaters and then a rotating/reciprocating screw injects it into the mold, where it cools and solidifies into the final part.

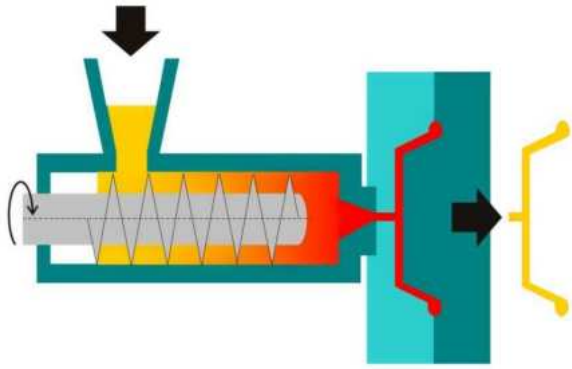

Example: Some examples of injection molding include automotive parts and components, game toys, chairs, tables, storage containers, housing for household appliances, consumer electronics, buckets.

Blow Molding

Blow molding is a molding process used to manufacture hollow plastic parts. This process starts with melting down the plastic and forming it into a parison. The parison is then clamped into a mold and air is blown into it. This air pushes the plastic out to match the mold. The plastic is allowed to cool and later the mold opened and the part is ejected. Although the blow molding process is costlier than injection molding, it is still used for manufacturing many plastic products.

Blow molding is divided into three types of manufacturing processes namely extrusion blow molding, injection blow molding, and injection stretch blow molding.

Atmiya University Rajkot

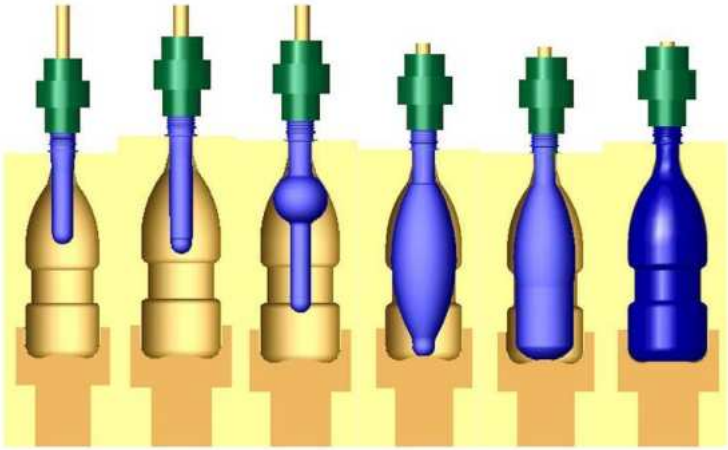

Example: Some examples of blow molding include automotive ducts, stadium seating chairs, containers, trays, reservoirs, tanks, coolers, fan housings, panels, doors, toys, sporting goods, watering cans and household products, carrying cases.

Extrusion Molding

Extrusion Molding is a process used to manufacture long tube-shaped products of a fixed cross-section. This process uses an extrusion machine to force the heated plastic through a die with an opening. The machine uses a reciprocating/rotating screw to feed the plastic into the die. The die then forces the material into the desired shape or the shape of the die. Heaters are used to melting the plastic in the extrusion machine. The material is allowed to cooled and then cut down into the required shape.

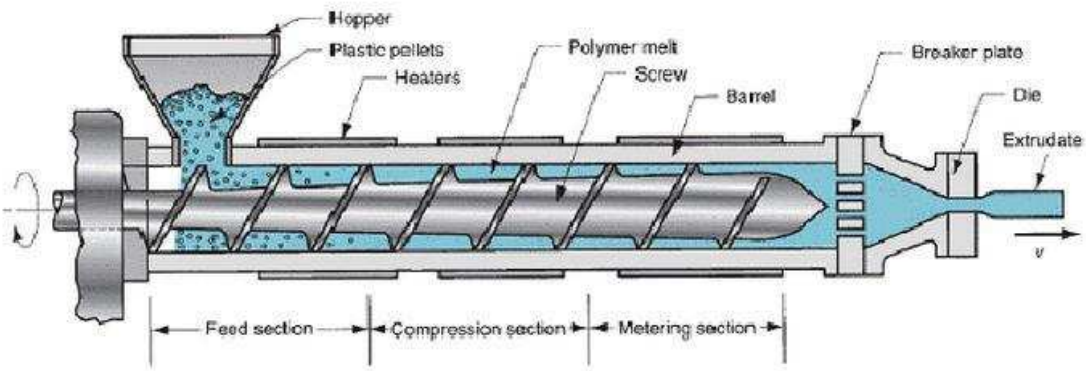

Example: Some examples of extrusion molding include pipe, tube, plastic films and sheeting, thermoplastic coatings, and wire insulation.

Rotational Molding

Rotational Molding is a molding process used for manufacturing hollow parts. This process is accomplished by placing resin into a hollow mold and then rotating that tool bi-axially in an oven. There is no pressure involved in this technique, unlike other plastic manufacturing processes. Thus, making the mold cost cheap and the process economical.

Atmiya University Rajkot

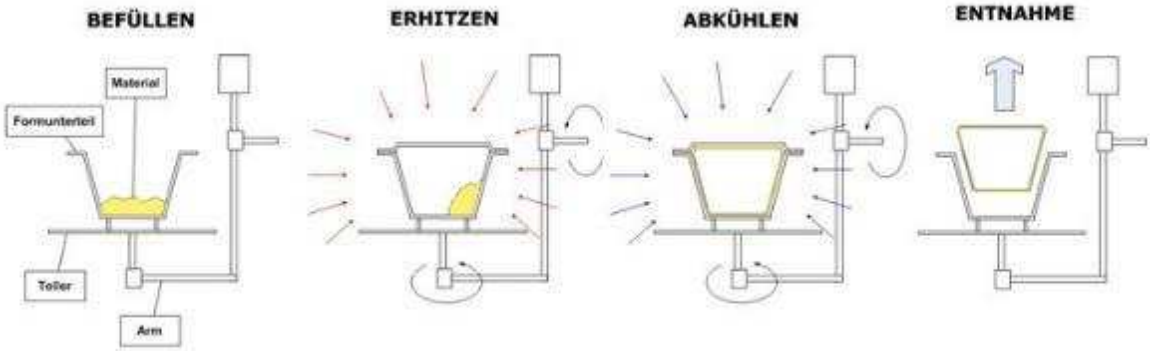

Process

- The mold is filled with a polymer resin and heated in an oven until the resin melts inside of the mold cavity.
- It is then slowly rotated to disperse and stick the soft material inside the mold cavity.
- A cool tool is used to solidify the part and later the part is removed from the mold.

Example: Some examples of rotational molding include water tanks, medical products, consumer's products, toys, leisure craft, sporting equipment.

Thermoforming

Thermoforming is a molding process where a plastic sheet is heated to an elastic forming temperature and formed into the desired shape. This method is often used for sample and prototype parts. It is divided into three types of manufacturing processes namely vacuum forming, pressure forming and mechanical forming.

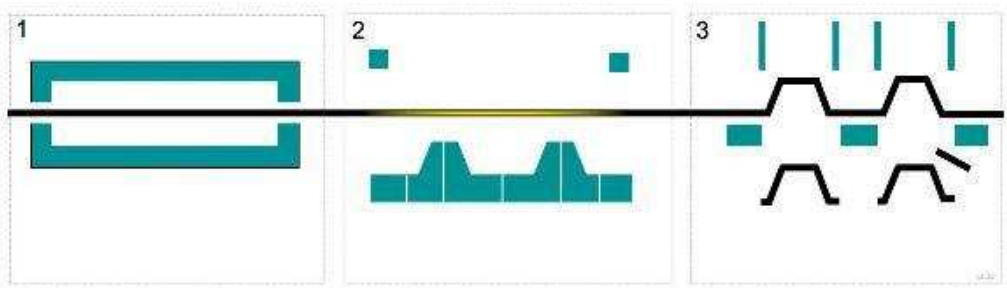

Process

- The thermoplastic sheet is heated using either convection or radiation until it gets soften.
- This soft sheet is then pressed against the mold using the vacuum or air pressure or mechanical force.
- The excess material is then trimmed away and the formed part is released.

Atmiya University Rajkot

Example: Some examples of thermoforming include switchgear, motor components, thrust washers, ash cups, valve covers, disc brake pistons, knobs, and handles.

Powder Metallurgy

Powder metallurgy is a molding process used for manufacturing precision metal components from metal powders. The rate of production of parts is quite high in powder metallurgy which makes it economical than the other casting processes.

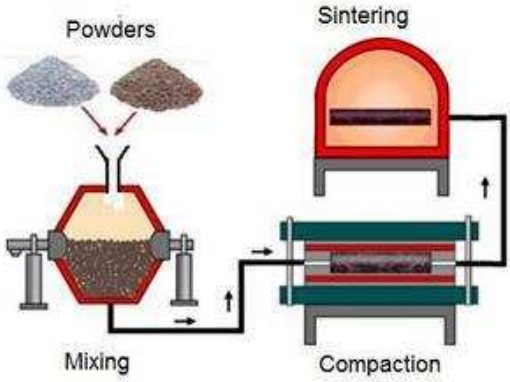

Process

- A homogeneous mixture of metal powders or alloy powders is prepared.
- The metal powder is then pressed into the desired shape at room temperature.
- At last, the product is heated that causes the powder particles to fuse together without melting.

Example: Some examples of powder metallurgy include self -lubricating bearings, porous metal filters, gears, cams, brackets, sprockets.

3. Forming

Forming is a manufacturing process that uses suitable stresses such as compression, tension or shear to deform the material and get the desired shape. This process involves deformation and displacement of material leading to no material removal or loss of material. The different types of manufacturing processes under forming are: –

Forging

Forging is a manufacturing process that uses compressive forces to shape the material. This process is accomplished with the help of a hammer, press or a special forging machine. The forged parts have good strength and toughness without the defects of porosity, inclusion or voids, also they can be used reliably for highly stressed and critical applications.

Forging may be carried out on materials in either hot or cold state and therefore, it is divided into types of manufacturing processes i.e. cold forging and hot forging.

Atmiya University Rajkot

Example: Some examples of forging include hammers, sleds, wrenches, garden tools, sockets, hardware, hand tools, edged weapons, cymbals, jewelry, rivets, bolts.

Bending

Bending is a manufacturing process used to deform metal into the desired shape by using a die and punch. This process is most commonly used for sheet metal products to get the required U-shape, V-shape or the channel shape. Commonly used bending machines are pan brakes, brake presses, and other specialized machine presses.

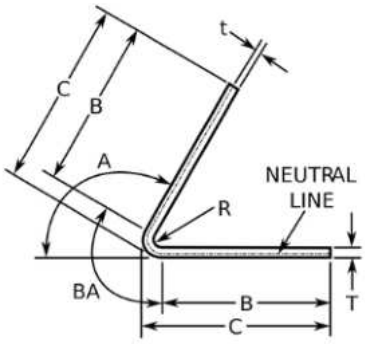

Process

- The material is placed on the die and positioned in place with the help of stops.
- The upper part of the press with appropriately shaped punch attached to it descends and forms the V-shaped bend.
- The U-punch forms the U-shape with a single punch.

Example: Some examples of bending operations include electric enclosures, electrical boxes, brackets, rectangular ductwork.

Stamping

Stamping or pressing is a manufacturing process in which thin walled metal parts are shaped desirably with the help of punches and dies. This process is accomplished by placing flat sheet metal into a stamping press where a tool and die surface forms the metal into the desired shape. Stamping uses hydraulic or mechanical press to perform the operations which can be done at a single die station or multiple die stations. Also, this process is usually carried out on sheet metal, but can also be used on other materials,

Atmiya University Rajkot

such as polystyrene.

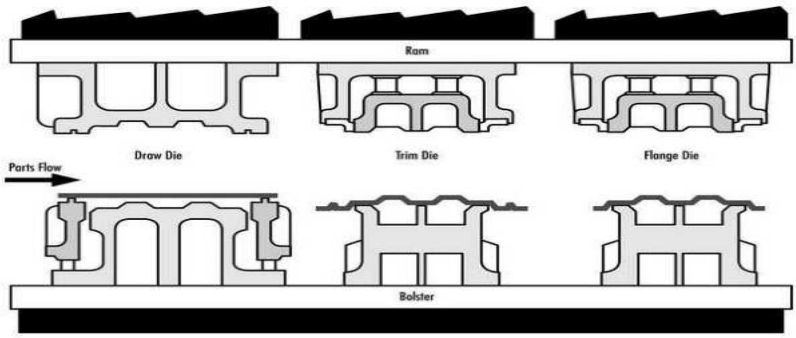

Example: Some examples of stamping include trunks, doors, panels, enclosures, fenders, roof, and hood outer parts.

Shearing

Shearing is a manufacturing process used to remove a blank of required shape and dimension from a large sheet of metal, paper or plastics. This process includes cutting of sheet without the formation of chips or the use of burning or melting. Shearing is divided into following types of manufacturing processes: –

- Blanking
- Piercing
- Roll slitting
- Trimming
- Coining

Process

- The punch applies pressure to the sheet forming cracks on both the top and bottom edges of the sheet.
- The punch goes down further to grow these cracks and eventually separate the slug from the material.

Example

Some examples of shearing include industrial machinery, automobile parts, electronic equipment, knives, scissors.

4. Machining

Machining is a manufacturing process used to cut a piece of raw material into the desired shape and size with the help of controlled material-removal process. These processes are based on a common theme known as subtractive manufacturing. The machining process is used for all the types of product especially metal products. The different types of manufacturing processes under machining are:-

Rajkot

1. MIlling – Milling is a process of removal of material from a workpiece using rotary cutters and getting the desired shape.
2. Turning -Turning is a process of removal of unwanted material from circular parts using a cutting tool. This process requires a lathe, workpiece, fixture, and a cutting tool.
3. Shaping – Shaping process uses a cutting tool that reciprocates against a stationary workpiece producing a plane or a desired surface.
4. Drilling – Drilling process uses a drill bit to make a hole of circular cross-section into the solid material.
5. Honing – Honing process produces a precision surface on a metal workpiece by scrubbing an abrasive stone against it.
6. Finishing – Finishing process is used to improve appearance, adhesion, wettability, wear resistance, hardness or to remove burrs and other surface flaws with the help of sanders.

5. Joining

Joining or assembling process are part of every production processes where two or more parts are combined together to get the required product. The main types of manufacturing processes under joining are:-

Atmiya University Rajkot

1. Welding – Welding process is used to heat and melt two or more parts and force them together making a single functional part. Arc welding, resistance welding, oxyfuel gas welding are few types of welding operations.
2. Soldering – Soldering process is also used to join two or more metal items by melting and putting a filler metal (solder) into the joint. It differs from welding as it does not involve melting of the workpieces.
3. Brazing – Brazing process is used to join two or more metal items together by melting and flowing a filler metal into the joint. Brazing uses higher temperatures for a similar process as compared to soldering. Also, it requires much more closely fitted parts than in soldering.
4. Adhesive Bonding – Adhesive bonding is used to hold multiple closely spaced parts together using a filler material called an adhesive. It is mainly used for a non-metallic substance such as a polymer.
5. Mechanical Assembly – It is a fastening process which uses nut, bolts, and rivets to join the parts together. It is also a reversible joining process.

6. Coating or Plating

This process is defined as a method of covering the part surface with powder or zinc or other chemicals to protect it from corrosion, wear and other defects. It is also done to improve the electrical conductivity or magnetic response of the material. The main types of manufacturing processes under the coating process are powder coating, electroplating, sputter deposition.

7. Additive Manufacturing

Atmiya University Rajkot

Additive manufacturing is the process reversible to subtractive manufacturing i.e. machining. It is a manufacturing process that builds 3D objects by adding layer-upon-

layer of material, whether the material is plastic, metal or concrete. Additive manufacturing comprises many technologies such as 3D printing, rapid prototyping, direct digital manufacturing, layered manufacturing and additive fabrication. This technology is growing at a very fast speed due to its high-efficiency and accuracy.

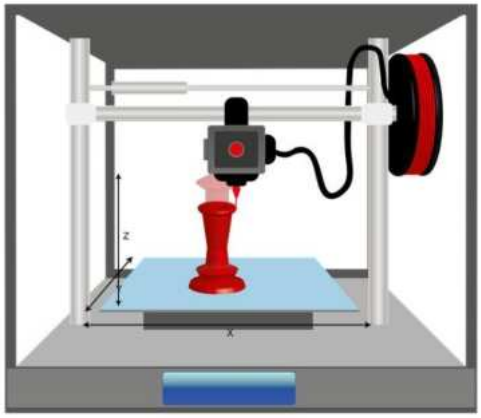

Example: Some examples of 3D printing include jewelry

Atmiya University Rajkot

Faculty of Engineering & Technology, Atmiya University, Rajkot

Department of Mechanical Engineering

Prepared by: Team of Mechanical Engineering Department

Course: Fundamentals of Mechanical Engineering

Module 4: Concept of Automation

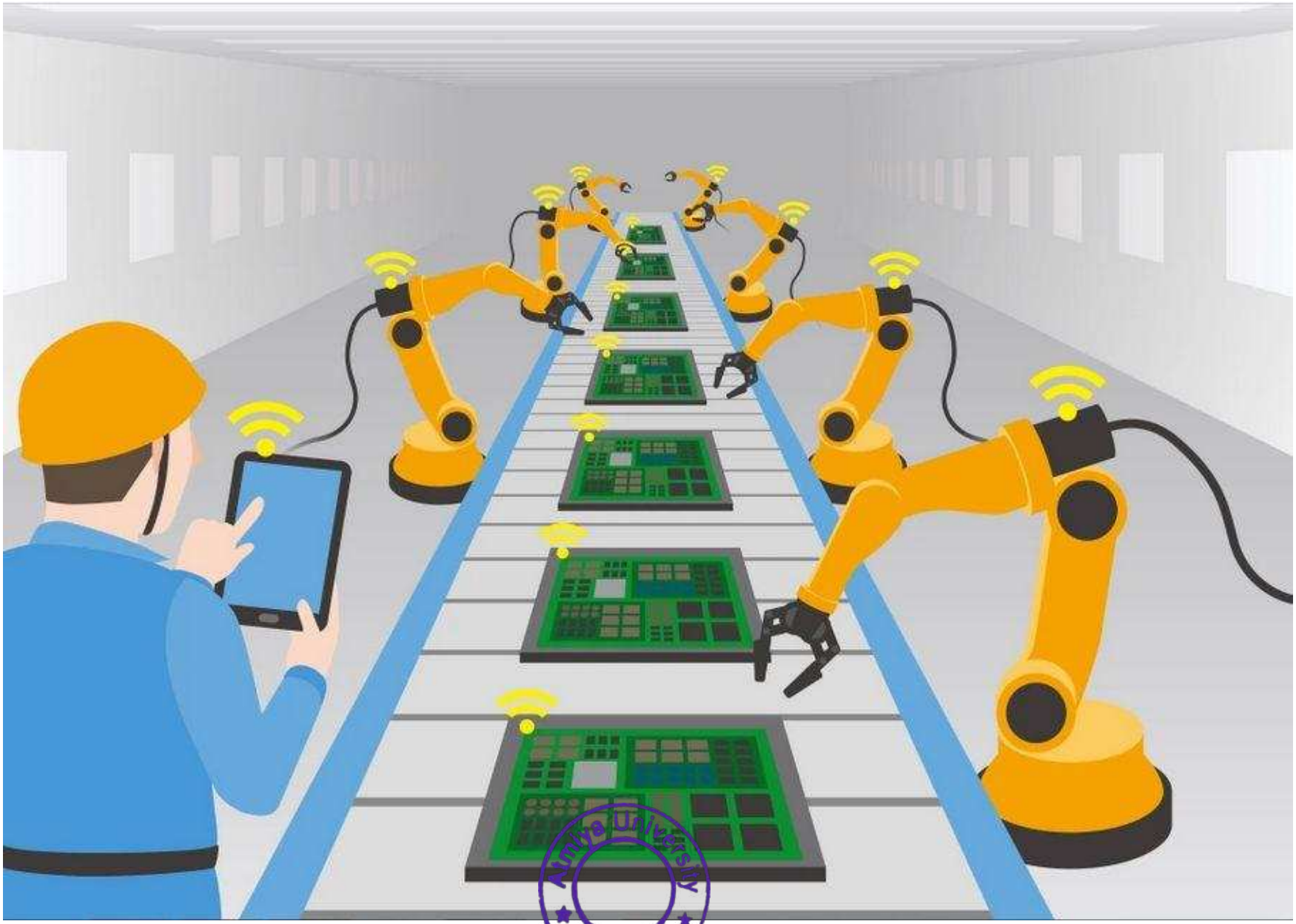

Atmiya University
Rajkot

Introduction to Automation

- **Definition: It is technology concerned with the application of Mechanical, electronic & computer-based systems to operate and control production in order to improves productions.**

Atmiya University Rajkot

It Includes,

- Automated machine tools.
- Automated assembly machines
- Industrial robots.
- Automated material handling & storages system
- Automated inspection system for quality control
- Feedback control & computer process control
- Computer integrated system for planning, data collection
- decision making.

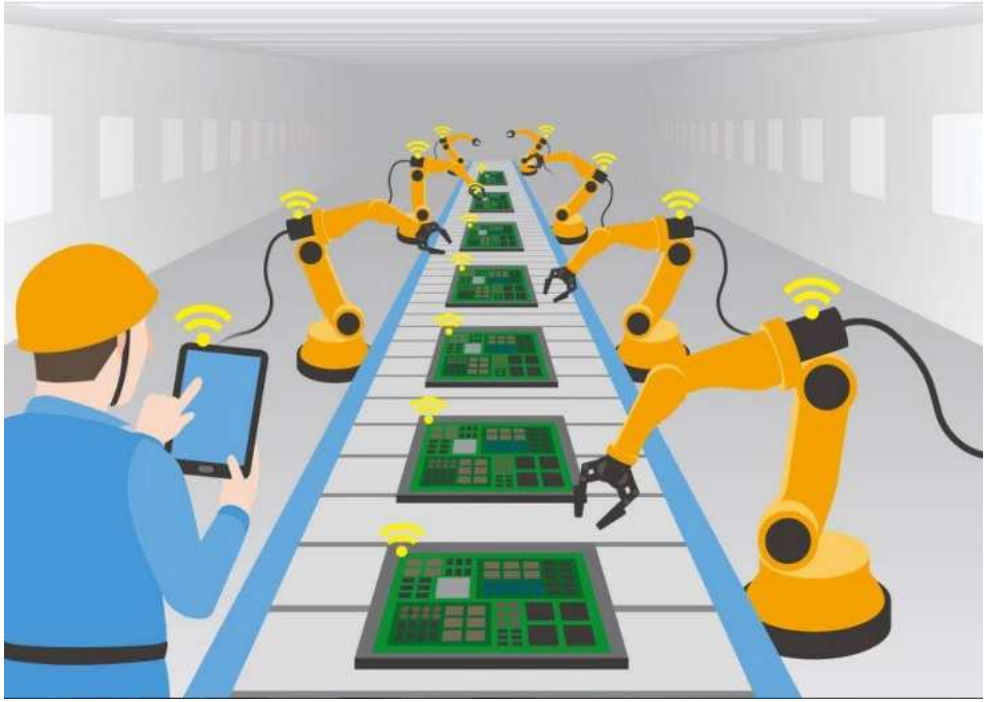

Atmiya University Rajkot

Need

- Earlier the purpose of automation was to increase productivity (since automated systems can work 24 hours a day) and to reduce the cost associated with human operators (i.e. wages & benefits).
- However, today, the focus of automation has shifted to increasing quality and flexibility in the manufacturing process. In the automobile industry, the installation of pistons into the engine used to be performed manually with an error rate of 1-1.5%.
- Presently, this task is performed using automated machinery with an error rate of 0.00001%.

Atmiya University Rajkot

- Industrial automation is the use of control systems, such as computers or robots, and information technologies for handling different processes and machineries in an industry to replace a human being. It is the second step beyond mechanization in the scope of industrialization.
- Industrial Automation and its future scope have led us to a revolutionary phenomenon which is Industry 4.0. Moreover, automation in the manufacturing process has been greatly advanced to be autonomous.
- The future scope of Industrial Automation also aims to eliminate the redundant and hazardous job roles by outsourcing the same to a machine. Hence, this enhances the quality of work by not only reducing errors but also improving productivity and mitigating costs.

Atmiya University Rajkot

Advantages & Limitations of Industrial Automation

- Lower operating cost:
- Industrial automation eliminates healthcare costs and paid leave and holidays associated with a human operator. Further, industrial automation does not require other employee benefits such as bonuses, pension coverage, etc. Above all, although it is associated with a high initial cost it saves the monthly wages of the workers which leads to substantial cost savings for the company. The maintenance cost associated with machinery used for industrial automation is less because it does not often fail. If it fails, only computer and maintenance engineers are required to repair it.
- High Productivity

Atmiya University Rajkot

- High Productivity
- Although many companies hire hundreds of production workers for up to three shifts to run the plant for the maximum number of hours, the plant still needs to be closed for maintenance and holidays. Industrial automation fulfills the aim of the company by allowing the company to run a manufacturing plant for 24 hours a day 7 days a week and 365 days a year. This leads to a significant improvement in the productivity of the company.
- High Quality

Atmiya University Rajkot

- Automation alleviates the error associated with a human being. Further, unlike human beings, robots do not involve any fatigue, which results in products with uniform quality manufactured at different times.
- High Flexibility
- Adding a new task in the assembly line requires training with a human operator, however, robots can be programmed to do any task. This makes the manufacturing process more flexible.
- High Information Accuracy
- Adding automated data collection can allow you to collect key production information, improve data accuracy, and reduce your data collection costs. This provides you with the facts to make the right decisions when it comes to reducing waste and improving your processes.
- High Safety
- Industrial automation can make the production line safe for employees by deploying robots to handle hazardous conditions

Atmiya University Rajkot

Limitations of Industrial Automation

- High Initial Cost
- The initial investment associated with making the switch from a human production line to an automatic production line is very high. Also, substantial costs are involved in training employees to handle this new sophisticated equipment.

Atmiya University Rajkot

Types of Automation

Automated production systems are classified into three basic types:

1) Fixed Automation

2) Programmable Automation

3) Flexible Automation

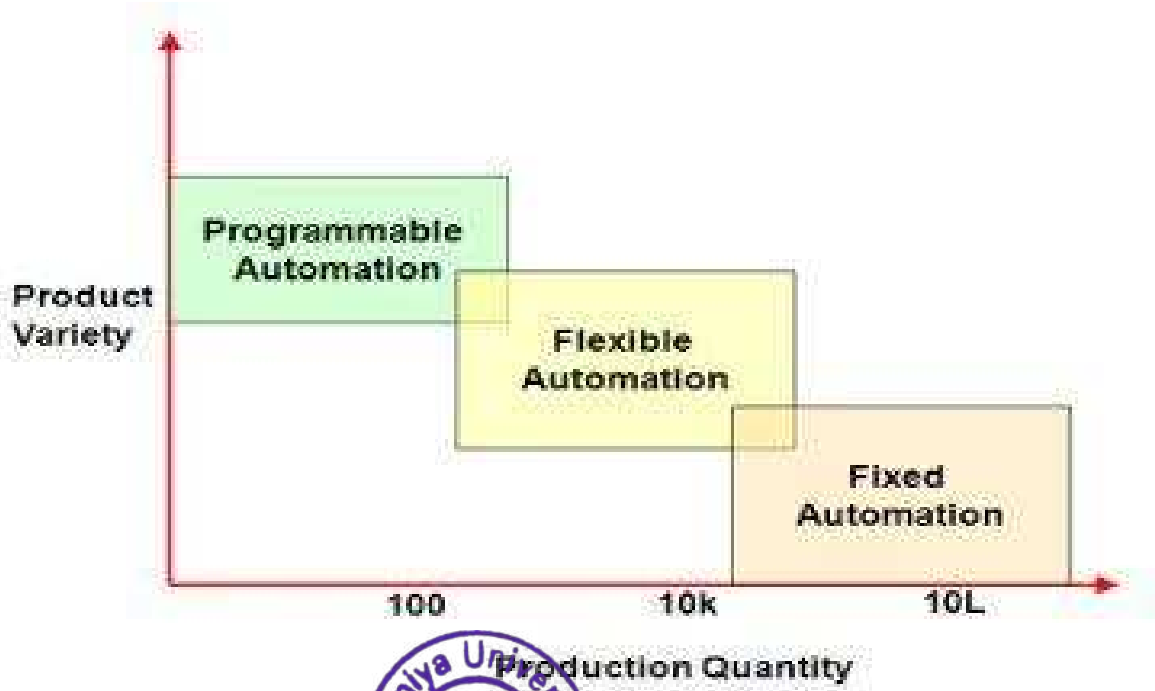

Atmiya University Rajkot

Fixed Automation

- Fixed automation is a system in which the sequence of processing (or assembly) operations is fixed by the equipment configuration.
- The operations in the sequence are usually simple.
- It is the integration and coordination of many such operations into one piece of equipment that makes the system complex.
- The typical features of fixed automation are:

  High initial investment for custom-engineered equipment

  High production rates

  Relatively inflexible in accommodating product changes

Atmiya University Rajkot

Programmable Automation

- In programmable automation, the production equipment is designed with the capability to change the sequence of operations to accommodate different product configurations.
- The operation sequence is controlled by a program, which is a set of instructions coded so that the system can read and interpret them.
- New programs can be prepared and entered into the equipment to produce new products.
- The typical features of programmable automation are:

  High investment in general-purpose equipment

  Low production rates relative to fixed automation

  Flexibility to deal with changes in product configuration

  Most suitable for batch production

Atmiya University Rajkot

Flexible Automation

- The concept of flexible automation has developed only over the last 15 to 20 years, and the principles are still evolving.
- A flexible automated system is one that is capable of producing a variety of products (or parts) with virtually no time loss for changeovers from one product to the next.
- There is no production time loss while reprogramming the system and altering the physical setup (tooling, fixtures and machine settings).
- The system can produce various combinations and schedules of products, instead of requiring that they be made in separate batches.
- The features of flexible automation can be summarized as follows:

  High investment for a custom-engineered system

  Continuous production of variable mixtures of products

  Medium production rates

  Flexibility to deal with product design variations

Atmiya University Rajkot

Reasons for Automation

- Increased productivity due competition
- High cost of Labour
- Labour shortage
- Trend of Labour toward the sector
- Safety
- High cost of raw materials
- Improved Product Quality
- Reduced manufacturing Lead time

Atmiya University Rajkot

Introduction to Mechatronics

- Mechatronics is a concept of Japanese origin (1970's).
- The term Mechatronics coined by "Tetsuro Mori".
- **Mechatronics is defined as the application of electronics and computer technology to control the motions of mechanical systems.**
- It is a multidisciplinary approach to product and manufacturing system design.
- It involves application of electrical, mechanical, control and computer engineering to develop products, processes and systems with greater flexibility, ease in redesign and ability of reprogramming.

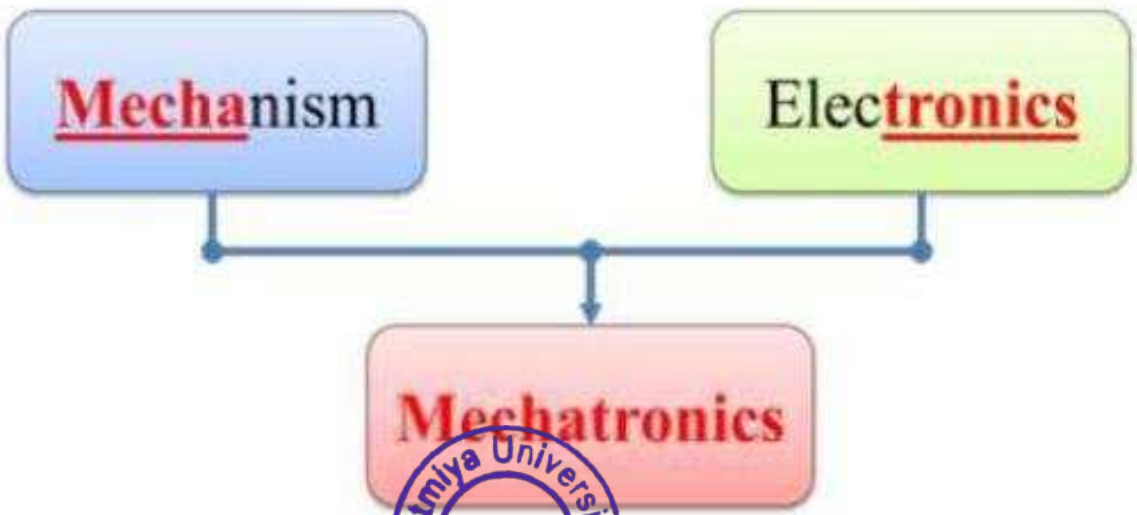

Atmiya University Rajkot

Role of various disciplines in Mechatronics

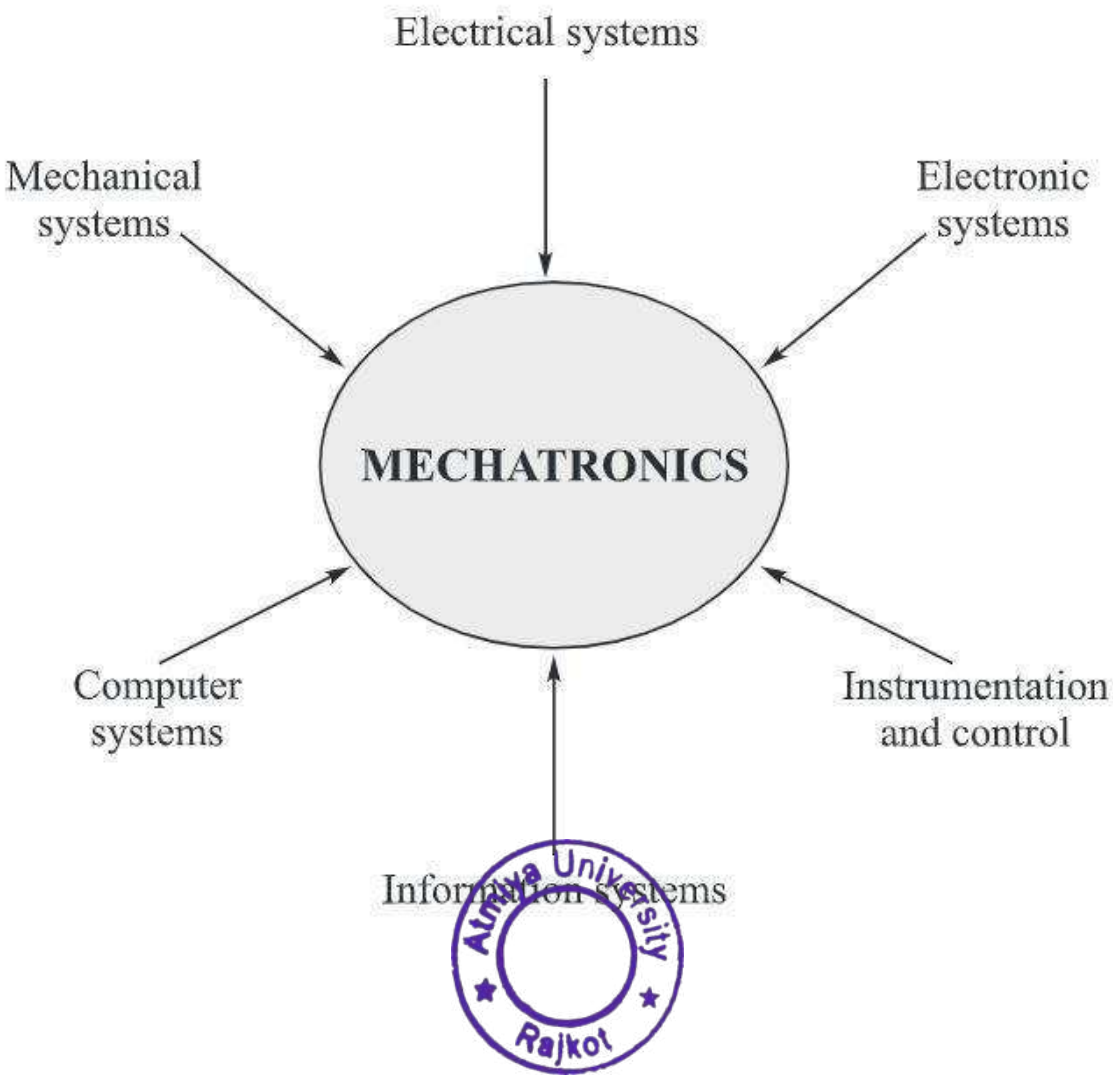

Atmiya University Rajkot

Advantages & Disadvantages

Advantages	Disadvantages
Cost effective and reliable product	High initial cost of the system.
High degree of flexibility and productivity	Imperative to have knowledge of different engineering fields for design and implementation.
Greater extent of machine utilisation.	Specific problems for various systems will have to be addressed separately and properly.
Reduction in the capital expense due to integration of complex systems.	Expensive to incorporate mechatronics approach to an existing/old system

Atmiya University Rajkot

Atmiya University
Rajkot

Introduction to Industry 4.0

- Industry 4.0 define as the “digitization of the manufacturing sector, with embedded sensors in virtually all product components and manufacturing equipment, commonly use cyber physical systems and analysis of all relevant data.”

- Industry 4.0 is commonly referred to as the 4th Industrial revolution. Industry 4.0 creates what has been called a "smart factory".
- Industry 4.0 refers to a new phase in the Industrial Revolution that focuses heavily on interconnectivity, automation, machine learning, and real-time data.

- The term Industry 4.0 was first publicly introduced in 2011 as “Industrie 4.0” by a group of representatives from different fields (such as business, politics, and academia) under an initiative to enhance the German competitiveness in the manufacturing industry.

- The term "Industry 4.0" originates from a project in the high-tech strategy of the German government. The term "Industry 4.0" was revived in 2011 at the Hannover Fair. In October 2012 the Working Group on Industry 4.0 presented a set of Industry 4.0 implementation recommendations to the German federal government. On 8th April 2013 at the Hannover Fair, the final report of the Industry 4.0 was presented.

- The German federal government adopted the idea in its High-Tech Strategy for 2020. Subsequently, a Working Group was formed to further advise on the implementation of Industry 4.0.

- Industry 4.0 is a name for the current trend of automation and data exchange in manufacturing technologies. It includes cyber physical systems, the Internet of Things (IoT), Cloud computing etc.

Aaliya University Rajkot

Evolution of Industry from 1.0 to 4.0

There are four distinct industrial revolutions that the world either has experienced or continues to experience today.

The First Industrial Revolution

The first industrial revolution happened between the late 1700s and early 1800s. During this period of time, manufacturing evolved from focusing on manual labor performed by people and aided by work animals to a more optimized form of labor performed by people through the use of water and steam-powered engines and other types of machine tools.

The Second Industrial Revolution

In the early part of the 20th century, the world entered a second industrial revolution with the introduction of steel and use of electricity in factories.
The introduction of electricity enabled manufacturers to increase efficiency and helped make factory machinery more mobile.
It was during this phase that mass production concepts like the assembly line were introduced as a way to boost productivity.

Atmiya University Rajkot

Evolution of Industry from 1.0 to 4.0

The Third Industrial Revolution

Starting in the late 1950s, a third industrial revolution slowly began to emerge, as manufacturers began incorporating more electronic—and eventually computer—technology into their factories.
During this period, manufacturers began experiencing a shift that put less emphasis on analog and mechanical technology and more on digital technology and automation software.

The Fourth Industrial Revolution or Industry 4.0

In the past few decades, a fourth industrial revolution has emerged, known as Industry 4.0.
Industry 4.0 takes the emphasis on digital technology from recent decades to a whole new level with the help of interconnectivity through the Internet of Things (IoT), access to real-time data, and the introduction of cyber-physical systems.
Industry 4.0 offers a more comprehensive, interlinked, and holistic approach to manufacturing.
It connects physical with digital, and allows for better collaboration and access across departments, partners, vendors, product, and people.
Industry 4.0 empowers business owners to better control and understand every aspect of their operation, and allows them to leverage instant data to boost productivity, improve processes, and drive growth.

Atmiya University Rajkot

Evolution of Industry from 1.0 to 4.0

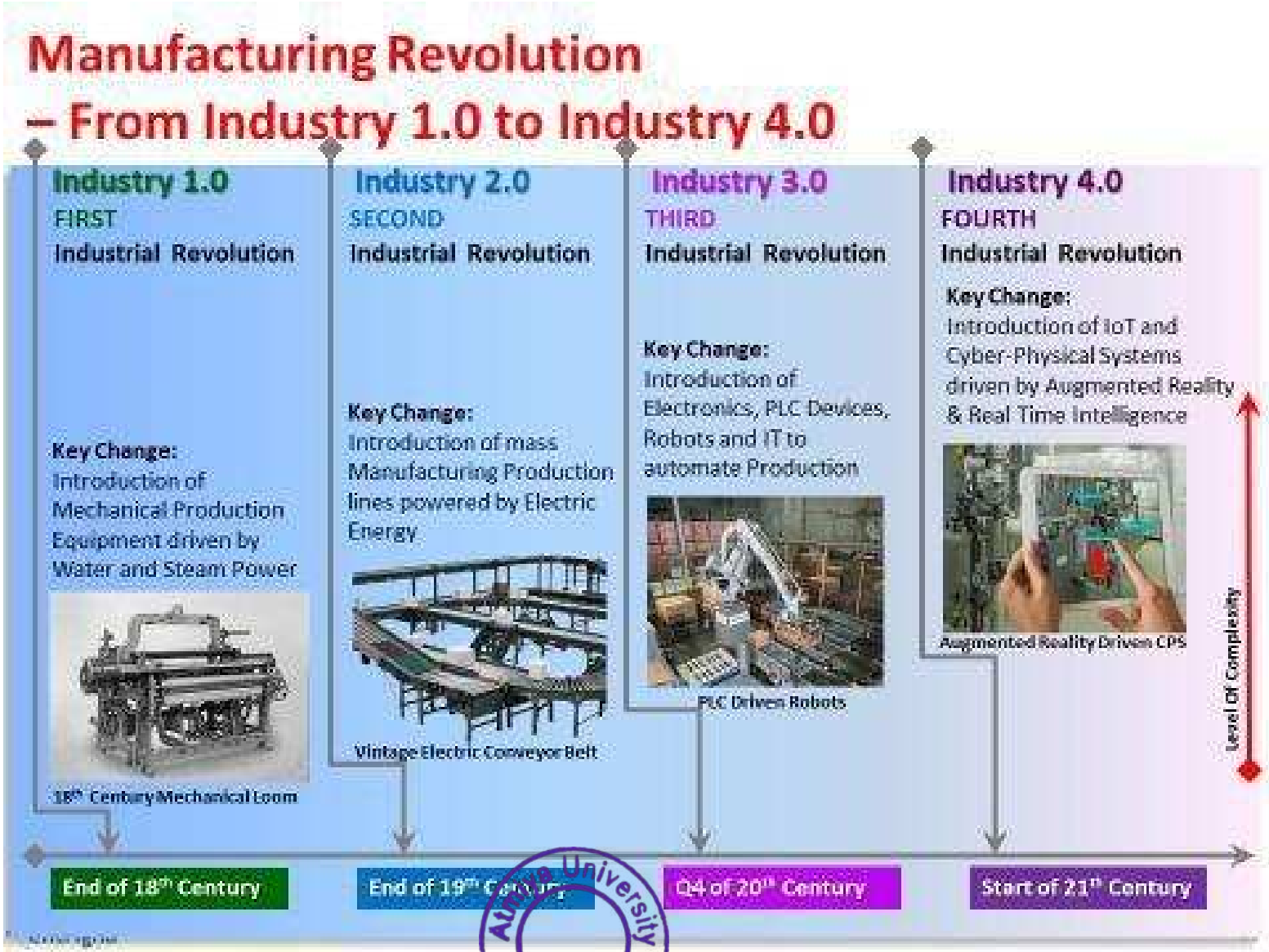

Atmiya University Rajkot

Evolution of Industry from 1.0 to 4.0

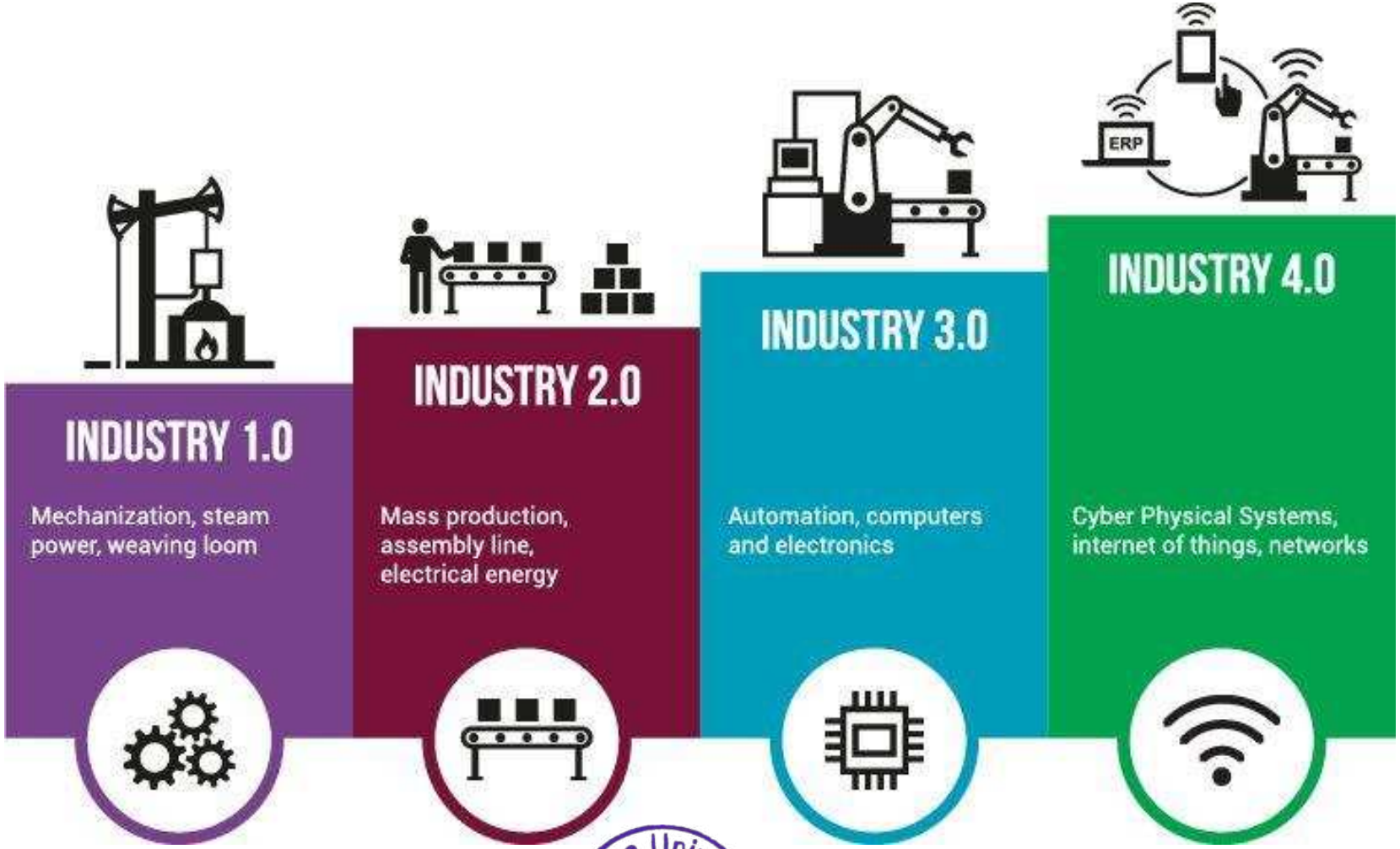

Atmiya University Rajkot

Evolution of Industry from 1.0 to 4.0

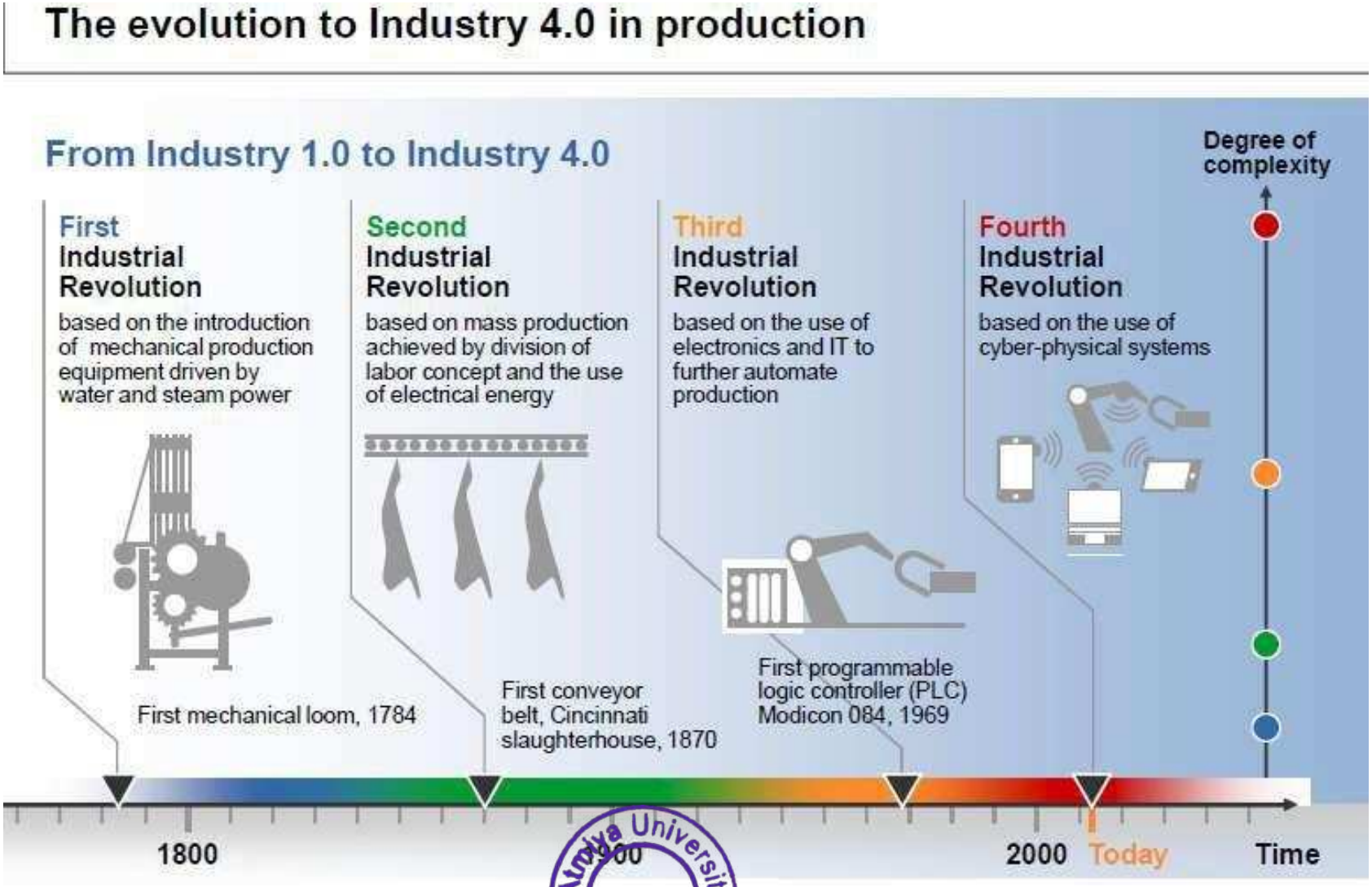

Atmiya University Rajkot

Atmiya University Rajkot

Global Industry Trends

After the manufacturing industry went through automation, mass production, and globalization, German (Industry 4.0), U.S.A. (AMP), Japan (4.1J), China (Made in China 2025), and other major countries are actively building agile and predictable cyber-physical systems for smart manufacturing, production, and marketing to address the market demand.

2011	2012	2013	2014	2015
U.S.A. AMP	Germany Industry 4.0	Japan Industry 4.1J	Korea Manufacturing Innovation 3.0	China Made in China 2025
Future manufacturing focus: 3D printing, big data, manufacturing systems, and intelligent robots.	Integrate ICT hardware and software for Cyber-Physical System (CPS).	Industry revitalization through equipment investment and R&D.	Assist SMEs to set up intelligent and optimized manufacturing processes.	Upgrade manufacturing industry, aiming to become a "world manufacturing power" by 2025

-AMP (Advanced Manufacturing Partnership)
-4.1J (Japan Industry 4.1J)

Atmiya University Rajkot

Atmiya University
Rajkot

Benefits of Industry 4.0 in the Manufacturing Industry

- Improved Productivity
- Improved Efficiency
- Increased Knowledge Sharing and Collaborative Working
- Flexibility and Agility
- Makes Compliance Easier
- Better Customer Experience
- Reduces Costs
- Creates Innovation Opportunities
- Higher Revenues
- Increased Profitability
- Getting a Return on Investment

Atmiya University Rajkot

Augmented Reality & Virtual Reality

❖ Augmented Reality:-

- Augmented Reality based systems are storming the technology industry.
- Few years ago they found their applications only in flight simulators.
- Today remote repair instructions can be sent to literally any part of the earth with internet accessibility.
- It helps technicians to enhance their skills by practicing high end repairs and maintenance over and over again using augmented reality.
- Consider for example, we have an equipment worth of some million dollars needs some form of maintenance.
- Before carrying out the job on the actual equipment, a training session can be conducted.
- Once the technician is confident enough to be impeccable, he can do the same with the actual equipment. It is a win-win situation.
- We don't lose our equipment; Technician does not get embarrassed messing up the job.

Atmiya University Rajkot

- Augmented reality bridges the gap between the digital and physical worlds by superimposing virtual images or data onto a physical object.
- For this, the technology uses AR-capable devices, such as smartphones, tablets and smart glasses.
- In the context of manufacturing, AR could enable workers to speed up the assembly process and improve decision-making.
- For example, AR glasses could be used to project data, such as layouts, assembly guidelines, sites of possible malfunction, or a serial number of components, on the real part, facilitating faster and easier work procedures.

Atmiya University Rajkot

Atmiya University
Rajkot

Virtual Reality (VR)

- A computer technology that replicates the environment, real or imagined, and simulates a user's physical presence and environment to allow for user interactions.
- Virtual reality (VR) is an artificial, computer-generated simulation or recreation of a real life environment or situation.
- Presence is the key to defining VR in terms of experience.
- Presence is defined as sense of being in an environment.
- Telepresence is defined as the experience of presence in an environment by means of a communication medium.

Atmiya University Rajkot

Types of VR

Atmiya University
Rajkot

Augmented Reality

- Visualization technology allowing a user to see virtual information.
- System augments the real world scene.
- User maintains a sense of presence in real world.

virtual Reality

- A computer generated, interactive, three-dimensional environment.
- Totally immersive environment.
- Visual senses are under control of system.

Atmiya University Rajkot

Cloud Computing

- Cloud is a remote system that can be accessed provided from anywhere using the internet.
- There are a lot of cloud services available today of which notable are IaaS, PaaS, SaaS.
- Communication among machines themselves and between machines and humans are hugely backed by cloud services.
- Amazon.com Inc. is the best example. A consumer gets updated about the whereabouts of his order in real time. This is not a one-to-one message. Once your package has arrived at the warehouse, information is updated in cloud which is then notified to you. Every time you check for your package's present location, get query is executed in real time to let you know about your package.

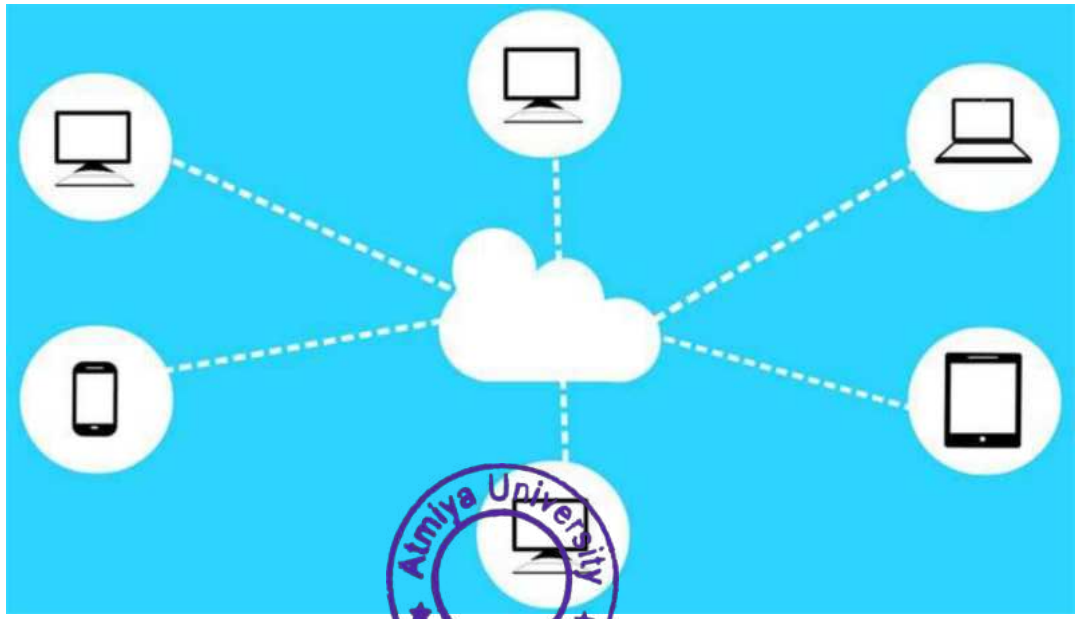

Atmiya University Rajkot

Big Data and Analytics

- As systems become increasingly digitized and connected, there is a great deal of data that can be collected and analyzed.
- One of the challenges is the quantity of data. Too much data makes it difficult to identify the relevant information and trends that can lead to intelligent and automated decisions.
- This is where “big” data and analytics come in.
- Big data and analytics make it possible to identify the performance of an individual component and its operating restrictions in order to prevent future production issues and take preventative action.

Atmiya University
Rajkot

Internet of Things (IoT)

- The **Internet of things** (**IoT**) describes the network of physical objects—"things"—that are embedded with sensors, software, and other technologies for the purpose of connecting and exchanging data with other devices and systems over the Internet.
- This embedded computing enhances the value and functionality of the product being manufactured.

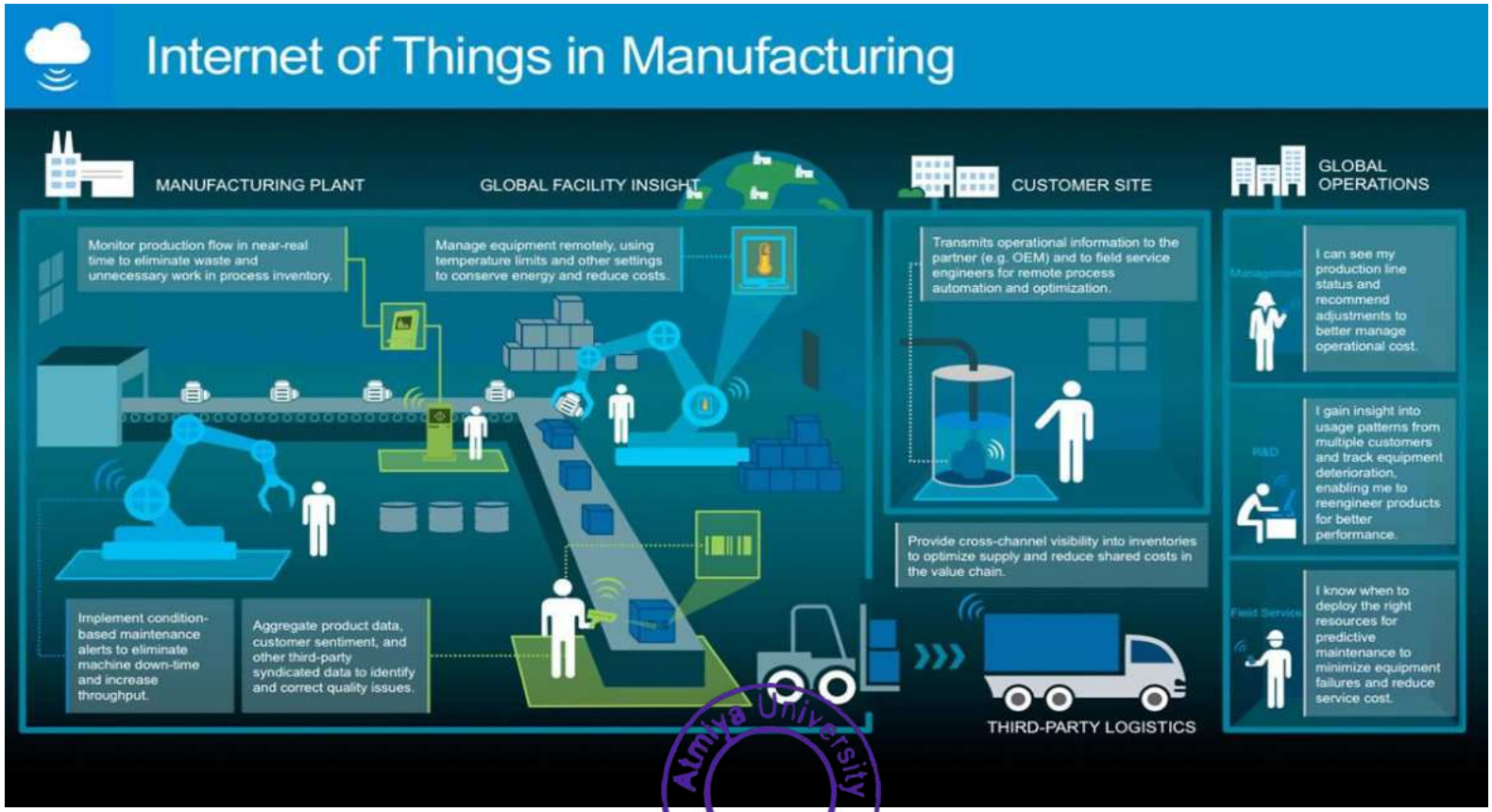

Atmiya University Rajkot

Industrial Internet of Things (IIoT)

- The Internet of Things refers to the networking and connectivity of smart devices.
- When you think of IoT, devices such as smartphones, tablets, and laptops are usually top of mind.
- In the world of manufacturing, this technology is often referred to as the Industrial Internet of Things (IIoT).
- Manufacturers are attaching sensors to machines and other physical assets on the plant floor to collect data which influences decisions real time and leads to increased efficiency and productivity.

Atmiya University Rajkot

Cyber Security

- As more and more components get connected and one device's action is based on the output of another device, more operational decisions are decentralized, more security concerns are raised.
- The cyber threats are increased manifold with increased connectivity and communications.
- There will be a great need to protect the data, industrial system, and manufacturing lines.
- Industry 4.0 is not possible without connections which are secure, vigilant, and resilient. Protection of computer systems from piracy is very important.

Atmiya University Rajkot

Industry 4. 0 Challenges

- **Capital:** This kind of transformations will require massive investment in new technologies like AI, IoT, or Robotics, which is not cheap. The decision to make such transformations will have to be taken at the C-level. Despite, the risks must be calculated and taken seriously. To add, such developments will require huge capital which eliminates small businesses and might cost the company their market share in the future.

- **Security:** The most challenging aspect of implementing industry 4.0 framework or techniques is the IT security risk. The online integration might create data leaks. Cyber theft should also be considered since, in this case, the problem is not individual, but could, and probably will cost the manufacturers the money, and it even might damage their reputation. Therefore, adequate research on 'security' is crucial.

- **Privacy:** Data privacy is not only the customer's concern but also the manufacturer's. In the interconnected industry, manufacturers should gather and analyse the data. Bridging the gap between the producer and consumer will be a big challenge for both the parties.

Atmiya University Rajkot

Computer Integrated Manufacturing (CIM)

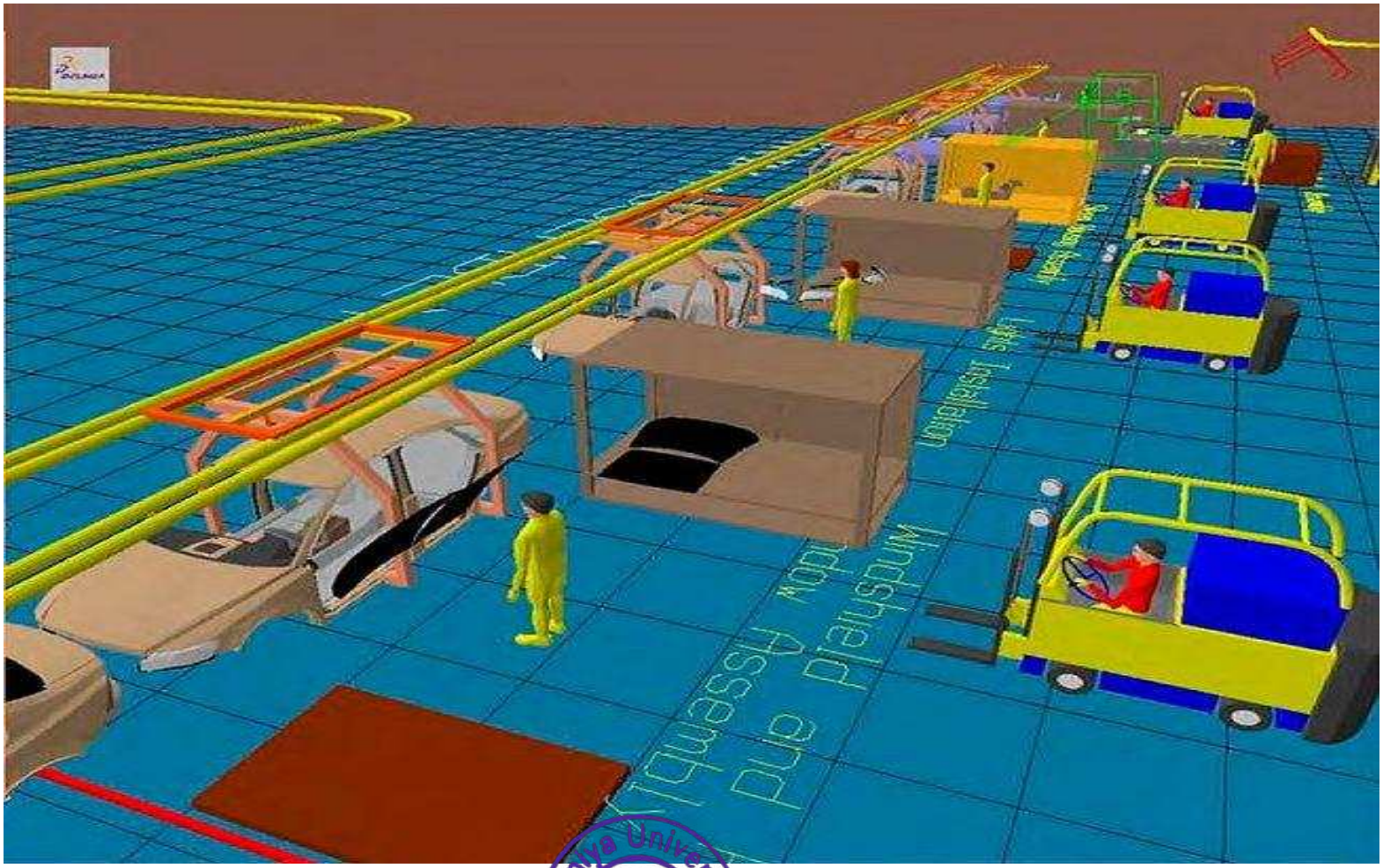

Atmiya University
Rajkot

CIM

- Method of Manufacturing and the name of a computer-automated system .
- It is the manufacturing approach of using computers to control the entire production process.
- The complete automation of a manufacturing plant, with all processes functioning under computer control and digital information tying them together.

❖ **CIM Objectives**

- Simplify production processes and product designs.
- Automates production processes with computers, machines, and robots
- Integrate all production and support processes using computer networks and other information technologies
- The primary objectives of CIM are to improve service to customers, increase flexibility, boost productivity and sustain profitable operations.

Atmiya University Rajkot

Benefits

- Improved customer service
- Improved quality
- Shorter time to market with new products
- Shorter flow time
- Greater flexibility and responsiveness
- Improved competitiveness
- Lower total cost
- Shorter customer lead time
- Increase in manufacturing productivity

Atmiya University Rajkot

Subsystems in CIM operation

❖ Computer-Aided Design(CAD)

- Use of computer technology for the process of design and design-documentation.

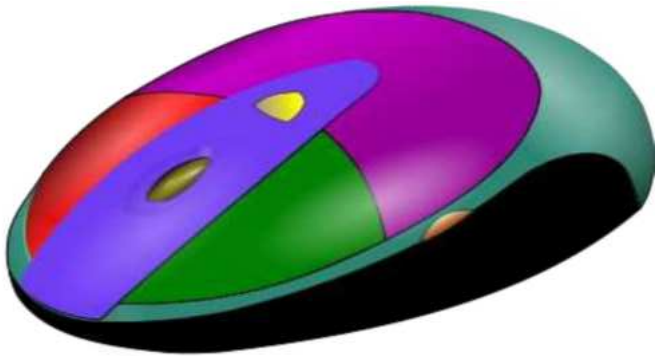

CAD model of a computer mouse

Atmiya University Rajkot

Subsystems in CIM operation

❖ Computer-Aided Manufacturing (CAM)

- Use of computer software to control machine tools and related machinery in the manufacturing of work pieces. **OR** Computer Aided Manufacturing (CAM) is the use of software and computer-controlled machinery to automate a manufacturing process.

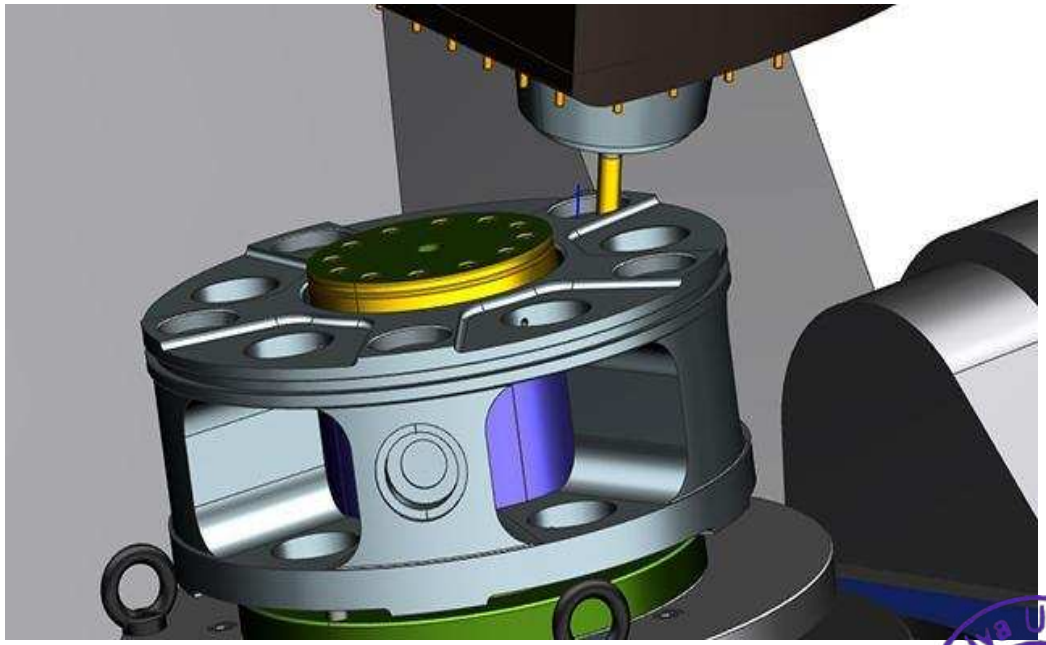

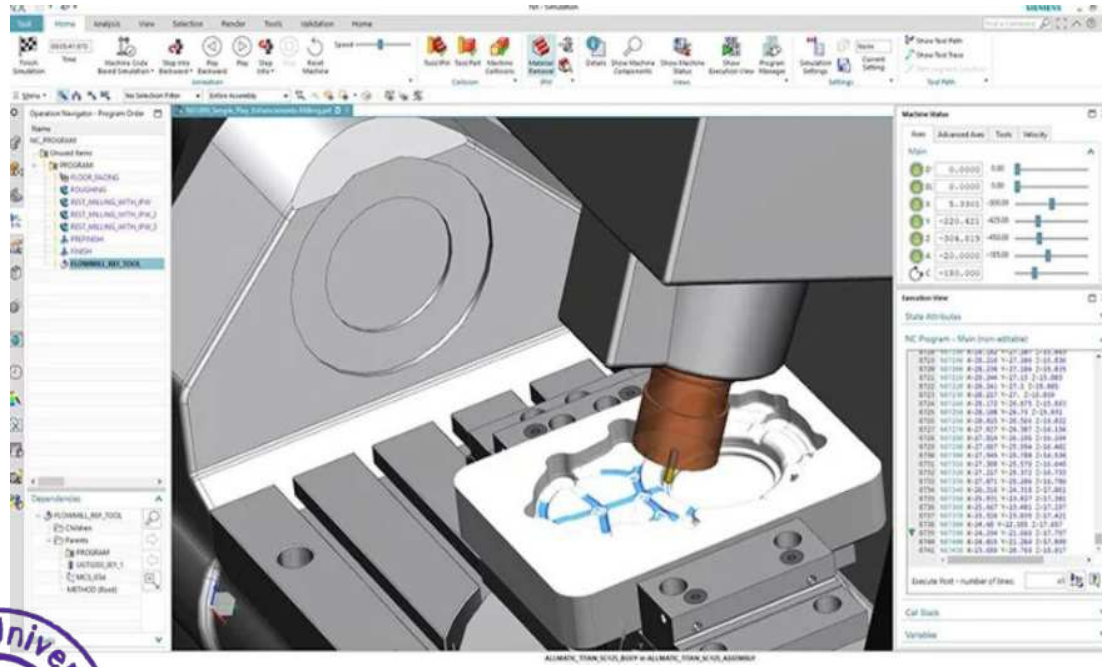

Atmiya University Rajkot

Key Issues

- Equipment incompatibility and difficulty of integration of protocols.
- Integrating different brand equipment controllers with robots, conveyors and supervisory controllers is a time-consuming task with a lot of pitfalls.
- Large investment and time required for software, hardware, communications, and integration cannot be financially justified easily.

Atmiya University Rajkot

7. Autonomous Robots

- Autonomous robots transfer raw materials, half-finished and completed goods in an easier, faster and smarter way.
- They operate based on a complex logic algorithm, meaning they don't require any preset path to carry out their duties.
- *Tesla Motors' Gigafactory* is an example. They house Autonomous Indoor vehicles (AIVs) to transfer materials between workstations. The vehicles can carry payloads up to 130 lbs., and can even charge their own battery without intervention. They have line follower robots too which move in a defined path. So the line-follower robot you made for your project has applications after all.

Atmiya University Rajkot

Atmiya University
Rajkot

Comparison of today's factory and an Industry 4.0 factory.

- Cyber-Physical Systems (CPS) can be further developed for managing Big Data and leveraging the interconnectivity of machines to reach the goal of intelligent, resilient and self-adaptable machines.
- Furthermore by integrating CPS with production, logistics and services in the current industrial practices, it would transform today's factories into an Industry 4.0 factory with significant economic potential.
- One of the report said that German gross value can be boosted by a cumulative 267 billion euros by 2025 after introducing Industry 4.0.

	Data source	Today's factory		Industry 4.0	
		Attributes	Technologies	Attributes	Technologies
Component	Sensor	Precision	Smart sensors and fault detection	Self-aware Self-predict	Degradation monitoring & remaining useful life prediction
Machine	Controller	Producibility & performance	Condition-based monitoring & diagnostics	Self-aware Self-predict Self-compare	Up time with predictive health monitoring
Production system	Networked system	Productivity & OEE	Lean operations: work and waste reduction	Self-configure Self-maintain Self-organize	Worry-free productivity

Atmiya University Rajkot

CONCEPT OF QUALITY CONTROL

&

SAFETY IN INDUSTRY

Hardik N. Chauhan

Assistant Professor

Department of Mechanical Engineering

Faculty of Engineering & Technology

Atmiya University

hardik.chauhan@atmiyauni.ac.in

2022-2023

What is Quality?

Quality is meeting the requirement, expectation, and needs of the customer is free from the defects, lacks and substantial variants. There are standards needs to follow to satisfy the customer requirements.

What is Assurance?

Assurance is provided by organization management, it means giving a positive declaration on a product which obtains confidence for the outcome. It gives a security that the product will work without any glitches as per the expectations or requests.

What is Quality Assurance?

Quality Assurance is known as QA and focuses on preventing defect. Quality Assurance ensures that the approaches, techniques, methods and processes are designed for the projects are implemented correctly.

Quality assurance activities monitor and verify that the processes used to manage and create the deliverables have been followed and are operative.

Quality Assurance is a proactive process and is Prevention in nature. It recognizes flaws in the process. Quality Assurance has to complete before Quality Control.

What is Control?

Control is to test or verify ctual results by comparing it with the defined standards.

What is Quality Control?

Quality Control is known as QC and focuses on identifying a defect. QC ensures that the approaches, techniques, methods and processes are designed in the project are following correctly. QC activities monitor and verify that the project deliverables meet the defined quality standards.

Quality Control is a reactive process and is detection in nature. It recognizes the defects. Quality Control has to complete after Quality Assurance.

What is The Difference in QA/QC?

Many people think QA and QC are the same and interchangeable but this is not true. Both are tightly linked and sometimes it is very difficult to identify the differences. Fact is both are related to each other but they are different in origins. QA and QC both are part of Quality Management however QA is focusing on preventing defect while QC is focusing on identifying the defect.

Atmiya University Rajkot

Quality Assurance	Quality Control
It is a process which deliberates on providing assurance that quality request will be achieved.	QC is a process which deliberates on fulfilling the quality request.
A QA aim is to prevent the defect.	A QC aim is to identify and improve the defects.
QA is the technique of managing quality.	QC is a method to verify quality.
QA does not involve executing the program.	QC always involves executing the program.
All team members are responsible for QA.	Testing team is responsible for QC.
QA Example: Verification	QC Example: Validation.
QA means Planning for doing a process.	QC Means Action for executing the planned process.
Statistical Technique used on QA is known as Statistical Process Control (SPC.)	Statistical Technique used on QC is known as Statistical Quality Control (SPC.)
QA makes sure you are doing the right things.	QC makes sure the results of what you've done are what you expected.
QA Defines standards and methodologies to followed in order to meet the customer requirements.	QC ensures that the standards are followed while working on the product.
QA is the process to create the deliverables.	QC is the process to verify that deliverables.

Atmiya University Rajkot

Quality Assurance	Quality Control
QA is responsible for full software development life cycle.	QC is responsible for software testing life cycle.

QUALITY CONTROL

Quality Control (QC) may be defined as a system that is used to maintain a desired level of quality in a product or service. It is a systematic control of various factors that affect the quality of the product. It depends on materials, tools, machines, type of labour, working conditions etc.

QC is a broad term, it involves inspection at particular stage but mere inspection does not mean QC. As opposed to inspection, in quality control activity emphasis is placed on the quality future production. Quality control aims at prevention of defects at the source, relies on effective feedback system and corrective action procedure. Quality control uses inspection as a valuable tool.

According to Juran "Quality control is the regulatory process through which we measureactual quality performance, compare it with standards, and act on the difference". Another definition of quality control is from ANSI/ASQC standard (1978) quality control is defined as "The operational techniques and the activities which sustain a quality of product or service that will satisfy given needs; also the use of such techniques and activities".

Alford and Beatty define QC as "In the broad sense, quality control is the mechanism by which products are made to measure up to specifications determined from customers, demands and transformed into sales engineering and manufacturing requirements, it is concerned with making things right rather than discovering and rejecting those made wrong".

Atmiya University Rajkot

Types of Quality Control

QC is not a function of any single department or a person. It is the primary responsibility of any supervisor to turn out work of acceptable quality. Quality control can be divided into three main sub-areas, those are: 1. Off-line quality control, 2. Statistical process control, and 3. Acceptance sampling plans.

1. **Off-line quality control:** Its procedure deal with measures to select and choose
controllable product and process parameters in such a way that the deviation between the
product or process output and the standard will be minimized. Much of this task is accomplished through product and process design.

Example: Taguchi method, principles of experimental design etc.

2. **Statistical process control:** SPC involves comparing the output of a process or a
service with a standard and taking remedial actions in case of a discrepancy between the two. It also involves determining whether a process can produce a product that meets desired specification or requirements. On-line SPC means that information is gathered about the product, process, or service while it is functional. The corrective action is taken in that operational phase. This is real-time basis.

3. **Acceptance sampling plans:** A plan that determines the number of items to sample and the acceptance criteria of the lot, based on meeting certain stipulated conditions (such as the risk of rejecting a good lot or accepting a bad lot) is known as an acceptance sampling plan.

6.5.2 Steps in Quality Control

Following are the steps in quality control process:

1. Formulate quality policy.

Aniya University Rajkot

2. Set the standards or specifications on the basis of customer's preference, cost and profit.

3. Select inspection plan and set up procedure for checking.

4. Detect deviations from set standards of specifications.

5. Take corrective actions or necessary changes to achieve standards.

6. Decide on salvage method *i.e.*, to decide how the defective parts are disposed of, entire scrap or rework.

7. Coordination of quality problems.

8. Developing quality consciousness both within and outside the organization.

9. Developing procedures for good vendor-vendee relations.

6.5.3 Objectives of Quality Control

Following are the objectives of quality control:

1. To improve the companies income by making the production more acceptable to the customers, *i.e.*, by providing long life, greater usefulness, maintainability etc.

2. To reduce companies cost through reduction of losses due to defects.

3. To achieve interchangeability of manufacture in large scale production.

4. To produce optimal quality at reduced price.

5. To ensure satisfaction of customers with productions or services or high quality level, to build customer goodwill, confidence and reputation of manufacturer.

6. To make inspection prompt to ensure quality control.

7. To check the variation during manufacturing.

The broad areas of application of quality control are incoming material control, process control and product control.

6.5.4 Benefits of Quality Control

_ Improving the quality of products and services.

Atmiya University Rajkot

_ Increasing the productivity of manufacturing processes, commercial business, corporations.

_ Reducing manufacturing and corporate costs.

_ Determining and improving the marketability of products and services.

_ Reducing consumer prices of products and services.

_ Improving and/or assuring on time deliveries and availability.

_ Assisting in the management of an enterprise.

6.5.5 Seven Tools for Quality Control

To make rational decisions using data obtained on the product, or process, or from the consumer, organizations use certain graphical tools. These methods help us learn about the characteristics of a process, its operating state of affairs and the kind of output we may expect from it. Graphical methods are easy to understand and provide comprehensive information; they are a viable tool for the analysis of product and process data. These tools are effect on quality improvement.

The seven quality control tools are:

1. Pareto charts
2. Check sheets
3. Cause and effect diagram
4. Scatter diagrams
5. Histogram
6. Graphs or flow charts
7. Control charts

TOTAL QUALITY MANAGEMENT

Now-a-days, customers demand products/services with greater durability and reliability at the most economic price. This forces producers to strictly follow quality procedures right from design till shipment and

Aniya University Rajkot

installation of the products. So that goal of any competitive industry is to provide a product or service at the most economical costs, ensuring full customer satisfaction. This can be achieved through Total Quality Management (TQM), because, quality is not a technical function, but a systemic process extending throughout all phases of the business, e.g., marketing, design, development, engineering, purchasing, production/operations.

"Total Quality Management is an effective system of integrating the quality development, quality maintenance and quality improvement efforts of various groups in an organization so as to enable marketing, engineering, production and service at the most economical levels which allow for full customer satisfaction".

Benefits of TQM

The benefits of TQM can be classified into the following two categories:

1. Customer satisfaction oriented benefits.

2. Economic improvements oriented benefits.

1. **Customer satisfaction oriented benefits:** The benefits under this category are listed below:

(*a*) Improvement in product quality.

(*b*) Improvement in product design.

(*c*) Improvement in production flow.

(*d*) Improvement in employee morale and quality consciousness.

(*e*) Improvement of product service.

(*f*) Improvement in market place acceptance.

2. **Economic improvements oriented benefits:** The benefits under this category are as

follows:

(*a*) Reductions in operating costs.

Atmiya University Rajkot

(*b*) Reductions in operating losses.

(*c*) Reductions in field service costs.

(*d*) Reductions in liability exposure.

ISO 9000 SERIES

ISO stands for **International Organization for Standardization**. It is an international body, which consists of representatives from more than 90 countries. The national standard bodies of these countries are the members of this organization. **Bureau of Indian Standards** (BIS) are the Indian representative to ISO, ISO and International Electro Technical Commission (IEC)) operate jointly as a single system. These are non-governmental organizations, which exist to provide common standards on international trade of goods and services.

ISO 9000 standards expect firms to have a quality manual that meets ISO guidelines, documents, quality procedures and job instructions, and verification of compliance by third-party auditors.

ISO 9000 series has five international standards on quality managements. They are:

1. ISO 9000 — Quality management and Quality assurance standards
2. ISO 9001 — Quality systems: Quality in design
3. ISO 9002 — Quality systems: Production and Installation
4. ISO 9003 — Quality systems: Final inspection and test
5. ISO 9004 — Quality management and systems

Objectives of ISO 9000 Series

Standard Objectives/Tasks

- ISO 9000 This provides guidelines on selection and use of quality management and quality assurandestandards.
- ISO 9001 It has 20 elements covering design, development, production, installation and servicing.

Atmiya University Rajkot

- ISO 9002 It has 18 elements covering production and installation. It is same as ISO 9001 without the first two tasks, *viz*., design and development. This is applicable for the units excluding R & D functions.
- ISO 9003 It has 12 elements covering final inspection and testing for laboratories and warehouses etc.
- ISO 9004 This provides guidelines to interpret the quality management and quality assurance. This also has suggestions which are not mandatory.

Benefits of ISO 9000 Series

ISO 9000 series provides several tangible and intangible benefits which are listed below:

1. This gives competitive advantage in the global market.
2. Consistency in quality, since ISO helps in detecting non-conformity early which makes it possible to take corrective action.
3. Documentation of quality procedures adds clarity to quality system.
4. ISO 9000 ensures adequate and regular quality training for all members of the organization.
5. ISO helps the customers to have cost effective purchase procedure.
6. The customers while making purchases from companies with ISO certificate need not spend much on inspection and testing. This will reduce the quality cost and lead-time.
7. This will help in increasing productivity.
8. This will aid to improved morale and involvement of workers.
9. The level of job satisfaction would be more.

Atmiya University Rajkot

Concepts of ISO 14000

Focuses on environmental management system that will ensure all operational processes are consistent and effective and will achieve environmental objectives of the organization.

A company should review and continually improve its environmental management system, with the objective of improving its overall environmental performance

Benefits of ISO 14000

An effective EMS provides many benefits to the implementing organization, its customers and stakeholders, and to regulators, including:

- Reduced environmental risk.
- Proactive environmental management.
- Improved employee environmental awareness and performance.
- Increased operating efficiency and cost-effectiveness.
- Increased operating efficiency and cost-effectiveness.
- Enhanced relationships and communication with employees, regulators, and Stakeholders

Atmiya University Rajkot

Contemporary Management Concept (i.e. 5S,JIT,KAIZAN etc)

KAIZEN:

Introduction: What is Kaizen?

Kaizen (Ky ‘zen) is a Japanese term that means continuous improvement taken from words 'Kai', which means continuous and 'zen' which means improvement. Some translate 'Kai' to mean change and 'zen' to mean good, or for the better.

Basic Kaizen principles:

- Throw out all your old fixed ideas on how to do things
- No blame- treat others as you want to be treated
- Think positive – don’t say can’t
- Don’t wait for perfection 50% improvement now is fine
- Don’t wait for perfection. 50% improvement now is fine
- Correct mistakes as soon as they are found
- Don’t substitute money for thinking Creativity before
- Don’t substitute money for thinking – Creativity before Capital
- Keep asking why until you get to the root cause
- Better the wisdom of 5 people that the expertise of 1
- Base decisions on data not opinions
- Improvement is not made from a conference room

Benefits of Kaizen:

- Kaizen involves every employee in making change in most cases small, incremental changes

Atmiya University Rajkot

- It focuses on identifying problems at their source, solving them at their source, and changing standards to ensure the problem stays solved
- It's not unusual for Kaizen to result in 25 to 30 suggestions per employee, per year, and to have over 90% of those implemented
- employees working in Kaizen-based companies generally find work to be easier and more enjoyable, higher employee moral and job satisfaction, and lower turn-over
- Kaizen reduces waste in areas such as inventory, waiting times, transportation, worker motion, employee skills, over production, excess quality and in processes
- Kaizen Improves space utilization, product quality, use of capital, communications, production capacity and employee retention
- Kaizen Provides immediate results. Instead of focusing on large, capital intensive improvements, Kaizen focuses on creative investments that continually solve large numbers of small problems. Large, capital projects and major changes will still be needed, and Kaizen will also improve the capital projects process, but the real power of Kaizen is in the on-going process of continually making small improvements that improve processes and reduce waste
- In Kaizen, problems are opportunities to improve
- Operator’s reactions are good because they have been involved and informed
- Costs and investments reduced
- Create an atmosphere were employee suggestions are valued

Atmiya University Rajkot

SIX SIGMA:

Introduction:

A metric –Greek letter

A measure of process capability' – How capable is our process of meeting our customer's expectations?

A rigorous, structured approach to problem - solving – Includes a defined methodology with Specific tools and tactics

A management philosophy Operational excellence and continuous improvement – Operational Excellence and continuous improvement.

Six Sigma is a Customer - focused Project - focused Results - driven ...approach to Quality

Six Sigma Model DMAIC:

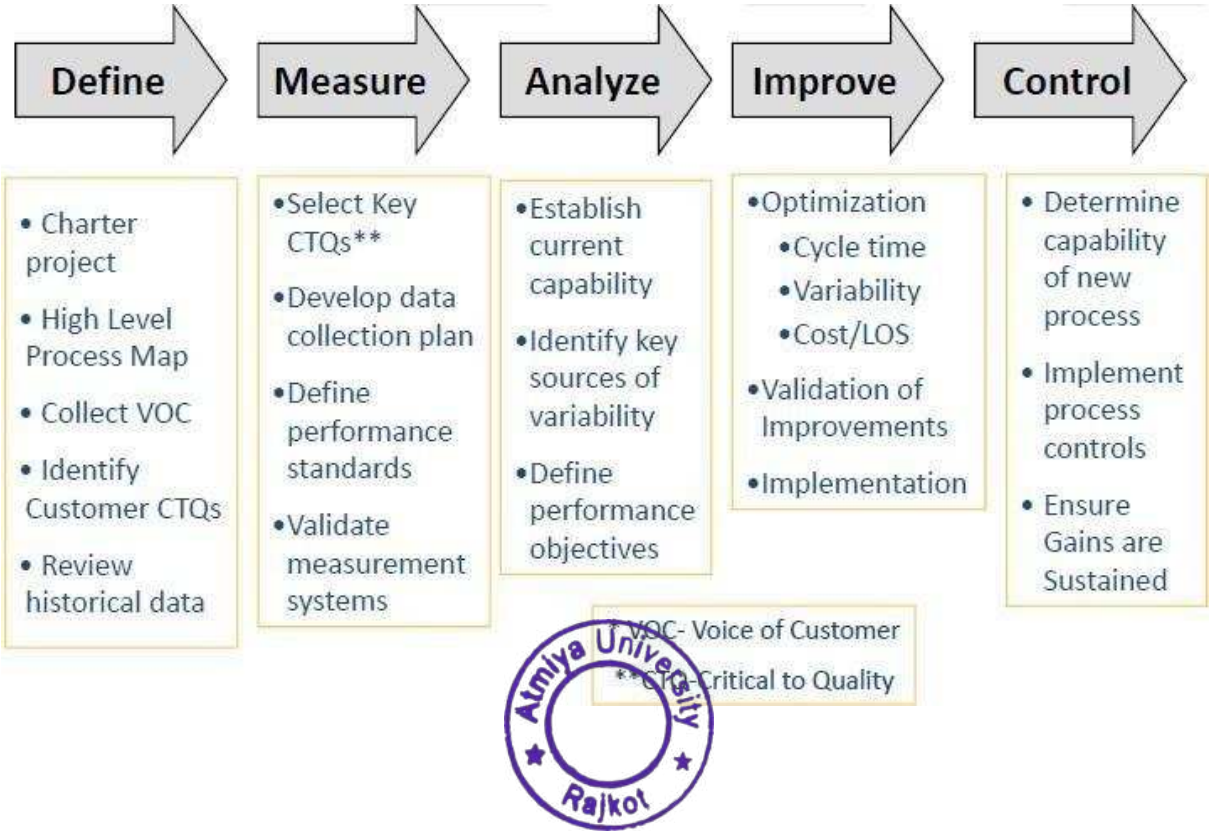

Atmiya University Rajkot

Six Sigma Key Players

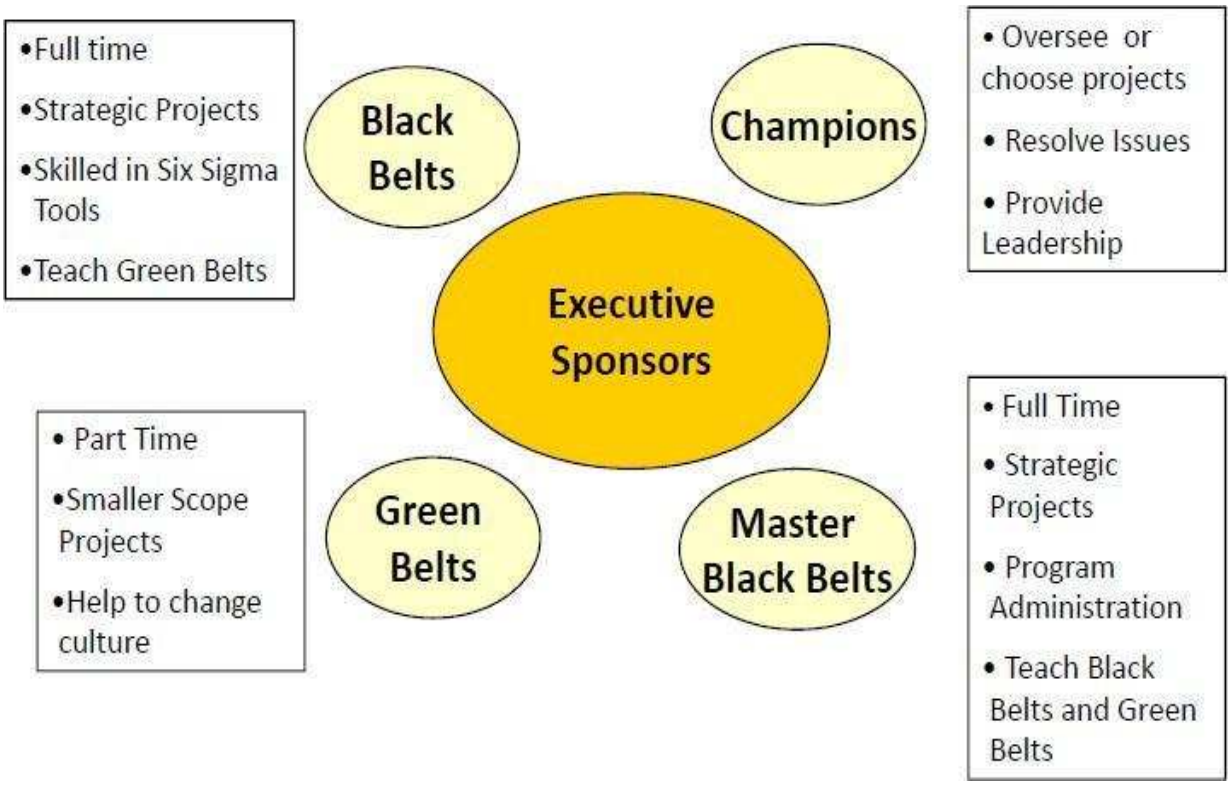

Just In Time

Just-In-Time (JIT) manufacturing has been implemented successfully in Japan for the past 20 years. It is a philosophy as well as a technique that guides a manufacturing company in organizing and managing its business more effectively, and in planning and controlling its operations more efficiently

JIT Concept

The Just-In-Time (JIT) concept is a manufacturing workflow methodology aimed at reducing flow times and costs within production systems and the distribution of materials

Atmiya University Rajkot

JIT principles

JIT principles focus on the elimination of waste by deploying tools such as total quality management, continuous quality improvement, focused factory, reducing setup times, flexible resources, group technology layout, and pull production system.

Objective of JIT

JIT Manufacturing tries to smooth the flow of materials from the suppliers to the customers, thereby increasing the speed of the manufacturing process. The objectives of JIT is to change the manufacturing system gradually rather than drastically:

1. To be more responsive to customers,
2. To have better communication among departments and suppliers,
3. To be more flexible,
4. To achieve better quality,
5. To reduce product cost.

5S approaches

What is 5S ?

5S is a philosophy and a way of organizing and managing the workspace and work flow with the intent to improve efficiency by eliminating waste, improving flow and reducing process unreasonableness.

“It is for improvement of working environment”

Atmiya University Rajkot

5S TERMS TRANSLATED

JAPANESE TERMS	ENGLISH TRANSLATIONS	5S TERMS	DEFINITIONS
Seiri	Tidiness	SORT	Throw away rubbish and unrelated materials.
Seiton	Orderliness	SET IN ORDER	Set things in proper place for quick retrieval and storage.
Seiso	Cleanliness	SHINE	Clean the workplace. Everyone should be a janitor.
Seiketsu	Standardization	STANDARDIZE	Standardize the way of maintaining cleanliness.
Shitsuke	Discipline	SUSTAIN	Make it a way of life. This means commitment.

Benefits of 5S

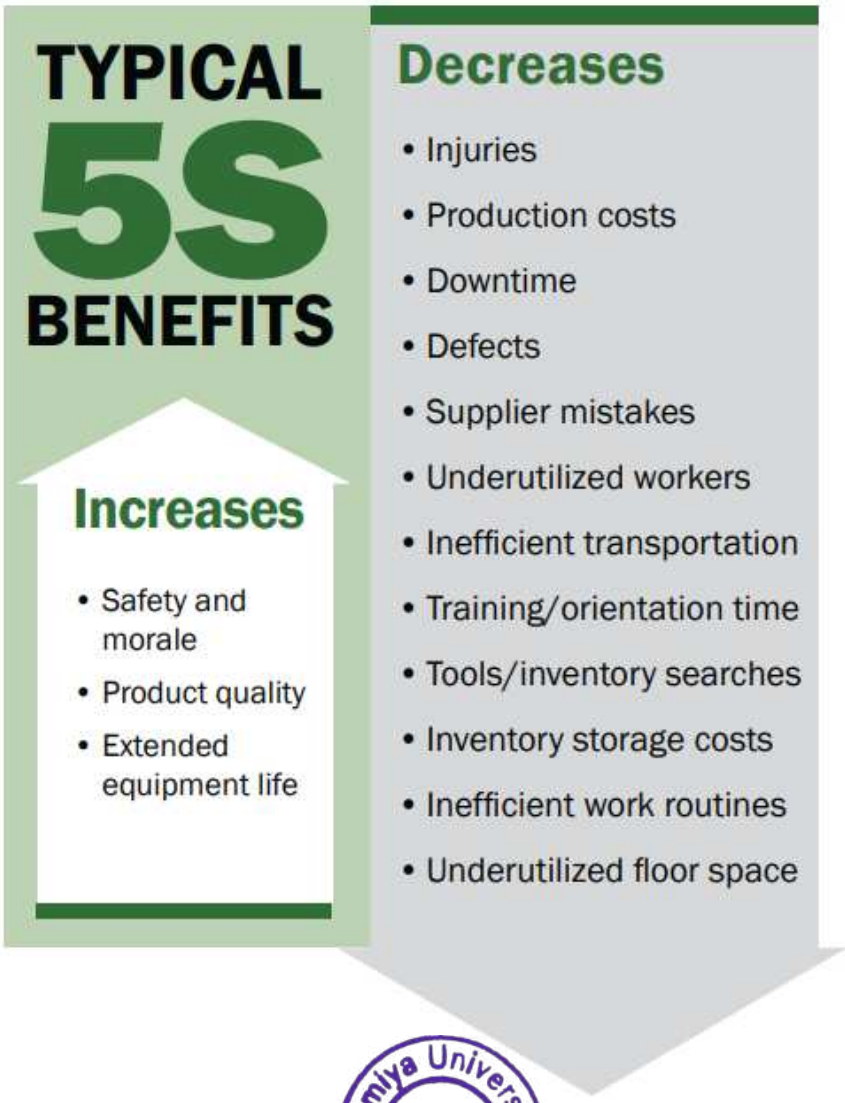

Atmiya University Rajkot

5S activities are to create good working environment through reduction of "Muri", "Mura", and "Muda"

It help to have a basis of strong management of workplace

- What is "Muri", "Mura", and "Muda"?
  - Muri : overburden, unreasonableness or absurdity
  - Mura : unevenness or inconsistency, primarily with physical matter and the human spiritual condition
  - Muda : activity which is wasteful or doesn't add value

See the PDF shared in Class room for more details about 5S

Target of 5S

Targets of Five-S include:

Zero changeovers leading to product/ service diversification

Zero defects leading to higher quality

Zero waste leading to lower cost

Zero delays leading to on time delivery

Zero injuries promoting safety

Zero breakdowns bringing better maintenance

Atmiya University Rajkot

Industrial Safety

Safety Management

A Safety Management System (SMS) is a systematic positive approach to managing safety including the necessary organizational structures, accountabilities, policies and procedures. Safety Management system help to create safe healthy work environment to prevent accident & protect environment. It help to improve safety performance in industries

Terminology

Safety: Control over hazards or Freedom from unacceptable risk of harm.

Accident: Undesirable Event that arises to injury, fatality, ill health, property damage or combination of these.

Hazard: Source, Situation, or Act with a potential for harm in terms of human injury or ill health or property damage or a combination of these all.

Reportable injury: If a person sustained injury & unable to resume his duty within 48 hours.

Risk: Combination of Probability & severity of specific hazardous event occurring.

Risk: Probability of event X Severity of harm

Non Conformance: Any Deviation from work standards, practices, procedure, Regulations, Management System requirements etc, that could be either directly or indirectly lead to injury or illness, damage or loss to property or combination of these.

Dangerous occurrence: Any occurrence of serious nature which could have caused injury/ death to person but did not, is called Dangerous occurrence.

Near Miss: A narrow escape of injury or any harm.

Atmiya University Rajkot

Causes of Accident

Unsafe Act & unsafe Condition are basic cause of any Accident. When both conjugate at one point then accident happened.

In other words, Human and mechanical failure are causes of accident.

5.1 Unsafe Act

Committing mistake by person or Any act that may lead to accident is known as unsafe act.

Following are example of unsafe act:

- Working without wearing safety helmet & safety Shoes
- Working at height without wearing full body harness.
- Taking Rest in working Areas
- working or Taking rest below Hanging Load
- Over speeding
- Operating equipment without qualification or authorization.
- Lack of/or improper use of PPE
- Operating equipment at unsafe speeds
- Failure to warn
- Bypass or removal of safety devices
- Using defective equipment

5.2 Unsafe condition

Any sources or sitution or condition that have potential to create accident is known as unsafe condition.

Following are example of unsafe Condition:

- Damage welding Cable
- Mechanical guard not provided on rotating parts
- Defective sling or lifting equipment.
- Defective work platform
- Floor or platform Opening, Pits

Atmiya University Rajkot

- Poor housekeeping
- Defective tools, equipment or supplies
- Inadequate supports or guards
- Congestion in the workplace
- Inadequate warning systems
- Hazardous atmospheric conditions etc.

Example of Non-conformance

Example (I)

Atmiya University Rajkot

Example (II)

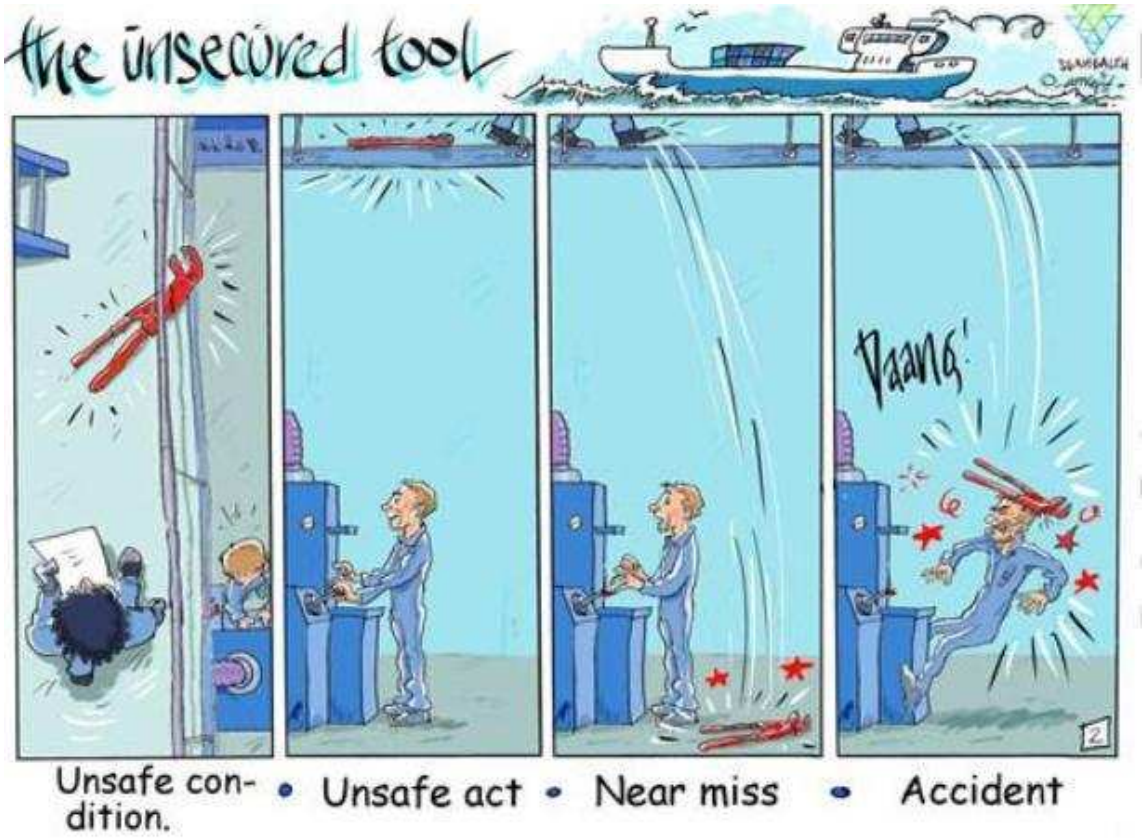

Fire

Fire is a chemical reaction in which combustible material combines with oxygen when external source of heat is applied

Fire Triangle

Atmiya University Rajkot

9.2 Causes of Fire

- Hot Job near flammable material.
- Flammable material storage near heat source area or live power cable or direct sun light.
- Loose Electrical Connection.
- Over load- electrical equipment.
- Smoking.
- Poor Bonding of flammable material
- Poor earthing with flammable material storage tank.
- Static electricity.
- Poor Housekeeping.

THREE PRINCIPLE OF FIRE EXTINCTION

COOLING: To use water

SMOTHERING: Reduce Level of Oxygen

STARVATION: To Reduce Amount of fuel

Types of Fire Extinguisher & Its use

Fire Extinguisher Chart

Extinguisher		Type of Fire				
Colour	Type	Solids (wood, paper, cloth, etc)	Flammable Liquids	Flammable Gasses	Electrical Equipment	Cooking Oils & Fats
	Water	✓ Yes	✗ No	✗ No	✗ No	✗ No
	Foam	✓ Yes	✓ Yes	✗ No	✗ No	✓ Yes
	Dry Powder	✓ Yes	✓ Yes	✓ Yes	✓ Yes	✗ No
	Carbon Dioxide (CO2)	✗ No	✓ Yes	✗ No	✓ Yes	✓ Yes

Atmiya University Rajkot

Personal protective equipment (PPE)

Personal protective equipment (PPE) refers to Safety helmets, safety shoes, gloves, high-visibility clothing, goggles, or equipment designed to protect personnel from injury or exposure. PPE does not eliminate to hazard, it minimises the severity of hazardous event and protect to personnel from exposure of hazard.

Types of personal protective equipment

PPE can be classified in the following categories, based on the type of protection:

- **Head protection** – for example, Safety helmets, hard hats
- **Foot protection** – for example, Safety shoes/boots
- **Respiratory protection** - for example, disposable, cartridge, air line, half or full face
- **Eye protection** – for example, goggles/ spectacles, shields, visors
- **Hearing protection** – for example, plugs & ear muffs.
- **Hand protection** – for example, gloves and barrier creams
- **Working from heights** - for example, harness and fall arrest devices
- **Skin protection** – for example, Full body suit, Heat resistant suit
- **Other personal protective equipment**: This may include PPE for specific job such disposable clothing for working with chemicals, radiation hazards, painting, welding, Gas cutting. Examples include lead aprons for X-Ray protection; sleeve protectors, aprons, coveralls when using chemicals; leather jackets, trousers and spats for welding; thermal and cold protective clothing for work near furnaces and cool rooms.

Selection & use of Personnel Protective Equipment (PPE)

Select to PPE as per specific Job. PPE must be Standard quality and ensure its all parameter through Indian standard or European Nation (EN) and it

Aaniya University Rajkot

should be reliable during using. Standard quality PPE help to protect to person. PPE's not eliminate to hazard,it minimise the severity of injury of hazardous event. Use PPE in proper manner as per manufacturer recommendation. Need to deliver training among all employees regarding Proper use & handling of PPE. Never use defective PPE.

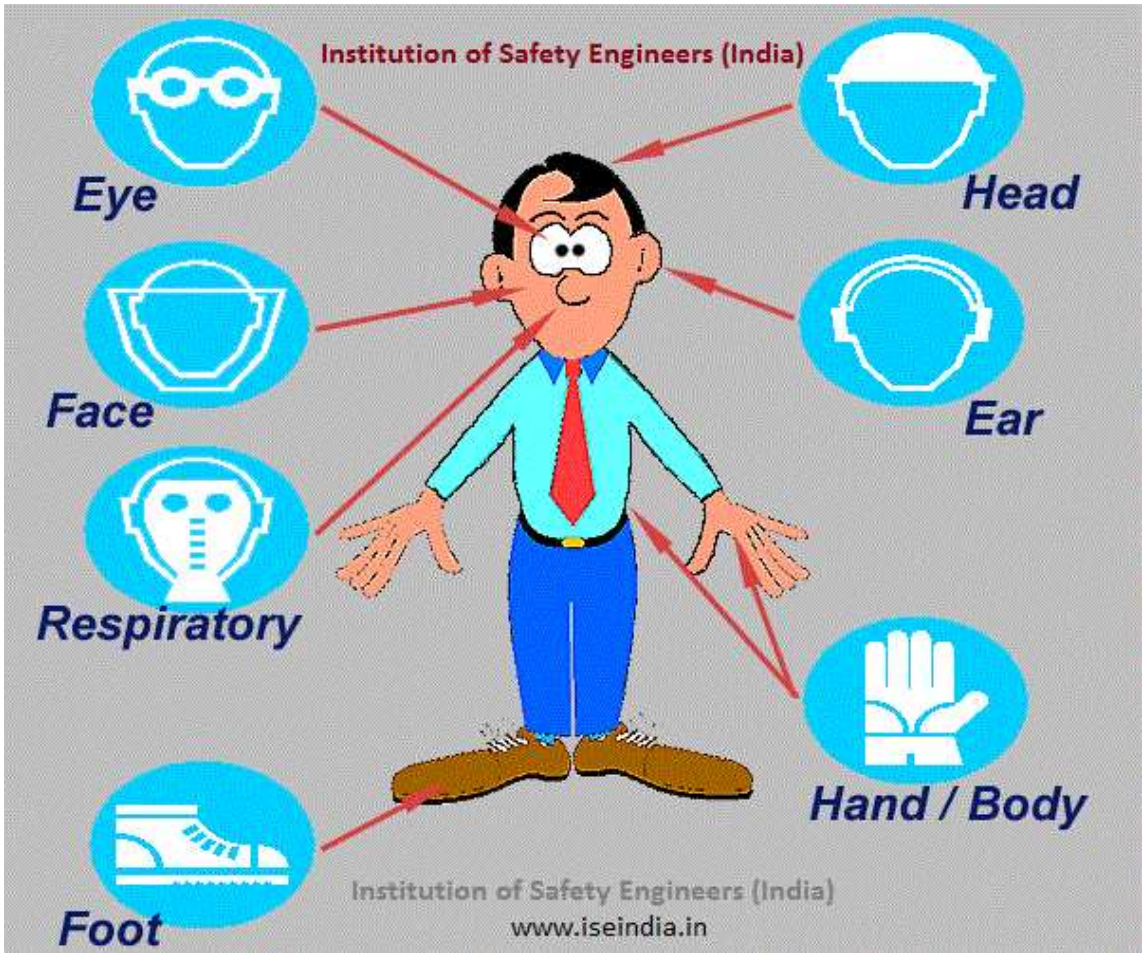

Atmiya University Rajkot

Atmiya University,Rajkot
Faculty of Engineering & Technology

Department of Mechanical Engineering

Prepared by: Shivang S. Jani

Course: Design of Machine Elements (21BTMECC304)

Unit 5: Design of Power Screws

Introduction

The power screws (also known as ***translation screws)*** are used to convert rotary motion into translatory motion.

For example, in the case of the lead screw of lathe, the rotary motion is available but the tool has to be advanced in the direction of the cut against the cutting resistance of the material.

In case of screw jack, a small force applied in the horizontal plane is used to raise or lower a large load.

Atmiya University Rajkot

Power screws are also used in vices, testing machines, presses, etc.

In most of the power screws, the nut has axial motion against the resisting axial force while the screw rotates in its bearings.

In some screws, the screw rotates and moves axially against the resisting force while the nut is stationary and in others the nut rotates while the screw moves axially with no rotation.

Types of Thread Profile Used in Power Screws

1) **<u>Square Thread –</u>**

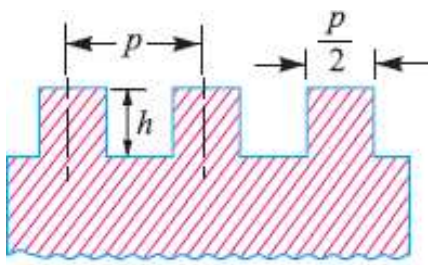

$h = 0.5\,p$

(*a*) Square thread.

Application – Screw jack, Mechanical Press, Clamping devices.

- This threads is adopted for the transmission of power in either direction.
- It is difficult to cut with taps and dies.
- It is generally cut on lathe machine with single point cutting tool.

Atmiya University Rajkot

Advantages –

1. It has maximum efficiency.
2. Minimum radial or bursting pressure on nut.
3. These are of self locking type.

Limitations –

1. Strength of square thread is less as compared with other forms of threads.
2. These threads can not be used conveniently with split nut because of wear compensation is not possible and it is difficult in engagement & disengagement.

2) <u>Acme Threads</u> –

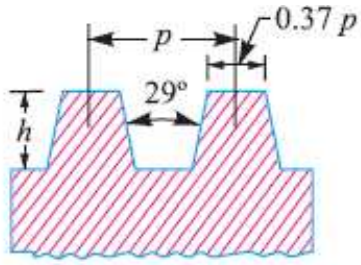

$h = 0.5\,p + 0.25$ mm

(*b*) Acme thread.

- The acme thread are not efficient as square thread.
- The acme threads are easier to cut and are stronger than square threads.
- **Application** – Lead screw of a lathe machine.

Atmiya University Rajkot

Advantages –

1. These permits the use of split nut which can be easy for engagement & disengagement and compensate wear.
2. These are stronger than the square threads in shear because of the larger C/s at the root.

Limitations –

1. The efficiency is lower than that of square thread due to slop given to the sides.
2. The slop on the sides introduces some brusting pressure on the nut.

3) <u>Trapezoidal Threads</u> –

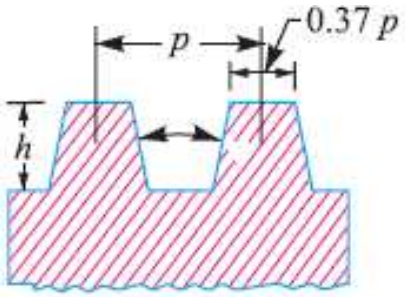

$h = 0.5\,p + 0.25$ mm

(*b*) Acme thread.

The trapezoidal threads are similar to Acme threads except the thread angle is 30^0 in trapezoidal threads.

Atmiya University Rajkot

4) Buttress Threads –

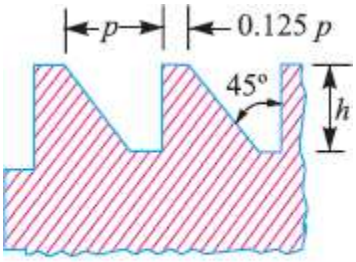

$h = 0.75\,p$

(c) Buttress thread.

- A buttress thread *is used when large forces act along the screw axis in* one direction only.
- This thread combines the higher efficiency of square thread and the ease of cutting and the adaptability to a split nut of acme thread.
- It is stronger than other threads because of greater thickness at the base of the thread.
- The buttress thread has limited use for power transmission.
- It is employed as the thread for light jack screws and vices.

Torque Required to Raise Load for Square Threaded Screws

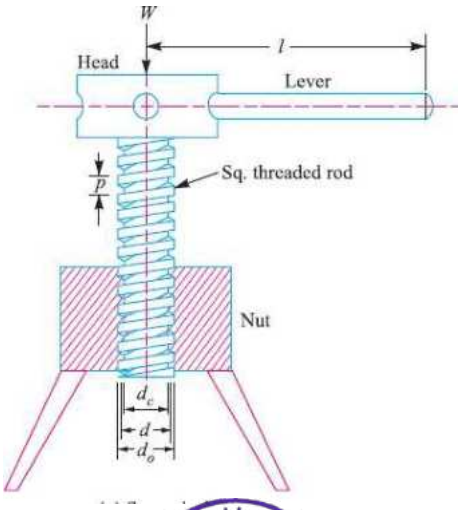

Atmiya University Rajkot

Atmiya University,Rajkot
Faculty of Engineering & Technology

Department of Mechanical Engineering

Prepared by: Shivang S. Jani

Course: Design of Machine Elements (21BTMECC304)

Unit I: Design against Static & Fluctuating Load

Eccentric Loading - Direct and Bending Stresses Combined

- An external load, whose line of action is parallel but does not coincide with the centroidal axis of the machine component, is known as an ***eccentric load.***
- ***The distance between the centroidal axis*** of the machine component and the eccentric load is called ***eccentricity and is generally denoted by e.***
- The examples of eccentric loading, from the subject point of view, are *C-clamps, punching machines,* brackets, offset connecting links etc.

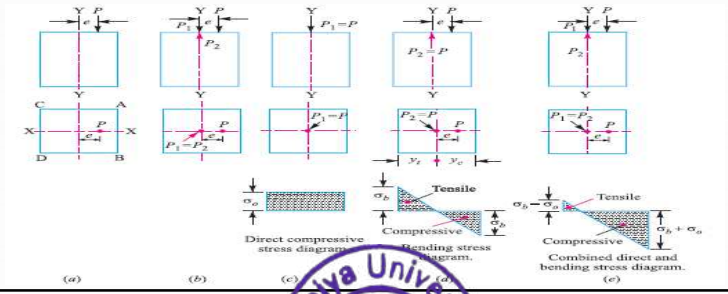

Atmiya University Rajkot

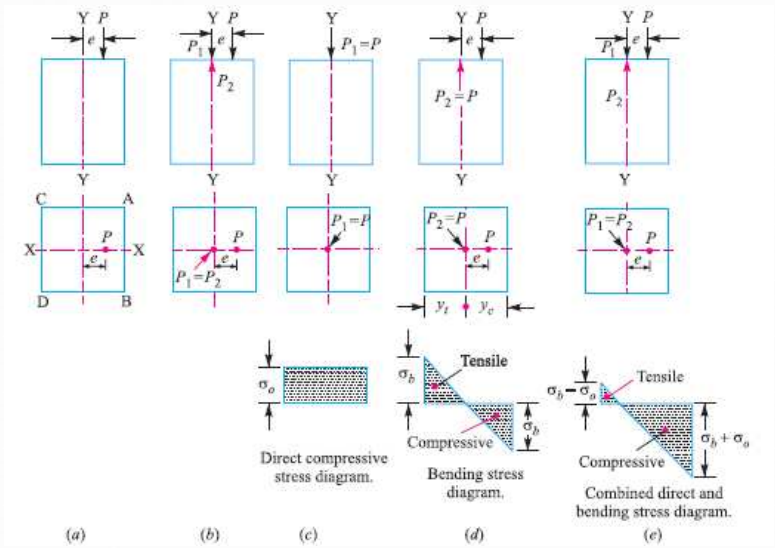

- Consider a short prismatic bar subjected to a compressive load P acting at an eccentricity of e as shown in Fig. (a).
- Let us introduce two forces P_1 and P_2 along the centre line or neutral axis equal in magnitude to P, without altering the equilibrium of the bar as shown in Fig. (b).
- A little consideration will show that the force P_1 will induce a direct compressive stress over the entire cross-section of the bar, as shown in Fig.(c).
- The magnitude of this direct compressive stress is given by,

$$\sigma_o = \frac{P_1}{A} \text{ or } \frac{P}{A},$$

- where A is the cross-sectional area of the bar.
- The forces P_1 and P_2 will form a couple equal to P × e which will cause bending stress.
- This bending stress is compressive at the edge AB and tensile at the edge CD, as shown in Fig.(d).

Atmiya University Rajkot

- The magnitude of bending stress at the edge *AB is given by,*

$$\sigma_b = \frac{P \cdot e \cdot y_c}{I} \text{ (compressive)}$$

- and bending stress at the edge *CD,*

$$\sigma_b = \frac{P \cdot e \cdot y_t}{I} \text{ (tensile)}$$

- Where, yc and yt = Distances of the extreme fibres on the compressive and tensile sides, from the neutral axis respectively, and
- I = Second moment of area of the section about the neutral axis i.e.Y-axis
- According to the principle of superposition, the maximum or the resultant compressive stress at the edge *AB,*

$$\sigma_c = \frac{P \cdot e \cdot y_c}{I} + \frac{P}{A} = \frac{M}{Z} + \frac{P}{A} = \sigma_b + \sigma_o$$

- The maximum or resultant tensile stress at the edge ***CD,***

$$\sigma_t = \frac{P \cdot e \cdot y_t}{I} - \frac{P}{A} = \frac{M}{Z} - \frac{P}{A} = \sigma_b - \sigma_o$$

A rectangular strut is 150 mm wide and 120 mm thick. It carries a load of 180 kN at an eccentricity of 10 mm in a plane bisecting the thickness as shown in Fig. Find the maximum and minimum intensities of stress in the section.

Solution. Given : $b = 150$ mm ; $d = 120$ mm ; $P = 180$ kN $= 180 \times 10^3$ N ; $e = 10$ mm

We know that cross-sectional area of the strut,

$$A = b.d = 150 \times 120 = 18 \times 10^3 \text{ mm}^2$$

∴ Direct compressive stress,

$$\sigma_o = \frac{P}{A} = \frac{180 \times 10^3}{18 \times 10^3} = 10 \text{ N/mm}^2 = 10 \text{ MPa}$$

Section modulus for the strut,

$$Z = \frac{I_{YY}}{y} = \frac{d \cdot b^3/12}{b/2} = \frac{d \cdot b^2}{6} = \frac{120\,(150)^2}{6} = 450 \times 10^3 \text{ mm}^3$$

Bending moment, $M = P.e = 180 \times 10^3 \times 10 = 1.8 \times 10^6$ N-mm

∴ Bending stress, $\sigma_b = \frac{M}{Z} = \frac{1.8 \times 10^6}{450 \times 10^3} = 4 \text{ N/mm}^2 = 4 \text{ MPa}$

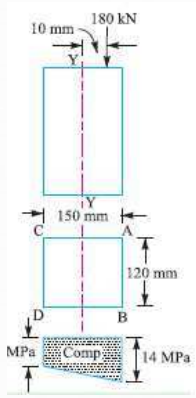

Atmiya University Rajkot

- Since σ_o *is greater than* σ_b, *therefore the entire cross-section of the strut will be subjected to* compressive stress. The maximum intensity of compressive stress will be at the edge *AB and* minimum at the edge *CD.*
- *Maximum intensity of compressive stress at the edge AB*

  $= \sigma_o + \sigma_b = 10 + 4 = 14$ *MPa* ***Ans.***
- *Minimum intensity of compressive stress at the edge CD*

  $= \sigma_o - \sigma_b = 10 - 4 = 6$ *MPa* ***Ans***

A hollow circular column of external diameter 250 mm and internal diameter 200 mm, carries a projecting bracket on which a load of 20 kN rests, as shown in Fig. The centre of the load from the centre of the column is 500 mm. Find the stresses at the sides of the column.

Solution. Given : $D = 250$ mm ; $d = 200$ mm ; $P = 20$ kN $= 20 \times 10^3$ N ; $e = 500$ mm

We know that cross-sectional area of column,

$$A = \frac{\pi}{4}(D^2 - d^2)$$

$$= \frac{\pi}{4}[(250)^2 - (200)^2]$$

$$= 17\,674 \text{ mm}^2$$

∴ Direct compressive stress,

$$\sigma_o = \frac{P}{A} = \frac{20 \times 10^3}{17\,674} = 1.13 \text{ N/mm}^2$$

$$= 1.13 \text{ MPa}$$

Section modulus for the column,

$$Z = \frac{I}{y} = \frac{\frac{\pi}{64}[D^4 - d^4]}{D/2} = \frac{\frac{\pi}{64}[(250)^4 - (200)^4]}{250/2}$$

$$= 905.8 \times 10^3 \text{ mm}^3$$

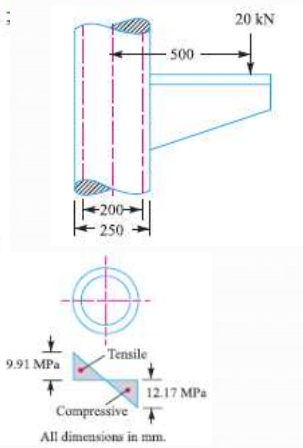

Atmiya University Rajkot

Bending moment,

$$M = P.e$$
$$= 20 \times 10^3 \times 500$$
$$= 10 \times 10^6 \text{ N-mm}$$

∴ Bending stress,

$$\sigma_b = \frac{M}{Z} = \frac{10 \times 10^6}{905.8 \times 10^3}$$
$$= 11.04 \text{ N/mm}^2$$
$$= 11.04 \text{ MPa}$$

Since σ_o is less than σ_b, therefore right hand side of the column will be subjected to compressive stress and the left hand side of the column will be subjected to tensile stress.

∴ Maximum compressive stress,

$$\sigma_c = \sigma_b + \sigma_o = 11.04 + 1.13$$
$$= 12.17 \text{ MPa Ans.}$$

Maximum tensile stress,

$\sigma_t = \sigma_b \quad \sigma_o$ = ***11.04 1.13 = 9.91 MPa Ans.***

Atmiya University Rajkot

Atmiya University Rajkot
Faculty of Engineering & Technology, Department of Mechanical Engineering
M.Tech Mechanical Production

Engineering Material Technology Important questions & answers

Unit 5 Corrosion and degradation of Materials

1. what is corrosion? explain corrosion mechanism. Explain different types of corrosion. Explain different methods of preventing corrosion

Ans:

Corrosion of metals refers to the gradual degradation and deterioration of metals due to chemical reactions with their environment. This process often results in the formation of oxides, hydroxides, or sulfides on the surface of the metal, which can weaken the material and compromise its structural integrity. Corrosion can occur in a variety of environments, including exposure to air, water, acids, or salts.

corrosion mechanism

The corrosion mechanism involves a series of chemical reactions that occur between the metal and its environment. The process can be divided into two main stages: the anodic reaction and the cathodic reaction.

During the anodic reaction, the metal atoms lose electrons and become positively charged ions. These ions then enter the surrounding solution, leaving behind negatively charged electrons on the metal surface. This process is also known as oxidation, and it occurs at the anode, which is typically the surface of the metal that is exposed to the environment.

At the same time, the cathodic reaction occurs. This involves the reduction of a substance in the surrounding solution, which can be oxygen, hydrogen ions, or other substances. During this process, the negatively charged electrons left on the metal surface by the anodic reaction combine with the cathodic reactant, effectively neutralizing the charge. This process occurs at the cathode, which is typically an area of the metal surface that is less exposed to the environment.

The combination of the anodic and cathodic reactions leads to the formation of corrosion products, such as metal oxides or hydroxides, which can accumulate on the metal surface and further accelerate the corrosion process. The exact nature of the corrosion mechanism depends on factors such as the type of metal, the nature of the environment, and the presence of any protective coatings or inhibitors

Some common types of corrosion include:

Uniform corrosion: This type of corrosion occurs evenly across the surface of a metal and can result in a loss of material thickness.

Galvanic corrosion: This occurs when two different metals come into contact in the presence of an electrolyte (such as saltwater), resulting in a flow of electrons between the metals and the corrosion of the more reactive metal.

Pitting corrosion: This type of corrosion results in small pits or holes in the metal surface and can occur in localized areas where the protective oxide layer has been damaged.

Atmiya University Rajkot

Crevice corrosion: This type of corrosion occurs in areas where there is limited oxygen flow, such as in crevices or gaps between metal surfaces.

Preventing or controlling corrosion can involve a range of techniques, including the use of protective coatings, such as paint or plating, or the addition of corrosion inhibitors to the environment. Proper maintenance, inspection, and cleaning of metal surfaces can also help to prevent corrosion.

Microbial corrosion

Microbial corrosion, or bacterial corrosion, is a corrosion caused or promoted by microorganisms, usually chemoautotrophs. It can apply to both metals and non-metallic materials, in both the presence and lack of oxygen. Sulfate-reducing bacteria are common in lack of oxygen; they produce hydrogen sulfide, causing sulfide stress cracking. In presence of oxygen, some bacteria directly oxidize iron to iron oxides and hydroxides, other bacteria oxidize sulfur and produce sulfuric acid. Concentration cells can form in the deposits of corrosion products, causing and enhancing galvanic corrosion.

High temperature corrosion

High temperature corrosion is chemical deterioration of a material (typically a metal) under very high temperature conditions. This non-galvanic form of corrosion can occur when a metal is subject to a high temperature atmosphere containing oxygen, sulphur or other compounds capable of oxidising (or assisting the oxidation of) the material concerned. For example, materials used in aerospace, power generation and even in car engines have to resist sustained periods at high temperature in which they may be exposed to an atmosphere containing potentially highly corrosive products of combustion.

The products of high temperature corrosion can potentially be turned to the advantage of the engineer. The formation of oxides on stainless steels, for example, can provide a protective layer preventing further atmospheric attack, allowing for a material to be used for sustained periods at both room and high temperature in hostile conditions. Such high temperature corrosion products in the form of compacted oxide layer glazes have also been shown to prevent or reduce wear during high temperature sliding contact of metallic (or metallic and ceramic) surfaces.

There are several methods of preventing corrosion, including:

1. Protective coatings: Applying a protective coating, such as paint or a polymer film, to the metal surface can prevent it from coming into contact with its environment and reduce the likelihood of corrosion.
2. Cathodic protection: This technique involves introducing a sacrificial anode made of a more reactive metal into the environment, which corrodes instead of the metal being protected. This can be done through galvanization, where the metal surface is coated with a layer of zinc or other more reactive metal, or through impressed current cathodic protection, which involves applying an electric current to the metal surface.
3. Corrosion inhibitors: Adding a chemical inhibitor, such as a corrosion inhibitor, to the environment can slow down the rate of corrosion by reacting with the metal surface and forming a protective layer.
4. Alloying: Mixing the metal with small amounts of other metals can improve its corrosion resistance, as the alloyed metal may be less reactive or more resistant to corrosion.

Atmiya University Rajkot

5. Environmental modification: Modifying the environment in which the metal is exposed can also prevent corrosion. For example, reducing the moisture content or acidity of the environment can reduce the likelihood of corrosion.
6. Proper maintenance and cleaning: Regular inspection, cleaning, and maintenance of metal surfaces can help prevent corrosion by removing any accumulated corrosion products or contaminants that can accelerate the corrosion process.

   The choice of corrosion prevention method depends on factors such as the type of metal, the nature of the environment, the severity of the corrosion problem, and the cost and practicality of implementing the prevention method.

2. what are the application of ceramic material? explain Corrosion of ceramic materials

Ans

Ceramic materials have a wide range of applications due to their unique properties, including high strength, hardness, wear resistance, and thermal stability. Some common applications of ceramic materials are:

1. Electronics: Ceramics are used in the production of electronic components such as capacitors, resistors, and insulators due to their excellent electrical and thermal properties.
2. Aerospace: Ceramic materials are used in the aerospace industry for applications such as heat shields, turbine blades, and rocket components due to their high temperature and wear resistance.
3. Medical: Ceramic materials are used in medical applications such as dental implants, prosthetic joints, and bone substitutes due to their biocompatibility and strength.
4. Automotive: Ceramics are used in the automotive industry for applications such as brake discs and engine components due to their high strength, hardness, and wear resistance.
5. Energy: Ceramic materials are used in the energy industry for applications such as fuel cells, solar cells, and batteries due to their ability to withstand high temperatures and corrosive environments.
6. Construction: Ceramics are used in construction applications such as tiles, bricks, and pipes due to their durability and resistance to abrasion and corrosion.
7. Kitchenware: Ceramics are used in the production of kitchenware such as plates, bowls, and mugs due to their ability to retain heat and resist staining.

These are just a few examples of the many applications of ceramic materials. Due to their unique properties, ceramics are widely used in many different industries and applications.

Ceramic materials are typically resistant to corrosion due to their high chemical stability and inertness. However, under certain conditions, ceramics can corrode, which can result in degradation of their mechanical properties and performance.

Ceramic materials can corrode through a variety of mechanisms, including chemical attack, ion exchange, and oxidation. Chemical attack occurs when a ceramic material reacts with a corrosive substance, such as an acid or alkali, and forms a soluble compound that dissolves and weakens the ceramic. Ion exchange occurs when ions from a corrosive substance penetrate into the ceramic material and displace ions within the material, leading to a change in its composition and properties. Oxidation occurs when a ceramic material is exposed to oxygen at high temperatures, leading to the formation of an oxide layer that can weaken the material.

Atmiya University Rajkot

The susceptibility of ceramic materials to corrosion depends on a number of factors, including the chemical composition of the material, the type and concentration of the corrosive substance, and the temperature and pressure conditions. In general, ceramic materials that are chemically inert and have low porosity are more resistant to corrosion.

To prevent corrosion of ceramic materials, it is important to carefully consider the materials and conditions to which they will be exposed, and to select ceramics with appropriate properties and resistance to the specific corrosive substances present. Surface coatings and treatments can also be used to improve the corrosion resistance of ceramics.

3. how polymer materials are classified? Explain degradation of polymer material.

Ans

Polymer materials are classified based on their structure, properties, and mode of polymerization. Here are some common classifications of polymer materials:

Classification based on structure: Polymers can be classified into three categories based on their structure: linear, branched, and cross-linked. Linear polymers consist of long chains of repeating units with few or no branches. Branched polymers have chains that contain side chains or branches, which can affect their properties. Cross-linked polymers have chains that are chemically bonded together to form a three-dimensional network, which can increase their stiffness and strength.

Classification based on mode of polymerization: Polymers can be classified into two categories based on their mode of polymerization: addition polymers and condensation polymers. Addition polymers are formed by the addition of monomers with unsaturated bonds, while condensation polymers are formed by the condensation of two or more different monomers with the loss of a small molecule, such as water.

Classification based on properties: Polymers can be classified into several categories based on their properties, such as thermoplastics, thermosets, elastomers, and fibers. Thermoplastics are polymers that can be melted and remolded, while thermosets are polymers that are irreversibly cured by heat or chemical reaction and cannot be remolded. Elastomers are polymers that exhibit rubber-like elasticity and can be stretched and returned to their original shape. Fibers are polymers that are elongated and oriented to form long strands, which can be used for applications such as textiles and composites.

Classification based on source: Polymers can be classified based on their source, such as natural polymers (e.g. cellulose, proteins) or synthetic polymers (e.g. polyethylene, polypropylene).

These are some common classifications of polymer materials, and there may be other ways to classify polymers based on different criteria.

Polymer materials are susceptible to degradation over time due to exposure to various environmental factors, such as heat, light, chemicals, and mechanical stress. Degradation can result in changes in the polymer's physical and mechanical properties, such as reduced strength, stiffness, and toughness, as well as discoloration, cracking, and fragmentation.

Polymer degradation can occur through several mechanisms, including thermal degradation, photo-oxidation, hydrolysis, and biodegradation. Thermal degradation occurs when a polymer is exposed to high temperatures, which can cause the polymer chains to break down and result in the formation of small, volatile molecules. Photo-oxidation occurs when a polymer is exposed to ultraviolet (UV) radiation, which can initiate chemical reactions that break down the polymer chains and lead to the formation of free radicals. Hydrolysis

Atmiya University Rajkot

occurs when a polymer is exposed to water or other hydrolyzing agents, which can break the polymer chains and lead to the formation of smaller molecules. Biodegradation occurs when a polymer is exposed to microorganisms, which can break down the polymer chains through enzymatic activity.

The susceptibility of a polymer material to degradation depends on its chemical structure, molecular weight, crystallinity, and the specific environmental conditions to which it is exposed. For example, polymers with more highly branched or crosslinked structures tend to be more resistant to degradation than linear polymers. Similarly, polymers with higher molecular weights and crystallinity tend to be more resistant to degradation than those with lower molecular weights and amorphous structures.

To minimize degradation of polymer materials, it is important to carefully consider the materials and conditions to which they will be exposed, and to select polymers with appropriate properties and resistance to the specific environmental factors present. Additionally, protective coatings, stabilizers, and other additives can be used to improve the durability and longevity of polymer materials

4. **give in details Economic, environmental, and societal issues in Engineering materials.**

Ans

Economic, environmental, and societal issues are critical considerations in the selection, use, and disposal of engineering materials. Here are some details about each of these issues:

Economic issues: The cost of engineering materials is a significant factor in their selection and use. Materials with high production costs or limited availability may be less desirable than those that are more cost-effective or readily available. Additionally, the cost of materials can impact the cost of the final product or system, which can affect its competitiveness in the marketplace. Therefore, engineers must consider the economic feasibility of materials during the design process, taking into account factors such as production costs, material availability, and market demand.

Environmental issues: The environmental impact of engineering materials is another critical consideration. Materials that are difficult to recycle or dispose of can contribute to waste and pollution, leading to environmental degradation. Additionally, the production of materials can generate significant greenhouse gas emissions and other pollutants, contributing to climate change and other environmental problems. Engineers must consider the environmental impact of materials throughout their lifecycle, from raw material extraction and production to disposal or recycling.

Societal issues: The societal impact of engineering materials is also an important consideration. Materials that are hazardous to human health or safety, or that have negative social or cultural implications, may be less desirable than those that are more socially responsible. For example, materials that are associated with exploitation of workers or damage to local communities may be viewed as unethical or unacceptable. Additionally, the use of certain materials may have cultural or political implications, such as the use of materials associated with certain religions or political ideologies. Engineers must consider the societal impact of materials, taking into account factors such as social responsibility, cultural sensitivity, and ethical considerations.

In conclusion, economic, environmental, and societal issues are critical considerations in the selection, use, and disposal of engineering materials. By taking into account these issues,

Atmiya University Rajkot

engineers can design products and systems that are more sustainable, cost-effective, and socially responsible

5. **Prepare a short notes on Environment effect of corrosion**

Ans

Corrosion is a major environmental issue that affects many industries and infrastructure around the world. Corrosion occurs when materials are exposed to environmental conditions that cause them to deteriorate and lose their structural integrity. The environmental effects of corrosion can be significant and can include the following:

Pollution: Corrosion can lead to the release of toxic materials into the environment, such as heavy metals or chemicals used in anti-corrosion coatings. These materials can pollute waterways, soils, and air, leading to environmental and health problems.

Economic impact: Corrosion can result in significant economic losses due to damage to infrastructure, equipment, and materials. For example, corrosion in pipelines can lead to leaks and spills, resulting in costly repairs and cleanup efforts. Corrosion can also lead to reduced efficiency and performance of equipment, resulting in increased maintenance costs and downtime.

Safety hazards: Corrosion can compromise the safety and integrity of infrastructure and equipment, leading to safety hazards and potential accidents. For example, corrosion in structural supports or bridges can weaken them, leading to collapse and endangering lives.

Environmental degradation: Corrosion can contribute to environmental degradation by causing materials to break down and release pollutants into the environment. For example, corrosion in underground storage tanks can lead to leaks of hazardous materials, contaminating soil and groundwater.

Sustainability: Corrosion can also have implications for sustainability, as the need for frequent repairs and replacements can lead to increased consumption of materials and resources, as well as increased waste generation.

In conclusion, the environmental effects of corrosion can be significant and wide-ranging, affecting not only the materials and infrastructure directly involved but also the surrounding environment and communities. Effective corrosion prevention and mitigation strategies are critical to minimizing these effects and ensuring the sustainability of infrastructure and industries.

6. **Explain corrosion mechanism in detail.**

Corrosion is a natural process that occurs when metals are exposed to an environment containing moisture and other corrosive agents such as oxygen and acids. The mechanism of corrosion is complex and involves several chemical and electrochemical reactions that occur on the metal surface. In this answer, we will discuss the corrosion mechanism in detail.

Anodic and cathodic reactions: Corrosion occurs due to the electrochemical reactions that take place on the metal surface. When a metal is exposed to an electrolyte such as water, it

Aniya University Rajkot

acts as an anode and a cathode, and electrochemical reactions occur at both locations. At the anode, metal ions are oxidized, releasing electrons, and forming metal ions in solution. This process is known as oxidation. At the cathode, reduction occurs, and the electrons that were released at the anode combine with hydrogen ions in the solution to form hydrogen gas.

Corrosion cells: Corrosion cells are electrochemical cells that form on the metal surface when the anode and cathode reactions occur. These cells have an anode, a cathode, and an electrolyte. The anode is the site where metal ions are released, and the cathode is the site where reduction occurs. The electrolyte is the medium that allows the flow of ions between the anode and the cathode.

Factors that influence corrosion: Several factors can influence the rate of corrosion, including the nature of the metal, the nature of the electrolyte, and the environment. The nature of the metal is critical because different metals have different corrosion potentials. For example, noble metals such as gold and platinum have a low corrosion potential, while base metals such as iron and aluminum have a high corrosion potential. The nature of the electrolyte is also essential because different electrolytes have different corrosive properties. For example, acids are highly corrosive and can dissolve metals quickly, while water can corrode metals slowly over time.

Types of corrosion: There are several types of corrosion, including uniform corrosion, pitting corrosion, crevice corrosion, galvanic corrosion, and stress corrosion cracking. Uniform corrosion occurs when the metal corrodes evenly over its entire surface. Pitting corrosion occurs when localized corrosion forms small pits on the metal surface. Crevice corrosion occurs when corrosion forms in crevices or gaps between two surfaces. Galvanic corrosion occurs when two dissimilar metals are in contact, and a corrosion cell forms. Stress corrosion cracking occurs when a metal is under stress and corrodes.

In conclusion, the mechanism of corrosion is a complex process that involves several chemical and electrochemical reactions. Corrosion cells form on the metal surface when the anode and cathode reactions occur, and the rate of corrosion depends on several factors such as the nature of the metal, the nature of the electrolyte, and the environment. Different types of corrosion can occur depending on the circumstances, and it is essential to take appropriate measures to prevent or mitigate corrosion to ensure the longevity and safety of metal structures and equipment.

Atmiya University
Rajkot

Unit 4-Application and Processing of Different Materials

1. **Define smart materials. Write applications of smart materials in engineering.**

Ans

Smart materials are a class of materials that have the ability to respond to changes in their environment in a controlled and predictable manner. These materials have unique properties that enable them to change their physical or chemical properties, such as shape, size, color, or conductivity, in response to external stimuli, such as temperature, light, pressure, or electric fields. The most common types of smart materials are shape-memory alloys, piezoelectric materials, magnetostrictive materials, electroactive polymers, and smart hydrogels.

Applications of smart materials in engineering are numerous, and some examples are:

Aerospace engineering: Shape-memory alloys are used in aerospace engineering for their ability to change shape in response to temperature changes. This property is used in the design of actuator systems, such as wing flaps and landing gear, that can change shape or position in response to changing environmental conditions.

Biomedical engineering: Smart materials are used in biomedical engineering for their ability to respond to biological signals and stimuli. For example, smart hydrogels can be used in drug delivery systems that release drugs in response to changes in pH or temperature in the body.

Civil engineering: Smart materials are used in civil engineering for structural health monitoring and damage detection. For example, piezoelectric materials can be used as sensors to detect cracks or damage in structures, such as bridges or buildings.

Robotics: Smart materials are used in robotics for their ability to generate motion or force in response to electrical or magnetic fields. For example, magnetostrictive materials can be used in the design of robotic actuators that generate precise and controllable movements.

Energy systems: Smart materials are used in energy systems for their ability to convert energy from one form to another. For example, piezoelectric materials can be used in energy harvesting systems that convert mechanical vibrations or pressure into electrical energy.

In conclusion, smart materials have diverse and exciting applications in engineering, and their unique properties make them attractive for a wide range of industries and fields.

2. **Elaborate different types of ceramics**

Ans

Ceramics are a class of materials that are primarily composed of inorganic compounds and are processed and manufactured using high-temperature methods. Ceramics are known for their unique physical and chemical properties, such as high strength, hardness, wear resistance, and thermal and electrical insulation, which make them useful in a variety of industrial, engineering, and biomedical applications. There are several types of ceramics, including:

Traditional ceramics: Traditional ceramics are made from clay minerals and other natural materials, such as feldspar, quartz, and kaolin. They are processed using traditional

Aaniya University Rajkot

techniques, such as shaping, drying, and firing, and include products such as pottery, bricks, and tiles.

Advanced ceramics: Advanced ceramics are a newer class of materials that are designed to have specific properties for high-performance applications. They are composed of ceramic compounds, such as alumina, silicon carbide, and zirconia, and are processed using advanced methods, such as sintering, hot pressing, and chemical vapor deposition. They are used in applications such as cutting tools, biomedical implants, and aerospace components.

Refractory ceramics: Refractory ceramics are designed to withstand high temperatures and harsh environments. They are used in applications such as furnaces, kilns, and incinerators. Refractory ceramics are made from materials such as alumina, silica, and magnesia.

Glass ceramics: Glass ceramics are a type of ceramic material that is processed by melting a mixture of inorganic compounds and then cooling it to form a glass, which is then crystallized by heat treatment. They have a unique combination of properties, such as high strength, transparency, and thermal shock resistance, and are used in applications such as cookware, dental restorations, and missile nose cones.

Bio-ceramics: Bio-ceramics are ceramic materials that are used in biomedical applications. They are biocompatible, meaning they do not harm living tissue, and are used in applications such as dental implants, bone substitutes, and implantable sensors. Bio-ceramics are typically made from materials such as alumina, zirconia, and calcium phosphate.

In conclusion, ceramics are a diverse and versatile class of materials that have a wide range of applications in various industries and fields. The different types of ceramics offer a range of unique properties that make them suitable for different applications, from traditional pottery to high-performance cutting tools and biomedical implants.

3. List out advantages, disadvantages and application of ceramic material

Ans

Advantages of ceramic materials:

- High strength and hardness
- High wear resistance
- Excellent thermal and electrical insulation properties
- High-temperature stability
- Corrosion resistance
- Biocompatibility for some types of ceramics
- Low thermal expansion coefficient
- Chemically inert
- Non-conductive

Disadvantages of ceramic materials:

- Brittle and susceptible to cracking or breaking under impact or stress
- Difficult to shape or form
- High cost of manufacturing and processing
- Limited ductility

Atmiya University Rajkot

- Poor shock resistance
- Limited translucency or transparency

Applications of ceramic materials:

Electronics: Ceramics are used in electronic components such as capacitors, resistors, and piezoelectric sensors.

Aerospace: Ceramics are used in the aerospace industry for their high-temperature stability and corrosion resistance.

Biomedical: Ceramics are used in biomedical applications such as dental implants and bone substitutes.

Energy: Ceramics are used in energy applications such as fuel cells and batteries.

Chemical: Ceramics are used in chemical applications such as catalysts and filters.

Automotive: Ceramics are used in automotive applications such as brake pads and engine components.

Construction: Ceramics are used in construction applications such as tiles, bricks, and roofing materials.

In conclusion, ceramic materials have a variety of advantages and disadvantages that make them suitable for a range of applications. Their unique properties make them attractive for use in industries such as electronics, aerospace, biomedical, energy, and construction, among others. However, their brittle nature and high manufacturing costs may limit their use in certain applications.

4. What is composite material? And Classify it.

Ans

- Composite materials are a type of material that is composed of two or more constituent materials with different physical and chemical properties that are combined to form a material with unique properties. The constituent materials are combined in a way that maximizes the desirable properties of each component, resulting in a material with superior performance characteristics.
- Composite materials can be classified into three main categories based on the nature of the constituent materials and their arrangement:
- Polymer matrix composites (PMCs): These composites consist of a polymer matrix reinforced with high-strength fibers or particles, such as carbon fibers, glass fibers, or ceramic particles. The fibers or particles are embedded in the polymer matrix to improve the mechanical properties of the material, such as strength, stiffness, and toughness. PMCs are used in applications such as aerospace components, sporting goods, and automotive parts.
- Metal matrix composites (MMCs): These composites consist of a metal matrix reinforced with high-strength fibers or particles, such as aluminum, magnesium, or titanium reinforced with ceramic or carbon fibers. The fibers or particles are embedded in the metal matrix to improve the mechanical properties of the material, such as strength, stiffness, and wear resistance. MMCs are used in applications such as aerospace components, automotive parts, and sporting goods.
- Ceramic matrix composites (CMCs): These composites consist of a ceramic matrix reinforced with high-strength fibers or particles, such as silicon carbide, aluminum oxide, or carbon fibers. The fibers or particles are embedded in the ceramic matrix to improve the mechanical properties of the material, such as strength, stiffness, and thermal stability.

Atmiya University Rajkot

CMCs are used in applications such as aerospace components, thermal protection systems, and cutting tools.

In conclusion, composite materials are materials that are composed of two or more constituent materials that are combined to form a material with unique properties. The three main categories of composite materials are polymer matrix composites, metal matrix composites, and ceramic matrix composites, each with their own set of advantages and applications.

5. **Explain in detail different properties of composite material.**

Ans

Composite materials are materials that are composed of two or more constituent materials with different physical and chemical properties that are combined to form a material with unique properties. The properties of composite materials depend on several factors, including the type and nature of the constituent materials, their arrangement, and the manufacturing process. In this answer, we will discuss the different properties of composite materials.

- Mechanical properties: Composite materials can exhibit superior mechanical properties, such as strength, stiffness, and toughness, compared to their constituent materials. The mechanical properties depend on the type and nature of the reinforcing fibers or particles, their volume fraction, and the arrangement of the fibers or particles in the matrix. For example, carbon fibers are commonly used to reinforce polymer matrices in aerospace and automotive applications to improve the strength and stiffness of the materials.

- Thermal properties: Composite materials can exhibit excellent thermal properties, such as high-temperature stability and low thermal expansion coefficient, due to the use of high-temperature resistant fibers or particles in the matrix. For example, ceramic fibers or particles can be used to reinforce a ceramic matrix to improve its thermal properties.

- Electrical properties: Composite materials can exhibit excellent electrical properties, such as high electrical conductivity or insulation, depending on the type and nature of the constituent materials. For example, carbon fibers can be used to reinforce a polymer matrix to improve its electrical conductivity.

- Chemical properties: Composite materials can exhibit excellent chemical properties, such as corrosion resistance or chemical inertness, due to the use of chemically resistant fibers or particles in the matrix. For example, glass fibers can be used to reinforce a polymer matrix to improve its corrosion resistance.

- Acoustic properties: Composite materials can exhibit excellent acoustic properties, such as sound absorption or insulation, depending on the type and nature of the constituent materials. For example, natural fibers can be used to reinforce a polymer matrix to improve its acoustic properties.

- Fatigue properties: Composite materials can exhibit excellent fatigue properties, such as resistance to cyclic loading or repeated stress, depending on the type and nature of the

Rajkot

constituent materials. For example, aramid fibers can be used to reinforce a polymer matrix to improve its fatigue properties.

In conclusion, composite materials can exhibit a wide range of properties, including mechanical, thermal, electrical, chemical, acoustic, and fatigue properties. The properties of composite materials depend on several factors, including the type and nature of the constituent materials, their arrangement, and the manufacturing process. Composite materials have many advantages over traditional materials due to their unique properties, which make them suitable for a wide range of applications in industries such as aerospace, automotive, construction, and biomedical.

6. **Explain mechanical behaviour of polymers**

Ans

- Polymers are large molecules made up of repeating units called monomers. The mechanical behavior of polymers is influenced by several factors, including their molecular structure, the arrangement of monomers within the polymer chains, and the conditions under which they are processed and used.
- In general, polymers exhibit viscoelastic behavior, which means that they exhibit both elastic and viscous properties. At low stresses, polymers behave elastically, meaning they will return to their original shape after being deformed. However, at higher stresses, polymers exhibit viscous behavior, meaning they will deform permanently and not return to their original shape.
- The mechanical behavior of polymers is also strongly dependent on the temperature, with the glass transition temperature (Tg) being a key characteristic. Below the Tg, polymers are in a glassy state and behave in a brittle manner. Above the Tg, polymers become rubbery and more ductile, meaning they can stretch without breaking.
- The molecular weight of polymers also affects their mechanical behavior. Higher molecular weight polymers tend to exhibit greater stiffness and strength, while lower molecular weight polymers tend to be more flexible and have better elongation properties.

  Polymers can also undergo various types of deformation, including creep (slow deformation under constant load), stress relaxation (decrease in stress over time under constant deformation), and fatigue (failure of a material under cyclic loading). Understanding the mechanical behavior of polymers is important in designing polymer-based products and materials that can withstand specific types and levels of stress and strain without failure.

7. **Explain synthesis and processing of polymer material**

Ans

The synthesis and processing of polymer materials involve several steps, which vary depending on the type of polymer being produced. In general, the process involves the following steps:

- Monomer synthesis: The first step in polymer synthesis is to prepare the monomers, which are the building blocks of polymers. Monomers can be synthesized from petrochemicals, biomass, or other sources.
- Polymerization: The monomers are then polymerized to form long chains of repeating units. Polymerization can be carried out through several methods such as radical

Rajkot

polymerization, anionic polymerization, cationic polymerization, and condensation polymerization.

- Processing: After the polymerization, the resulting polymer is typically in the form of a powder or a viscous liquid. The polymer must be processed to give it the desired shape and properties. Processing techniques include injection molding, extrusion, blow molding, casting, and thermoforming.
- Additives: In addition to the polymer itself, additives such as plasticizers, stabilizers, pigments, and flame retardants may be added to enhance the properties of the polymer.
- Finishing: Finally, the polymer is finished by cutting, polishing, or coating to meet the specific requirements of the application.
- Polymer materials can be produced on a large scale through industrial processes or on a smaller scale in a laboratory setting. The synthesis and processing of polymer materials require careful control of temperature, pressure, and other variables to ensure that the resulting material has the desired properties. Advances in polymer chemistry and processing technology have led to the development of a wide range of polymers with unique properties that make them suitable for a variety of applications in industries such as automotive, packaging, construction, and healthcare.

8. how particle reinforced composites are made?

Ans

Particle-reinforced composites are a type of composite material in which small particles are added to a matrix material to enhance its mechanical properties. The particles can be made of materials such as metals, ceramics, or polymers, and the matrix material is typically a polymer or a metal.

The process of making particle-reinforced composites involves several steps:

- Particle preparation: The first step is to prepare the particles. The particles can be synthesized through a variety of methods such as powder metallurgy, sol-gel processing, or chemical vapor deposition. The particle size, shape, and distribution must be carefully controlled to achieve the desired properties in the final composite.

- Mixing: The particles are then mixed with the matrix material using a variety of techniques such as melt mixing, solution mixing, or powder blending. The mixing process must be carefully controlled to ensure that the particles are evenly distributed throughout the matrix material.

- Processing: The mixed composite material is then processed into the desired shape using techniques such as injection molding, extrusion, or compression molding. The processing conditions such as temperature, pressure, and time must be carefully controlled to ensure that the particles are uniformly dispersed and that the resulting composite has the desired properties.

- Post-processing: After processing, the composite material may undergo additional treatments such as annealing, curing, or surface modification to further enhance its properties.

Atmiya University Rajkot

- The resulting particle-reinforced composite material has improved mechanical properties such as increased strength, stiffness, and toughness compared to the matrix material alone. These materials are widely used in industries such as aerospace, automotive, and electronics, where high-performance materials are required. The particle size, shape, and distribution, as well as the choice of matrix material, can be tailored to meet the specific requirements of the application.

9. how fibre reinforced composites are made?

Ans

Fiber-reinforced composites are a type of composite material in which fibers, typically made of glass, carbon, or aramid, are added to a matrix material, which is usually a polymer, to enhance its mechanical properties. The process of making fiber-reinforced composites involves several steps:

- Fiber preparation: The first step is to prepare the fibers. The fibers are typically supplied in the form of a continuous strand or a woven fabric. The fibers are then cut to the desired length and treated with a sizing agent to improve adhesion to the matrix material.

- Matrix material preparation: The matrix material is prepared separately, usually by mixing a polymer resin with a curing agent. The mixing process must be carefully controlled to ensure that the resin and curing agent are evenly distributed.

- Layup: The fibers are then laid up in the desired orientation and shape. The layup can be done by hand or by using automated equipment. The fibers are then impregnated with the matrix material, which is typically done by vacuum-assisted resin transfer molding (VARTM) or by resin infusion. The impregnated fibers are then compacted to remove air pockets and ensure good adhesion between the fibers and matrix material.

- Curing: The composite material is then cured, which involves heating the material to a specific temperature and holding it for a specific amount of time. The curing process causes the resin to crosslink and harden, bonding the fibers together and creating a rigid, durable material.

- Post-processing: After curing, the composite material may undergo additional treatments such as sanding, polishing, or coating to improve its surface finish or to protect it from the environment.

The resulting fiber-reinforced composite material has excellent strength and stiffness-to-weight ratios, making it ideal for applications where high-performance materials are required, such as in aerospace, automotive, and sporting goods. The fiber orientation, type of matrix material, and fiber volume fraction can be tailored to meet the specific requirements of the application.

10. Explain structural composites with its application in different field.

Ans

Structural composites are composite materials that are designed and engineered to provide specific structural properties, such as high strength, stiffness, and toughness. These materials

Atmiya University Rajkot

typically consist of a reinforcing phase, such as fibers, and a matrix phase, such as a polymer or metal, that work together to provide superior mechanical properties compared to traditional materials.

The most commonly used reinforcing materials in structural composites are fibers made of glass, carbon, or aramid. These fibers are typically very strong and stiff and are capable of withstanding high loads and stresses. The matrix material is chosen to provide good adhesion to the fibers and to transfer loads between the fibers.

The process of manufacturing structural composites involves several steps:

Fiber preparation: The fibers are prepared by cutting them to the desired length and treating them with a sizing agent to improve adhesion to the matrix material.

Matrix material preparation: The matrix material is prepared separately, usually by mixing a polymer resin with a curing agent. The mixing process must be carefully controlled to ensure that the resin and curing agent are evenly distributed.

Layup: The fibers are then laid up in the desired orientation and shape. The layup can be done by hand or by using automated equipment. The fibers are then impregnated with the matrix material, which is typically done by vacuum-assisted resin transfer molding (VARTM) or by resin infusion. The impregnated fibers are then compacted to remove air pockets and ensure good adhesion between the fibers and matrix material.

Curing: The composite material is then cured, which involves heating the material to a specific temperature and holding it for a specific amount of time. The curing process causes the resin to crosslink and harden, bonding the fibers together and creating a rigid, durable material.

Post-processing: After curing, the composite material may undergo additional treatments such as sanding, polishing, or coating to improve its surface finish or to protect it from the environment.
Structural composites are materials made by combining two or more materials to produce a new material that has superior properties compared to the individual components. They are designed and engineered to provide specific structural properties, such as high strength, stiffness, and toughness.

The most common reinforcing materials used in structural composites are fibers made of glass, carbon, or aramid, which are strong and stiff and can withstand high loads and stresses. The matrix material is chosen to provide good adhesion to the fibers and to transfer loads between the fibers.

Applications of structural composites in different fields are as follows:

Aerospace: Structural composites are extensively used in aerospace applications, such as aircraft structures, wings, and fuselages, where high strength-to-weight ratios are required.

Atmiya University Rajkot

The use of composites in aerospace results in significant weight savings, which translates to improved fuel efficiency and reduced operating costs.

Automotive: Structural composites are used in the automotive industry to make lightweight and durable components, such as body panels, suspension parts, and engine components. The use of composites in automotive reduces vehicle weight, resulting in improved fuel efficiency and reduced emissions.

Marine: Structural composites are used in the marine industry to make boats, yachts, and other watercraft. Composites are corrosion-resistant and provide high strength and stiffness, making them ideal for use in marine environments.

Construction: Structural composites are used in construction for building bridges, towers, and other structures. Composites are lightweight and can be used to replace traditional materials such as steel and concrete, resulting in reduced construction costs and improved durability.

Sports equipment: Structural composites are used to make high-performance sports equipment such as golf club shafts, tennis rackets, and bicycle frames. The use of composites in sports equipment results in improved performance and durability compared to traditional materials.

In conclusion, structural composites are versatile materials that can be tailored to meet specific requirements and have numerous applications in various fields, including aerospace, automotive, marine, construction, and sports equipment.

Atmiya University
Rajkot

Unit 2
Fracture Behaviour

1. Explain Stress–Strain Relationships and its behavior

Ans

Stress-strain relationships describe how a material responds to an applied force, or stress. The behavior of a material under stress is determined by its inherent mechanical properties, such as its elasticity, plasticity, and strength. The stress-strain relationship is typically represented by a graph of stress (force per unit area) on the y-axis and strain (change in length per unit length) on the x-axis.

The behavior of a material under stress depends on its deformation characteristics. When a force is applied to a material, it may deform elastically, meaning that it will return to its original shape when the force is removed. Alternatively, it may deform plastically, meaning that it will permanently deform. If the force applied is greater than the material's strength, it will ultimately fail and fracture.

The shape of the stress-strain curve reflects the deformation characteristics of the material. The curve can be divided into three regions: the elastic region, the plastic region, and the fracture region. In the elastic region, the material deforms elastically, meaning that it returns to its original shape when the stress is removed. In the plastic region, the material deforms plastically, meaning that it does not return to its original shape when the stress is removed. In the fracture region, the material fails and fractures.

The slope of the stress-strain curve in the elastic region is known as the elastic modulus or Young's modulus. This is a measure of the material's stiffness or resistance to deformation. The area under the stress-strain curve in the plastic region represents the energy required to deform the material.

The behavior of a material under stress can be predicted and controlled by understanding its stress-strain relationship. Engineers use this knowledge to design structures and materials that can withstand specific stresses and strains without failing or deforming beyond acceptable limits.

2. Describe elastic and plastic deformation.

Ans

Elastic deformation is a type of deformation that occurs in a material when a force is applied, but the material returns to its original shape when the force is removed. In other words, the material deforms elastically within a certain range of stress or force, but it can still recover its original shape and size once the force is removed. This occurs because elastic deformation is caused by the stretching or compression of the material's atomic or molecular bonds, which are able to return to their original state once the applied force is removed.

Plastic deformation, on the other hand, occurs when a material is deformed beyond its elastic limit, and it is not able to return to its original shape when the force is removed. In this case, the material undergoes permanent changes in shape or size, and its atomic or molecular bonds are broken or rearranged irreversibly. Plastic deformation can occur through processes such

Atmiya University Rajkot

as slip, where dislocations move through the material, or twinning, where atomic planes slide past each other.

The ability of a material to undergo elastic or plastic deformation is determined by its mechanical properties, such as its modulus of elasticity (which determines its stiffness), yield strength (which determines the stress at which plastic deformation begins), and ultimate strength (which determines the stress at which the material fractures or breaks).

Understanding elastic and plastic deformation is important in materials science and engineering, as it allows for the design of materials and structures that can withstand specific types and amounts of stress without deforming or failing beyond acceptable limits.

3. Explain three dimensional states of stress and strain.

Ans

Three-dimensional states of stress and strain are those in which the stress or strain is applied in three different directions. In such cases, the material is subjected to a complex state of stress or strain, which is typically represented using a 3D coordinate system.

There are three main types of three-dimensional states of stress and strain:

Tensile stress/strain: This occurs when the material is pulled in three different directions, causing it to stretch or elongate. In this case, the stress is called tensile stress, and the strain is called tensile strain. Tensile stress is positive, while tensile strain is typically expressed as a percentage increase in length.

Compressive stress/strain: This occurs when the material is compressed or squeezed in three different directions, causing it to shrink or shorten. In this case, the stress is called compressive stress, and the strain is called compressive strain. Compressive stress is negative, while compressive strain is typically expressed as a percentage decrease in length.

Shear stress/strain: This occurs when the material is subjected to forces that cause it to twist or deform along its planes of weakness. In this case, the stress is called shear stress, and the strain is called shear strain. Shear stress is typically expressed in units of force per unit area, while shear strain is typically expressed as an angle of deformation.

Understanding the three-dimensional states of stress and strain is important in materials science and engineering, as it allows for the design of materials and structures that can withstand complex and dynamic loads without failing or deforming beyond acceptable limits.

4. What are the general forms of failure criteria?

Ans

Failure criteria are mathematical expressions or equations that describe the conditions under which a material will fail or fracture. There are several different general forms of failure criteria, including:

Maximum stress theory: This theory states that failure occurs when the maximum normal stress in a material reaches a critical value. The critical value is determined by the material's strength properties and can vary depending on the loading conditions.

Atmiya University Rajkot

Maximum strain theory: This theory states that failure occurs when the maximum strain in a material reaches a critical value. The critical value is determined by the material's ductility properties and can vary depending on the loading conditions.

Shear stress theory: This theory states that failure occurs when the maximum shear stress in a material reaches a critical value. The critical value is determined by the material's shear strength properties and can vary depending on the loading conditions.

Distortion energy theory: This theory, also known as von Mises criterion, states that failure occurs when the distortion energy in a material reaches a critical value. Distortion energy is a combination of the normal and shear stresses in a material and is based on the principle that a material will fail when the deformation energy exceeds the amount of energy that can be absorbed without failure.

Mohr's theory: This theory involves the graphical representation of stress on a two-dimensional plot called the Mohr's circle. The critical value for failure is determined by the intersection of the Mohr's circle with a failure envelope, which represents the strength properties of the material.

Different failure criteria may be applicable to different materials and loading conditions, and their use depends on the specific engineering application and the material properties involved. The selection of an appropriate failure criterion is important in ensuring the safe and reliable design of structures and materials.

5. Explain Maximum Normal Stress Fracture Criterion Maximum Shear Stress Yield Criterion. Differentiate them

Ans

Maximum Normal Stress Fracture Criterion

The maximum normal stress fracture criterion is a classical approach used to predict the failure of materials under different loading conditions, such as tension or compression. It is based on the assumption that materials fail when the maximum normal stress in the material reaches a critical value.

The maximum normal stress fracture criterion is typically applied to materials that are brittle or exhibit limited ductility, such as ceramics or glass. The criterion assumes that the material will fail when the maximum normal stress exceeds the tensile or compressive strength of the material, which can be determined through tensile or compressive tests.

Mathematically, the maximum normal stress fracture criterion can be expressed as:

$\sigma_{max} >= \sigma_t$ for tension or $\sigma_{max} <= -\sigma_c$ for compression

Where σ_{max} is the maximum normal stress, σ_t is the tensile strength of the material, and σ_c is the compressive strength of the material.

Atmiya University Rajkot

The criterion suggests that materials will fail in tension when the maximum normal stress in the material exceeds the tensile strength, and will fail in compression when the maximum normal stress in the material exceeds the compressive strength. The criterion assumes that the material will fail in a brittle manner, without significant deformation or plasticity.

Maximum Shear Stress Yield Criterion

The maximum shear stress yield criterion is a failure criterion that is commonly used to predict the yield and failure of ductile materials under complex loading conditions, such as torsion, bending or combined stresses. This criterion is based on the assumption that materials yield and fail when the maximum shear stress in the material exceeds a critical value.

The maximum shear stress yield criterion is often used to design structures and components made of ductile materials such as metals, polymers and composites. Unlike the maximum normal stress fracture criterion, which applies to brittle materials, the maximum shear stress yield criterion assumes that materials will undergo plastic deformation prior to failure.

Mathematically, the maximum shear stress yield criterion can be expressed as:

$\tau_{max} >= \sigma_{yield} / 2$

Where τ_{max} is the maximum shear stress and σ_{yield} is the yield strength of the material.

The criterion suggests that a material will yield and undergo plastic deformation when the maximum shear stress in the material exceeds half of the yield strength of the material. Failure occurs when the deformation and stresses exceed the material's capacity to continue plastic deformation, leading to the formation and propagation of a crack or fracture.

The maximum shear stress yield criterion can be used to predict the behavior of materials under complex loading conditions that involve multiple stresses acting on a material. It is an important tool for designing safe and reliable structures and components made of ductile materials. However, like all failure criteria, it has its limitations and assumptions, and the selection of an appropriate criterion depends on the specific material and loading conditions involved.

Difference

The maximum normal stress fracture criterion is one of several different failure criteria that can be used to predict the behavior of materials under different loading conditions. The selection of an appropriate criterion depends on the specific material and loading conditions involved.

The maximum normal stress fracture criterion and the maximum shear stress yield criterion are two different approaches used to predict the failure of materials under different loading conditions. The key differences between these criteria are:

Atmiya University Rajkot

Definition: The maximum normal stress fracture criterion is based on the maximum normal stress in a material, while the maximum shear stress yield criterion is based on the maximum shear stress in a material.

Failure mode: The maximum normal stress fracture criterion predicts the failure of materials in tension or compression, while the maximum shear stress yield criterion predicts the failure of materials in shear.

Material behavior: The maximum normal stress fracture criterion assumes that materials fail in tension when the maximum normal stress reaches a critical value, while the maximum shear stress yield criterion assumes that materials yield and fail when the maximum shear stress exceeds a critical value.

Assumptions: The maximum normal stress fracture criterion assumes that materials are isotropic and homogeneous, while the maximum shear stress yield criterion assumes that materials are perfectly plastic and follow the Coulomb-Mohr yield criterion.

In summary, the maximum normal stress fracture criterion is a classical approach that predicts the failure of materials in tension or compression based on the maximum normal stress, while the maximum shear stress yield criterion predicts the failure of materials in shear based on the maximum shear stress. Both criteria have limitations and assumptions, and the selection of an appropriate criterion depends on the specific material and loading conditions involved.

Atmiya University
Rajkot

1. State and derive Pascal's law with usual notations. States its applications.

OR

State and prove Pascal's law with usual notations.

Pascal's law: "Pressure or Intensity of pressure at a point in a static mass of fluid is equal in all directions."

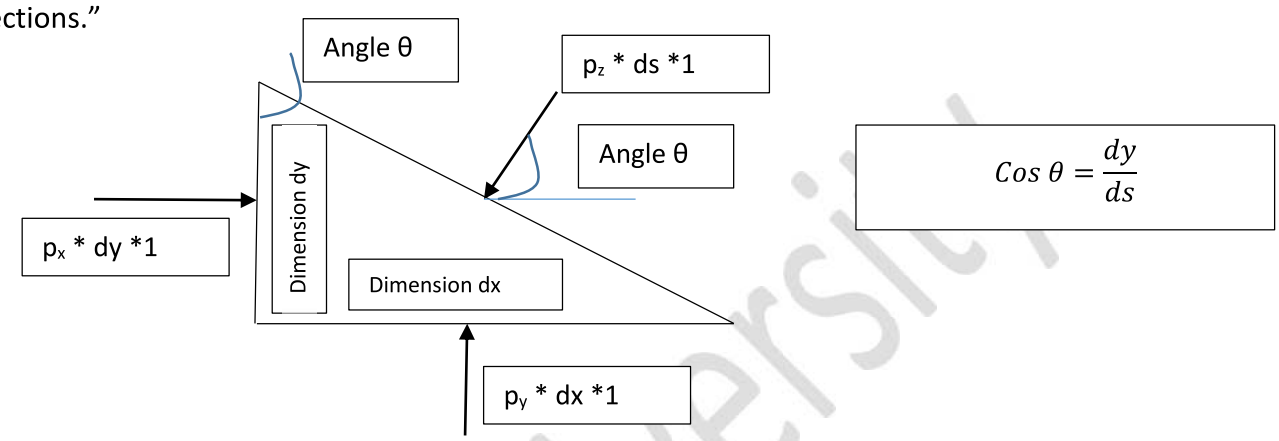

Proof:

Let us consider an arbitrary fluid element of wedge shape corner ABC = θ in fluid mass at rest with three planes around a point shown in Fig. 2.3. Let p_x , p_y and p_z are the intensity of pressure acting on the face in different directions with width of element perpendicular to the plane of paper is unity.

The system of forces should be in equilibrium.

The forces acting on the elements are:

1. Pressure forces normal to the surfaces and,
2. Weight of the fluid element in the vertical direction.

Pressure force on the horizontal face, p_y * dx *1

Pressure force on the vertical face, p_x * dy *1

Pressure force on the slant face, p_z * ds *1

$$\text{Weight of the element} = W = \rho * v * g = \rho g * \frac{1}{2} * dx * dy * 1$$

As dx and dy are small, there product will be very small, hence weight of the element is neglected.

Resolving the forces horizontally,

p_x*dy*1 = p_z *ds*1*cos θ

$$p_x * dy * 1 = p_z * ds * 1 * \frac{dy}{ds}$$

$p_x = p_z$

Resolving the forces vertically,

p_y*dx*1 = p_z *ds*1*sin θ + W

$$p_y * dx * 1 = p_z * ds * 1 * \frac{dx}{ds}$$

$P_y = p_z$

Hence $p_x = p_y = p_z$

Atmiya University Rajkot

2. Explain the following terms

a) Relative Density/ Specific Gravity

Ratio of the density of the fluid to the density of the standard fluid. (Standard fluid: Liquid – Water, Gas – Air)

$$S = \frac{\rho_f}{\rho_{sf}}$$

b) Kinematic Viscosity:

Ratio of the dynamic viscosity of the fluid to the density of the fluid.

$$\nu = \frac{\mu}{\rho}$$

c) Cavitation:

Cavitation is the phenomenon of formation of vapor bubbles of a flowing liquid in a region where the pressure of the liquid falls below the vapor pressure and sudden collapsing of these vapor bubbles in a region of higher pressure.

d) Vapour Pressure:

Vapour pressure can be defined as pressure formed by the vapor of the liquid (or solid) over the surface of the liquid. This pressure is formed in a thermodynamic equilibrium state in a closed container at a certain temperature. Liquid's evaporation rate is identified by the equilibrium vapor pressure.

e) Continuum:

It is necessary to consider that the actual molecular structure is replaced by hypothetical continuous medium, called the continuum.

f) Compressibility:

Compressibility is reciprocal of the bulk modulus which is defined as the ratio of compressive stress (increase in pressure) to volumetric strain.

$$B = \frac{1}{K}$$

$$K = \frac{dp}{-\frac{dv}{v}}$$

Atmiya University Rajkot

g) Capillary Effect (Meniscus Effect)

Capillarity is defined as a phenomenon of rise or fall of s liquid surface in a small tube relative to the adjacent general level of liquid when tube is held vertically in the liquid.

h) Newton's Law of Viscosity:

Its states that the shear stress (τ) on a fluid element layer is directly proportional to the rate of shear strain.
The constant of proportionality is called the co-efficient of viscosity.
Mathematically,

$$\tau = \mu \frac{du}{dy}$$

i) Viscosity:

Viscosity is defined as the property of fluid which offers resistance to the movement of one layer of fluid over another adjacent layer of fluid.

$$\tau = \mu \frac{du}{dy}$$

μ = Viscosity or Dynamic Viscosity or Co-efficient of dynamic viscosity
Unit: N.s/ m^2 or Pascal*second or kg/ (m*s)

j) Surface Tension:

Surface tension is defined as the tensile force acting on the surface of a liquid in contact with a gas or on the surface between two immiscible liquid such that the contact surface behaves like membrane under tension.
σ = Force/ Unit Length
Unit: N/ m

k) Density/ Mass density/ Specific mass:

Ratio of the mass of the fluid to its volume.

$$\rho = \frac{m}{V}$$

Atmiya University
Atmiya University Rajkot

3. **Derive expressions for total pressure and centre of pressure for vertically immersed surface.**
   OR
   Define total pressure and centre of pressure. Derive expression of total pressure force and center of pressure for vertical plane surface remains submerged in liquid.

Total pressure (F)
Total pressure is defined as the force exerted by a static fluid on a surface either plane or curved when the fluid comes in contact with the surface and this force always normal to the surface.
Centre of pressure (h*) – Measured from Free Liquid Surface (FLS)
Centre of pressure is defined as the point of application of the total pressure on the surface.

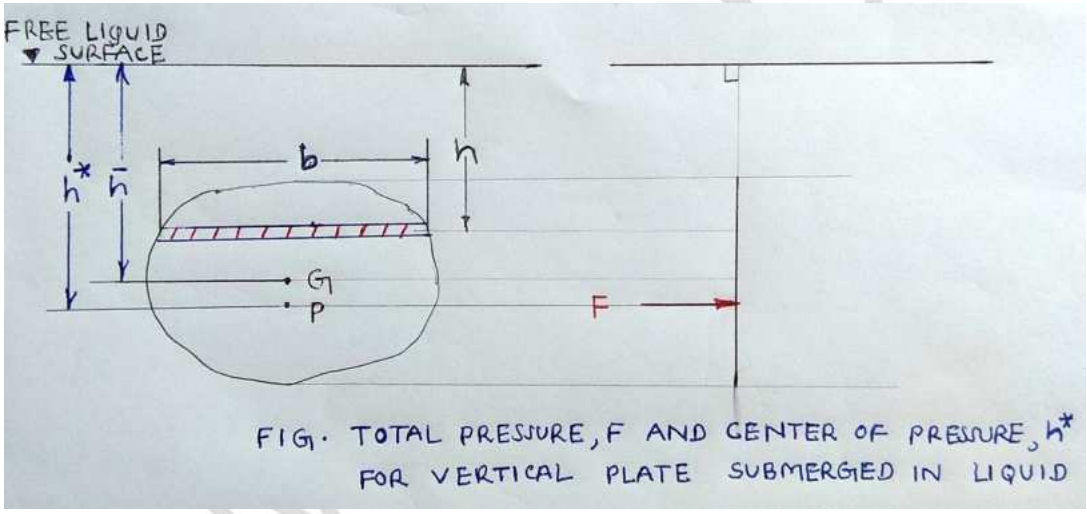

FIG. TOTAL PRESSURE, F AND CENTER OF PRESSURE, h* FOR VERTICAL PLATE SUBMERGED IN LIQUID

Total pressure (F):

Assuming elementary strip at 'h' distance from FLS and having thickness 'dh' and width 'b'
Pressure on the strip
p = ρgh
Force on the strip
df = ρgh * b*dh
Total pressure,
$F = \int \rho gh * b * dh$
$F = \int \rho gh * dA$
$F = \rho g \int h * dA$ Where $\int h * dA = 1st\ Moment\ of\ Area\ @\ FLS = A\bar{h}$
$F = \rho g A\bar{h}$

Atmiya University Rajkot

Centre of pressure (h*) – Measured from Free Liquid Surface (FLS)

Centre of pressure is calculated by using the principle of moments which states that the moment of the resultant force about an axis is equal to the sum of moments of the components about the same axis.

$$\boxed{\boldsymbol{F * h^* = \int dF * h}}$$

Hence moment of the force dF about free surface of the liquid,
$dF * h = \rho g h * b * dh * h = \rho g h^2 dA$

Sum of the moment about FLS,
$= \int dF * h$
$= \int \rho g h^2 * dA$
$= \rho g \int h^2 * dA, \int h^2 * dA = 2nd\ Moment\ of\ Area\ or\ Moment\ of\ Inertia\ @\ FLS = I_o$
$= \rho g I_o$

The moment of the resultant force about an FLS,
$= F * h^*$
$= \rho g A\bar{h} * h^*$

Equating,
$\rho g A\bar{h} * h^* = \rho g I_o$

$h^* = \frac{I_o}{A\bar{h}}$, *Parallel Axis Theorem:* $I_o = I_G + A\bar{h}^2$

$h^* = \frac{I_G + A\bar{h}^2}{A\bar{h}}$

$$\boxed{h^* = \frac{I_G}{A\bar{h}} + \bar{h}}$$

Comment: Center of Pressure is always below center of Gravity for the vertical plate submerged in the liquid.

Atmiya University

4. **Show that the distance between the meta-centre and centre of buoyancy is given by**

$$GM = \frac{I}{\forall} - BG$$

"Meta-Centre is defined as the point about which a body starts oscillating or floating when the body is tilted by a small angle."

The Meta-centre may also be defined as "the point at which the line of action of the force of buoyancy will meet the normal axis of the body when the body is given a small angular displacement."

"The distance between Meta-Centre (M) and Centre of Gravity (G) is called Meta-Centric height (GM)"

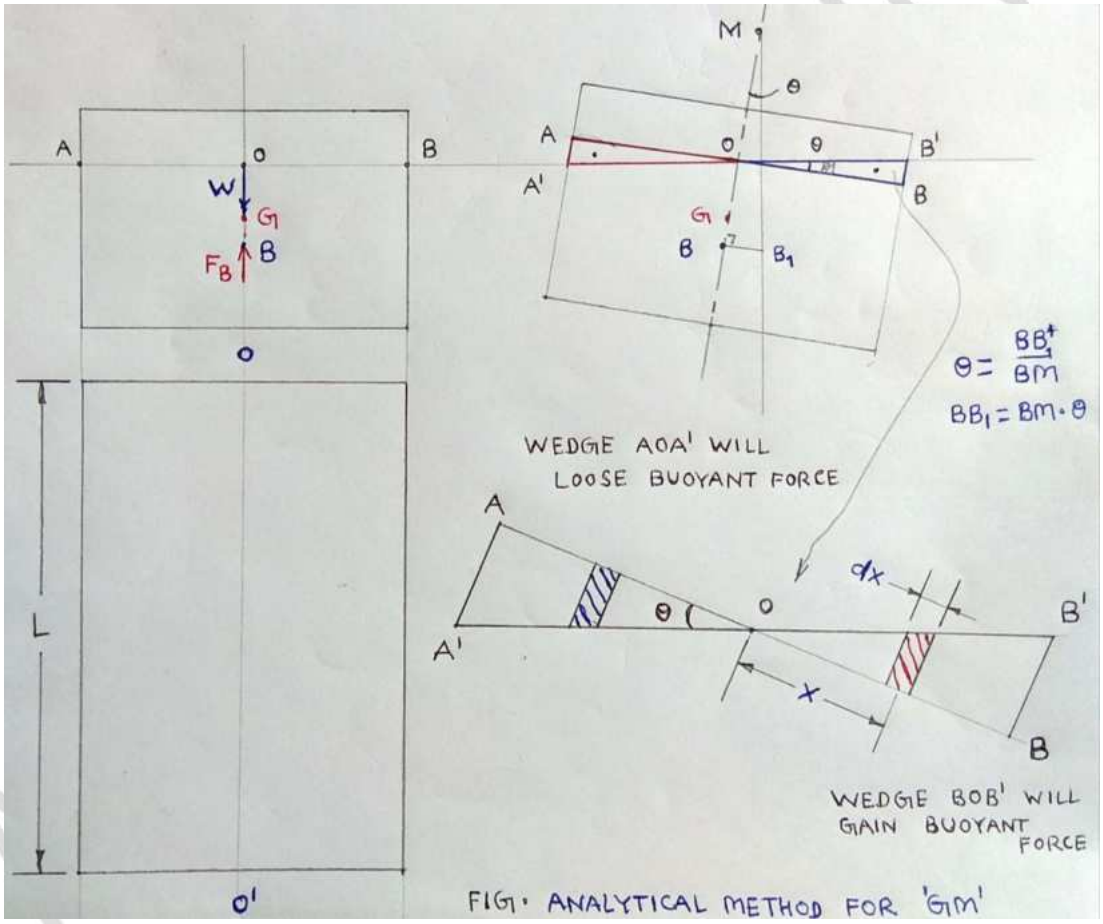

FIG. ANALYTICAL METHOD FOR 'GM'

Assuming Elementary Strip (Toward left of the origin in wedge BOB') at 'x' distance from 'O' having thickness 'dx'

$Height\ of\ the\ strip = x * \theta$
$Area\ of\ the\ strip = x * \theta * dx$
$Volume\ of\ the\ strip = x * \theta * dx * L$
$Weight\ of\ the\ strip = x\,\theta L dx * \rho g$

Atmiya University Rajkot

We can also assume elementary strip toward right of the origin in wedge AOA' at 'x' distance from 'O' having thickness 'dx'

Moment of the couple for strips

$= Weight\ of\ the\ strip * distance$
$= \rho g x \theta L dx * (x + x)$
$= 2\rho g x^2 \theta L dx$

Moment of the couple for wedges

$= \int 2\rho g x^2 \theta L dx$
$= \rho g \theta * 2\int x^2 dA\ \ , 2\int x^2 dA\ = Second\ Moment\ of\ Inertia\ @\ OO'i.e.\ plan = I$
$= \rho g \theta * I$ Eq. (1)

Due to this Moment of couple, Force of Buoyancy (F_B – Initially acting from B changes to B_1)

Force of Buoyancy
= Weight of liquid displaced
= ρ∀g, Where ∀ = Volume of liquid displaced

Resultant Moment of Couple = F_B * BB_1 = F_B * BM * θ = ρ∀g * BM * θ Eq. (2)

Equating,

$\rho\forall g * BM * \theta = \rho g \theta * I$
$BM = \frac{I}{\forall}$
$BG + GM = \frac{I}{\forall}$
$$\boxed{GM = \frac{I}{\forall} - BG}$$

Atmiya University

Atmiya University
Faculty of Engineering & Technology
Department of Mechanical Engineering
B.Tech. 8th Semester

Industry 5.0 - Important Questions with Answers

Unit 1

1. **Write Need, scope, importance Internet of things**

Ans:

The Internet of Things (IoT) refers to a network of physical devices, vehicles, home appliances, and other items embedded with electronics, software, sensors, and network connectivity, allowing them to collect and exchange data.

Need: The need for IoT arises from the increasing demand for connected devices that can provide real-time information and automate various processes. With the IoT, devices can communicate with each other, enabling a new level of automation, efficiency, and convenience in various industries and everyday life.

Scope: The scope of IoT is vast, with applications ranging from healthcare and manufacturing to agriculture, transportation, and smart homes. IoT can be used to monitor, control, and optimize various processes, and to collect and analyze large amounts of data.

Importance: IoT is important because it has the potential to improve efficiency, reduce costs, and enhance quality of life. For example, in healthcare, IoT can be used to monitor patients and provide real-time information to healthcare providers. In manufacturing, IoT can be used to optimize production processes and reduce waste. In agriculture, IoT can be used to monitor crops and optimize irrigation and fertilization.

The IoT is a rapidly growing field with new applications and innovations emerging all the time. The importance of IoT lies in its ability to revolutionize the way we live, work, and interact with the world around us. By leveraging the power of connected devices and data, IoT has the potential to transform our world in ways we can only imagine.

2. **Explain Need, scope, importance of factory of things (FOT).**

Ans:

The Factory of Things (FoT) refers to a manufacturing environment that leverages the Internet of Things (IoT) to create a connected and data-driven production system.

Need: The need for FoT arises from the increasing demand for smart and connected manufacturing processes that can provide real-time data, improve efficiency, and increase

Atmiya University Rajkot

productivity. With the FoT, manufacturers can collect data from various sources and use this information to optimize their processes and make informed decisions.

Scope: The scope of FoT extends to a wide range of manufacturing environments, including factories, workshops, and production lines. FoT can be used to monitor and control various aspects of the manufacturing process, such as machinery, production lines, and supply chains.

Importance: FoT is important because it has the potential to transform the manufacturing industry by improving efficiency, reducing costs, and enhancing the quality of products. For example, FoT can be used to monitor machinery and predict maintenance needs, reducing downtime and increasing productivity. FoT can also be used to optimize production processes and reduce waste, which can lead to cost savings and increased profitability.

In conclusion, FoT has the potential to revolutionize the manufacturing industry by providing a connected, data-driven, and smart environment that can enhance efficiency, productivity, and quality. As the FoT continues to evolve, it will play an increasingly important role in shaping the future of manufacturing and driving innovation in the industry.

3. **Write applications of IoT & FoT**

Ans:

The Internet of Things (IoT) and the Factory of Things (FoT) have numerous applications across various industries and domains, some of which include:

Healthcare: IoT can be used to monitor patients and provide real-time information to healthcare providers, enabling remote monitoring and improving patient outcomes.

Manufacturing: FoT can be used to optimize production processes, reduce waste, and improve the efficiency of machinery. FoT can also be used to monitor and predict maintenance needs, reducing downtime and increasing productivity.

Agriculture: IoT can be used to monitor crops and optimize irrigation and fertilization, improving crop yields and reducing waste.

Transportation: IoT can be used to track and monitor vehicles, optimizing routes and reducing fuel consumption. IoT can also be used to improve road safety and reduce accidents by monitoring road conditions and traffic flow.

Smart homes: IoT can be used to control and automate various aspects of a home, such as lighting, heating, and security.

Energy: IoT can be used to monitor and optimize energy consumption, reducing waste and improving sustainability. IoT can also be used to monitor and manage renewable energy sources, such as wind and solar power.

Retail: IoT can be used to improve the shopping experience, such as by tracking customers and providing personalized recommendations. IoT can also be used to optimize inventory management and reduce waste.

Atmiya University Rajkot

These are just a few examples of the many applications of IoT and FoT. As technology continues to advance, new applications and innovations are emerging all the time, making IoT and FoT an increasingly important and rapidly growing field.

4. **Explain in detail1.. Big Data 2.Data Mining 3.Data Warehousing**

Ans

1. Big Data refers to the massive volume of structured and unstructured data generated by individuals, organizations, and various digital devices and platforms. This data is so large and complex that it can't be processed or analyzed by traditional data management tools.
   For example, consider a large e-commerce company that collects data on millions of customers, including their online browsing and purchasing behavior. This data is generated from multiple sources, such as the company's website, mobile apps, and social media platforms, and it's growing at an unprecedented rate. The company can use Big Data technologies, such as Hadoop or Spark, to process and analyze this vast amount of data to gain insights into customer preferences and behavior, which can inform business decisions, such as product development and marketing strategies.
2. Data Mining is the process of discovering patterns, relationships, and insights in large datasets. It involves the use of statistical and machine learning algorithms to extract useful information and knowledge from raw data.
   Using the previous example, the e-commerce company can use data mining techniques to identify patterns and relationships in its customer data. For instance, the company may use association rule mining to identify the items that are frequently purchased together by its customers, which can inform product placement and packaging decisions. Alternatively, the company may use clustering algorithms to group customers into segments based on their purchasing behavior, which can help with targeted marketing campaigns.
3. Data Warehousing is a technique for centralizing, organizing, and storing large amounts of data in a single, easily accessible location. The data stored in a data warehouse is typically used for business intelligence and analytics purposes, as it provides a single, consolidated view of all relevant data from multiple sources.
   In this example, the e-commerce company can use a data warehouse to store its customer data in a central location, where it can be easily accessed and analyzed. The company may use an Extract, Transform, Load (ETL) process to transfer data from its various sources into the data warehouse, where it can be cleaned, transformed, and structured for analysis. The data in the warehouse can then be used for business intelligence and analytics purposes, such as generating reports and dashboards that provide insights into customer behavior, sales trends, and more.
5. Explain 6R principle with suitable examples
   Ans:
   The 6R principle is a framework used to guide the management and handling of big data, and it stands for the following 6 steps:

Atmiya University Rajkot

Right Time: Ensure that the data is captured, processed, and analyzed at the right time. For example, real-time streaming data from sensors or social media platforms needs to be processed and analyzed immediately to be useful.

Right Place: Store data in the appropriate location, taking into account factors such as data privacy, security, and accessibility. For example, sensitive financial data may need to be stored in a secure data center, while publicly available data can be stored in the cloud.

Right Format: Ensure that data is stored in the right format for the intended use. For example, image data may need to be stored in a format such as JPEG, while text data may need to be stored as a CSV file.

Right Quality: Ensure that data is of high quality, with minimal errors, missing values, and inconsistencies. For example, data may need to be cleaned and validated before it can be analyzed.

Right Reason: Store data for a specific purpose, and only use it for that purpose. For example, data collected for marketing purposes should not be used for employment decisions.

Right Responsibility: Assign responsibility for the management and use of data, and ensure that it is used ethically and in compliance with relevant laws and regulations. For example, the data owner should be responsible for ensuring that the data is used in an appropriate manner, and that its privacy is protected.

By following the 6R principle, organizations can ensure that their big data is managed and used effectively, efficiently, and ethically

6. **Explain the waste prevention methods**

Ans

Waste prevention, also known as "source reduction," is the practice of reducing the amount of waste generated in the first place. Here are several methods for preventing waste:

Reuse: Reusing products, such as containers and packaging, can reduce the amount of waste generated. For example, using refillable water bottles instead of disposable plastic bottles.

Reduce: Reducing the amount of resources used, such as energy and water, can also reduce the amount of waste generated. For example, turning off lights and electronics when not in use.

Recycle: Recycling can transform waste into new products, reducing the need for virgin materials. For example, recycling paper, plastics, and metals.

Repair: Repairing broken or damaged items instead of replacing them can also reduce waste. For example, fixing a bicycle instead of buying a new one.

Atmiya University Rajkot

Redesign: Redesigning products and processes to reduce waste can be an effective way to prevent waste. For example, designing packaging that is more easily recyclable or biodegradable.

Reduce Overproduction: Overproduction is a major source of waste, and reducing it can help to prevent waste. For example, producing only what is needed, just-in-time, and using lean manufacturing techniques.

By implementing these waste prevention methods, organizations can minimize their waste and reduce their environmental impact.

7. **What is e waste? Explain different methods of prevention of it.**

Ans:

E-waste refers to discarded electronic devices, such as computers, mobile phones, televisions, and other household appliances, that contain toxic materials such as lead, mercury, and cadmium, among others. These materials can be harmful to human health and the environment if not properly disposed of.

Methods of prevention of e-waste include:

Repair and reuse: Encouraging people to repair broken devices, rather than replacing them with new ones, can reduce e-waste.

Recycling: Proper recycling of electronic devices can help prevent e-waste by extracting valuable metals and reducing the amount of toxic materials that enter landfills.

Product design for recyclability: Manufacturers can design products with recyclability in mind, using materials that are easy to recycle and avoiding the use of hazardous substances.

E-waste management laws: Governments can implement laws and regulations that require manufacturers to take responsibility for the disposal of their products at end-of-life.

Awareness and education: Raising awareness about the dangers of e-waste and educating people about responsible disposal methods can help prevent the growth of e-waste.

8. **Write different aspects of Industry 5.0, I4.0.**

Ans:

Industry 5.0 and Industry 4.0 are both terms used to describe the current and future state of industrial production.

Industry 5.0 refers to the integration of advanced technologies, such as artificial intelligence (AI), the Internet of Things (IoT), and 5G networks, into industrial production processes to create a fully connected, data-driven, and autonomous industrial system.

Industry 4.0, also known as the Fourth Industrial Revolution, refers to the integration of advanced technologies, such as automation, big data analytics, and the Internet of Things (IoT), into industrial production processes to create a more efficient, flexible, and responsive manufacturing system.

Some of the key aspects of Industry 5.0 and Industry 4.0 include:

Atmiya University Rajkot

Automation: The use of robots, machine learning, and artificial intelligence to automate repetitive tasks and improve efficiency.

Big data and analytics: The use of data and analytics to gain insights into industrial processes and make data-driven decisions.

Internet of Things (IoT): The use of interconnected devices and sensors to collect and transmit data in real-time.

Cybersecurity: Ensuring the secure transmission of data and the protection of sensitive information in a connected industrial environment.

Augmented Reality and Virtual Reality: The use of AR/VR technology to visualize, simulate, and train workers in industrial processes.

Cloud Computing: The use of cloud computing to store and process large amounts of data and improve collaboration in industrial processes.

Additive Manufacturing (3D Printing): The use of 3D printing to produce complex parts and prototypes directly from digital designs.

Human-Machine Interaction: The integration of humans and machines to work together seamlessly in industrial processes.

Overall, Industry 5.0 and Industry 4.0 aim to create a more intelligent, connected, and sustainable industrial system that leverages advanced technologies to improve efficiency, increase flexibility, and drive innovation.

9. **Write major difference between I4.0 and I5.0**

Ans

Industry 4.0 and Industry 5.0 are both terms used to describe the current and future state of industrial production, but there are some key differences between the two.

Industry 4.0, also known as the Fourth Industrial Revolution, refers to the integration of advanced technologies, such as automation, big data analytics, and the Internet of Things (IoT), into industrial production processes to create a more efficient, flexible, and responsive manufacturing system.

Industry 5.0, on the other hand, refers to the integration of advanced technologies, such as artificial intelligence (AI), the Internet of Things (IoT), and 5G networks, into industrial production processes to create a fully connected, data-driven, and autonomous industrial system.

Some major differences between Industry 4.0 and Industry 5.0 include:

Focus: Industry 4.0 focuses on increasing efficiency, flexibility, and responsiveness in industrial processes, while Industry 5.0 focuses on creating a fully connected, autonomous, and data-driven industrial system.

Technologies: Industry 4.0 primarily leverages technologies such as automation, big data analytics, and the Internet of Things (IoT), while Industry 5.0 leverages advanced technologies such as artificial intelligence (AI), the Internet of Things (IoT), and 5G networks.

Atmiya University Rajkot

Human-Machine Interaction: In Industry 4.0, humans and machines work together seamlessly in industrial processes, while in Industry 5.0, machines have a greater role and human intervention is limited to a certain extent.

Connectivity: Industry 4.0 emphasizes the connectivity of industrial processes and the sharing of data, while Industry 5.0 takes this a step further by creating a fully connected and autonomous industrial system.

Sustainability: Industry 4.0 focuses on creating a more sustainable industrial system, while Industry 5.0 takes this even further by leveraging advanced technologies to create a more environmentally friendly and resource-efficient industrial system.

In conclusion, Industry 5.0 builds upon the principles of Industry 4.0 and represents the next step in the evolution of industrial production, leveraging advanced technologies to create a more connected, autonomous, and sustainable industrial system.

10. Write impact of I4.0 and I5.0 on development of society.

Ans

Industry 4.0 and Industry 5.0 have the potential to greatly impact the development of society in many positive ways. Here are some of the key impacts:

Increased efficiency: By integrating advanced technologies such as automation, big data analytics, and the Internet of Things (IoT), Industry 4.0 and Industry 5.0 can help improve efficiency and reduce waste in industrial processes.

Job creation: The integration of advanced technologies in industrial processes can create new jobs in areas such as data analysis, software development, and robotics engineering.

Economic growth: Industry 4.0 and Industry 5.0 have the potential to drive economic growth by increasing the efficiency and competitiveness of industrial processes and creating new business opportunities.

Improved quality of life: The more efficient and sustainable industrial processes enabled by Industry 4.0 and Industry 5.0 can help improve the quality of life for people by reducing the negative impacts of industrial production on the environment and society.

Personalized products and services: By leveraging big data and analytics, Industry 4.0 and Industry 5.0 can help create personalized products and services that are tailored to individual needs and preferences.

Improved access to products and services: The fully connected and data-driven industrial systems enabled by Industry 5.0 can help improve access to products and services in remote or underserved areas.

Increased innovation: Industry 4.0 and Industry 5.0 can drive innovation by creating new opportunities for research and development and by fostering a culture of continuous improvement in industrial processes.

Overall, Industry 4.0 and Industry 5.0 have the potential to greatly impact the development of society by creating more efficient, sustainable, and innovative industrial processes that can improve the quality of life for people.

11. write advantages of I5.0 in manufacturing.

Atmiya University Rajkot

Ans

Industry 5.0, also known as the Fifth Industrial Revolution, represents a significant advancement in the way industrial production is performed, and it offers many advantages for manufacturing. Here are some of the key advantages:

Increased efficiency: Industry 5.0 leverages advanced technologies such as artificial intelligence (AI), the Internet of Things (IoT), and 5G networks to create a fully connected, data-driven, and autonomous industrial system. This can help increase efficiency and reduce waste in industrial processes.

Improved product quality: The use of advanced technologies and data-driven decision-making in Industry 5.0 can help improve the quality of products and services by reducing errors and ensuring that they meet customer requirements.

Personalized products and services: By leveraging big data and analytics, Industry 5.0 can help create personalized products and services that are tailored to individual needs and preferences, resulting in increased customer satisfaction.

Improved safety: Industry 5.0 leverages advanced technologies such as AI and robotics to perform dangerous or repetitive tasks, reducing the risk of injury to human workers.

Increased sustainability: The more efficient and data-driven industrial processes enabled by Industry 5.0 can help reduce resource consumption and waste, making industrial production more environmentally friendly.

Increased innovation: The integration of advanced technologies in industrial processes can create new opportunities for research and development, driving innovation and continuous improvement.

Cost savings: The increased efficiency and reduced waste in industrial processes enabled by Industry 5.0 can result in cost savings for manufacturers.

In conclusion, Industry 5.0 represents a major step forward in the way industrial production is performed, offering many advantages for manufacturing, including increased efficiency, improved product quality, personalization, improved safety, increased sustainability, increased innovation, and cost savings.

12. What are cobots?explain Benefits of cobots in manufacturing.

Ans

Cobots are collaborative robots that are designed to work alongside human workers in a manufacturing setting. They are often smaller, lighter, and more flexible than traditional industrial robots and can be programmed to perform a wide range of tasks.

Here are some of the key benefits of using cobots in manufacturing:

Improved productivity: Cobots can perform repetitive or dangerous tasks, freeing up human workers to focus on higher-value tasks and improving overall productivity.

Increased safety: Cobots are designed to work safely alongside human workers, reducing the risk of injury in the workplace.

Atmiya University Rajkot

Enhanced flexibility: Cobots can be easily programmed and reconfigured to perform a wide range of tasks, making them well-suited for small-scale and low-volume production.
Reduced costs: Cobots are typically less expensive than traditional industrial robots, making them an affordable solution for small and medium-sized businesses.
Increased efficiency: Cobots can work around the clock, reducing downtime and increasing overall efficiency in the manufacturing process.
Improved product quality: Cobots can perform tasks with a high degree of precision and consistency, resulting in improved product quality.
Skill augmentation: Cobots can help human workers acquire new skills and become more productive by assisting with tasks and training on new processes.
In conclusion, cobots are collaborative robots that offer many benefits for manufacturing, including improved productivity, increased safety, enhanced flexibility, reduced costs, increased efficiency, improved product quality, and skill augmentation.

Unit 2

1. **Write and explain different types of robots.**

Ans

There are several different types of robots, each designed for specific tasks and applications. Here are some of the most common types:

Industrial Robots: These robots are typically used in manufacturing and are designed for tasks such as assembly, welding, painting, and material handling. They are typically large and heavily armored, and they can be programmed to perform complex tasks with a high degree of accuracy and speed.

Service Robots: Service robots are designed to perform tasks that are either too dangerous or too tedious for human workers. Examples include bomb disposal robots, cleaning robots, and robots used for medical procedures.

Domestic Robots: Domestic robots are designed for use in the home and are used for tasks such as vacuuming, cleaning, and assisting with household chores.

Mobile Robots: Mobile robots are designed to move and perform tasks in a variety of environments, including both indoor and outdoor settings. They can be autonomous or remote-controlled and are used for tasks such as inspection, mapping, and surveillance.

Humanoid Robots: Humanoid robots are robots that are designed to look and move like human beings. They are typically used for entertainment, research, and education, but they may also be used in tasks that require human-like dexterity and movement.

Atmiya University Rajkot

Collaborative Robots (Cobots): Cobots are robots that are designed to work alongside human workers in a manufacturing setting. They are typically smaller and more flexible than traditional industrial robots and can be programmed to perform a wide range of tasks.

Underwater Robots: Underwater robots are designed to perform tasks in underwater environments, such as ocean exploration, monitoring marine life, and inspecting ships and offshore oil rigs.

In conclusion, there are many different types of robots, each designed for specific tasks and applications. Some of the most common types include industrial robots, service robots, domestic robots, mobile robots, humanoid robots, collaborative robots (cobots), and underwater robots.

2. **Write and explain different types of grippers and sensors.**

Ans

Grippers and sensors are two essential components of robots, used for manipulating objects and perceiving the environment, respectively.

Here are some of the most common types of grippers:

Pneumatic grippers: These grippers use air pressure to grip and release objects. They are typically used in industrial robots and are known for their high accuracy and repeatability.

Vacuum grippers: These grippers use suction to hold objects in place. They are typically used for handling delicate or fragile objects and are often used in food packaging and handling applications.

Magnetic grippers: These grippers use magnetic fields to hold objects in place. They are typically used for handling ferromagnetic objects, such as metal parts, and are often used in welding and material handling applications.

Mechanical grippers: These grippers use mechanical means, such as jaws, to grip objects. They are typically used for handling a wide range of objects and are often used in assembly and material handling applications.

And here are some of the most common types of sensors:

Optical sensors: These sensors use light to detect objects or measure distances. Examples include cameras and LIDAR sensors.

Force sensors: These sensors measure the forces exerted by robots on their environment or on objects they are manipulating. Examples include load cells and torque sensors.

Touch sensors: These sensors detect the presence of objects or changes in the environment by measuring touch or pressure. Examples include capacitive touch sensors and tactile sensors.

Proximity sensors: These sensors detect the presence of objects without making physical contact. Examples include ultrasound sensors and infrared sensors.

Atmiya University Rajkot

Accelerometer sensors: These sensors measure the acceleration of a robot or its components. They are often used to provide information about the orientation and motion of robots.

In conclusion, grippers and sensors are essential components of robots, used for manipulating objects and perceiving the environment. There are many different types of grippers, including pneumatic grippers, vacuum grippers, magnetic grippers, and mechanical grippers, and there are many different types of sensors, including optical sensors, force sensors, touch sensors, proximity sensors, and accelerometer sensors.

3. **Whats are the the 5 Primary Areas of Robotics**

Ans

The field of robotics is broad and encompasses many different areas of research and application. However, the following are five primary areas of robotics:

Artificial Intelligence and Machine Learning: This area of robotics focuses on the development of intelligent algorithms and systems that enable robots to learn from their environment and make decisions on their own.

Mechanisms and Actuation: This area of robotics focuses on the design and development of the physical components of robots, including their structure, movement, and manipulation capabilities.

Sensors and Perception: This area of robotics focuses on the development of sensors and perception systems that enable robots to perceive and understand their environment.

Control and Navigation: This area of robotics focuses on the design and development of algorithms and systems that enable robots to move, control their movements, and navigate their environment.

Human-Robot Interaction: This area of robotics focuses on the design and development of technologies that enable robots to interact with humans in natural and intuitive ways. This includes the development of user-friendly interfaces, voice and gesture recognition systems, and other technologies that enable robots to understand and respond to human inputs.

These five primary areas of robotics are interrelated and often overlap, and they are constantly evolving as new technologies and applications are developed.

4. **Explain Different Types of Industrial Automation Systems**

Ans

Industrial automation refers to the use of technology and control systems to automate and optimize industrial processes. There are several types of industrial automation systems, including:

Programmable Logic Controllers (PLCs): These are small, computerized systems that are designed to control and automate industrial processes. They are widely used in manufacturing, process control, and other industrial applications.

Atmiya University Rajkot

Distributed Control Systems (DCSs): These are larger, more complex control systems that are used to automate and control industrial processes. They typically consist of a central computer and multiple remote devices connected by a network.

Supervisory Control and Data Acquisition (SCADA) Systems: These systems are used to monitor and control industrial processes from a central location. They typically use a combination of hardware and software to provide real-time information about process conditions and allow operators to make adjustments as needed.

Human-Machine Interfaces (HMIs): These are graphical user interfaces that provide operators with a visual representation of an industrial process. They typically display process data, alarms, and control inputs, allowing operators to easily monitor and control a process.

Robotics: Robotics systems are used in many industrial automation applications, including assembly, material handling, and packaging. They typically consist of a robotic arm, gripper, and control system, and they can be programmed to perform a variety of tasks.

Factory Automation Systems: These are systems that are used to automate and control all aspects of a manufacturing facility, including production, material handling, and quality control.

Building Automation Systems: These systems are used to control and automate the various systems in a building, such as heating, ventilation, air conditioning, lighting, and security.

In conclusion, there are several different types of industrial automation systems, including programmable logic controllers, distributed control systems, supervisory control and data acquisition systems, human-machine interfaces, robotics, factory automation systems, and building automation systems. Each of these systems has unique capabilities and is designed to meet specific industrial automation needs.

5. **Explain application of robots in the automotive industry**

Ans

Industrial automation refers to the use of technology and control systems to automate and optimize industrial processes. There are several types of industrial automation systems, including:

Programmable Logic Controllers (PLCs): These are small, computerized systems that are designed to control and automate industrial processes. They are widely used in manufacturing, process control, and other industrial applications.

Distributed Control Systems (DCSs): These are larger, more complex control systems that are used to automate and control industrial processes. They typically consist of a central computer and multiple remote devices connected by a network.

Atmiya University Rajkot

Supervisory Control and Data Acquisition (SCADA) Systems: These systems are used to monitor and control industrial processes from a central location. They typically use a combination of hardware and software to provide real-time information about process conditions and allow operators to make adjustments as needed.

Human-Machine Interfaces (HMIs): These are graphical user interfaces that provide operators with a visual representation of an industrial process. They typically display process data, alarms, and control inputs, allowing operators to easily monitor and control a process.

Robotics: Robotics systems are used in many industrial automation applications, including assembly, material handling, and packaging. They typically consist of a robotic arm, gripper, and control system, and they can be programmed to perform a variety of tasks.

Factory Automation Systems: These are systems that are used to automate and control all aspects of a manufacturing facility, including production, material handling, and quality control.

Building Automation Systems: These systems are used to control and automate the various systems in a building, such as heating, ventilation, air conditioning, lighting, and security.

In conclusion, there are several different types of industrial automation systems, including programmable logic controllers, distributed control systems, supervisory control and data acquisition systems, human-machine interfaces, robotics, factory automation systems, and building automation systems. Each of these systems has unique capabilities and is designed to meet specific industrial automation needs.

From Unit : 3

1. **Differentiate between additive and subtractive manufacturing processes.**

   Ans

   Additive manufacturing refers to the process of building objects by adding material layer by layer. Examples include 3D printing and stereolithography.

   Subtractive manufacturing, on the other hand, involves removing material from a solid block to create a desired object. Examples include CNC machining, milling, and drilling.

   In short, additive manufacturing adds material while subtractive manufacturing subtracts material.

2. **Define Additive manufacturing process and give its benefits.**

   Ans

   Additive manufacturing is a process of creating objects by adding material layer by layer. It is also known as 3D printing. This process allows for the creation of complex and intricate shapes that would be difficult or impossible to produce using traditional manufacturing methods.

Atmiya University Rajkot

The benefits of additive manufacturing include:
Increased design freedom: Complex and custom shapes can be easily produced with additive manufacturing.
Faster prototyping: Quick and efficient prototyping enables designers to quickly test and iterate on their designs.
Lower waste: Additive manufacturing only uses the material necessary to create the object, reducing waste compared to subtractive methods.
Increased efficiency: Additive manufacturing eliminates the need for tooling, reducing lead times and increasing efficiency.
Cost-effectiveness: The reduced waste and increased efficiency of additive manufacturing can lead to cost savings compared to traditional methods.
Overall, additive manufacturing offers many advantages that make it a valuable tool for product development and manufacturing.

3. **Classify Additive manufacturing process.**

Ans

Additive manufacturing processes can be classified into several categories based on the type of technology used:

1. Fused Deposition Modeling (FDM)
2. Stereolithography (SLA)
3. Selective Laser Sintering (SLS)
4. Directed Energy Deposition (DED)
5. Binder Jetting
6. Material Jetting
7. Sheet Lamination

Each of these categories has its own unique strengths and weaknesses and is used for different applications and materials. For example, FDM is often used for prototyping and is capable of producing parts with a wide range of materials, while SLS is often used for producing functional parts and is capable of producing parts with a high degree of accuracy and repeatability.

It's important to choose the right additive manufacturing process for a specific application based on factors such as desired material properties, accuracy, and production volume

4. **Write down the short note on Fused deposition modeling.**

Ans

Fused Deposition Modeling (FDM) is an additive manufacturing process that involves the use of a heated filament, which is melted and extruded layer by layer to build a three-dimensional object. The filament is melted and deposited in a precise pattern to build the object, which is then cooled and solidified. FDM technology is often used for prototyping and the production of low-volume parts, and it is capable of producing parts with a wide

Atmiya University Rajkot

range of materials, including thermoplastics, composites, and metals. The process is relatively simple, inexpensive, and has a low barrier to entry, making it an accessible option for many businesses and individuals.

Unit 4

1. What is AI? Name the area where AI can be implemented.

   Ans:

   AI stands for Artificial Intelligence, which refers to the development of computer systems that can perform tasks that typically require human intelligence, such as visual perception, speech recognition, decision-making, and language translation.

   There are a wide range of areas where AI can be implemented, including but not limited to:

   Healthcare: AI can be used to analyze medical images, predict disease outcomes, and support medical decision-making.

   Finance: AI can be used to analyze market trends, predict stock prices, and identify fraud.

   Retail: AI can be used to personalize shopping experiences, analyze customer behavior, and optimize inventory management.

   Manufacturing: AI can be used to optimize production processes, predict maintenance needs, and improve quality control.

   Transportation: AI can be used to optimize logistics and supply chain management, improve traffic flow, and reduce emissions.

   Agriculture: AI can be used to optimize crop yields, predict weather patterns, and improve soil analysis.

   Education: AI can be used to personalize learning experiences, grade assignments, and provide real-time feedback to students.

   Marketing: AI can be used to analyze customer behavior, predict future trends, and optimize advertising campaigns.

   These are just a few examples of the areas where AI can be implemented. AI is a rapidly evolving field and new applications are being developed all the time, making it one of the most exciting and rapidly growing areas of technology today.

2. Why AI is necessary in current industries.

   Ans:

   Artificial Intelligence (AI) has become necessary in many industries today for several reasons:

   Increased Efficiency: AI can automate tasks that are repetitive or time-consuming, freeing up human resources to focus on higher-level tasks and improving efficiency.

   Improved Decision Making: AI can analyze vast amounts of data and provide insights and recommendations that would be difficult or impossible for humans to identify on their own.

Atmiya University Rajkot

Personalization: AI can be used to personalize products and services, improving customer experience and loyalty.

Cost Reduction: AI can help organizations to reduce costs by automating tasks and optimizing operations.

Increased Productivity: AI can be used to optimize production processes and increase productivity, reducing waste and increasing output.

Improved Safety: AI can be used to improve safety in industries such as transportation, healthcare, and construction, reducing the risk of accidents and incidents.

Better Customer Experience: AI can be used to provide real-time customer support, improving customer experience and satisfaction.

Competitive Advantage: AI can give organizations a competitive advantage by providing insights and recommendations that can inform business strategy and improve performance.

In today's fast-paced and competitive business environment, AI has become a key technology for organizations to remain competitive and improve their performance. By leveraging AI, organizations can gain new insights, optimize operations, and improve their bottom line.

3. Explain LANDSCAPE of ENTERPRISE AI APPLICATIONS.

Ans:

The landscape of enterprise AI applications refers to the various industries, applications, and solutions that use Artificial Intelligence (AI) technology. The enterprise AI landscape is diverse and rapidly evolving, and can be broadly categorized into several areas:

Customer Experience: AI can be used to improve customer experience by providing personalized products and services, optimizing sales and marketing, and providing real-time customer support.

Operations: AI can be used to optimize operations by automating tasks, improving inventory management, and optimizing production processes.

Human Resources: AI can be used to improve human resources by automating administrative tasks, providing real-time feedback, and improving talent acquisition.

Supply Chain Management: AI can be used to optimize supply chain management by improving logistics, reducing waste, and increasing efficiency.

Healthcare: AI can be used to improve healthcare by automating administrative tasks, improving patient outcomes, and reducing costs.

Finance: AI can be used to improve finance by reducing fraud, optimizing investments, and automating administrative tasks.

Retail: AI can be used to improve retail by optimizing inventory management, personalizing shopping experiences, and reducing costs.

Manufacturing: AI can be used to improve manufacturing by optimizing production processes, reducing waste, and increasing efficiency.

Atmiya University Rajkot

These are just a few examples of the various areas where AI is being applied in the enterprise. Each industry has its own unique challenges and opportunities, and the AI landscape is constantly evolving as new applications and solutions are developed. The use of AI in the enterprise is growing rapidly, and it is becoming increasingly important for organizations to understand and leverage AI in order to remain competitive and improve their performance.

4. Write challenges in current manufacturing industries.

   Ans:

   There are several challenges facing the manufacturing industry today, including:

   Labor Shortages: Many manufacturing industries are facing a shortage of skilled workers, which can impact productivity and competitiveness.

   Global Competition: Manufacturing industries are facing increased competition from companies in other countries, which can impact pricing and margins.

   Cost Pressure: Manufacturing industries are under pressure to reduce costs and improve margins, which can be difficult in a highly competitive global market.

   Supply Chain Complexity: The supply chain for many manufacturing industries is complex and involves a large number of suppliers and partners, which can increase the risk of disruptions and delays.

   Sustainability: Manufacturers are facing pressure to reduce their environmental footprint and improve sustainability, which can increase costs and impact competitiveness.

   Technological Advancement: The pace of technological advancement is rapid in the manufacturing industry, and companies must constantly invest in research and development in order to remain competitive.

   Regulatory Compliance: Manufacturers must comply with a range of regulations, including health and safety, environmental, and labor regulations, which can increase costs and complexity.

   Cybersecurity: The use of technology in manufacturing industries has increased the risk of cyber attacks, which can impact productivity and competitiveness.

   These are just a few of the many challenges facing the manufacturing industry today. Manufacturers must continuously adapt and innovate in order to remain competitive and improve their performance.

5. Explain role of AI in Manufacturing Survey, Design and Production Planning

   Ans:

   In Manufacturing Survey

   The role of Artificial Intelligence (AI) in a manufacturing survey is to automate and streamline various aspects of the survey process, such as data collection, analysis, and reporting. AI technologies, such as machine learning algorithms and natural language processing, can be used to analyze large amounts of data in real-time and provide insights and recommendations for improvement.

Atmiya University Rajkot

For example, AI-powered sentiment analysis can be used to analyze customer feedback and identify common themes and patterns. This information can then be used to improve the manufacturing process and increase customer satisfaction. AI can also be used to automate the scheduling and distribution of surveys, reducing the time and effort required for manual data collection and analysis.

Additionally, AI can help to improve the accuracy and reliability of survey results by eliminating human errors and biases. By leveraging AI technologies, manufacturers can gain a more comprehensive and accurate understanding of their operations, which can help them to identify areas for improvement and make data-driven decisions to increase efficiency and profitability.

In Design

The role of Artificial Intelligence (AI) in design is to assist and augment the creative process, enabling designers to generate new ideas and solutions more quickly and efficiently. AI can also help designers to make more informed decisions by providing insights and recommendations based on data analysis and pattern recognition.

Here are some examples of how AI is used in design:

Concept Generation: AI algorithms can generate new design concepts based on a set of criteria and design goals, allowing designers to explore a wider range of possibilities.

Predictive Modeling: AI can be used to predict the performance of a design, helping designers to identify potential problems before they occur.

Image and Video Processing: AI can be used to enhance and manipulate images and videos, allowing designers to achieve new levels of detail and accuracy in their work.

Natural Language Processing: AI-powered natural language processing can be used to understand and interpret designer intent, helping to bridge the gap between human and machine communication.

Decision Support: AI can provide designers with recommendations and insights based on data analysis, helping them to make informed decisions and optimize their designs.

Overall, the role of AI in design is to augment and enhance the creative process, enabling designers to work more efficiently and effectively, and to explore new and innovative design solutions.

In Production planning

The role of Artificial Intelligence (AI) in production planning is to automate and optimize various aspects of the production process, from demand forecasting and inventory management to scheduling and resource allocation. AI technologies, such as machine learning algorithms and predictive analytics, can be used to analyze data and make informed decisions about production processes and operations.

Here are some examples of how AI is used in production planning:

Atmiya University
Rajkot

Demand Forecasting: AI can be used to analyze historical sales data and other relevant factors to generate accurate demand forecasts, helping production planners to make informed decisions about inventory levels and production schedules.

Inventory Management: AI can be used to optimize inventory levels, reducing the risk of stockouts and overstocking while maximizing operational efficiency.

Scheduling: AI can be used to optimize production schedules, ensuring that resources are used efficiently and that production deadlines are met.

Resource Allocation: AI can be used to allocate resources, such as materials and labor, to optimize production processes and reduce waste.

Predictive Maintenance: AI can be used to predict when equipment or machinery may fail, allowing production planners to proactively schedule maintenance and reduce downtime.

Overall, the role of AI in production planning is to automate and optimize various aspects of the production process, enabling production planners to make informed decisions, improve efficiency and reduce costs.

From Unit: 5

1. **What are digital twins?explain different ways to improve manufacturing operations by it.**

   Ans

   A digital twin is a digital replica of a physical asset or system that can be used to simulate its real-world behavior and performance. In manufacturing, digital twins can be used to improve operations by providing a virtual representation of the physical manufacturing process, equipment, and systems. This information can be used to optimize production, reduce downtime, and improve overall efficiency.

   Here are some ways that digital twins can be used to improve manufacturing operations:

   Predictive maintenance: By monitoring the performance of a digital twin in real-time, manufacturers can predict when equipment is likely to fail and take proactive steps to prevent it.

   Process optimization: Digital twins can be used to simulate and optimize manufacturing processes, reducing the need for physical trials and reducing lead times.

   Quality control: By monitoring the performance of a digital twin, manufacturers can detect and address quality issues before they occur, reducing the risk of defects and improving overall quality.

   Resource planning: Digital twins can provide detailed information about resource utilization and availability, allowing manufacturers to plan production more effectively and optimize the use of resources.

   Safety management: By simulating potential safety hazards, digital twins can be used to identify and address safety risks before they occur, reducing the risk of accidents and improving overall safety.

Atmiya University Rajkot

Overall, digital twins provide manufacturers with a powerful tool for improving operations, reducing costs, and increasing efficiency.

2. **Explain Applications of Digital Twins in the manufacturing sector.**

   Ans

   Digital twins have numerous applications in the manufacturing sector, including:

   Predictive maintenance: By monitoring the performance of digital twins in real-time, manufacturers can predict when equipment is likely to fail and take proactive steps to prevent it.

   Process optimization: Digital twins can be used to simulate and optimize manufacturing processes, reducing the need for physical trials and reducing lead times.

   Quality control: By monitoring the performance of digital twins, manufacturers can detect and address quality issues before they occur, reducing the risk of defects and improving overall quality.

   Resource planning: Digital twins can provide detailed information about resource utilization and availability, allowing manufacturers to plan production more effectively and optimize the use of resources.

   Safety management: By simulating potential safety hazards, digital twins can be used to identify and address safety risks before they occur, reducing the risk of accidents and improving overall safety.

   Supply chain management: By using digital twins to monitor the performance of suppliers and the supply chain, manufacturers can identify and address potential issues and improve overall efficiency.

   Production planning and scheduling: Digital twins can be used to simulate production scenarios, allowing manufacturers to optimize schedules and make informed decisions about production planning.

   Quality assurance: Digital twins can be used to monitor the quality of manufactured products and ensure that they meet customer specifications.

   Overall, digital twins have the potential to revolutionize the manufacturing sector by providing manufacturers with a powerful tool for improving operations, reducing costs, and increasing efficiency.

3. **Explain Key Considerations for Deploying Digital Twins.**

   Ans

   The following are key considerations for deploying digital twins in manufacturing operations:

   Data collection and management: To build and maintain an accurate digital twin, it is essential to have a reliable and comprehensive data collection system in place. This data must be organized and managed effectively to ensure that the digital twin remains up-to-date and accurate.

Atmiya University Rajkot

Integration with existing systems: Digital twins should be integrated with existing systems, such as ERP and MES, to ensure that they can provide valuable insights into the manufacturing process.
Scalability: As the number of digital twins in use increases, it is essential to have a scalable infrastructure in place to support them. This may involve investing in new hardware and software, as well as developing new processes and procedures.
Security: To protect sensitive information, it is essential to have robust security measures in place to prevent unauthorized access and data breaches. This may involve implementing encryption, firewalls, and other security protocols.
Data privacy: When collecting and storing data, it is important to consider privacy regulations and laws, such as the European Union's General Data Protection Regulation (GDPR).
Implementation and maintenance: The deployment of digital twins requires careful planning and execution, as well as ongoing maintenance and support to ensure that they remain accurate and effective.
Cost: Implementing digital twins can be expensive, so it is important to consider the costs involved and determine the expected return on investment.

Overall, deploying digital twins requires careful consideration and planning to ensure that they are implemented effectively and deliver the desired benefits.

4. **What are all the Advantages, impact and challenges of DT technology in IIOT.**

Ans

Advantages of Digital Twin technology in IIoT (Industrial Internet of Things):
Predictive maintenance: Digital Twins can provide real-time data about the performance and health of industrial equipment, enabling predictive maintenance that can prevent equipment failures and reduce downtime.
Improved efficiency: By simulating and optimizing industrial processes, Digital Twins can help to increase efficiency and reduce waste.
Enhanced decision making: Digital Twins provide real-time data that can be used to make informed decisions about production and operations, improving overall productivity and competitiveness.
Better product design: Digital Twins can be used to design and test new products, reducing the need for physical trials and improving the speed and accuracy of product development.
Impact of Digital Twin technology in IIoT:
Improved performance: By using Digital Twins to monitor and optimize industrial processes, organizations can improve performance, increase efficiency, and reduce costs.
Increased competitiveness: Digital Twin technology enables organizations to be more agile and responsive, improving their competitiveness in the marketplace.

Atmiya University Rajkot

New business opportunities: Digital Twins can create new business opportunities by enabling organizations to develop new products and services that leverage the power of IIoT.

Challenges of Digital Twin technology in IIoT:

Data management: Digital Twins require large amounts of data, which must be collected, stored, and analyzed effectively to ensure their accuracy.

Integration with existing systems: Digital Twins must be integrated with existing systems, such as ERP and MES, to ensure that they provide valuable insights into industrial processes.

Security: To protect sensitive information, robust security measures must be in place to prevent unauthorized access and data breaches.

Implementation and maintenance: Digital Twins require careful planning and execution, as well as ongoing maintenance and support to ensure that they remain accurate and effective.

Cost: Implementing Digital Twins can be expensive, so organizations must carefully consider the costs involved and determine the expected return on investment.

Overall, Digital Twin technology has the potential to transform the IIoT and provide significant benefits, but it also presents challenges that must be carefully managed to ensure its success.

Atmiya University
Rajkot

Atmiya University, Rajkot
Faculty of Engineering & Technology

Department of Mechanical Engineering

Prepared by: Shivang S. Jani

Course: Computer Aided Design(21BTMECC601)

Module III: Geometric Modeling

GEOMETRIC MODELING

Atmiya University
Rajkot

What is Modeling ?

- Modeling is the process of representing the object or system in the form of graphics image.

- The complete object is parametrically represented in a graphical form to synthesize.

- The ability of the computer to represent a physical system as a model has tremendous potential and a lot of useful information can be extracted from the model.

Atmiya University Rajkot

2D v/s 3D Modeling

2D	3D
• Easier to create/draw • Less time consuming • Simple • Easier to learn • Less hardware requirement • Cost less	• Model can be viewed from any angle/point • Can generate 2D views automatically • Model can be displayed in full shaded colour • Check interference • Can be used to create animation, do engineering analysis, extract manufacturing data, etc

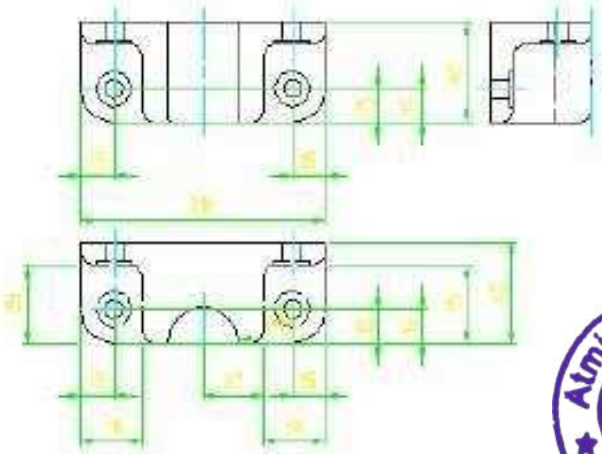

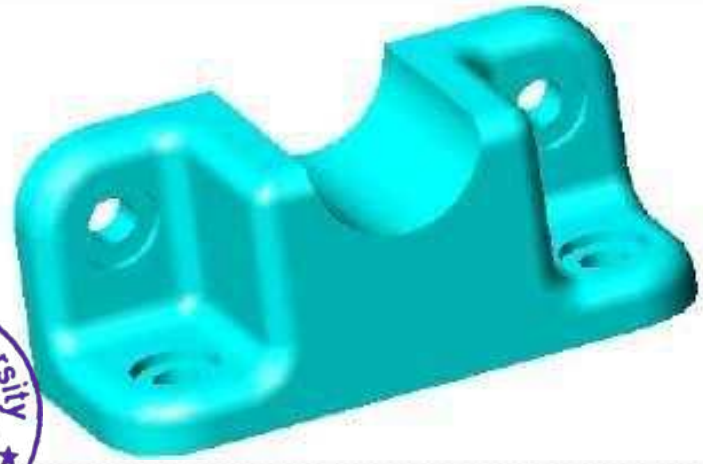

Atmiya University Rajkot

What is Geometric modeling

- Geometric modeling is the complete representation of the object in mathematical form with graphical and non-graphical information.
- The mathematical description of the geometry of an object is used to generate the image of which is to be displayed on the graphics terminal of CAD system.
- The graphical image of the object on system can be constructed by 3 types of commands to:

Atmiya University Rajkot

1. Generate basic geometric elements such as points,lines,circles, & arcs.
2. Perform operations such as translation , rotation , scaling , and other transformations.
3. Join various elements of geometry into desired shape.

- Geometric modeling is used to create precise mathematical description of the shape of the real object.

Atmiya University Rajkot

The Role of Geometric Modeling in a CAD System

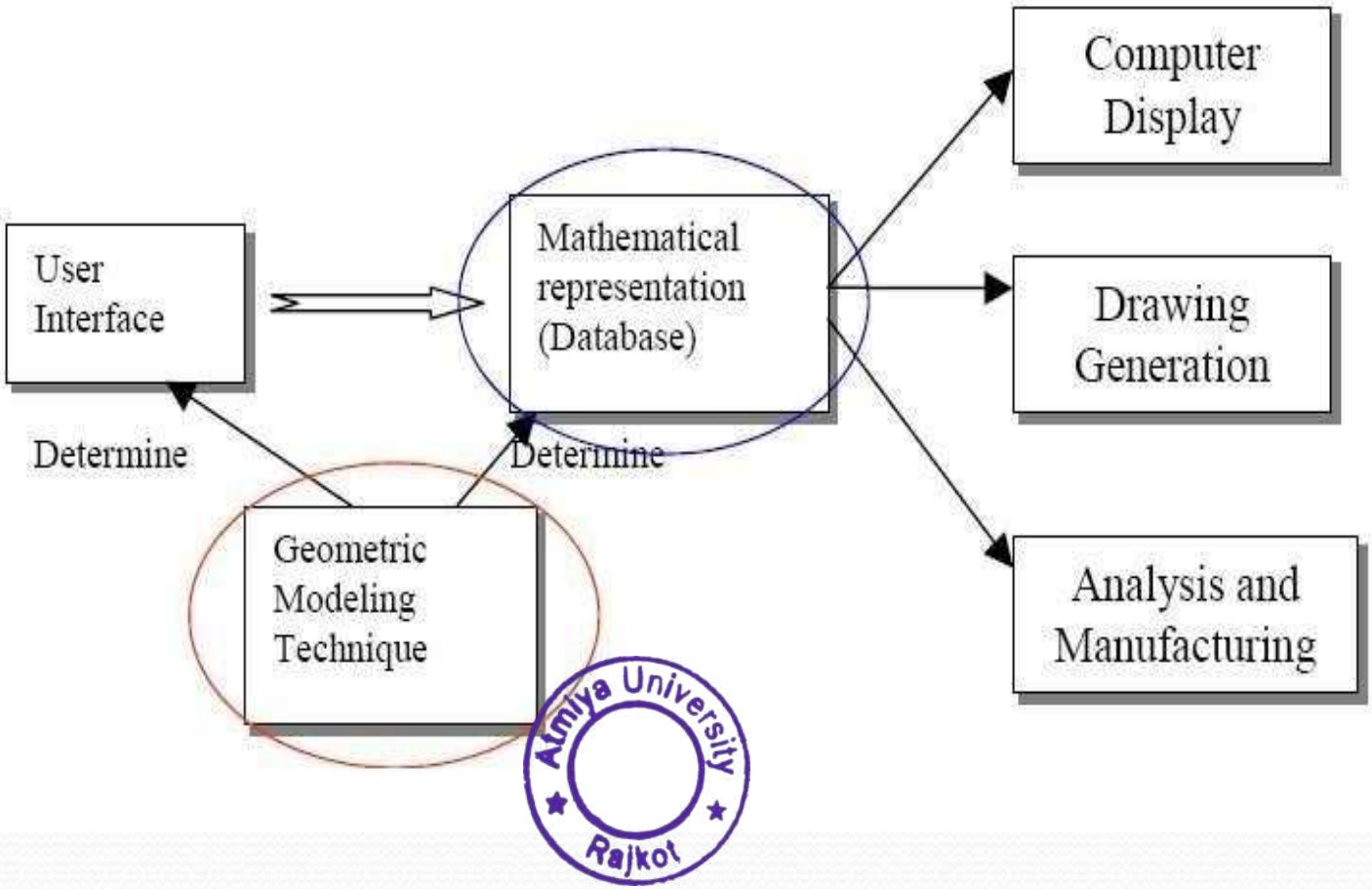

Basic Geometric Modeling Techniques

- Wireframe Modeling
- Surface Modeling
  - Analytical Surface
  - Free-form, Curved, & Sculptured Surface
- Solid Modeling
  - Constructive Solid Geometry (CSG)
  - Boundary Representation (B-Rep)
  - …
  - Feature Based Modeling
  - Parametric Modeling

Atmiya University Rajkot

Introduction to Wire Frame Modeling

- The word "wireframe" is related to the fact that one may imagine a wire that is bent to follow the object edges to generate a model
- Model consists entirely of points, lines, arcs and circles, conics,and curves.
- Designers build the physical models to help the visualization of a design.
- This may require the construction of skeleton model using wires to represent the edges of an object or component.
- Wire frame modeling is used in CAD techniques and also to facilitate the production of various projected views to aid visualization.

Atmiya University Rajkot

- A wire frame model consist of a finite set of points together with the edges connecting various pairs of these points, so that a drawing of these points and edges aids the visualization of the object.
- In 3D wireframe model, an object is not recorded as a solid. Instead the vertices that define the boundary of the object, or the intersections of the edges of the object boundary are recorded as a collection of points and their connectivity.

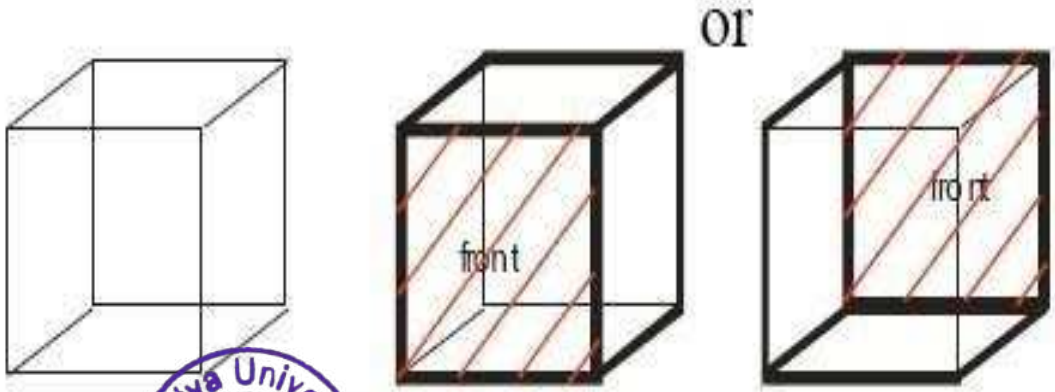

ambiguous

Atmiya University Rajkot

Types of Wire Frame Modeling

- Wire Frame models can be classified into three types.

1) 2D Model
2) 2 ½ D Model
3) 3D Model

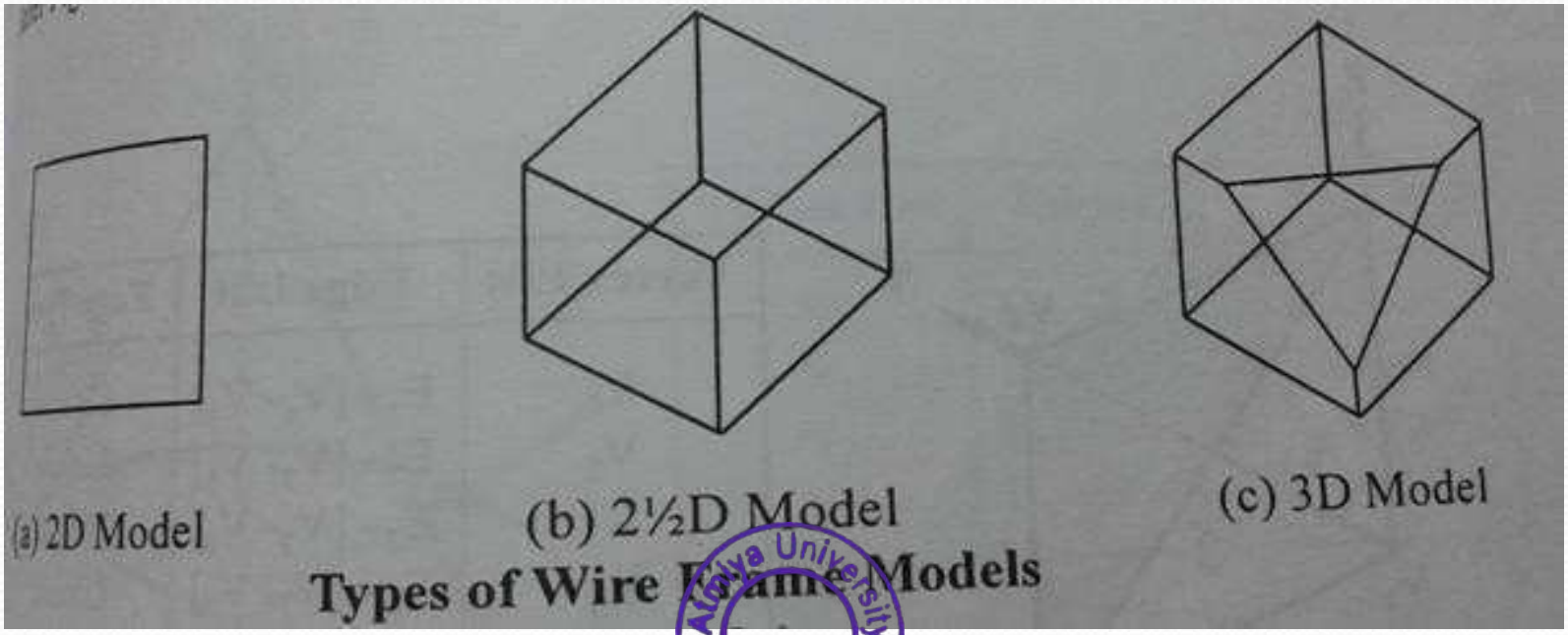

Types of Wire Frame Models

Atmiya University Rajkot

1. 2D model:-

- 2D representation is used for a flat object.
- 2D object is identified as region not as a individual primitive elements.
- 2D model shown in figure will be interpreted as a square region and not as 4 lines connected to each other.

2. 2 ½ D Model:-

- Capability of permitting a 3D object to be represented as long as it does not have any side wall details (i.e cylinder, cube).
- This kind of object simplifies the data representation of the object, thereby improving the efficiency of the software.

3. 3D Model:-

- Suitable for full 3D Modeling of a more complex geometry of the object.

Atmiya University Rajkot

- A wire frame representation of a 3D object consists of a finite set of points and connecting edges which define the object adequately and facilitate better visualization.
- The edges does not necessarily imply that it is a straight line segment.
- An edge may be an arc of a circle or any other well defined space curve.

Atmiya University
Rajkot

Wireframe Modeling

- ADVANTAGES

1) Simple to present the basic idea of solid object.
2) Can be used for preview purpose.
3) Easy to generate and simulate.
4) Less storage memory is required.

- DISADVANTAGES

1) Sometimes it does not represent the real idea of solid object.
2) Does not represent surface , mass & volume property of an object.
3) Not suitable for complex geometry.
4) Not suitable for interference checking, tool path generation and surface properties.

Atmiya University Rajkot

SOLID MODELING

- Solid modeling systems are used to model a shape having a closed volume, called a solid
- Solid model contains both geometric data and topological information of the object.
- Solid models can easily converted in to the wire frame models but wire frame models cannot be completely converted in solid models.
- Solid models are also used to generate orthographic views.
- The solid models can also be used as geometric input for the finite element analysis and manufacturing operations for numerically controlled machines.

Atmiya University Rajkot

ADVANTAGES OF SOLID MODELING

- The solid models give better realisation of actual object than wire frame or surface model of the same object
- Solid model can be easily converted in wire frame model
- Unlike the wire frame models and surface models , which contain only geometric data, solid models contain both geometric data and topological information of the objects. Thus solid models store more information than the wire frame or surface models. Therefore the solid models are regarded as the complete and most unambiguous representation of the objects.

Atmiya University Rajkot

- Using the solid models, it is possible to calculate automatically the properties such as: mass,volume, Moment of Inertia etc.
- The solid modeling produces accurate design, improves the quality of design, and provides complete 3D definition of the objects.
- solid models are directly used for input in FEA Softwares and CNC Machines.

LIMITATIONS:-

- Solid models requires very large memory and the time required to edit, regenerate or refresh the solid model is more than wire frame model.

Atmiya University Rajkot

GEOMETRY & TOPOLOGY

- The data required for the construction of solid models can be divided into two categories:

1. Geometry
2. Topology

Geometry:-

- Geometry is the actual dimensions that define the entities of the object.
- The geometric data refers to 3D coordinate positions of the object in space. It represents the actual dimensions which defines the entities of an object.
- The Geometry that defines the object is shown in fig. (a)

Atmiya University Rajkot

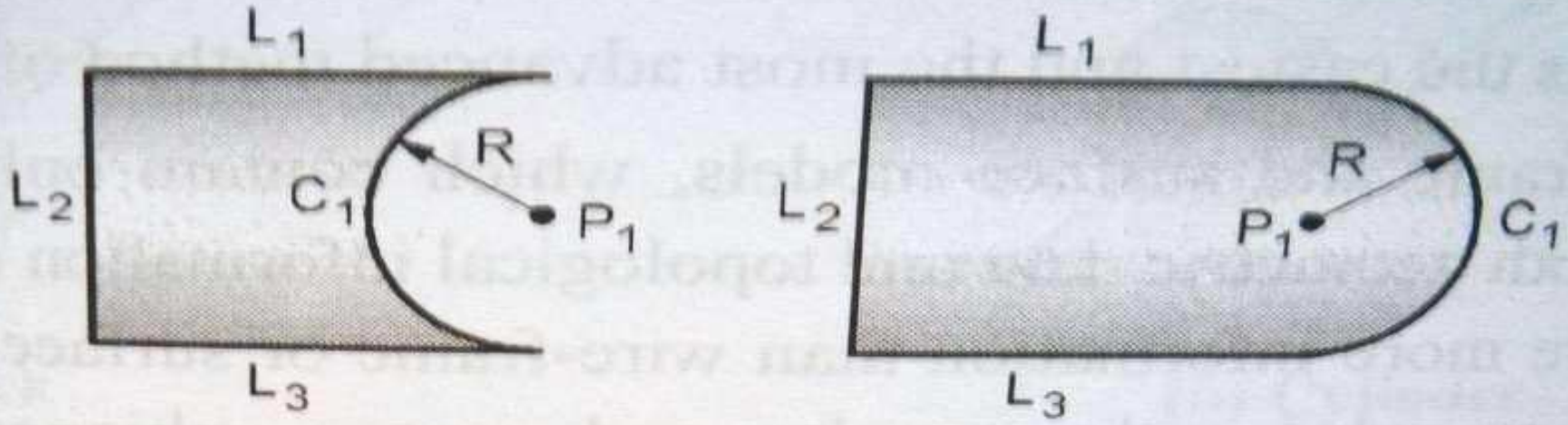

(a) Same Geometry But Different Topology

Atmiya University Rajkot

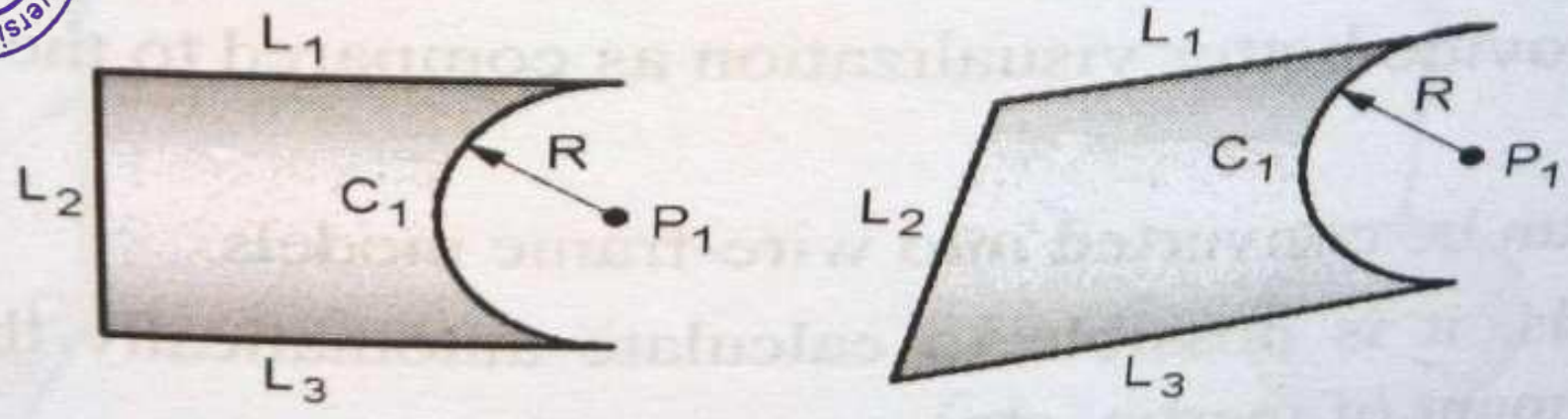

(b) Same Topology But Different Geometry

1. The length of lines L_1 , L_2 , L_3
2. The angle between the lines
3. The radius R of half circle
4. The center P_1 of half circle

❖ **Topology:-**

- Topology is the connectivity & associativity of the different entities of the object.
- It describes the way in which the different entities of the object are connected together.
- The topology that defines the object are shown in fig. (b)

Atmiya University Rajkot

The line L_1 shares a vertex (point) with line L_2 with circle C_1 The line L_2 shares a vertex (point) with line L_1 & with line L_3 The line L_3 shares a vertex (point) with line L_2 & with circle C_1

The line L_1 & L_2 do not overlap

The point P_1 lies outside the object

- ✓It is important to note that neither geometry nor topology alone can completely define the solid model.
- ✓The solid modeling needs both geometrical and topological data.

Atmiya University Rajkot

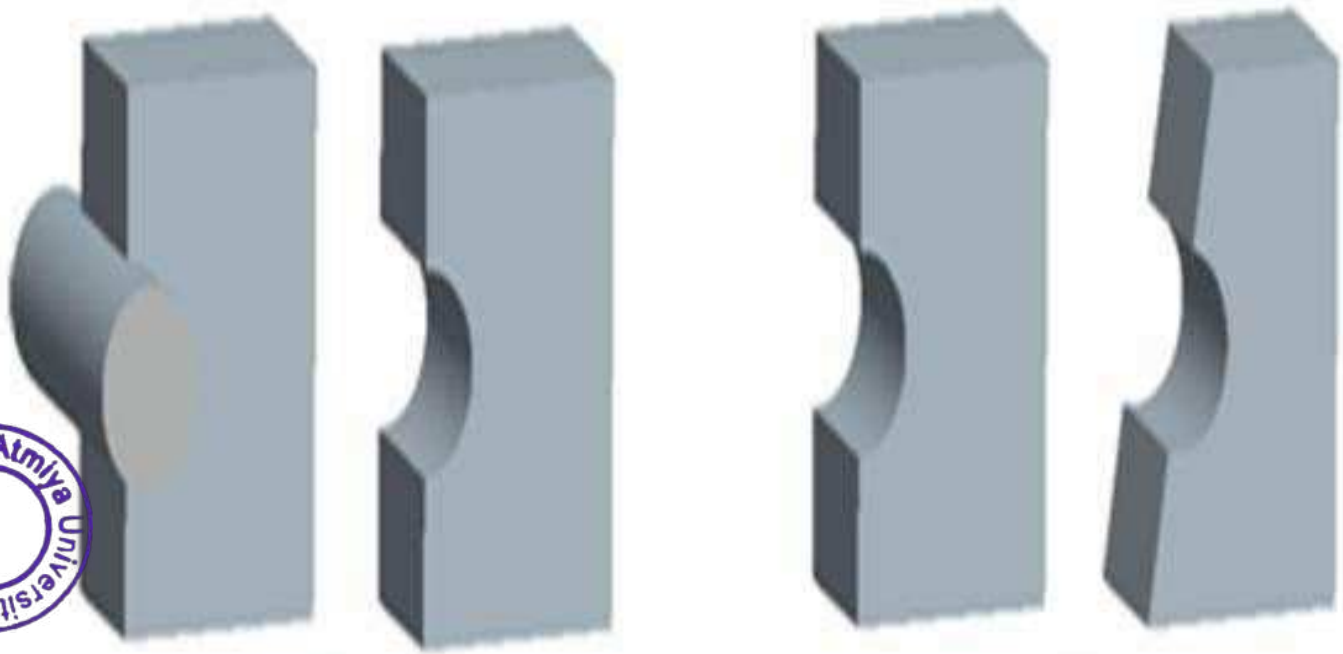

(a) (b)

(a) Same geometry with different topology and (b) different geometry with same topology

Atmiya University Rajkot

- The figure illustrates the difference between geometry and topology. The geometry that defines the object is the lengths of lines, areas of surfaces, the angles between the lines, and the radius and the center of the cylinder and the height. On the other hand, topology (sometimes called combinatorial structure), is the connectivity and associativity of the object entities. It determines the relational information between object entities. From a user point of view, geometry is visible and topology is considered to be nongraphical relational information that is stored in solid model databases and are not visible to users.

Atmiya University Rajkot

SOLID ENTITIES

- Solid model of an object is created by using the 3D geometric entities known as primitives
- Following are the most commonly used primitives:-

1) Block
2) Cylinder
3) Sphere
4) Cone
5) Wedge
6) Torus

Atmiya University Rajkot

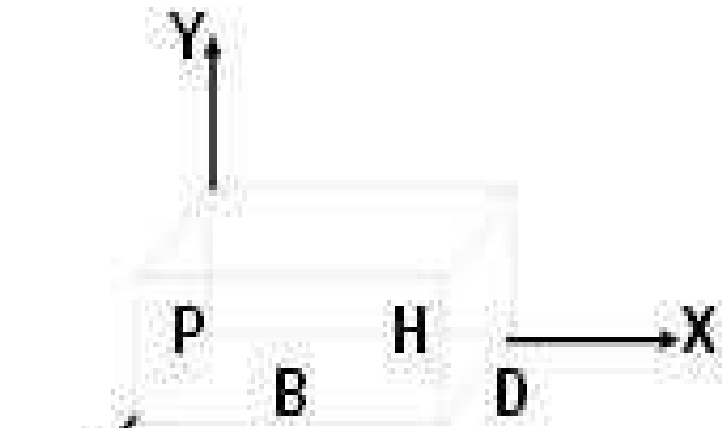

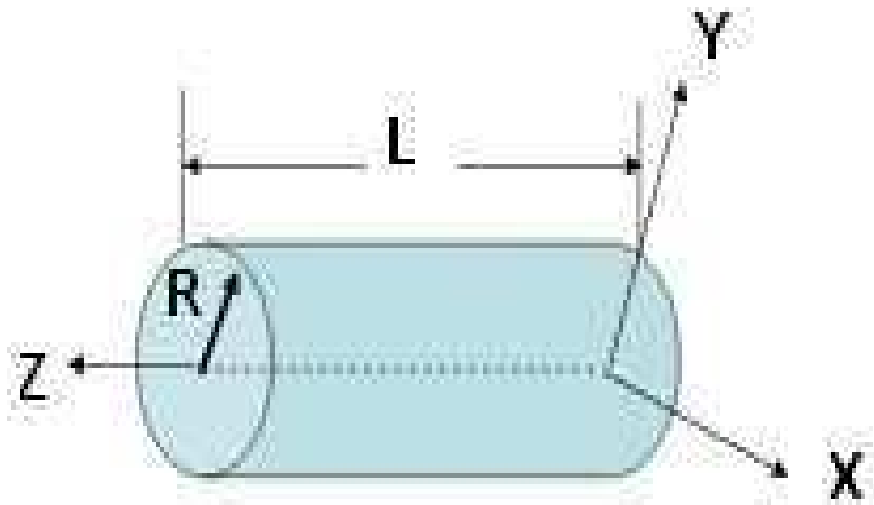

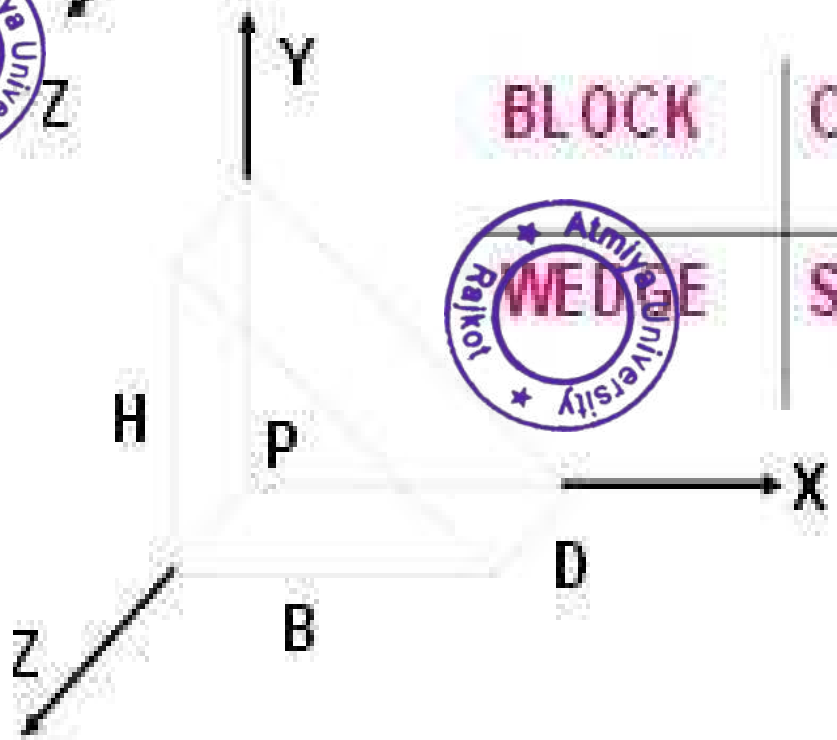

BLOCK | CYLINDER

WEDGE | SPHERE

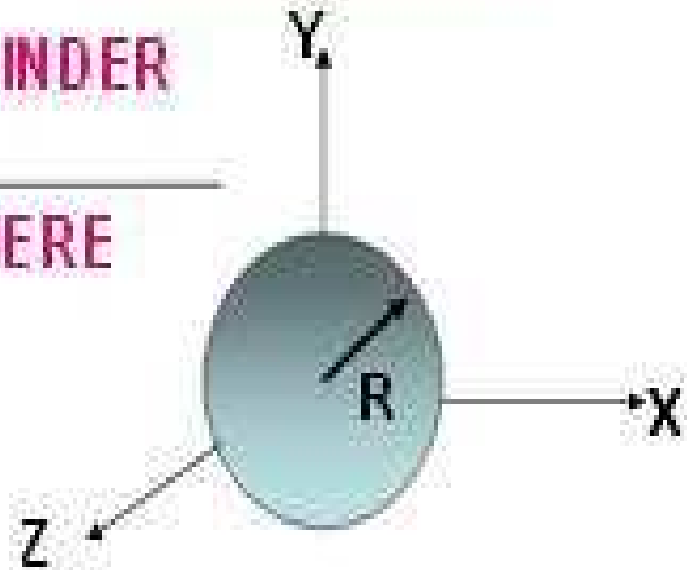

Atmiya University Rajkot

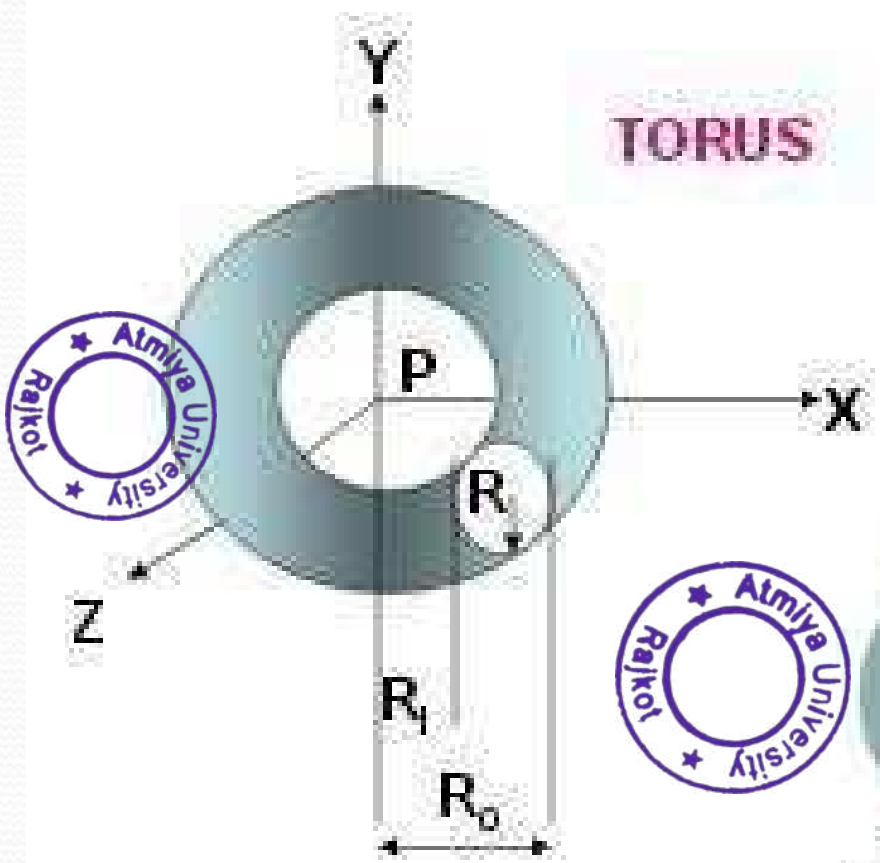

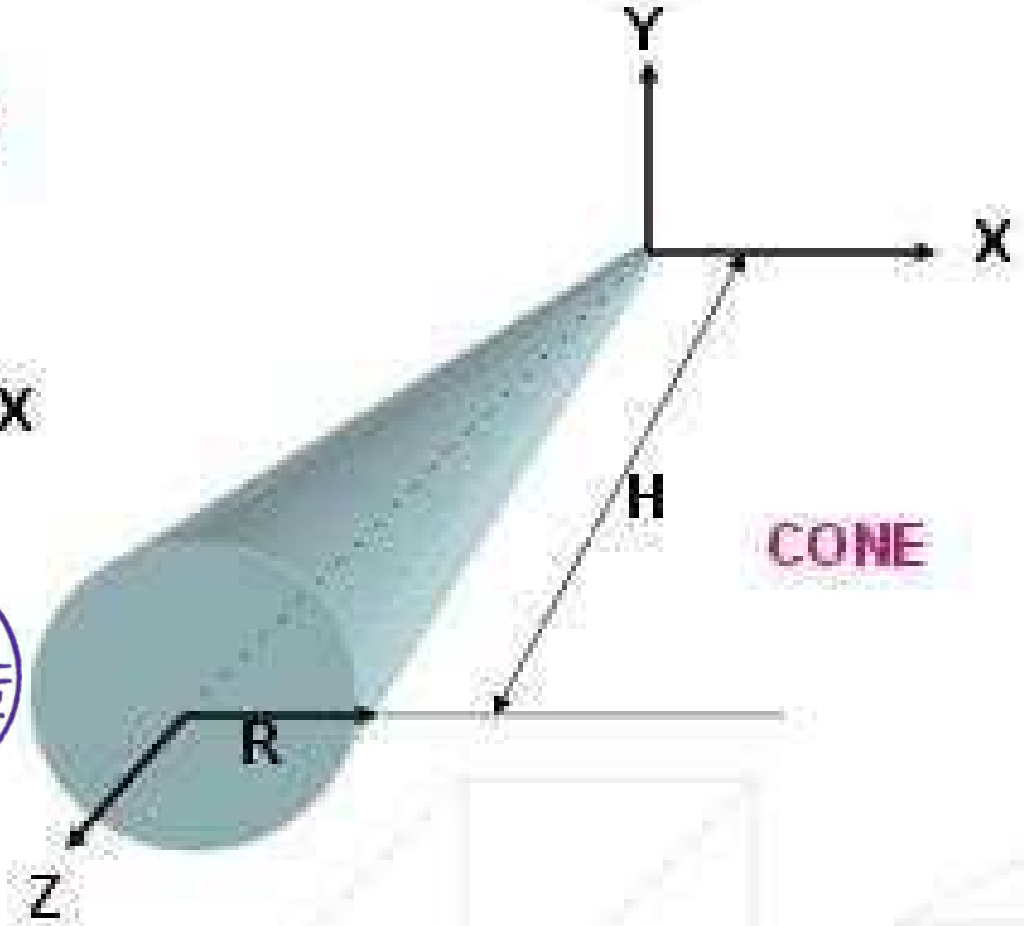

Atmiya University Rajkot
Atmiya University Rajkot

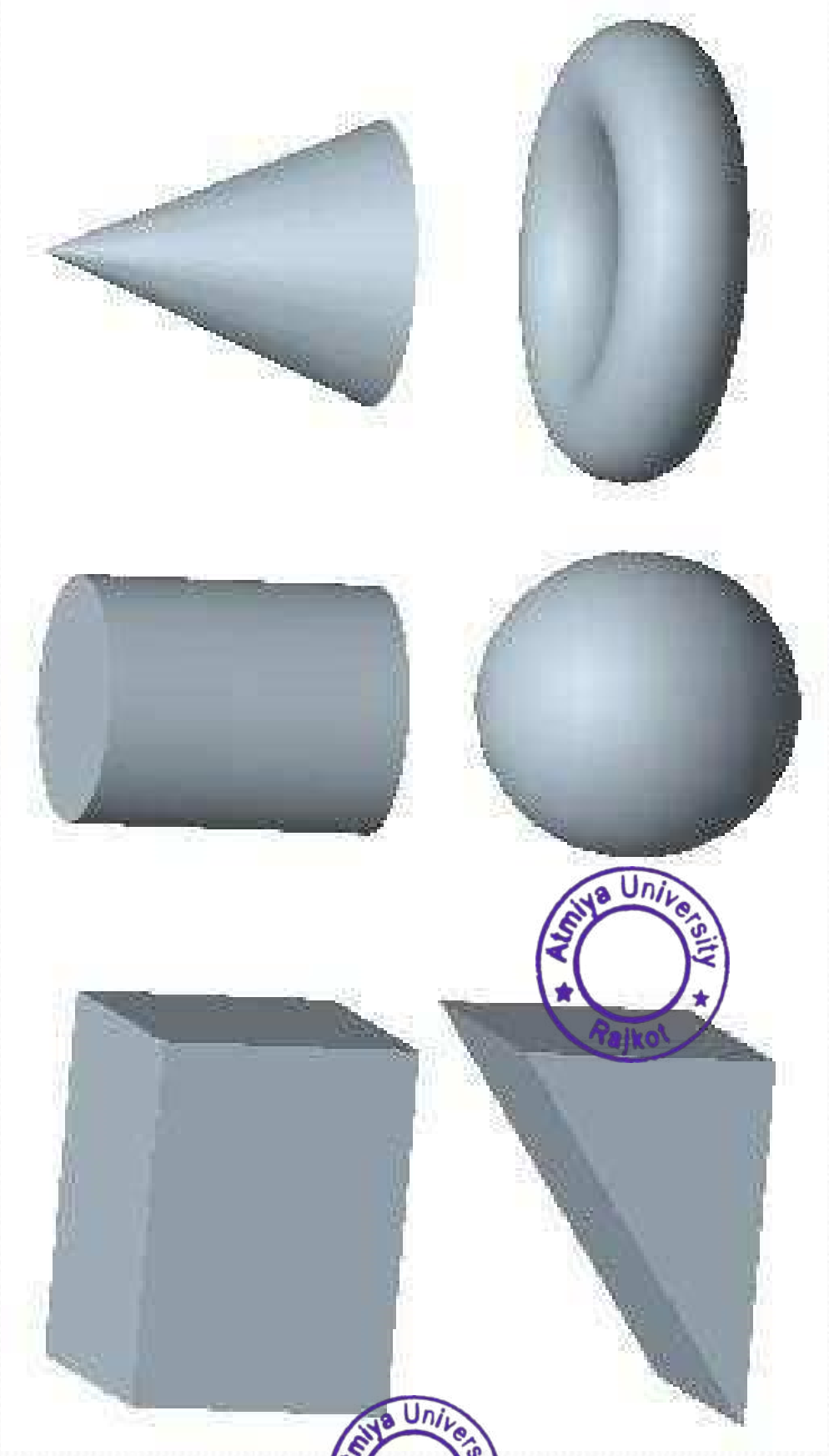

Atmiya University
Rajkot

Atmiya University
Rajkot

METHODS OR REPRESENTATION SCHEMES OF SOLID MODELING

- The various approaches used for creating the solid models of the objects are as follows:-

1. Constructive Solid Geometry (CSG OR C-Rep)
2. Boundary Representation (B-Rep)
3. Sweeping
4. Parametric solid modeling
5. Primitive instancing
6. Feature Based Modeling
7. Cell Decomposition
8. Spatial Occupancy Enumeration

Atmiya University Rajkot

1. Constructive Solid Geometry

- CSG is one of the two most popular and widely used approaches to create the solid models of the objects.
- In a CSG approach, a solid model of an object is created by using the 3 D geometric entities known as Primitives.
- These primitives can be combined by a mathematical set of boolean operations to create the solid.
- In CSG Approach 2 or more primitives are combined are combined by boolean operations to create the desired model.

Atmiya University Rajkot

- The boolean operation used are : Union, Intersection and difference
- The union is used to combine two primitives, the intersection is used to get a common volume in two primitives and the difference is used to substract one primitive from the other.
- Fig. Shows the boolean operation a block A and cylinder B.

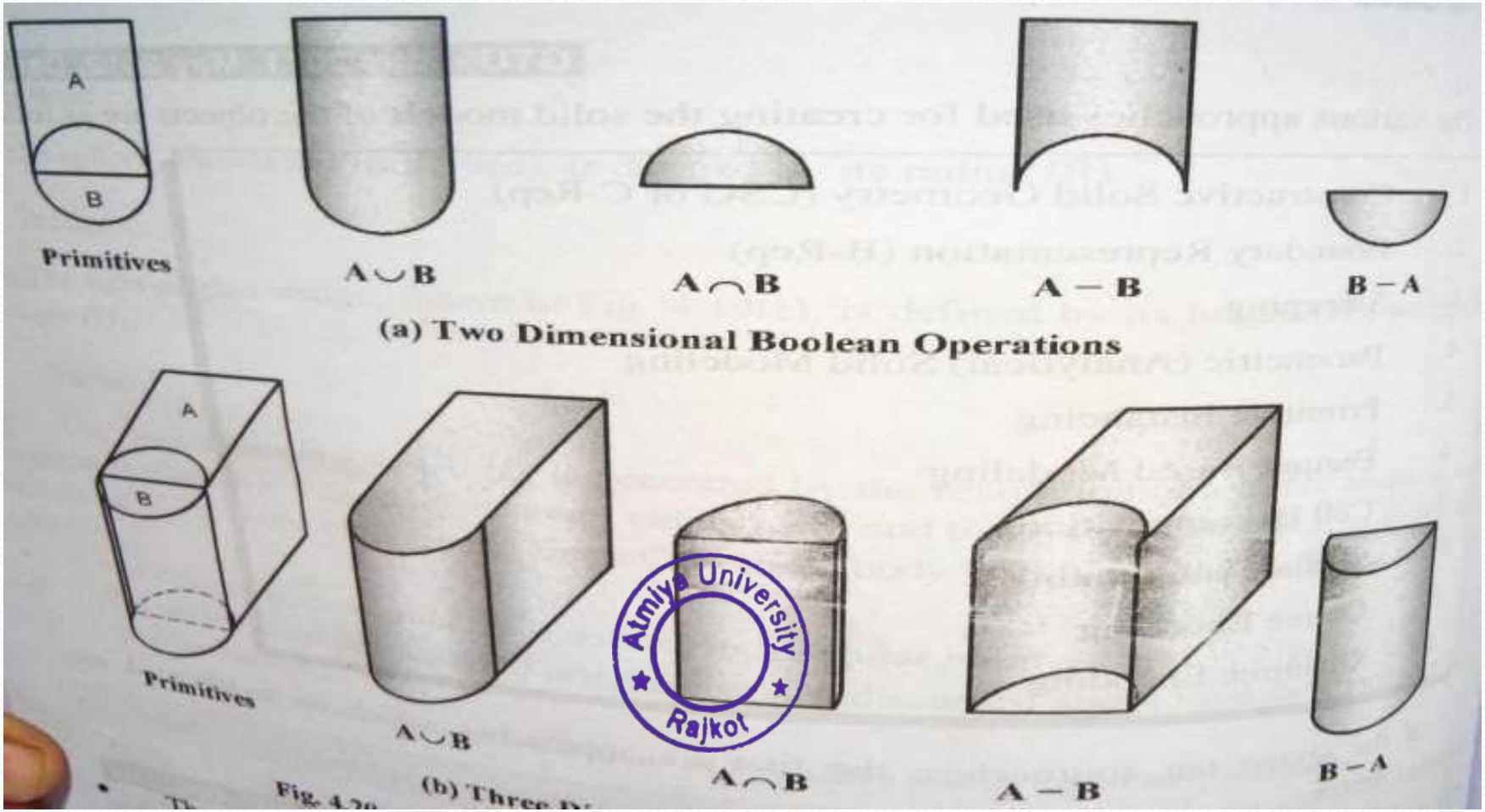

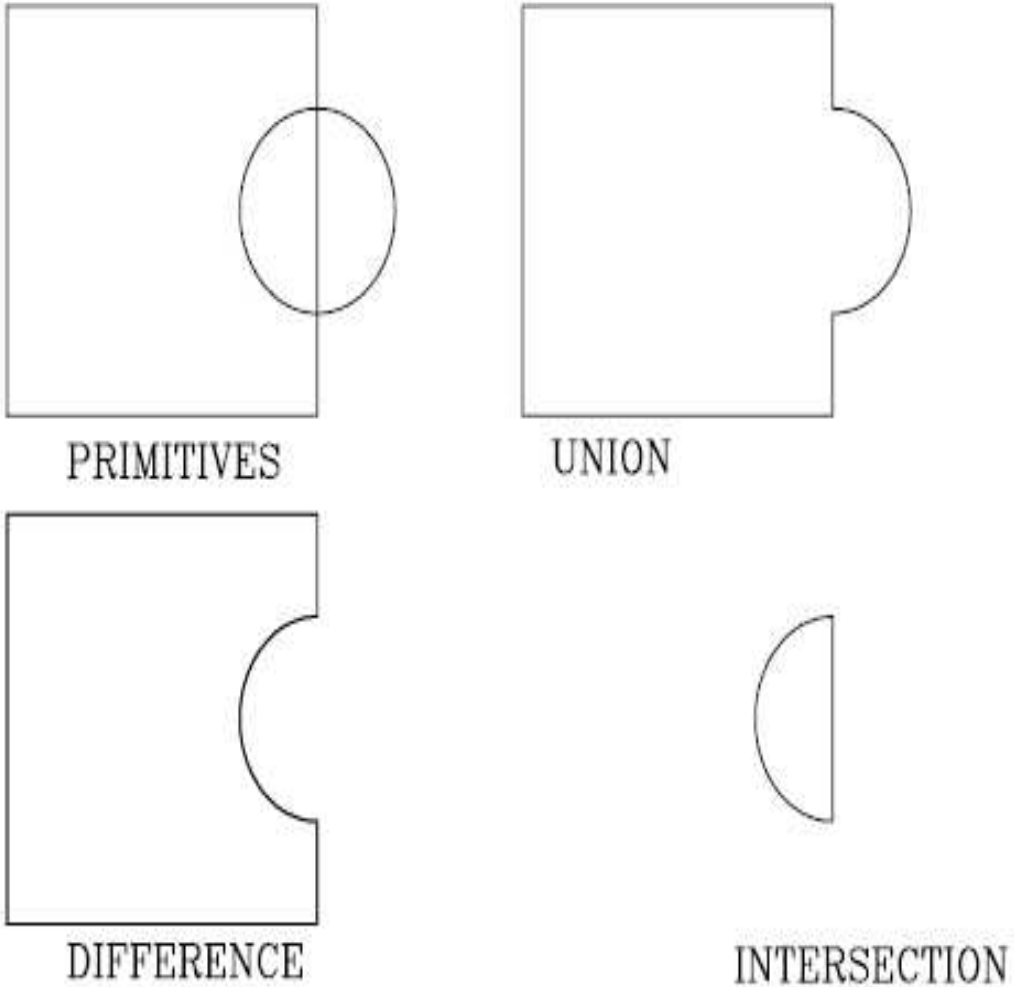

Atmiya University Rajkot

The Boolean operators and their effect on model construction

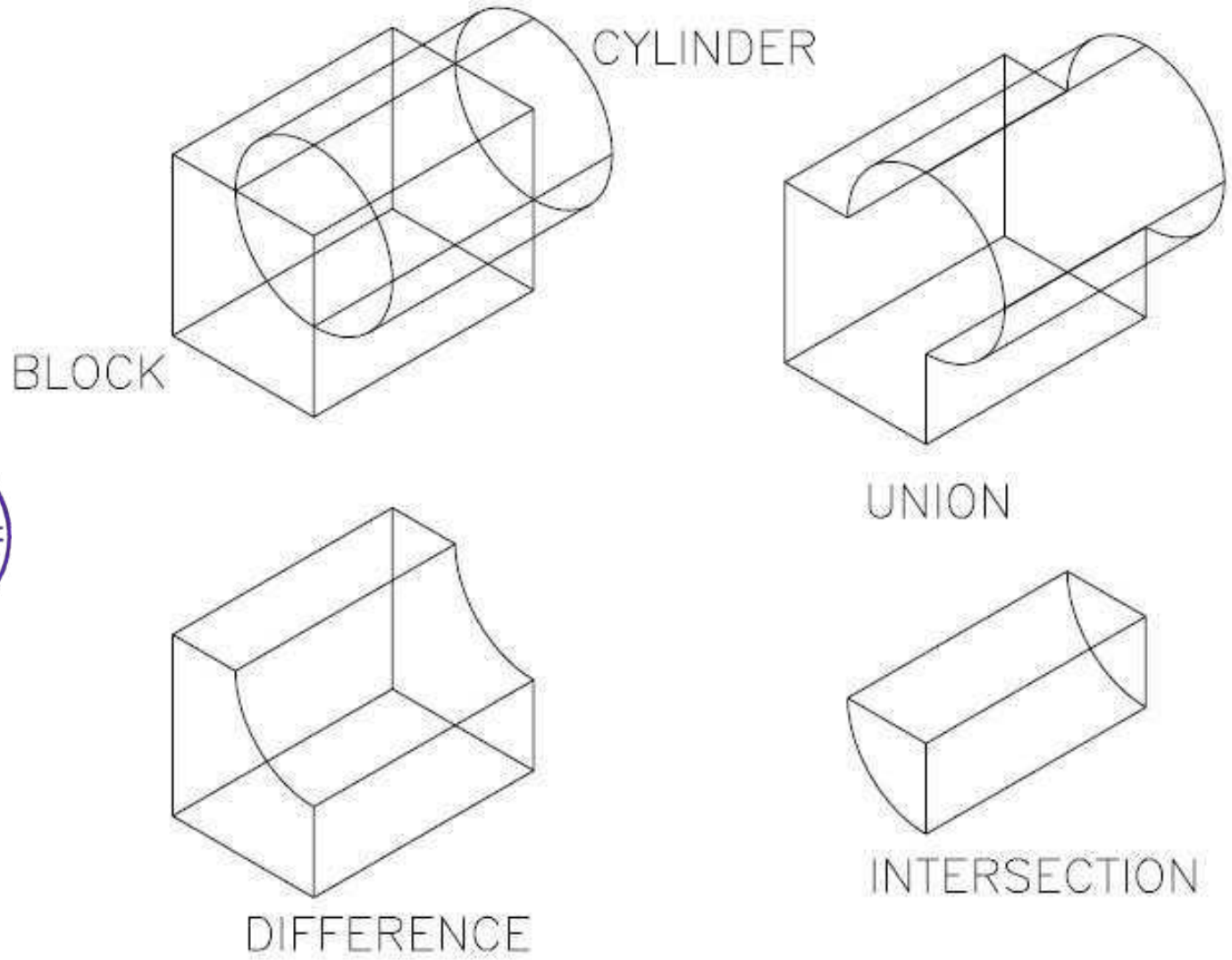

Atmiya University Rajkot

The Boolean operators and their effect on model construction

- The data representation of CSG objects is represented by a **binary tree.**
- The binary tree gives the complete representation of the how the **individual primitives** are combined to represent the object.
- The number of primitives thus decides the number of boolean operations required to construct the binary tree.
- The balanced distribution of the tree is desired to achieve minimum computations while modifying model.
- A balanced tree can be defined as a tree whose left and right subtrees have almost an equal no. of nodes.
- A balanced and unbalanced of building the same object is shown in fig.

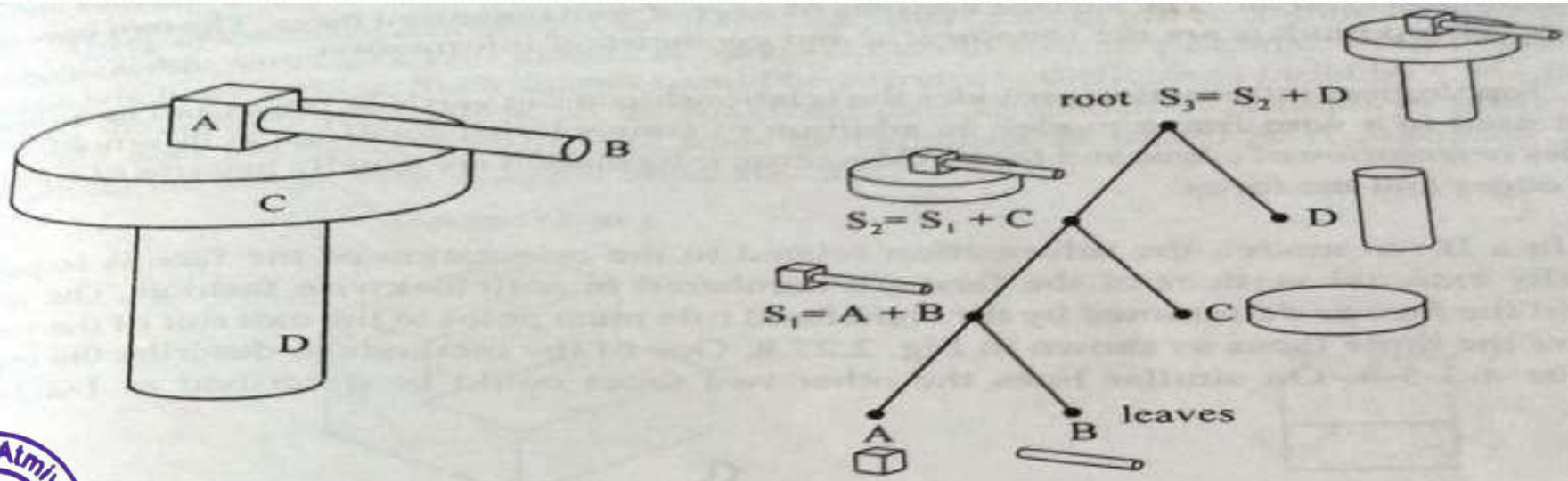

(a) Unbalanced Tree

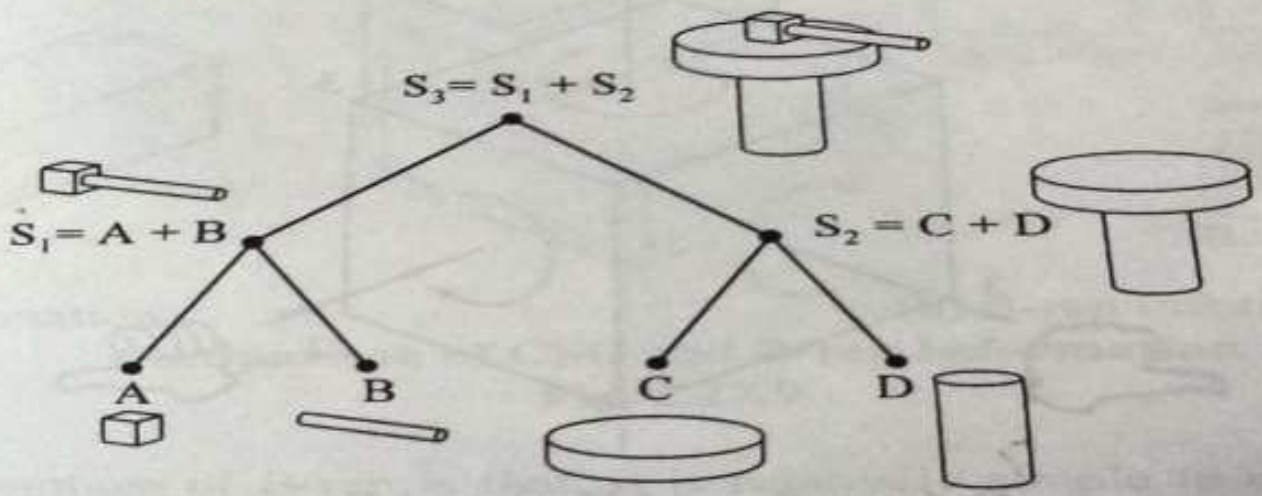

(b) Balanced Tree

CSG Tree

Atmiya University Rajkot

- Constructive solid geometry (CSG)- CSG tree
- CSG tree stores the history of applying boolean operations on the primitives.
  - Stores in a binary tree format
  - The outer leaf nodes of tree represent the primitives
  - The interior nodes represent the boolean operations performed.

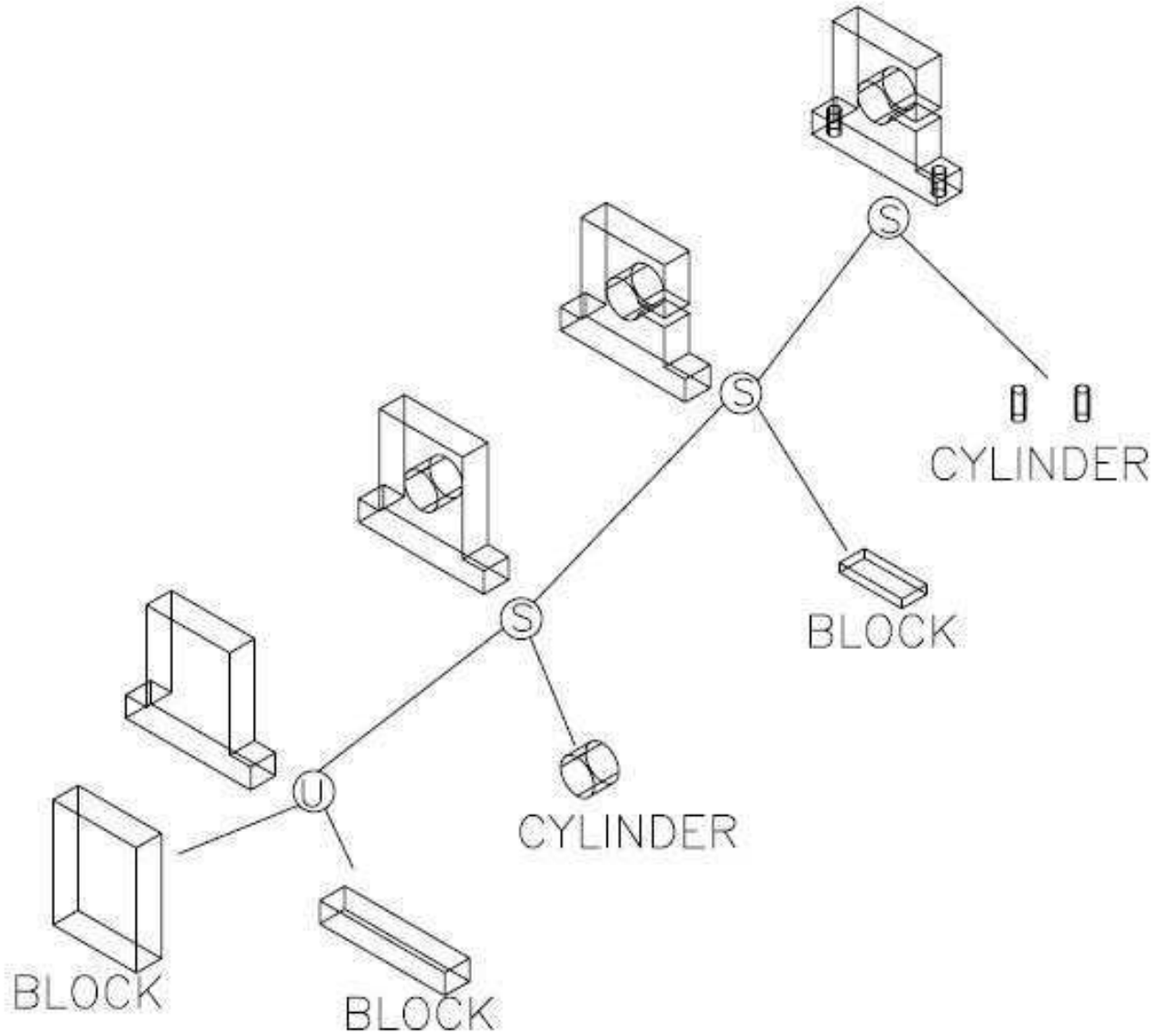

Creating a solid with the 3D primitives in solid modelling and the model shown in the form of Constructive Solid Geometry (CSG)

Atmiya University Rajkot

Constructive solid geometry (CSG)- CSG tree

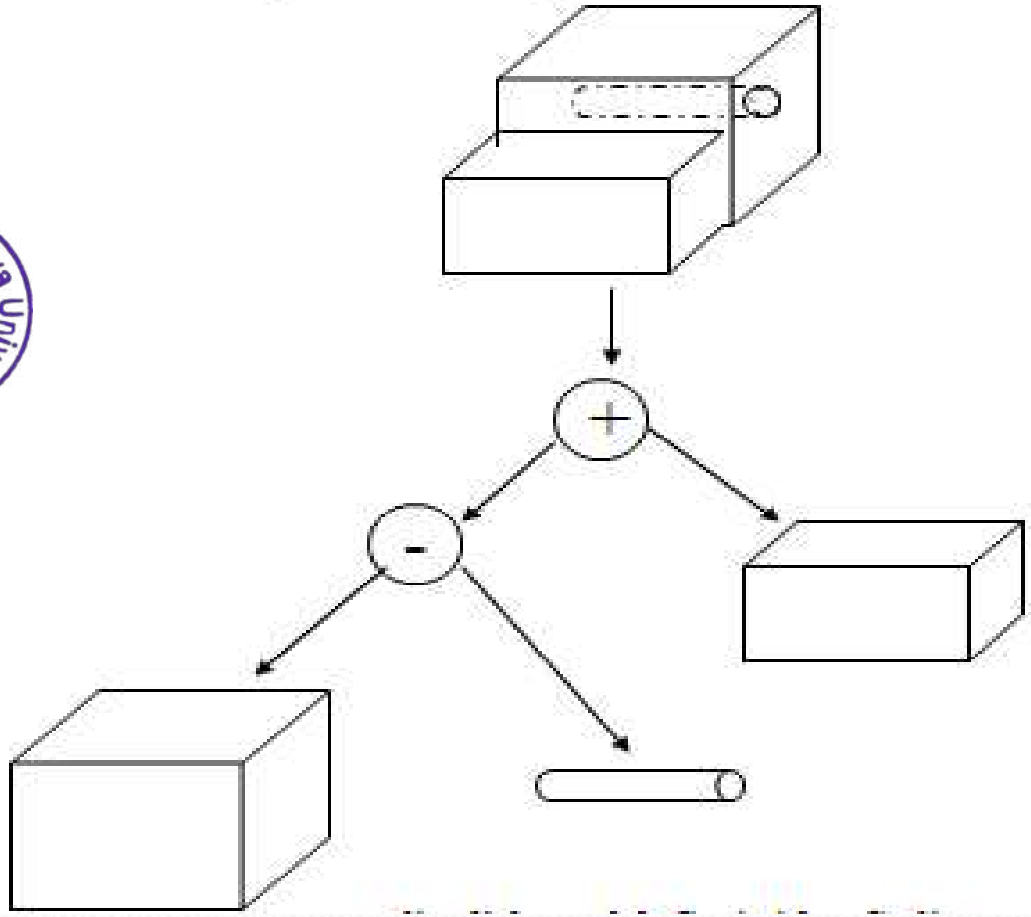

Atmiya University Rajkot

2. Boundary Representation(B-Rep)

- Solid model is defined by their enclosing surfaces or boundaries. This technique consists of the geometric information about the faces, edges and vertices of an object with the topological data on how these are connected.
- Boundary Representation(B-Rep) approach is a popular method of solid representation.
- Extension of wire frame model with a set of faces added.
- In B-Rep solid model consist of well organized faces.
- The two important areas for B-Rep models are the topological and geometrical information.
- Topological information provides the relationship about vertices, edges and faces similar to that used in wire frame model.
- Geometric information are usually in terms of equations of the edges and the faces.

- B-Rep systems are extremely useful when unusual or complex shapes are encountered which would not be possible with CSG.
- for e.g aircraft fuselage, wing shapes and in automobile body styling.
- In B-Rep models the solid is represented as an evaluated data structure.

Comparison of CSG and B-Rep

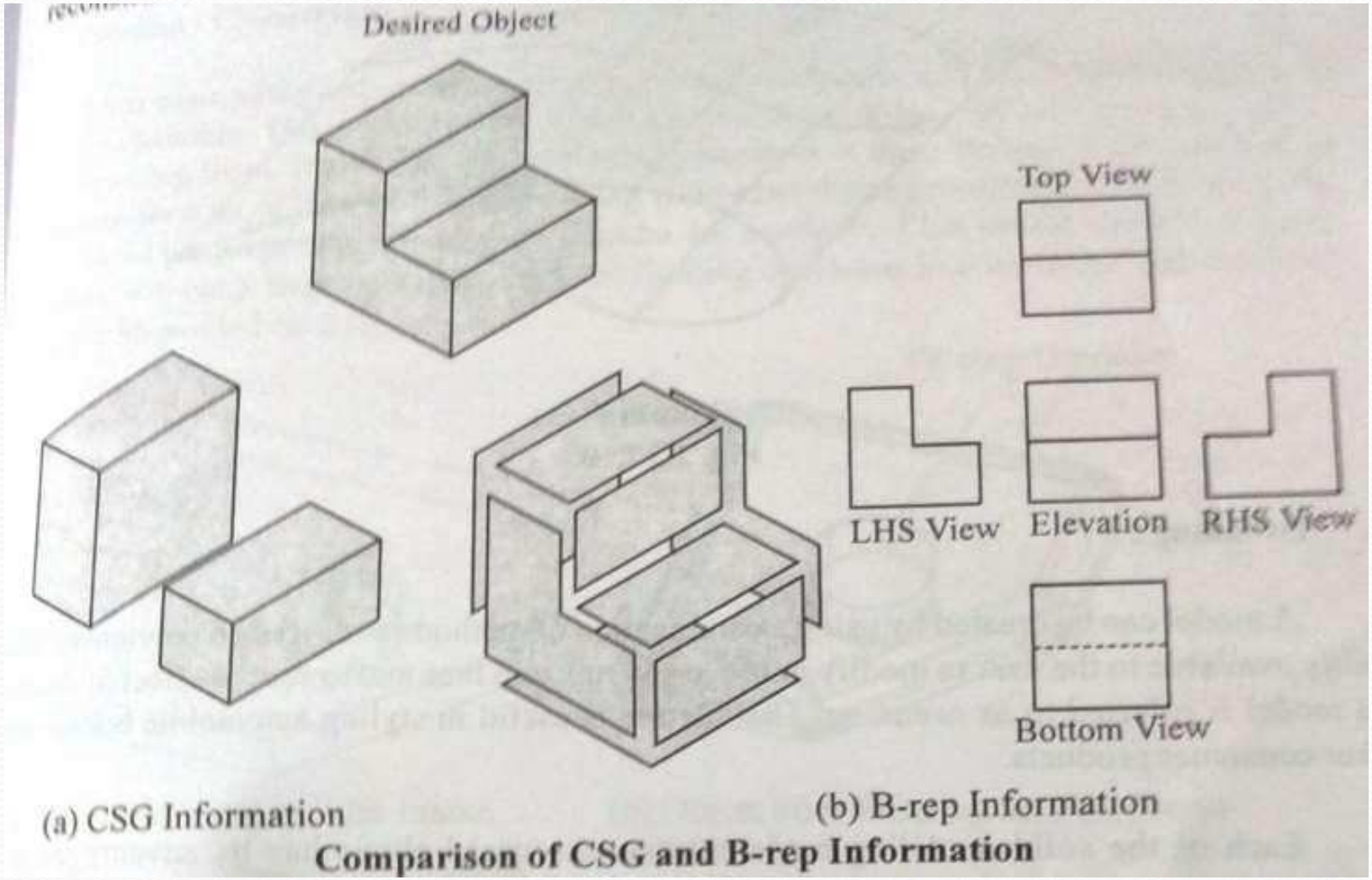

Comparison of CSG and B-rep Information

CSG V/S B-Rep

Sr. No.	Constructive Solid Geometry [CSG or C-Rep] Approach	Boundary Representation [B-Rep] Approach
1.	Using the constructive solid geometry approach, it is easy to create a precise solid model out of the primitives.	The boundary representation approach is useful to model the objects of unusual shapes, which are difficult to be modeled by the CSG approach.
2.	The database of constructive solid geometry model contains configuration parameters of the primitives and the boolean model. This requires less storage space. Thus, CSG system results in more compact file of the model in the database.	The database of boundary representation model contains explicit definition of the model boundaries. This requires more storage space. Thus, B-rep system results in larger file of the model in the database.
3.	The constructive solid geometry approach requires more computations to reproduce the model and its images.	The boundary representation approach requires less computations to reproduce the model and its image.
4.	It is difficult to convert back and forth between a constructive solid geometry model and a corresponding wire-frame model. It is totally like a creation of the new model.	It is relatively easy to convert back and forth between a boundary representation model and a corresponding wire-frame model. This is due to the fact that, the boundary definition is similar to the wire-frame definition. This results in compatibility between the boundary representation and the wire-frame modeling.

3. SWEEPING

- A sweep operation involves
  - An object often called a generator
  - A trajectory along which it is moved

➢ Types of Sweeps:-

1. Linear sweep
2. Non-Linear Sweep
3. Hybrid Sweep

1. **Linear sweep:-**

In extrusion operations, the generating object follows a straight line trajectory perpendicular to the object. Here is an example of an extrusion process. The generating surface is the letter I. It becomes a swept or extruded object when one take that 2-d surface and follows the direction of sweep, or the trajectory line as shown in this picture. After a certain distance, the surface becomes a solid model that looks like the picture here.

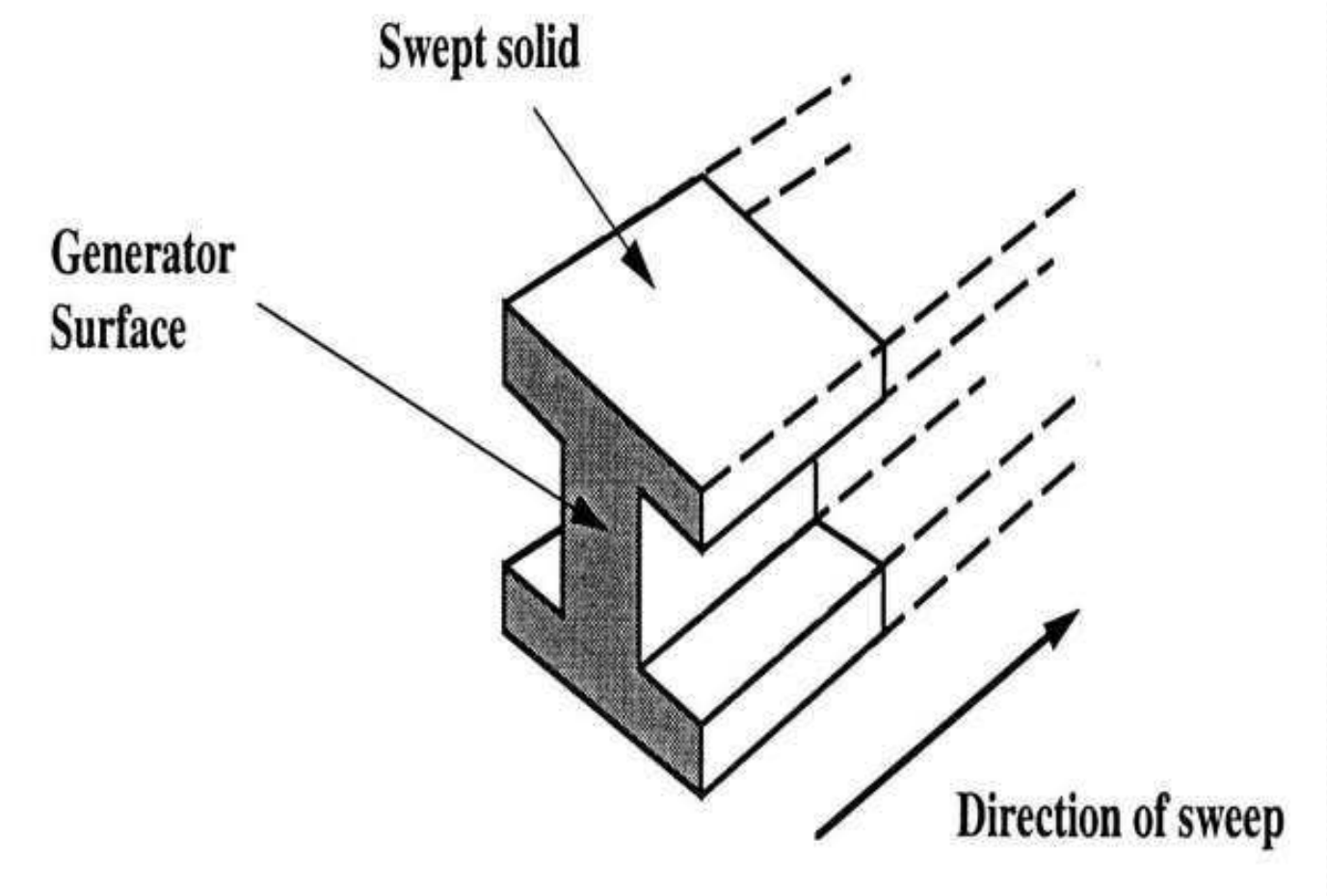

Atmiya University
Rajkot

Rotational Sweep

- Revolved solids are similar to extrusion except that the generator surface is revolved about an axis. An example of the revolve operation is seen here. The 2-dimensional generated surface (the backwards F figure) is revolved around the axis of revolution to create this 3-D shape.
- 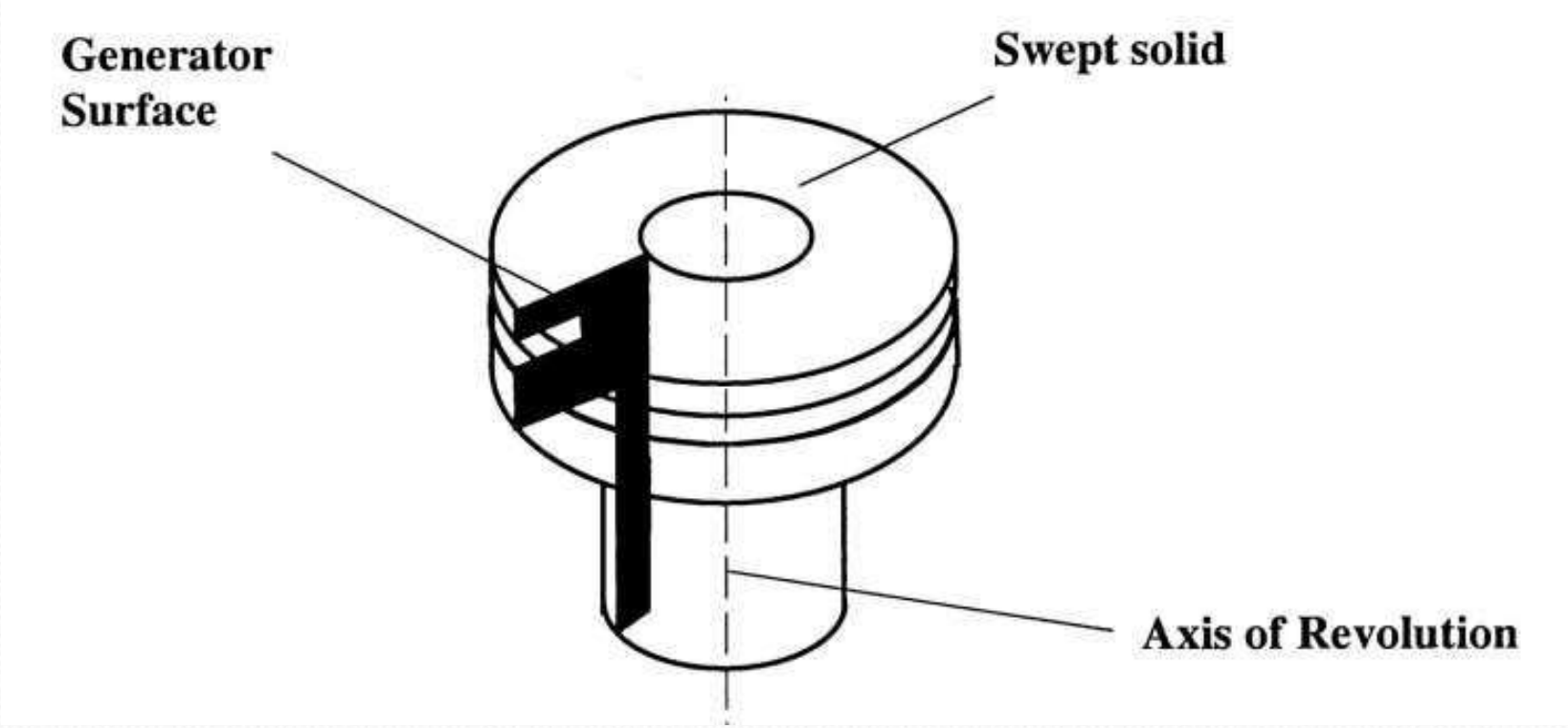

2.Non Linear sweep

- In Non Linear sweep surface or a curve is moved along the curved path as shown in figure.

3. Hybrid sweep

- In a Hybrid sweep the two surfaces are swept in two different directions and then two resulting swept volumes are gluid together to form the object model as shown in figure.

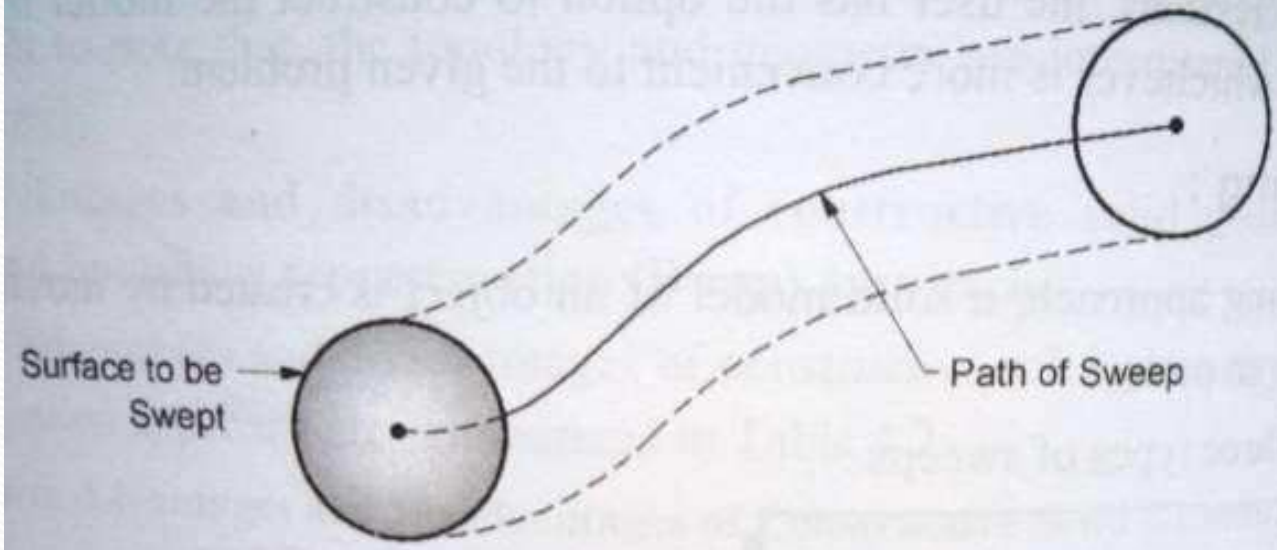

Fig. 4.23 : Non-Linear Sweep

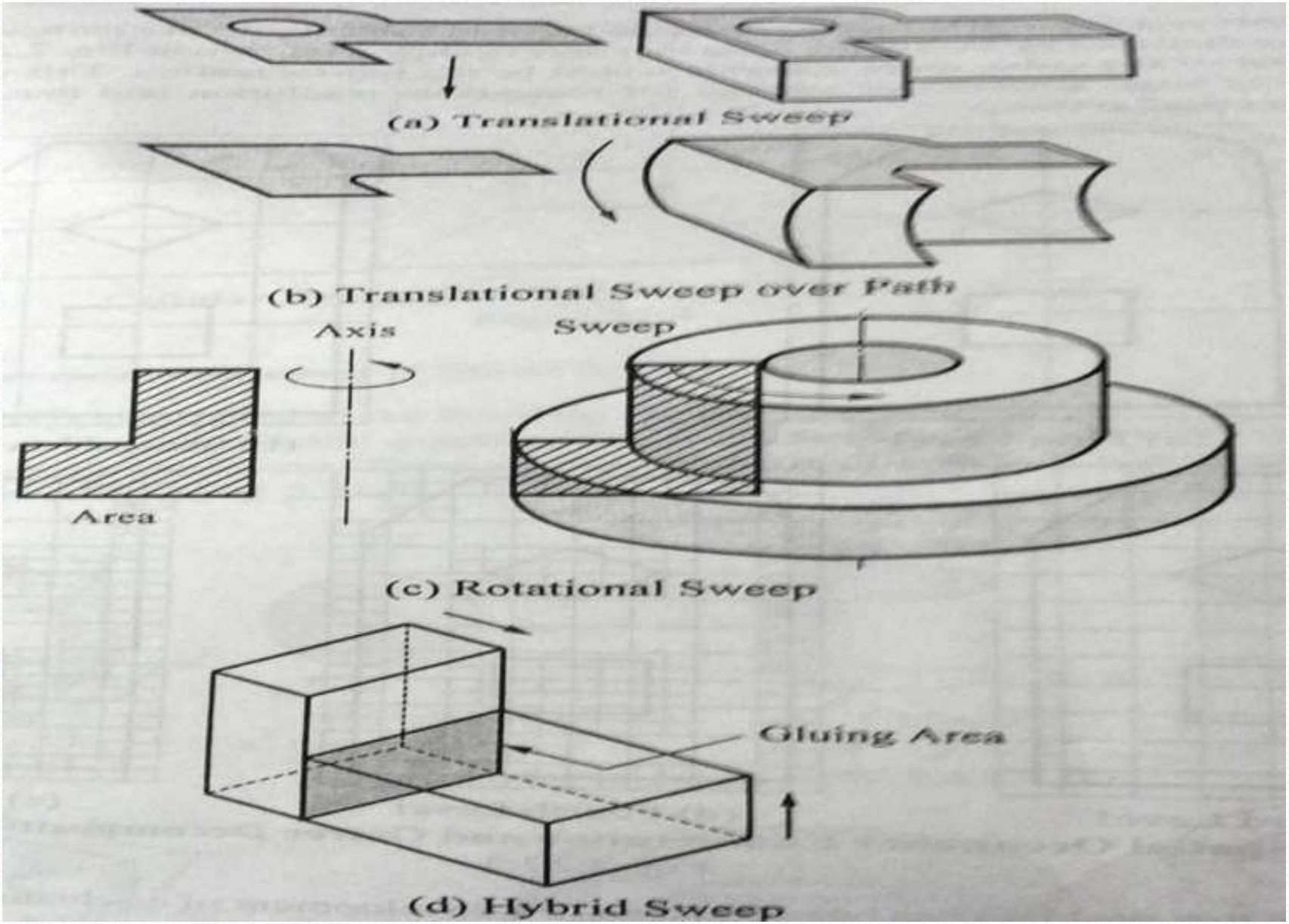
(a) Translational Sweep
(b) Translational Sweep over Path
Axis
Sweep
Area
(c) Rotational Sweep
Gluing Area
(d) Hybrid Sweep

4. Parametric solid modeling

- In a parametric solid modeling the solid objects are described mathematically in a 3D space by the parametric equations.
- The parametric solid modeling was originally developed for the purpose of FEA modeling.
- Parametric solid modeling can be viewed as more of a representation scheme for the design application than for manufacturing applications.

5. Primitive Instancing

- In a primitive instancing approach all the objects that have the same topology are grouped into a family called generic primitive.
- The primitives are defined in terms of parameter group
- For e.g- A block primitive is defined by parameters:Height (H), Width (W), and Depth (D).
- By inputting the values of parameters defining the primitive, the model can be generated.
- In addition to the basic primitives, the library of generic primitives(shapes) which are commonly used is created.

6. Feature Based Modeling

- Feature Based Modeling is most widely used method of creating the solid models.
- It allows the designer to create the complex parts.
- Feature is defined as the combination of shape and operation to build the parts.
- The shape is a 2D sketch. The example of shape are: rectangle, square, triangle, circle, ellipse etc.
- The operation is an activity that converts sketch into a 3D shape.
- The examples of operation are: extrude, revolve, sweep, fillet, chamfer, shell etc.

Steps in feature Based Modeling

1. Create Shapes (sketches)
2. Create features
3. Combine features

- **FEATURE OPERATIONS:-**

1. Extrude
2. Revolve
3. Sweep
4. Loft
5. Shell
6. Fillet
7. Chamfer
8. Hole

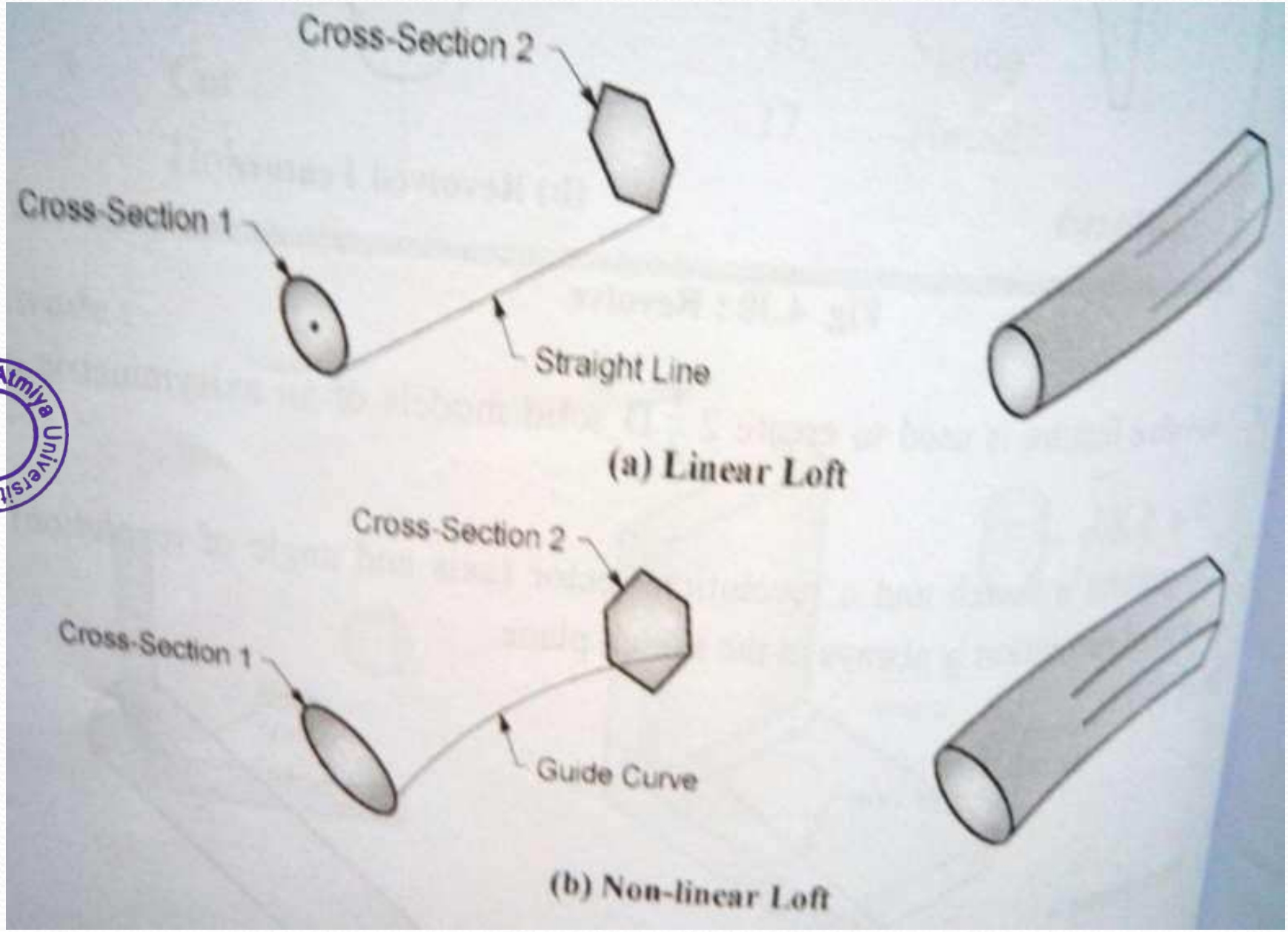

Atmiya University Rajkot

Loft :

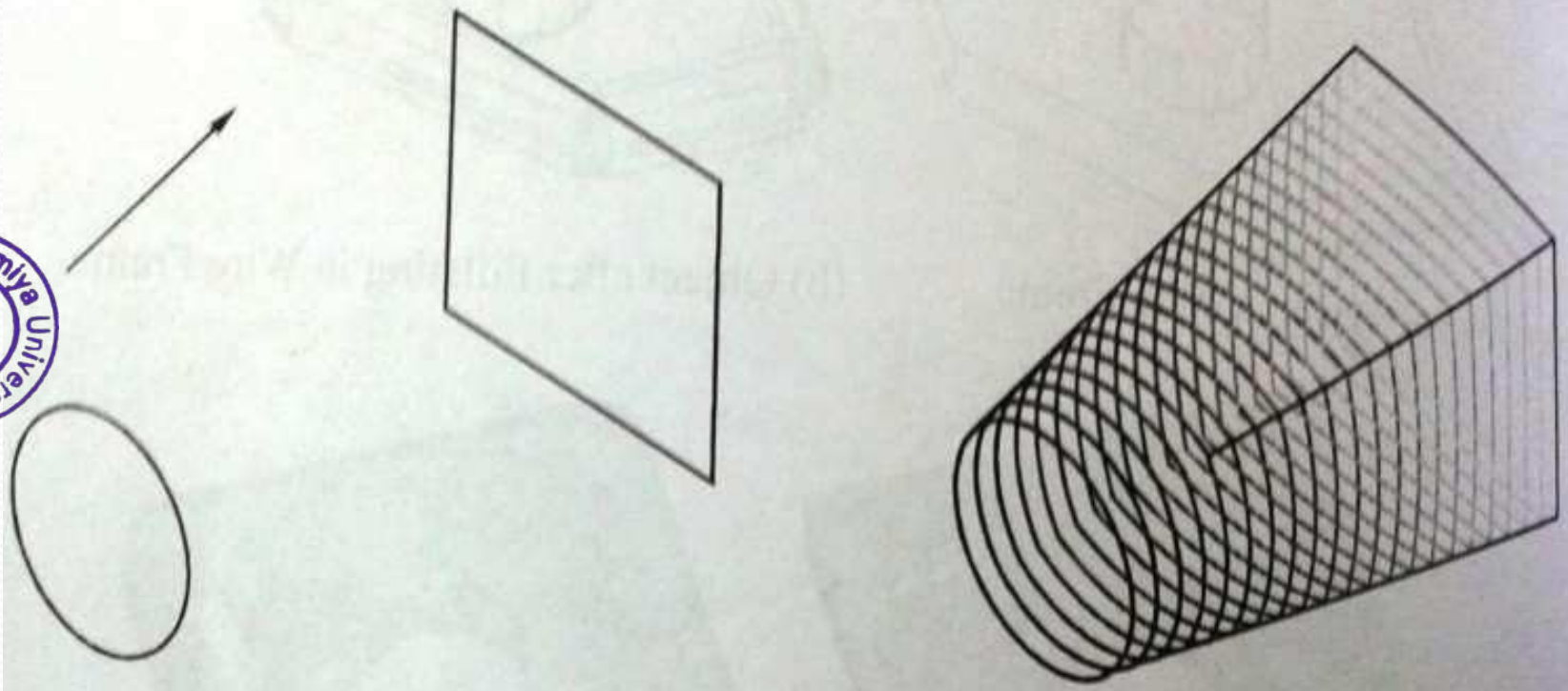

(a) Two shapes to be operated over a given path

(b) Resulting Model

Loft Feature

Atmiya University Rajkot

Shell :

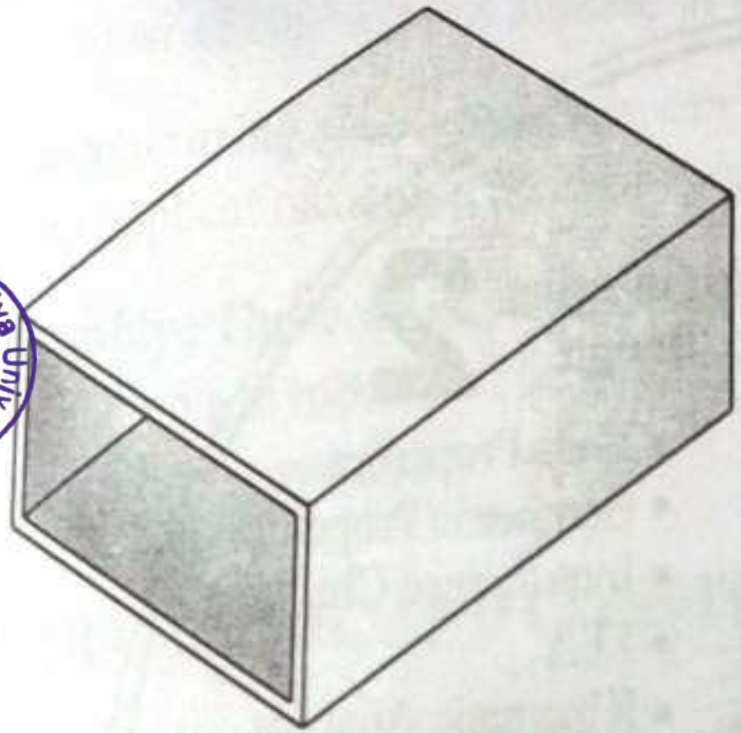

(a) Rectangular Shell

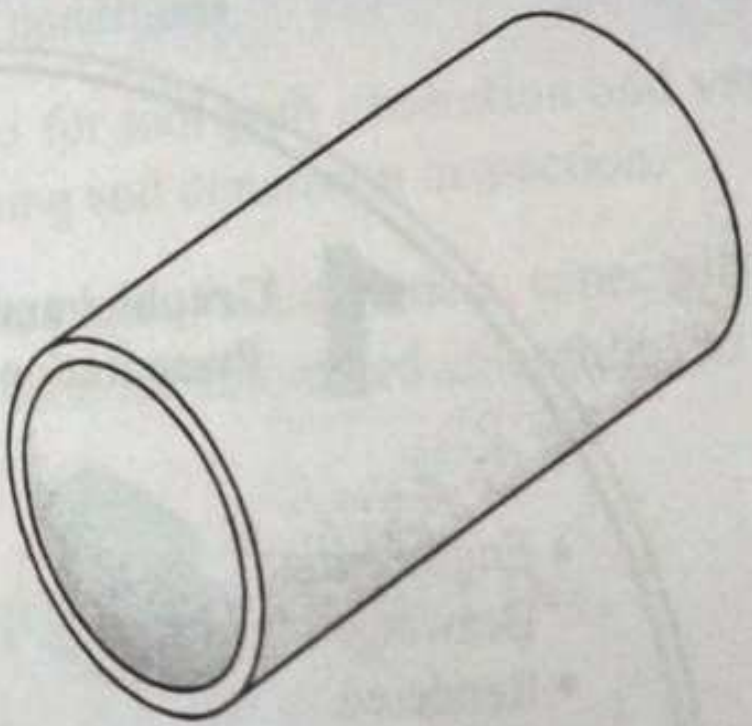

(b) Pipe

Shell Feature

Atmiya University Rajkot

). Boss, Hole, Slot Features :

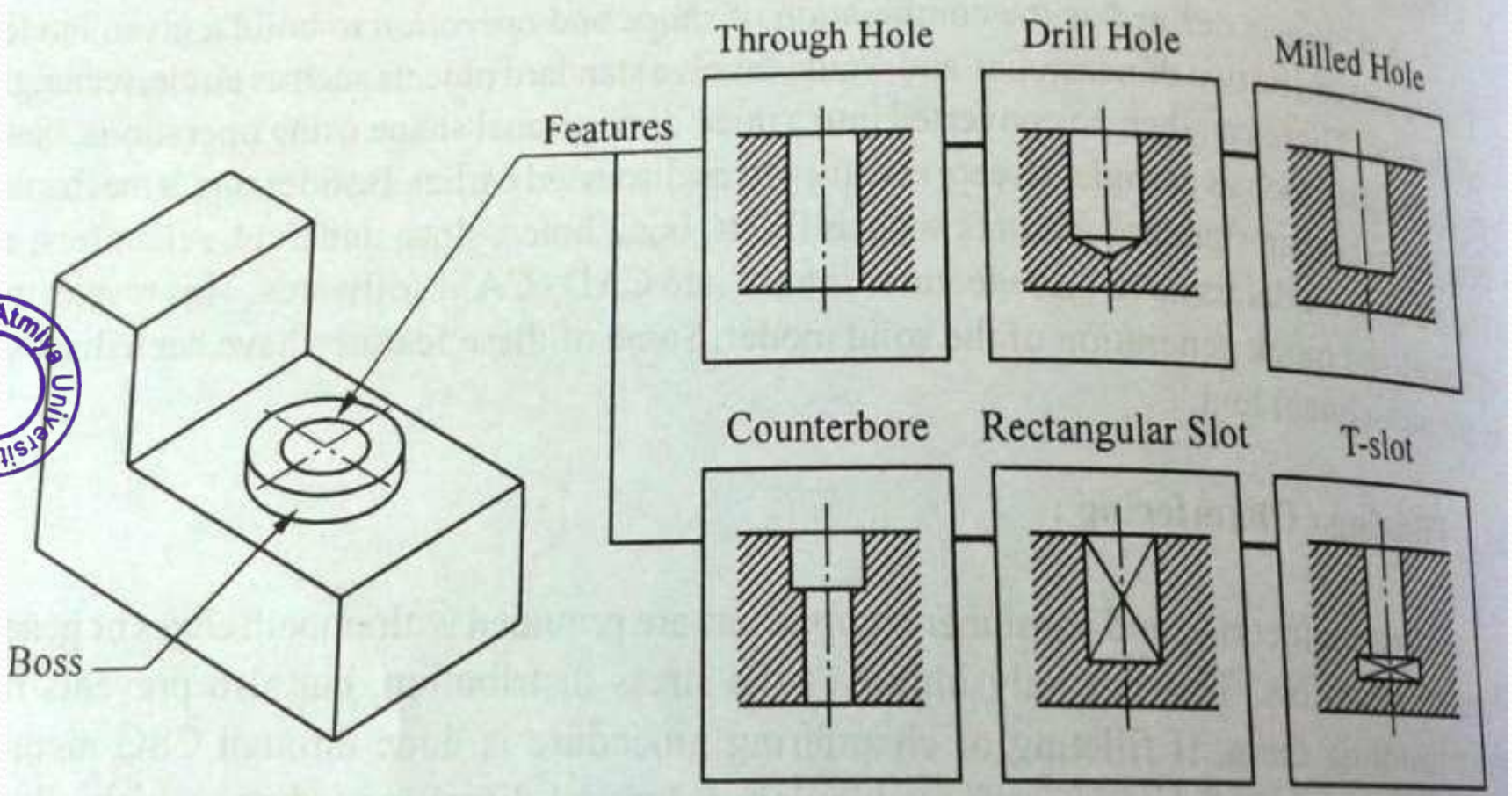

Boss, Hole, Slot Features

Atmiya University Rajkot

SURFACE MODELING

- A surface model is generated by using wire Frame modeling entities or curves (analytic and synthetic).
- A system may require one wire frame entity or curve to create a surface of revolution or it may require two wire frame entities to create the ruled surface.
- The rendering features the asthetic apeal of the object.

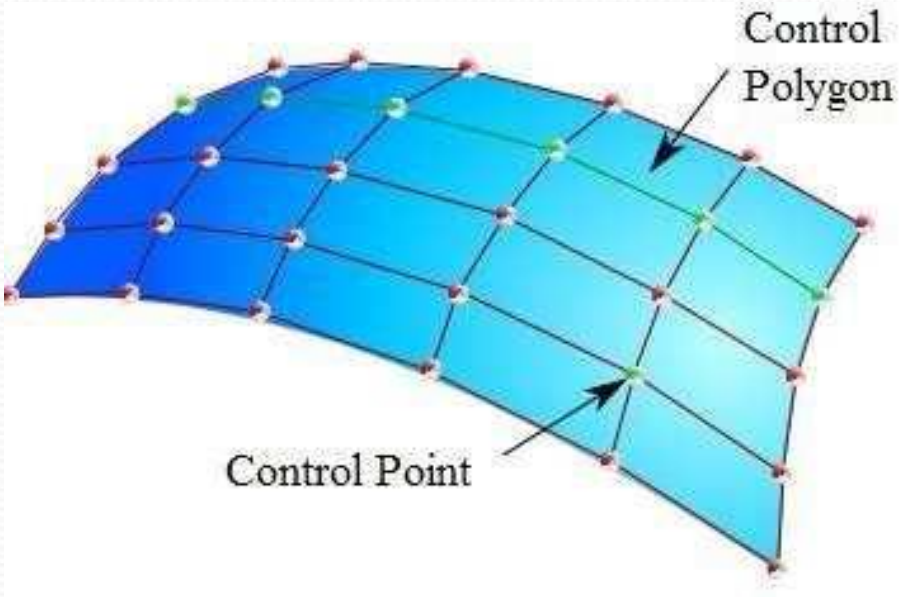

Advantages of Surface Modeling

1. Complex objects such as Automotive bodies, Aircraft bodies, castings, Dies which cannot be modeled by Wire Frame(WF) modeling can be effectively modeled by surface modeling.
2. Provides better visualization compare to WF modeling.
3. Surface model of an object is more complete and less ambiguous than WF modeling.
4. Suitable for Engineering applications such as generating cross sections, interference detections, finite element modeling.
5. Shading of an object is possible in surface modeling.

Limitations of Surface Modeling

I. Models are more complex and hence require more CPU time and computer memory for storage compared to WF models.

II. It requires more training and mathematical background on the part of the user.

Types of surface entities

1. Analytic Surfaces
2. Synthetic Surfaces

- **Analytic Surfaces:-** The surface entities which are defined by the analytical equations are known as analytic surfaces.
- e.g- plane surface, ruled surface, tabulated surface, and surface of revolution.
- **Synthetic Surfaces:-** The surface entities which are defined by the set of data points are known as synthetic surfaces.
- The synthetic surfaces are needed when a surface is represented by a set of data points.

Atmiya University
Rajkot

Atmiya University, Rajkot
Faculty of Engineering & Technology

Department of Mechanical Engineering

Prepared by: Shivang S. Jani

Course: Computer Aided Design(21BTMECC601)

Module I: Introduction

INTRODUCTION TO CAD/CAM

- The rapid developments in the field of computers in the past four decades can be undoubtedly considered as the single most significant contributing factor responsible for the boost in the technological developments.
- The computer has entered each and every field and had become the most important tool in all the technological areas including design and manufacturing.
- **CAD/CAM** is a term which means Computer Aided Design and Computer Aided Manufacturing.
- It is the technology concerned with the use of digital computers to perform certain functions in design and production.
- The computer systems consist of the **hardware and software** to perform the specialized design functions required by the particular user firm.

Atmiya University
Rajkot

Computer-Aided Design (CAD)

- Use of computer systems to assist in the creation, modification, analysis, and optimization of a design.

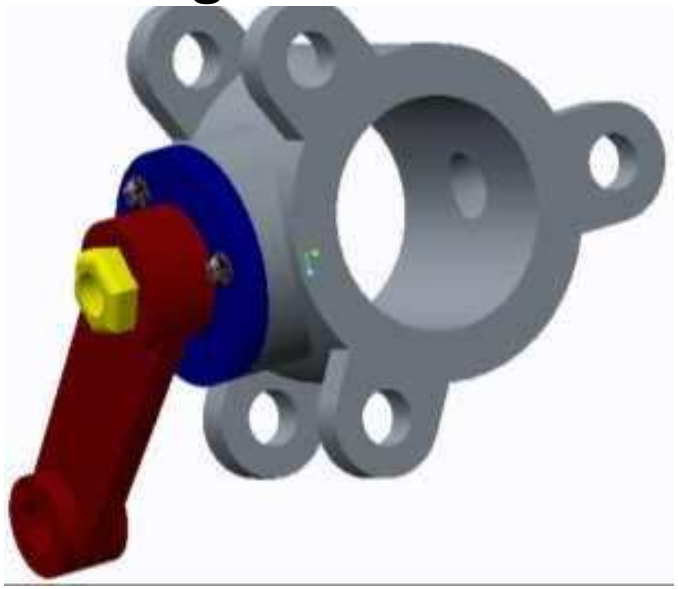

- Typical tools:
  - Tolerance analysis
  - Mass property calculations
  - Finite-element modeling and visualization
- Defines the geometry of the design.

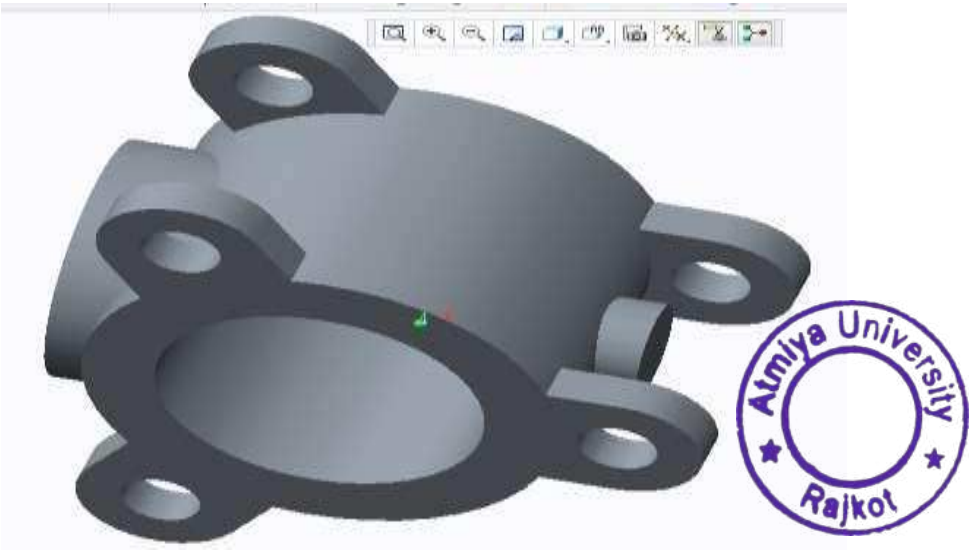

Atmiya University
Rajkot

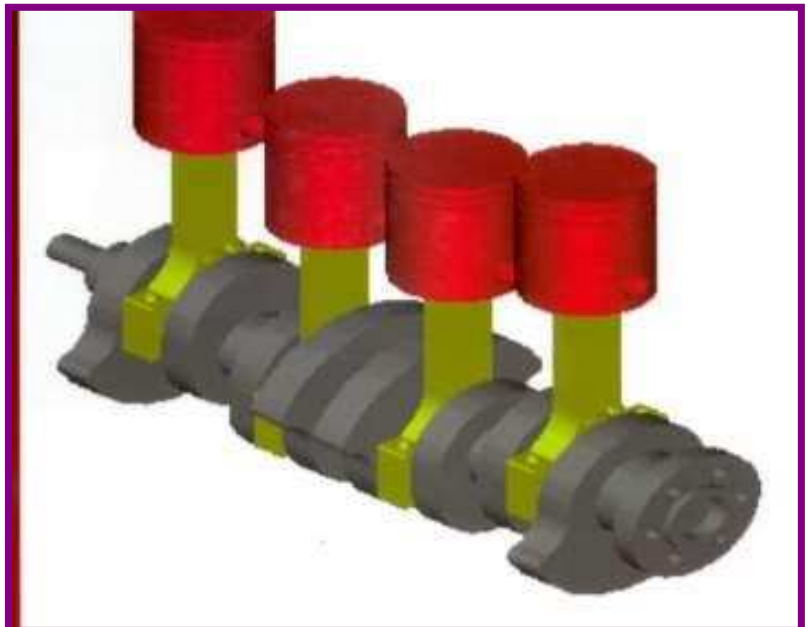

Computer-Aided Manufacturing (CAM)

- Computer aided manufacturing (CAM) can be defined as the use of computer systems to plan, manage, and control the operations of a manufacturing operation through either direct or indirect computer interface with the manufacturing machine.

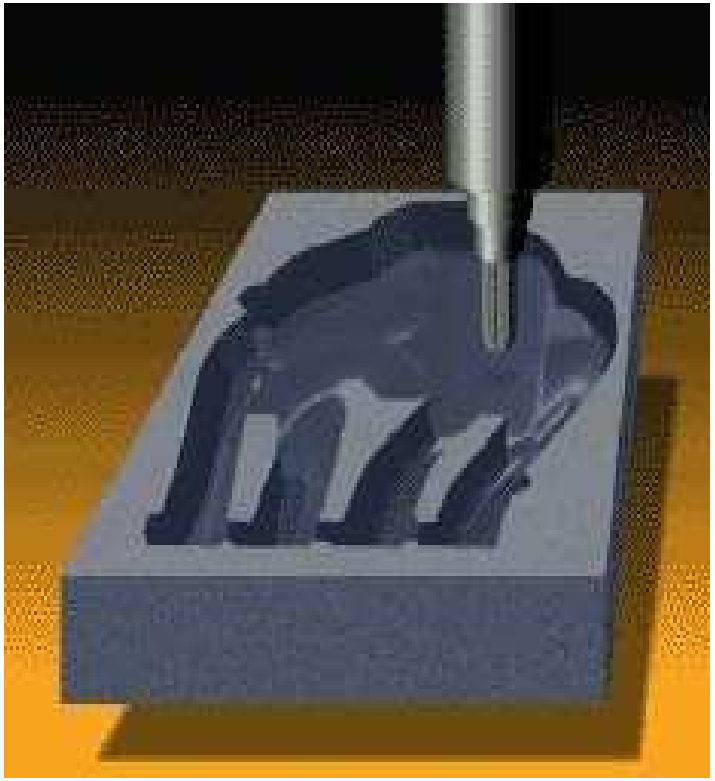

Atmiya University Rajkot

Computer-Aided Engineering (CAE)

- Use of computer systems to analyze CAD geometry
- Allows designer to simulate and study how the product will behave, allowing for optimization
- Finite-Element Method (FEM)
  - Divides model into interconnected elements
  - Solve continuous field problems

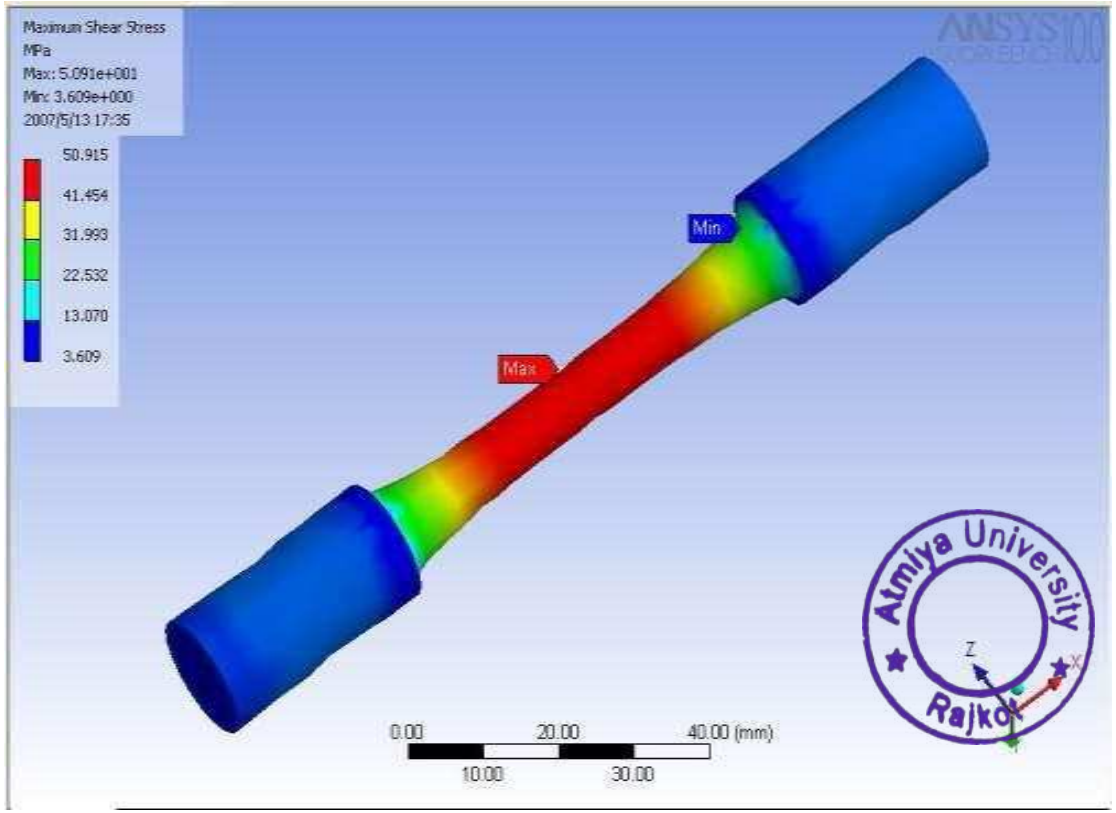

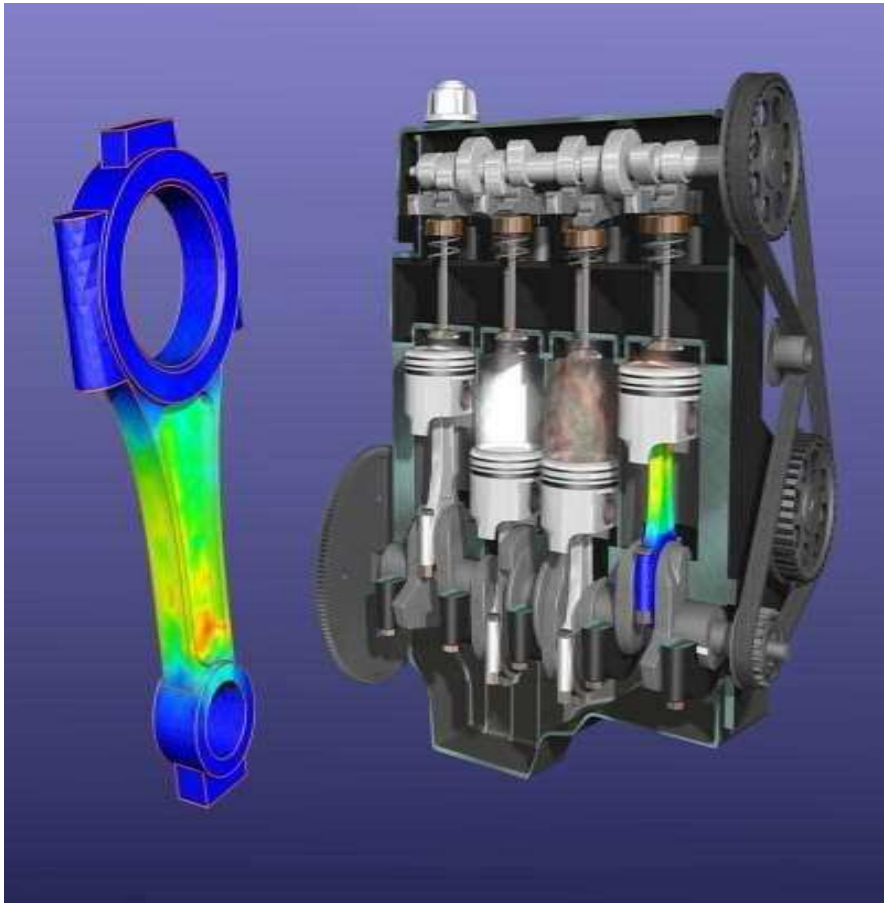

ADVANTAGES OF CAD/CAM OR REASONS FOR IMPLEMENTING CAD/CAM

- ✓ In a CAD System, more no. of alternative designs can be checked for suitability. This results in better optimization of the design. Hence, the CAD system improves the quality of design.
- ✓ In a CAD system, as the calculations are performed by computer, the approximations can be minimized. This results in the accuracy of design.
- ✓ Ina CAD, all the time consuming and iterative phases of the design process are carried out on the computer. Therefore, the time required for the design is reduced drastically.
- ✓ The CAD system reduces the engineering personnel requirements.

Atmiya University Rajkot

- ✓ In a CAD system as the model of the object is available in the computer database, the modifications are easier to make.
- ✓ The CAD eliminates the prototype testing, which is costly and time consuming. It is replaced by simulation on the computer.
- ✓ In a CAD, the manufacturing drawings can be generated automatically.
- ✓ The CAM system generates a complete tool path required for the automatic manufacturing.
- ✓ The CAM system can use Computer Aided Process Planning (CAPP) and Computer Aided Production Planning (CAPP). This results in effective planning and hence reduces the manufacturing time.
- ✓ The CAM system can use on-line automatic inspection. This results in better production quality.

Atmiya University Rajkot

LIMITATIONS OF CAD/CAM

- The cost of hardware and software used in CAD/CAM is high.
- Highly trained manpower is required to operate CAD/CAM systems.

Atmiya University
Rajkot

The General Design Process or Conventional Design Process

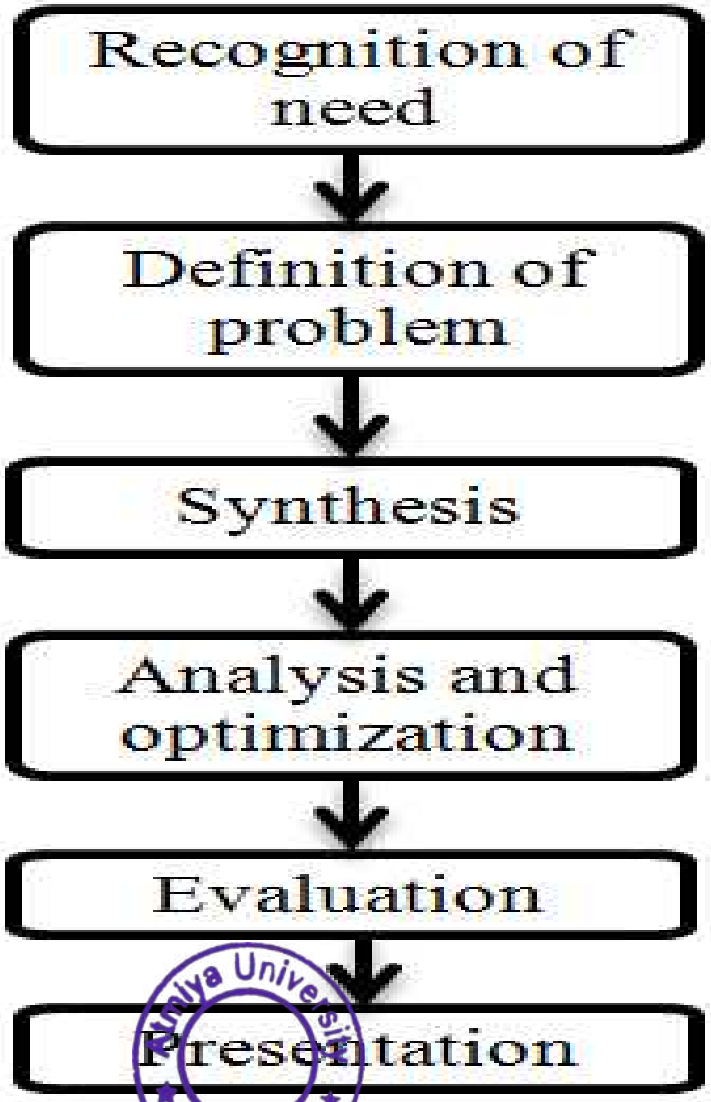

Atmiya University Rajkot

There are six steps involved in the conventional design process as discussed below:

1. **Recognition of need**

- The first step in the designing process is to recognize necessity of that particular design.
- The condition under which the part is going to operate and the operation of part in that particular environment.
- The real problem is identified by knowing the history and difficulties faced in system.

2. **Definition of problem**

Atmiya University Rajkot

- The design involves type of shape of part, its space requirement, the material restrictions and the condition under which the part has to operate.
- The basic purpose of design process has to be known before starting the design.
- A problem may be design of a simple part or complex part.
- It may be problem on optimizing certain parameters.

3. **Synthesis of design**

- In this, it may be necessary to prepare a rough drawing of design part.
- The type of loading conditions imposed on the parts.

- The type of shapes which the part section can require and approximate dimension at which the different forces are located has to be provided on the sketch of part.
- The stresses to which the part is likely to be subjected must be analyzed and relevant formulas should be prepared.
- A mathematical model of design may be prepared to synthesize the parts of design.

4. Analysis and optimization

- The design can be analyzed for the type of loading condition as well as the geometric shape of the part.
- In the first stage it will be necessary to check the design of the part for safe stresses.
- If it is not satisfactory, then the dimensions of the part can be recalculated.
- The part can further be optimized for acquiring minimum dimensions, weight, volume, efficiency of the material and cost.
- The optimization depends on the definition of the problem and importance of a parameter.
- It may be sometimes necessary to optimize the parts for certain operating parameters like efficiency, torque, etc.

Rajkot University

5. **Evaluation**

- It is concerned with measuring the design against the specifications established in the problem definition phase.
- The evaluation often requires the fabrication and testing of model to assess operating performance, quality and reliability.

6. **Presentation**

- The design of component must be presented along with necessary drawings in an
- The presentation of the design can be made by use of colors and attractive presentation.

Atmiya University Rajkot

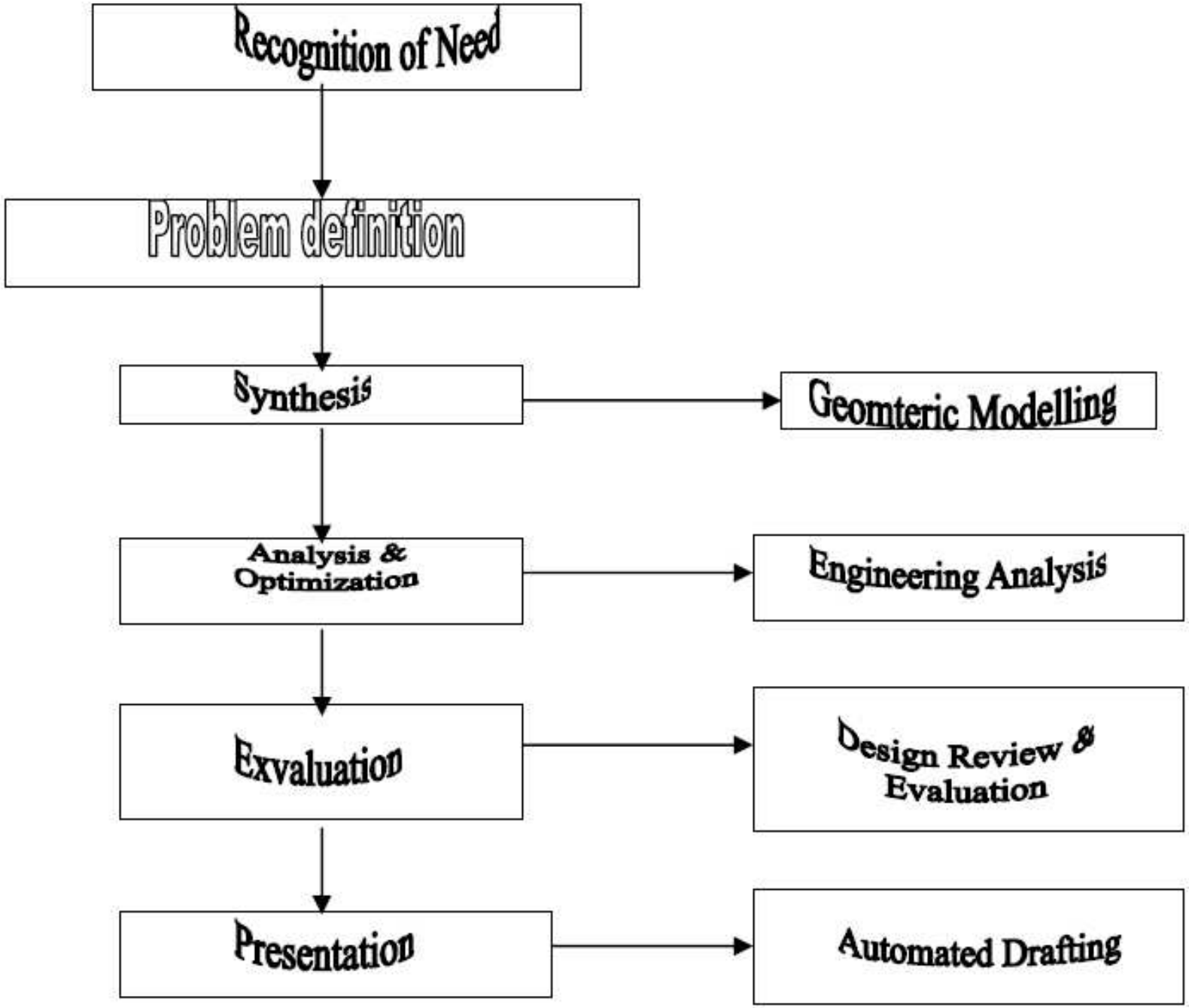

Atmiya University Rajkot

Computers in Design .

1. **Geometric modeling**

- Geometric modeling is concerned with the computer compatible mathematical description of the geometry of an object.
- The mathematical description allows the image of the object to be displayed and manipulated on a graphics terminal through signals from the CPU of CAD system.
- The software that provides geometric modeling capabilities must be designed for efficient use both by the computer and human designer.
- The basic form uses wire frames to represent the object.
- The most advanced method of geometric modeling is solid modeling in three dimensions.

Atmiya University Rajkot

2. **Engineering Analysis**

- The analysis may involve stress-strain calculations, heat transfer computation etc.
- The analysis of mass properties is the analysis feature of CAD system that has probably the widest application.
- It provides properties of solid object being analyzed, such as surface area, weight, volume, center of gravity and moment of inertia.
- The most powerful analysis feature of CAD system is the finite element method.

3. **Design Review & Analysis**

- A procedure for design review is interference checking.
- This involves the analysis of an assembled structure in which there is a risk that the components of the assembly may occupy same space.
- Most interesting evaluation features available on some CAD systems is kinematics.
- The available kinematics packages provide the capabilities to animate the motion of simple designed mechanisms such as hinged components and linkages.

4. **Automated Drafting**

- This feature includes automatic dimensioning, generation of cross-hatched areas, scaling of the drawing and the capability to develop sectional views and enlarged views of particular part details.

Atmiya University Rajkot

CONVENTIONAL DESIGN V/S CAD

- Conventional design process involves calculation and estimation of dimensions of component using design equations and relations.
- Whereas using CAD, we can make programs for the design of components. The design program can be made in any of the available language which will give the desired output for given input data.
- In conventional design Process, the design is analyzed and evaluated using various constraint equations. If the design fails during analysis and evaluation, the input and assumptions made during design should be changed and the whole design process is repeated for the new input parameters.

Atmiya University Rajkot

- For components having complex geometry, the manual analysis, optimization and evaluation of design using constraints is time consuming and very length work.
- Computer Aided Design allows analysis and optimization of design through various factory made solvers available in CAD softwares. The commercially available CAD solvers allows the designer to analyze the component using various constraint conditions. CAD may include FEA for stress, vibration and heat transfer analysis, Computational Fluid Dynamics programs for fluid flow analysis and mathematical solvers like MathCad , Matlab etc.
- In conventional method, the presentation of component drawings is limited to very few orthographic and isometric views. It is very difficult to prepare assembly and sub-assembly drawings on drawing sheet.

Atmiya University Rajkot

- CAD allows 3D design from which two-dimensional orthographic views with automatic dimensioning can be produced very easily with no extra time. The geometric model generated during design is used by computer aided drafting software. Sectional views, assembly and detail drawings are produced very easily with any scale.

Atmiya University
Rajkot

Benefits of CAD

- Improvement in Productivity.
- Reduction in Lead time
- Modification in Design is very easy.
- More understandable Design
- Create design & manufacturing Data Base for Future.
- Elimination of expensive testing by Simulation method.
- Analysis of Complex Geometry is easier.
- Standardization of design, drafting and documentation.
- Better communication between design production department.
- Customer modifications are easier to make.
- Faster response to requests for quotation

Atmiya University
Rajkot

Use of CAD

- CAD is used to design a variety of different products in variety of fields such as:-
- ✓ Architecture
- ✓ Electronics
- ✓ Automotive engineering
- ✓ Industrial Design
- ✓ Machinery
- ✓ Visual Art
- ✓ Medical Design

Atmiya University
Rajkot

Limitation of CAD

- The system Requires large memory and speed.
- The size of software package is large.
- It requires highly skilled personal to perform the work.
- It requires very large investment.

Atmiya University
Rajkot

Application of CAD in Engg. field

- **Geometric Modeling**:- Geometric Modeling software are used for generating 2D as well as 3D models of components, assemblies and systems.
- **FEA (Finite Element Analysis)**:- FEA software are used for stress strain Analysis, Thermal Analysis, Vibration Analysis etc.
- **Simulation**:- Simulation software are used for evaluation of engineering system
- **Automated Drafting**:- The automated drafting feature in CAD creates the 2D drawing directly from geometric model.

Atmiya University
Rajkot

Conventional Product Cycle without CAD/CAM

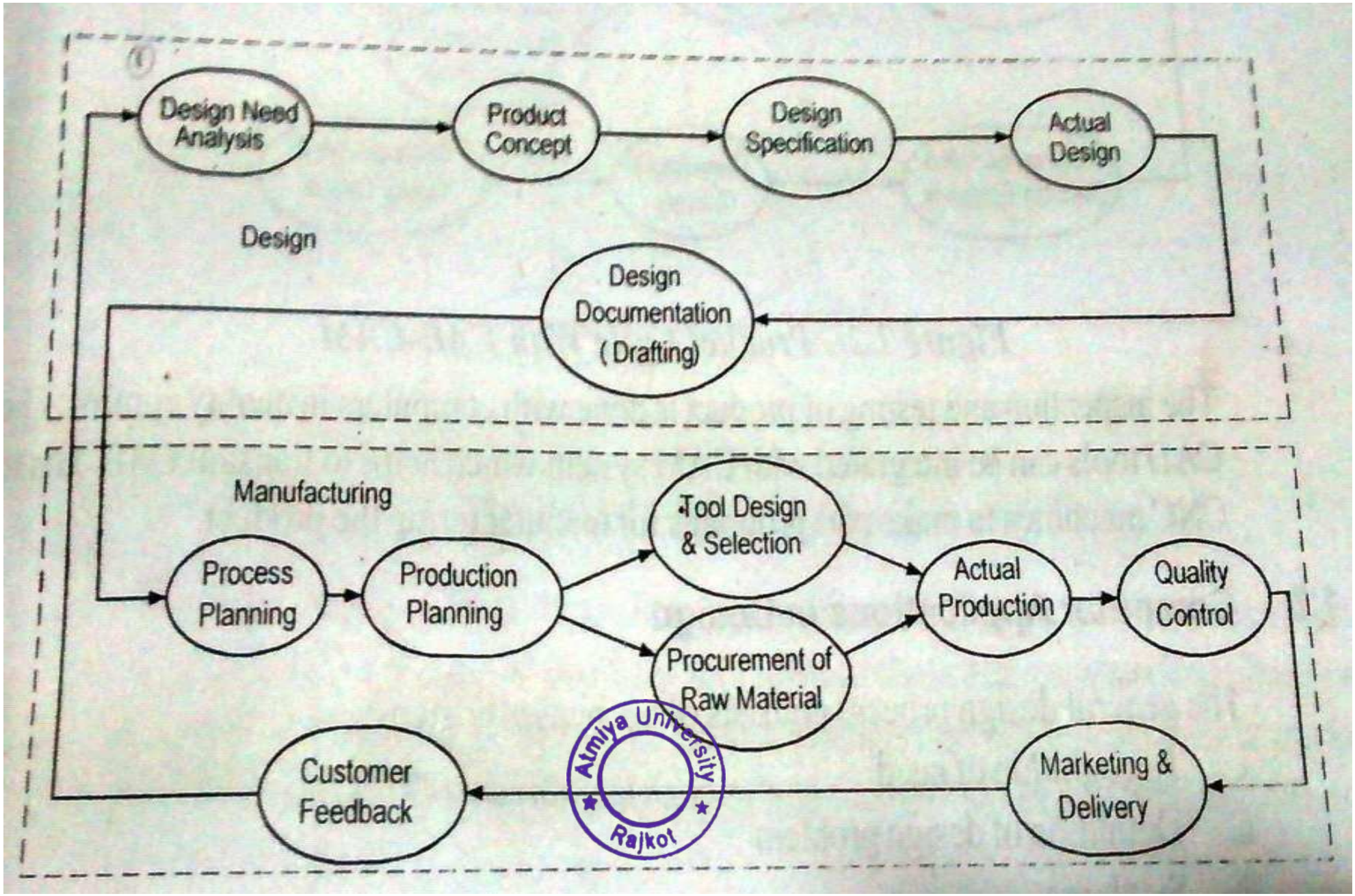

Product Cycle with CAD/CAM

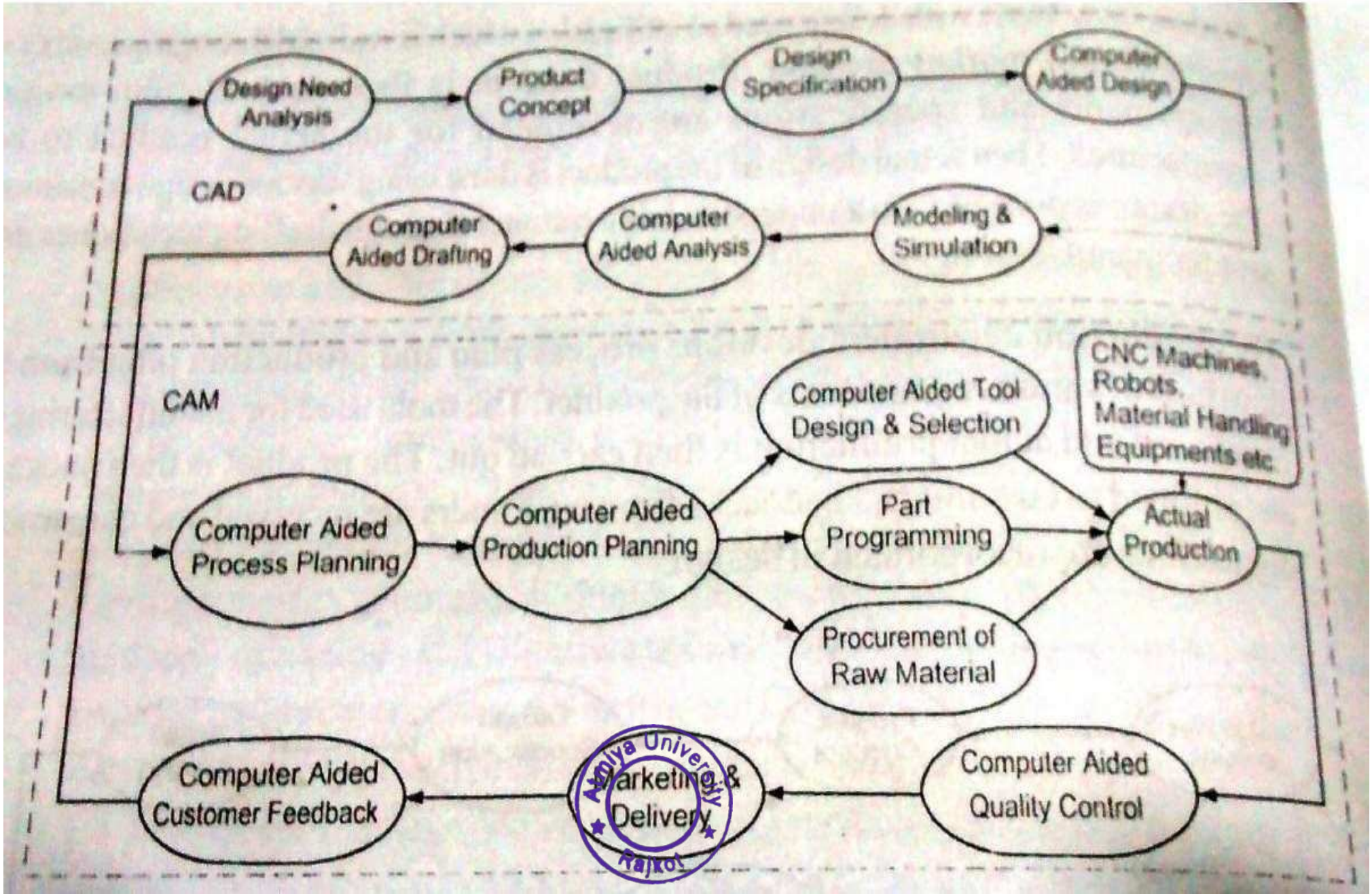

CAD/CAM System Evaluation Criteria

- The evaluation and selection of CAD/CAM system for a given application is the first and one of the most important steps in CAD/CAM implementation.
- It involves selection of hardware and software , which should be compatible with each other.
- Now-a-days, with a large number of options for the hardware and software, it is really a difficult task to select an appropriate CAD/CAM system to suit requirement of the particular application.
- The following categories of criteria are considered while evaluating the CAD/CAM system for a given application.

✓ Hardware Criteria

✓ Software Criteria

✓ Organization related Criteria

Atmiya University Rajkot

Hardware Criteria

- Some of the hardware related criteria considered while selecting the CAD/CAM system are as follows:-

1) Hardware architecture
2) Speed of hardware system
3) Graphics capability of hardware system
4) Compactness of hardware system
5) Cost of hardware system
6) Flexibility of hardware system for upgradation
7) Ease of maintenance of hardware system
8) Compatibility of hardware system with CAD/CAM software

Atmiya University Rajkot

Software Criteria

- Some of the software related criteria considered while selecting the CAD/CAM system are as follows:-

1) Operating system requires
2) Interfacing of different modules of software i.e modelling software, analysis software and manufacturing software
3) Ease of data transfer between different modules of software
4) User friendliness of software system
5) Capabilities and features of software
6) Ease of maintenance of software
7) Flexibility of software for upgradation
8) Compatibility of software with hardware system

Atmiya University Rajkot

Organization related Criteria

- Some of the organization related criteria considered while selecting the CAD/CAM system are as follows:-

1) Cost of CAD/CAM system
2) Suitability of the system for the given application
3) Support and service available
4) Technical experty available with the organization
5) Training facilities required and available with the organization
6) Rating of the CAD/CAM system in industry

Atmiya University Rajkot

Hardware in CAD

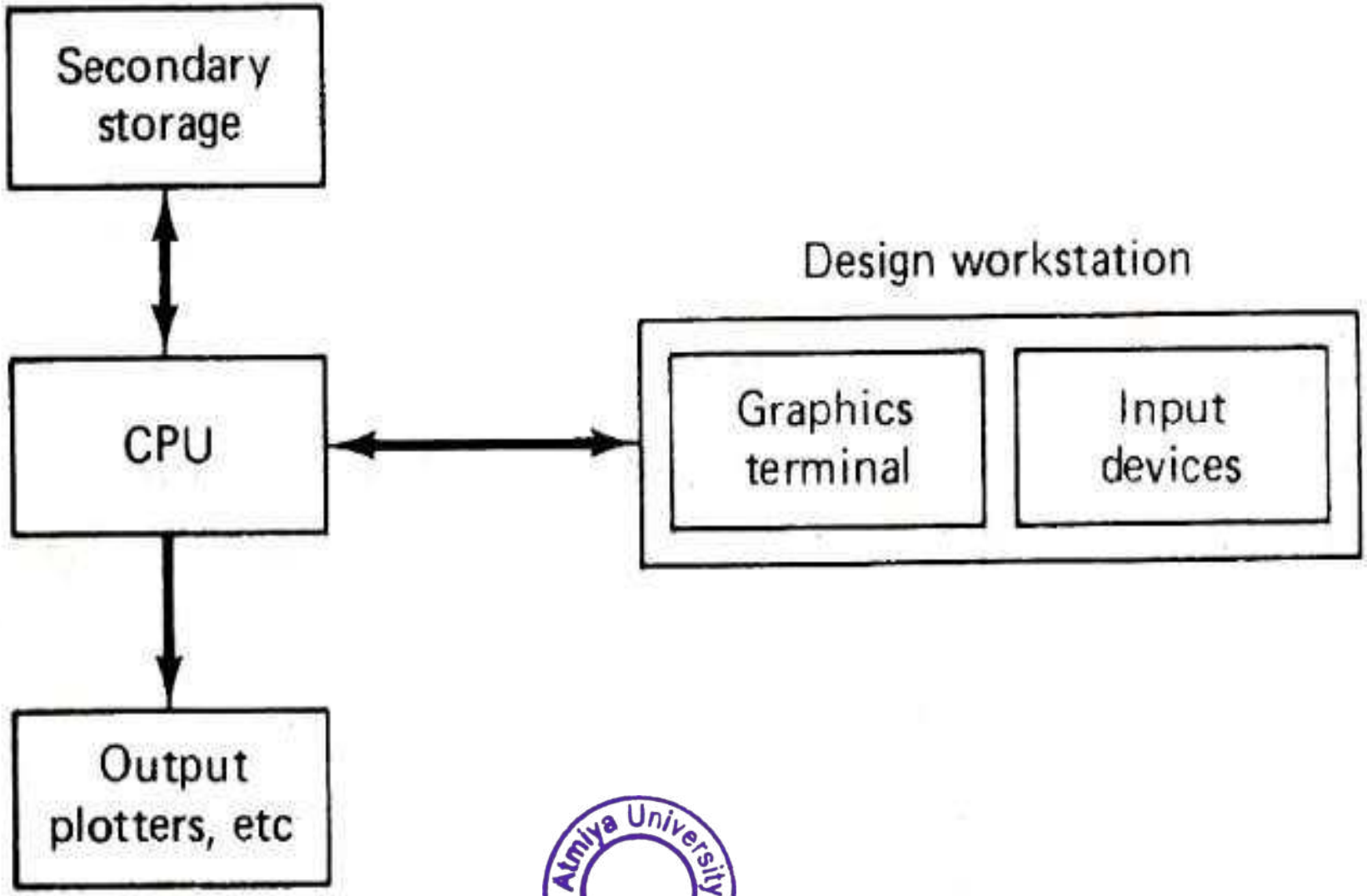

Atmiya University Rajkot

CPU:-

- It is the brain of the system
- The function of CPU is to receive the information from workstation and display the output on the CRT screen
- To read the data stored in secondary memory storage unit
- Function of Secondary Memory:-

1) To store the files related to engineering drawing
2) To store the programes required to give instruction to output devices like plotters etc.
3) To store CAD software
4) The secondary storage units consist of magnetic tapes and discs

Atmiya University Rajkot

Design Workstation Criteria

- It must interface with the central processing unit.
- It must generate a steady graphic image for the user.
- It must provide digital descriptions of the graphic image.
- It must translate computer commands into operating functions.
- It must facilitate communication between the user and the system.

Atmiya University
Rajkot

Technical Specification of CAD workstation

CAD applications require workstations with reasonably enhanced processing speed, graphic capability, and storage capacity. Typical workstation specifications of some of the currently available models are given below.

Processor:	Intel Pentium 4 at 2.4 GHz
RAM:	2 GB to 16 GB
PCI bus width:	64 – bit
Hard drive:	500 GB to 1 TB
CD-ROM:	CD-RW/DVD Combo
Standard I/O ports:	1 Serial port, 1 Parallel port, 4 USB ports
Graphics:	NVIDIA 512 MB
Graphics Resolution:	2018 x 1536 (Max)
Operating System:	Windows XP, Windows 7
Monitor:	21" Flat Panel TFT display
Keyboard:	Enhanced Multimedia USB
Mouse:	Optical Mouse Two-button Scroll Mouse

Atmiya University Rajkot

CAD WORKSTATION

- CAD operator communicates with CAD system through work station.

The components of workstation are:-

1. Graphics Display Terminal
2. Input Devices

Graphics Display Terminal:-

- Graphics display terminal displays the output graphical image or animated videos of the components which is designed by CAD system.
- It is important component of work station as the output resolution of image affects the perception of design.
- Based on various technologies, many display systems are available.

1. Cathode Ray Tube (CRT)
2. Liquid Crystal Display (LCD)
3. Light Emitting Diode (LED)

Atmiya University Rajkot

CATHODE RAY TUBE (CRT)

- Most interactive computer graphics display system are based on CRT principal.
- The basic arrangement of components of CRT is shown in figure.

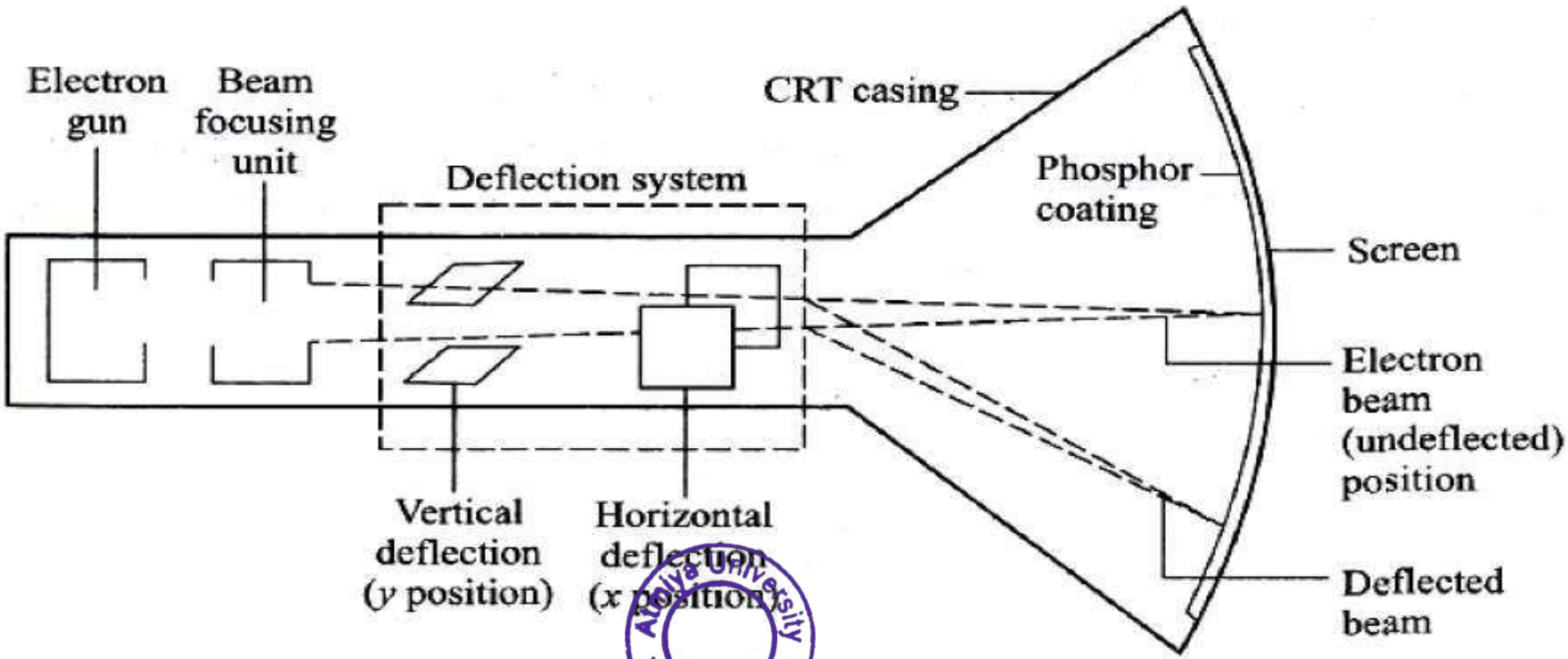

Atmiya University Rajkot

Principle of CRT

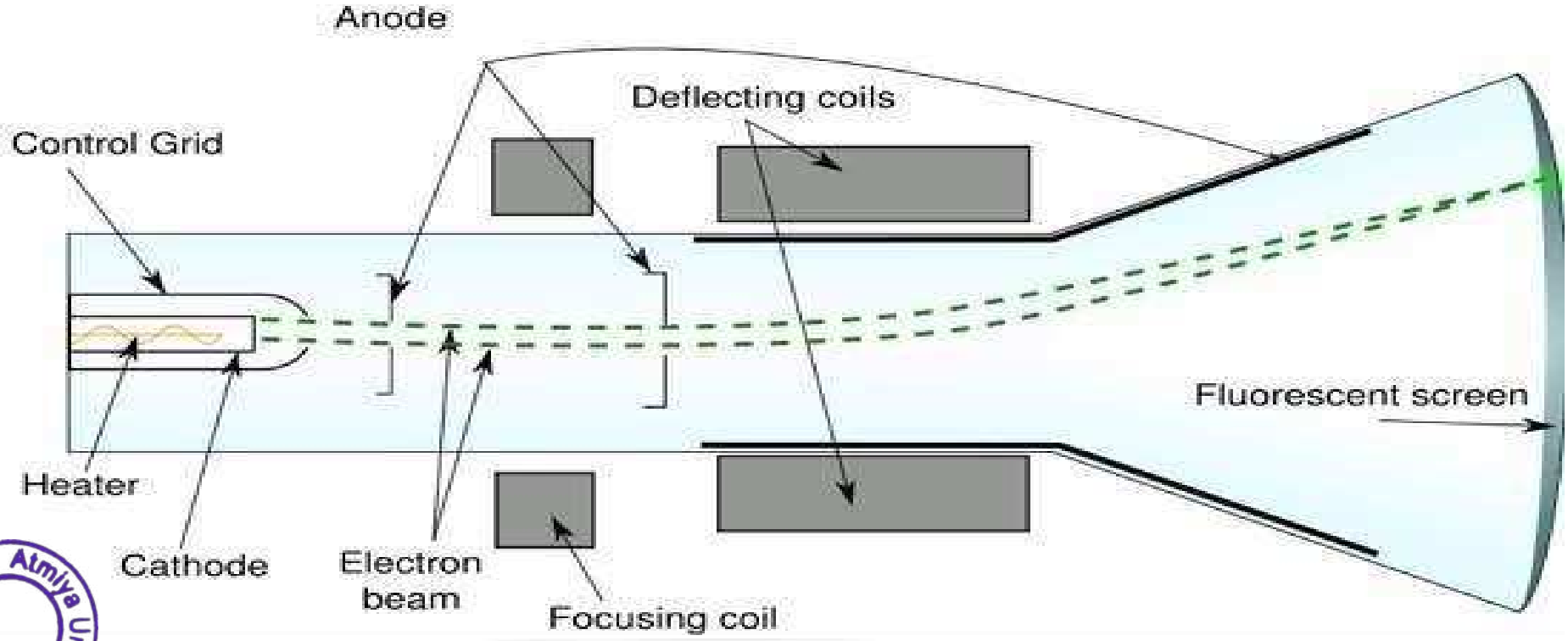

Atmiya University Rajkot
Atmiya University Rajkot

Atmiya University Rajkot
Atmiya University Rajkot

- It is consisted of an enclosed glass tube in which the electron beam is produced by electron gun (cathode).
- The electron beam is then deflected and focused at specific location on fluorescent screen which is phosphor coated. The phosphor coated screen is then emits light where electron beam is impinged.
- Electron gun has two components:- Cathode & Control Grid
- The electric current is passed through the filament of heating coil which supplies heat to cathode.
- The heated Cathode then emits electrons.
- Control grid controls the intensity of electron beam generated that emits electrons.
- Control Grid controls the intensity of electron beam generated by cathode by which we can vary the brightness of display on screen.

Atmiya University Rajkot

- The focusing coils are positively charged metal cylinder that forms an electrostatic lens.
- The focusing of electron beam is done by focusing coil.
- The deflection system consists of magnetic coils.
- The electron beam is deflected in particular direction by setting the direction and magnitude of magnetic field.
- The screen is phosphor coated.
- When the electron beam is impinged on screen, the kinetic energy of electrons excites phosphor electrons.
- The excited phosphor electrons then emit quantum of light and returns back to their ground state energy level.

Atmiya University
Rajkot

LIQUID CRYSTAL DISPLAY(LCD)

- The LCD are used in wide range of applications such as television, computer monitors, machine control panels, gaming devices, calculators and telephones.
- LCD have displaced CRT in many applications.
- Their Full screen size with reasonably low power consumption has made them suitable for portability.
- Another advantage is that they occupy very small desktop space while reducing power consumption.
- The price of these displays is falling rapidly, and are thus becoming popular for desktop application as well. Also large screen LCD monitors are available at reasonable price.
- Figure below shows the typical arrangements of various elements of monochrome LCD display.

Atmiya University Rajkot

shows the ty

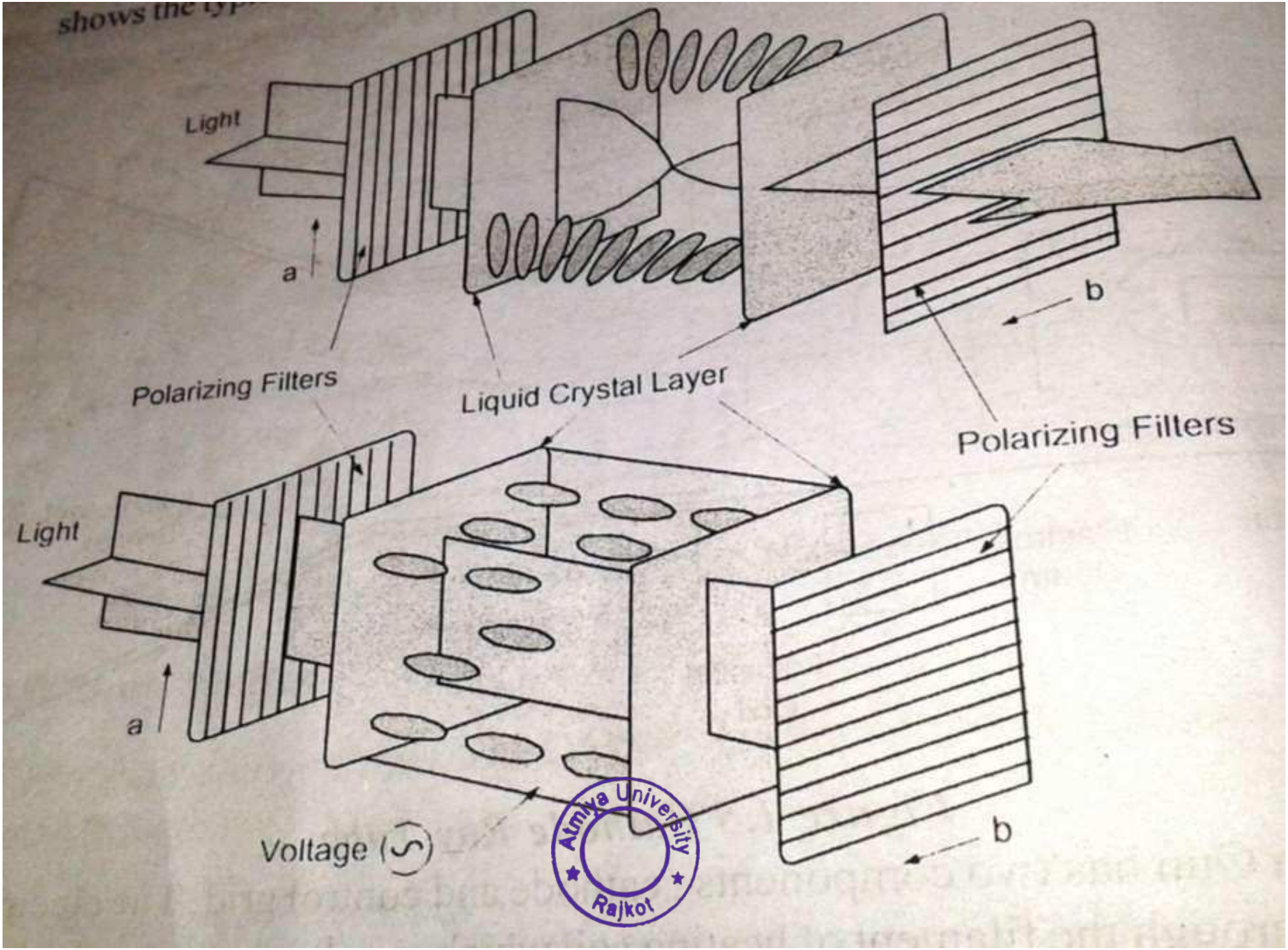

Atmiya University Rajkot

- As shown in figure the liquid crystal is placed between two polarizing filters.
- The polarizing filters are at right angles to each other.
- When light strikes the first polarizing filter, it is polarized in vertical direction.
- The light waves which are parallel to polarizing layer, can only pass through it.
- Then light enters in liquid crystal layers.
- When there is no electric current applied to the crystal, it twists the plane of vibration of light by 90 degree, which allows the light to pass through the second polarizing filter.
- If an electric voltage is applied to liquid crystal molecules, they untwist and aligns in the direction of voltage.

Atmiya University Rajkot

- When they straighten out, they change the angle of the light passing through them and no light can pass through that area of the LCD, which makes that area of screen darker than the surrounding areas.
- In a colour LCD display, colour filters having three primary colours i.e red, green and blue are provided.
- The colours are produced on screen using proper mixing of red, blue & green.

Atmiya University
Rajkot

LCD Working Principle

Liquid crystals exist in a state between liquid and solid. The molecules of liquid crystal are all aligned in the same direction, as in a solid, but are free to move around slightly in relation to one another, as in a liquid.

Liquid crystal is actually closer to a liquid state than a solid state, which is one reason why it is rather sensitive to temperature.

The array of liquid crystals become opaque when the electric field is applied, for displaying the image. Their use as display devices has been made popular by their widespread use in portable calculators and in the lap top or portable computers.

Their full screen size with reasonably low power consumption has made them suitable for portability. Another advantage is that they occupy very small desktop space while reducing the power consumption.

The price of these displays is falling rapidly, and are thus becoming popular for desk top applications as well. Also large screen size LCD monitors are available currently at reasonable price.

ADVANTAGES & DISADVANTAGES OF LCD

- Less electrical consumption compare to CRT (less than 30%)
- Light weight and comfort.
- Can be made in any size or shape.
- Images produced by LCD are perfectly sharp.
- LCD has good contrast

DISADVANTAGES:-

- More expensive than CRT display.
- Viewing angle is limited. The saturation, contrast and brightness of image vary outside the viewing angle of LCD display.
- Have fixed aspect ratio and resolution
- Have limited range of operation between 0 to 60 degree centigrade

Atmiya University Rajkot

Application of LCD

- Computer Monitors
- Television
- Gaming Devices
- Calculators
- Clocks and watches
- Mobiles

Atmiya University
Rajkot

LIGHT EMITTING DIODE (LED)

- Light Emitting Diode (LED) is a emissive device. The emissive displays (or emitters) are devices that convert electrical energy into light.
- A matrix of diodes is arranged to form the pixel positions in the display, and picture definition is stored in a refresh buffer.
- As in scan – line refreshing of a CRT, information is read from the refresh buffer and convert to voltage levels that are applied to the diodes to produce the light pattern display.

Atmiya University Rajkot

Basic Definition

RASTER : A rectangular array of points or dots.

PIXEL : One dot or picture element of the raster

SCAN LINE : A row of pixels

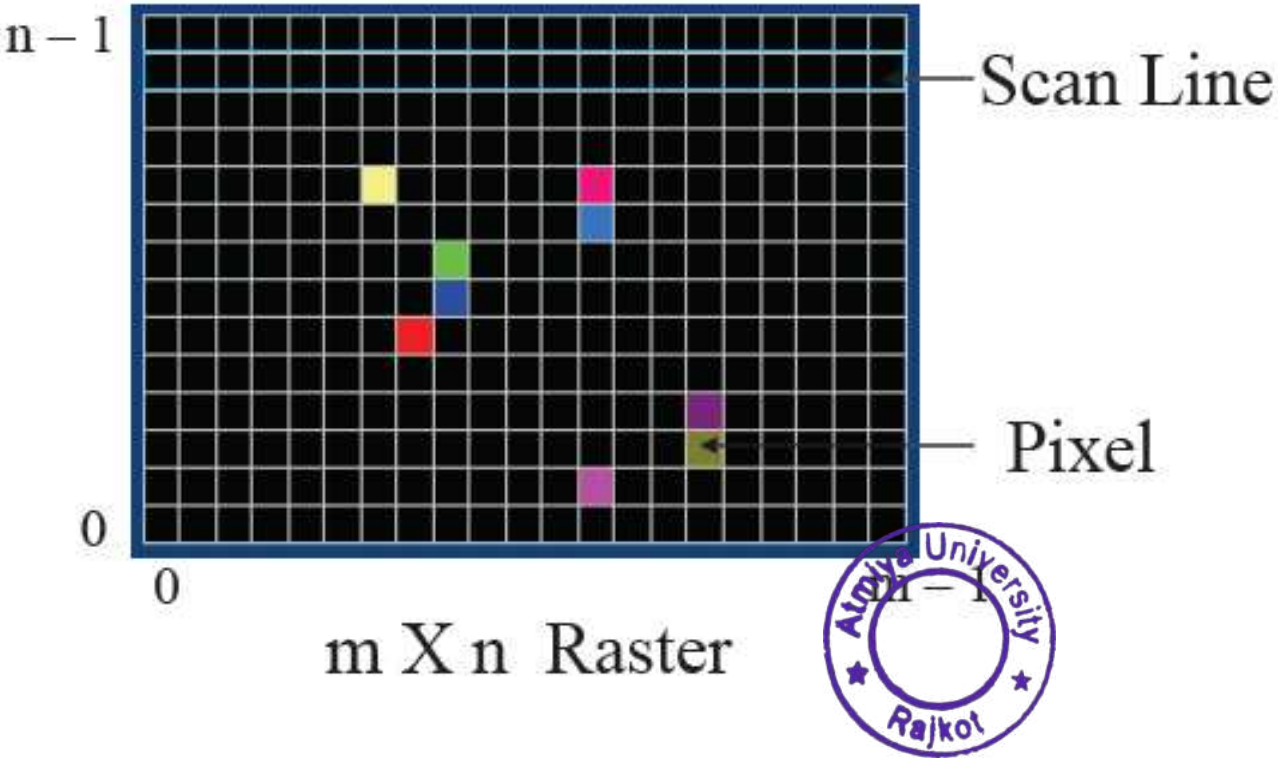

We don't have any pixel like (1.2, 5.8). In raster device co-ordinates can take integer values only.

Atmiya University Rajkot

TYPES OF DISPLAY TECHNIQUES

- There are many ways to generate image of given object on screen.
- Few of them are:

1. Raster Scan Display
2. Vector Scan Display

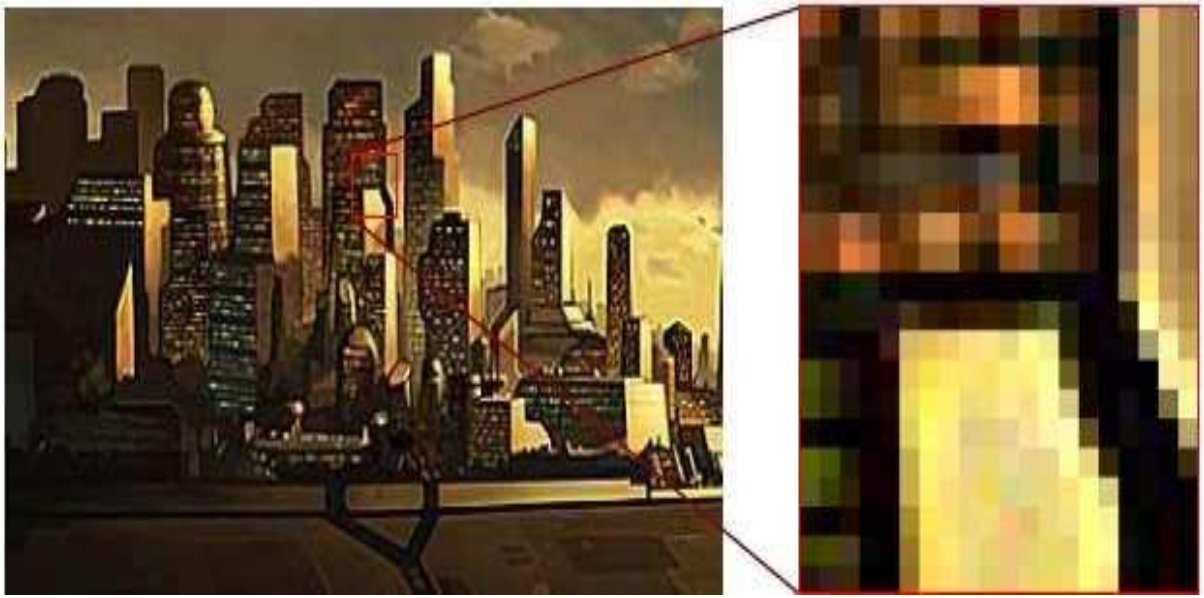

1. Raster Scan Display

- Raster scan images are displayed through the arrangement of colored pixels on screen or dots on a print to display an image.
- Everything you create will eventually be seen as a raster image.

Atmiya University Rajkot

- A raster image consists of pixels, each pixel corresponding to a particular address in memory.
- The image is displayed by illuminating the pixel.
- Resolution of an image is defined by the number of pixels per inch in horizontal and vertical direction.
- Because they are based on a grid of a fixed size, raster images do not scale up well.
- The closer you get to a raster image, or the larger a raster image is scaled, the bigger the pixels become.
- To make large raster images you need to a higher resolution to begin with.
- The higher the resolution, the larger the file size.
- Most common raster displays are television or computer screens.
- The raster scan image generation technique is shown in figure.

Atmiya University Rajkot

- Screen is divided into a large number of discrete phosphor picture elements, called pixels.
- The number of separate pixels in the raster display typically range from 256 x 256 to 1024 x 1024
- Each pixel on the screen can be made to glow with a different brightness.
- Colour screens provide for the pixels to have different colours as well as brightness.
- The electron beam follows a fixed path from left to right and top to bottom one line at a time.
- Beam moves from upper left corner and moves to the right. During the scan, the intensity of beam is changed according to the image data.
- The image data(colour, intensity value etc.) is stored in the area of system memory which is called frame buffer or refresh buffer.

Atmiya University Rajkot

➢A single monochrome raster scan device can display a dot or nothing. It means, that it can display a pixel that is either ON or OFF.

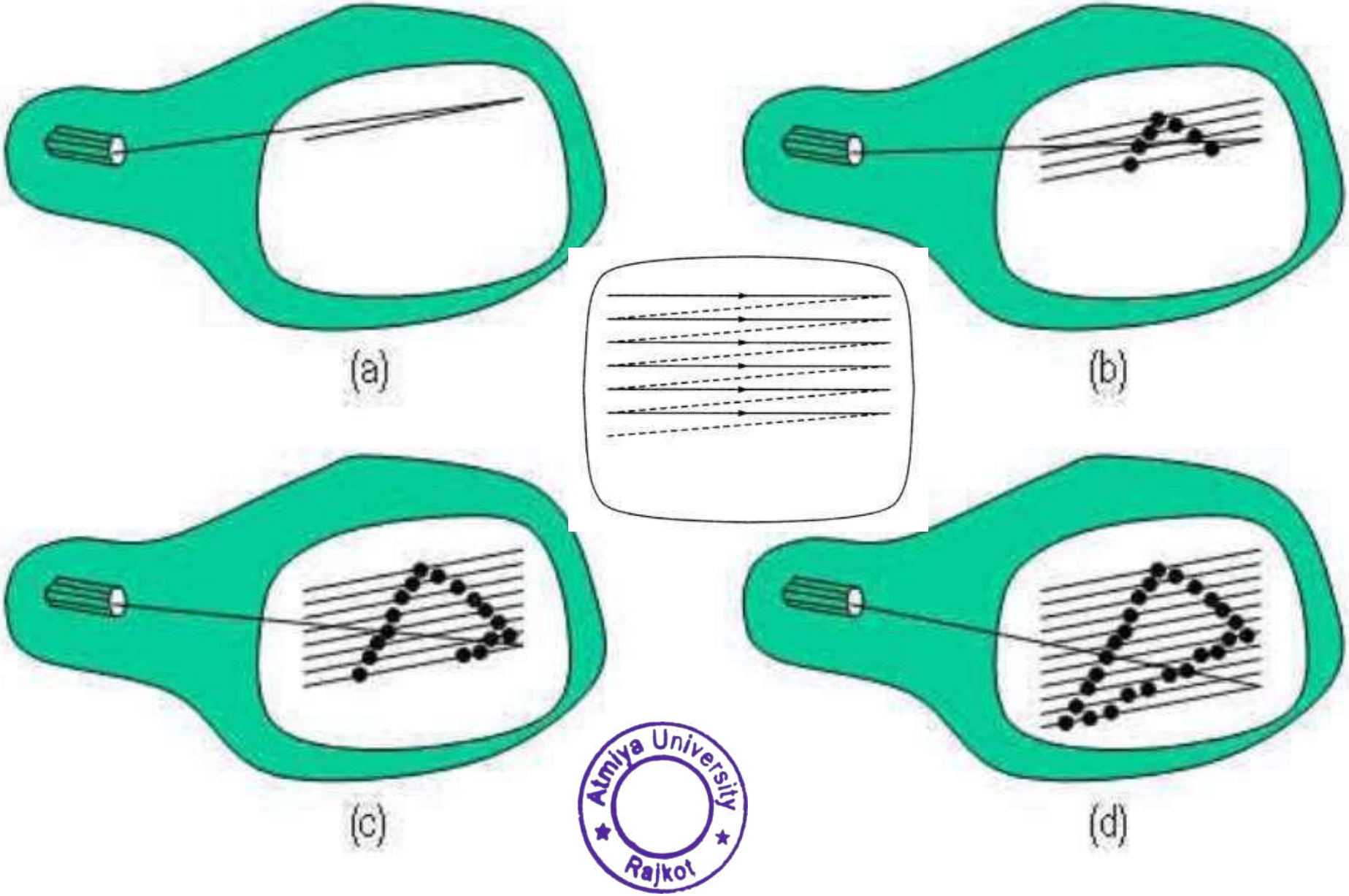

Atmiya University Rajkot

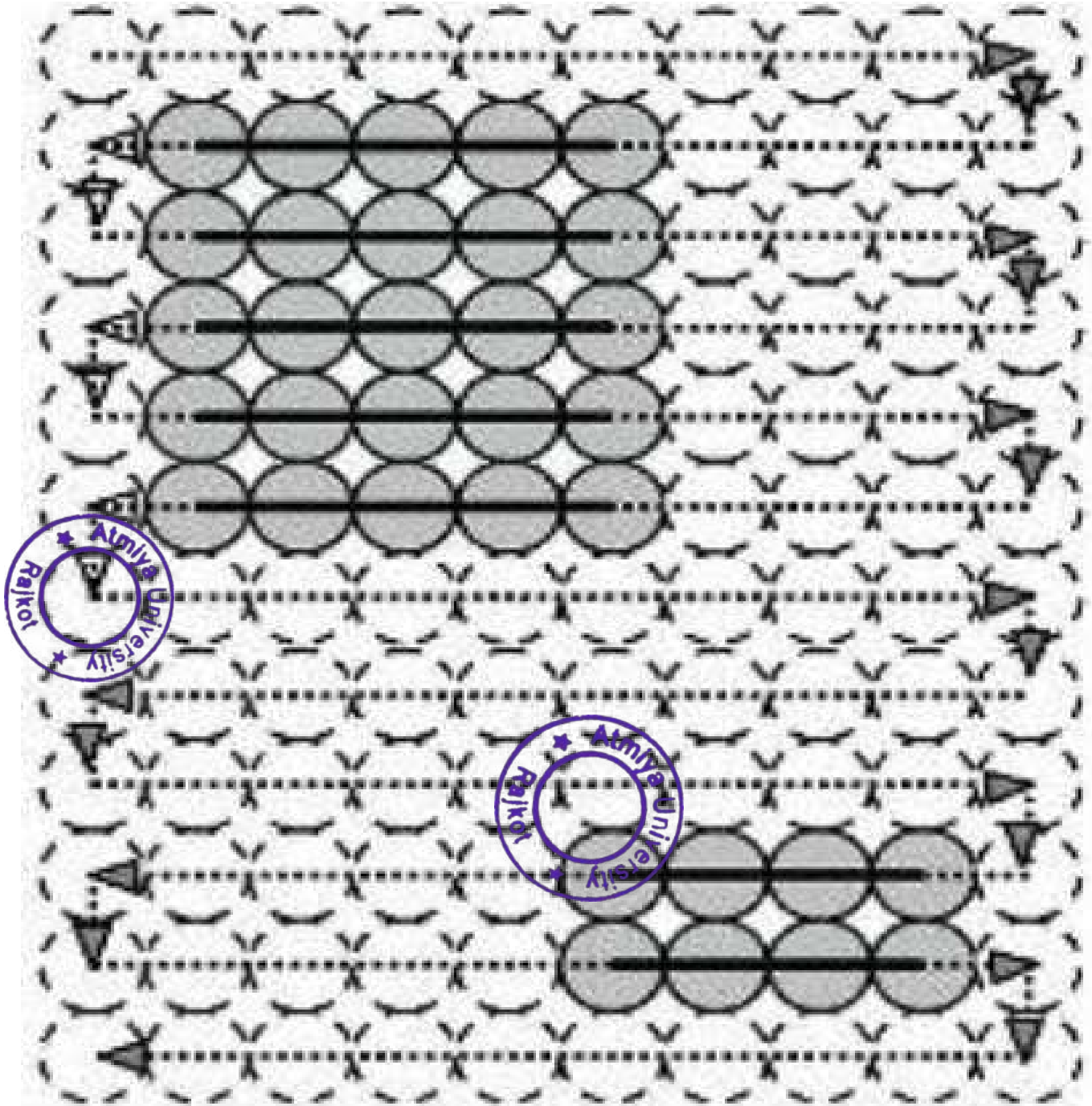

raster-scan

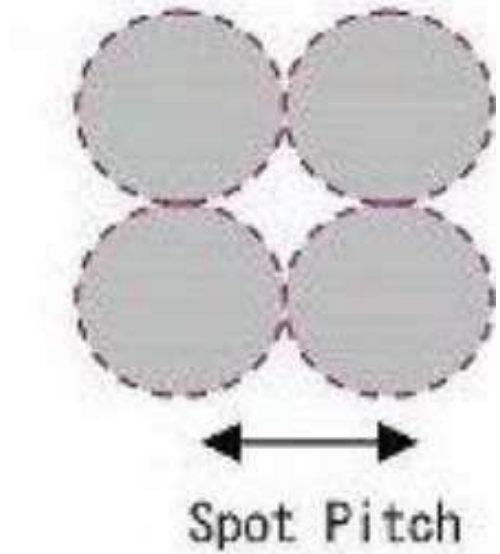

: Beam OFF

: Beam ON

Atmiya University Rajkot

- As shown in figure the electron beam follows a fixed path from left to right and top to bottom one line at a time.
- Beam moves from upper left corner and moves to the right.
- During the scan, the intensity is changed according to the image data.
- At the right end the beam is blanked and moved to the left corner of the next line which is shown in figure by dotted line.
- That is, it can display a pixel that is either on or off and hence needs only 1 bit of information.
- A bit can have two values, either “0” or “1”.
- 1 refers that electron beam is ‘on’ whereas ‘0’ refers that electron beam is “off”.
- A monochrome display with 512*512 pixel resolution requires 32 kilobytes of memory in the frame buffer.

Atmiya University Rajkot

- If 2 bits are associated with each pixel then, 4 different combinations(00,01,10,11) are possible.
- Two bits per pixel gives 2^2 i.e 4 intensity levels, three bits per pixel gives 2^3 i.e 8 intensity levels, 8 bits per pixel gives 2^8 i.e 256 intensity levels.
- In a colour display device, the CRT screen has three phospher colour dots at each pixel for three primary colours – Red, Blue and Green.
- The CRT has three electron guns, one for each colours dot.
- The shadow mask, which contains a series of holes is placed between guns and phosper coated screen, at a short distance from the phosphor coated screen.
- Because of the geometrical arrangement of the shadow mask, each electron beam can strike and illuminate only its corresponding colour dot. By combining the three primary colours with different itensity levels, any desired colour can be obtained on the screen.

Atmiya University Rajkot

- Eight bits per colour dot (i.e 24 bits per pixel) can give 2^{24} i.e 16.777 million different colours.
- The colour display device with a screen resolution of 1024×1024×24 bits or 3 megabytes of storage memory for the frame buffer.

Atmiya University
Rajkot

Graphics Display

The graphics display can be divided into two types based on the scan technology used to control the electron beam when generating graphics on the screen:

Random scan: the screen is not scanned in particular order.

Raster scan: the screen is scanned from left to right, top to bottom, all the times to generate graphics.

Atmiya University
Rajkot

Random Scan and Raster scan

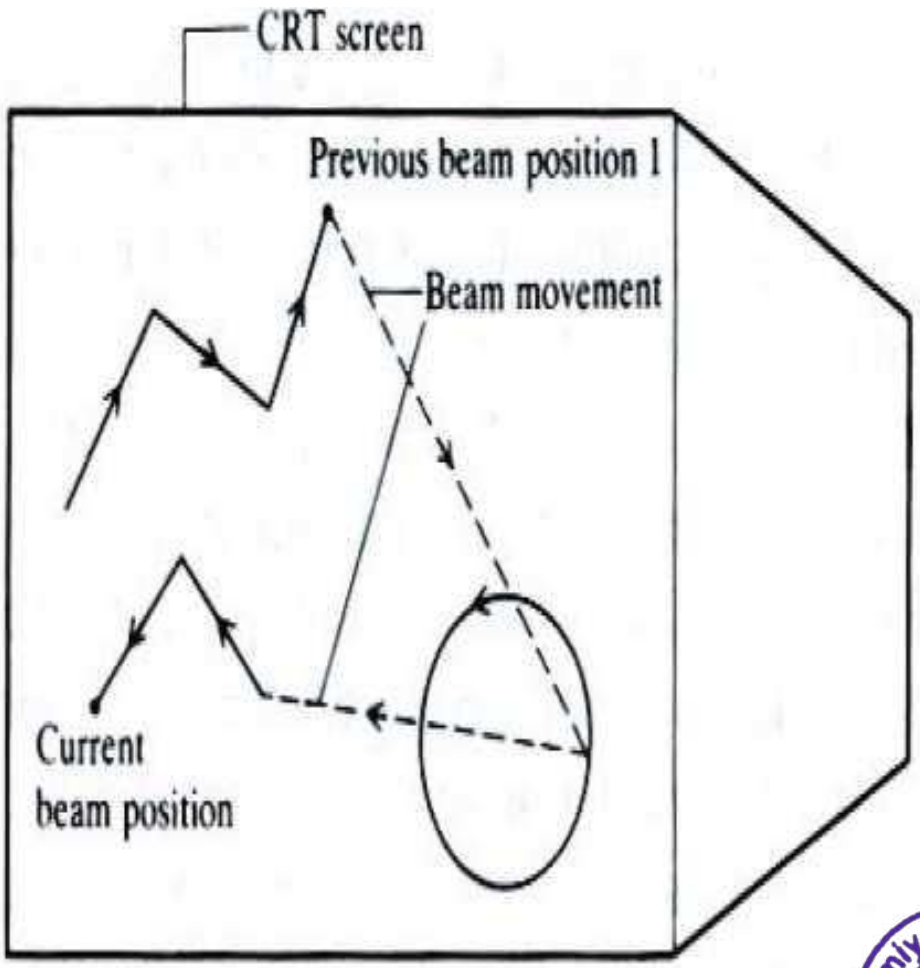

(a) Random scan

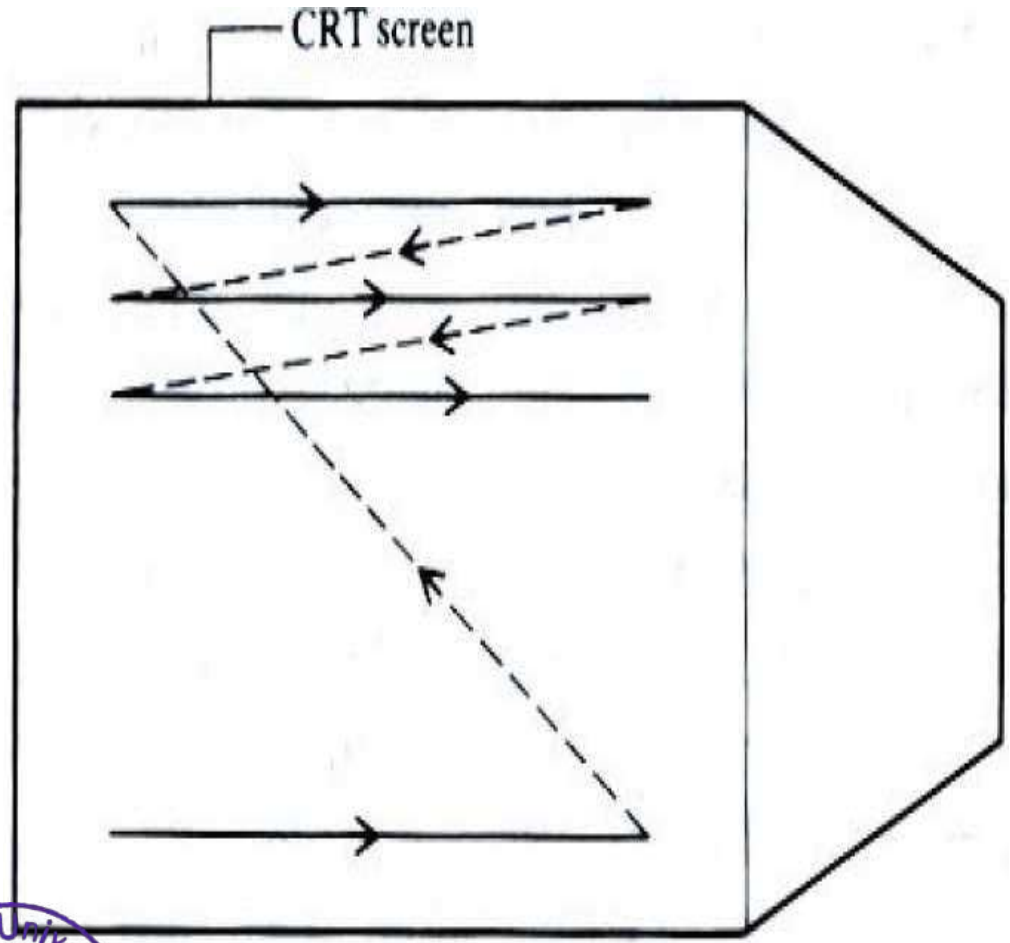

(b) Raster scan

Atmiya University Rajkot

2. Vector Scan Display:- (Random Scan Display)

- In this system, the electron beam moves like a pencil and follows straight line path.
- The line is drawn by direction & magnitude.
- The quality of straight line produced by vector scan is better than raster scan display.
- Vector images are created using mathematical algorithms and geometric functions.
- Instead of defining the color of each every pixel in a grid of raster image, a vector image uses coordinates and geometric formulas to plot points that define areas, volumes and shapes.
- Vector graphics is the use of geometrical primitives such as points, lines, curves, and shapes or polygon, which are all based upon mathematical equations, to represent images in computer graphics.

Atmiya University Rajkot

- Motion in vector program is stored not by a long sequence of image files, but through change in positions of the geometry.
- It uses an electron beam which operates like a pencil to create a line image on screen.
- The image is constructed out of a sequence of straight-line segments.
- Each line segment is drawn on the screen by directing the beam to move from one point on the screen to the next.
- Where each point is defined by its x and y coordinates.
- The image is made up of straight line only, smooth curves can be approximated by making the connecting line segments as short as possible.

Atmiya University Rajkot

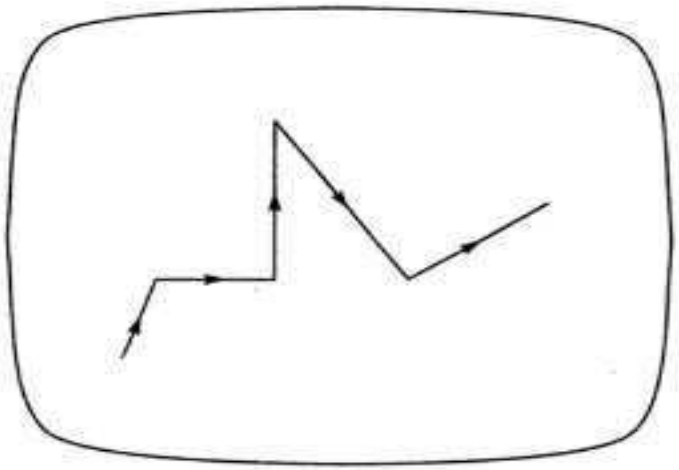

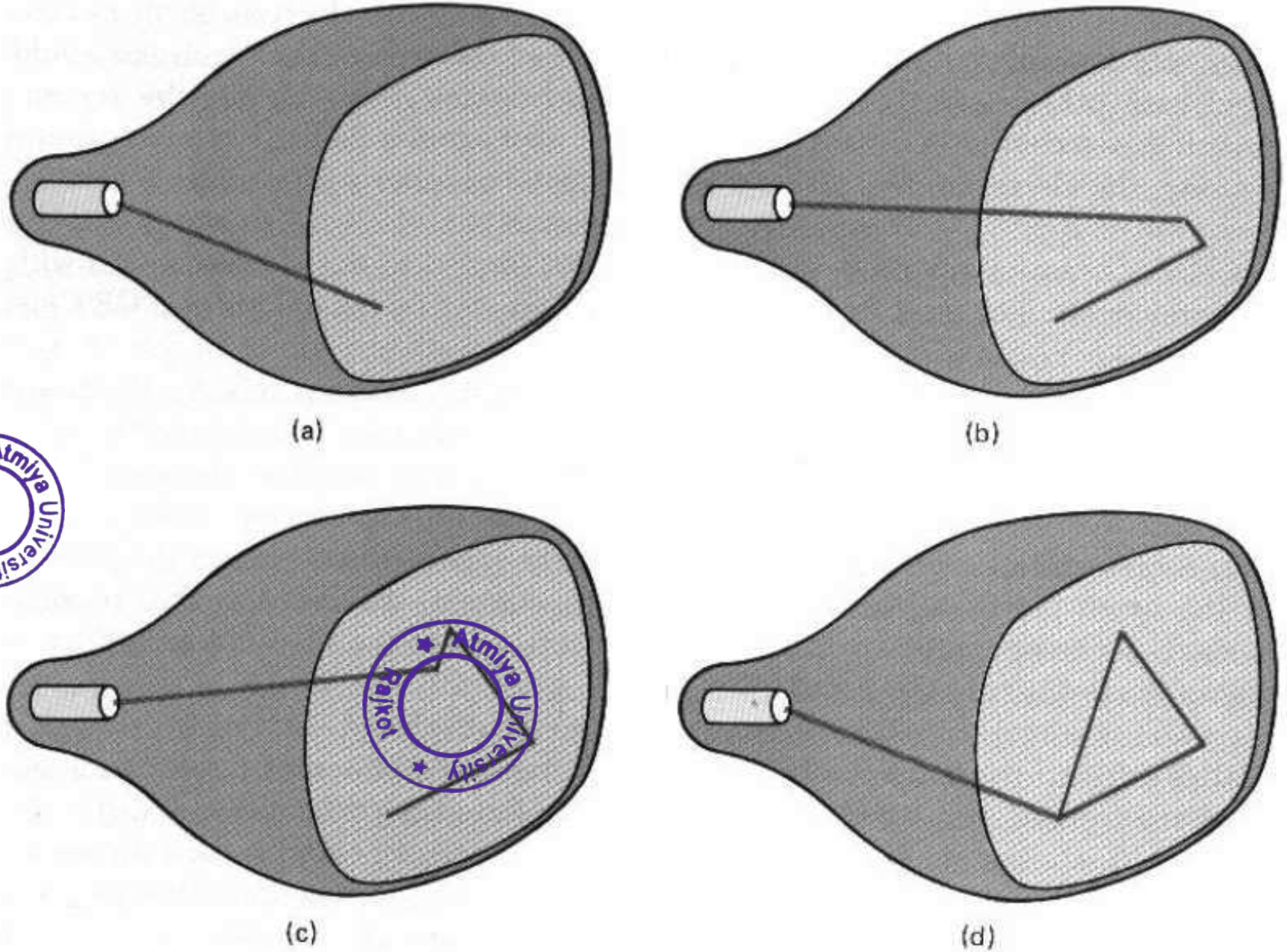

Atmiya University Rajkot

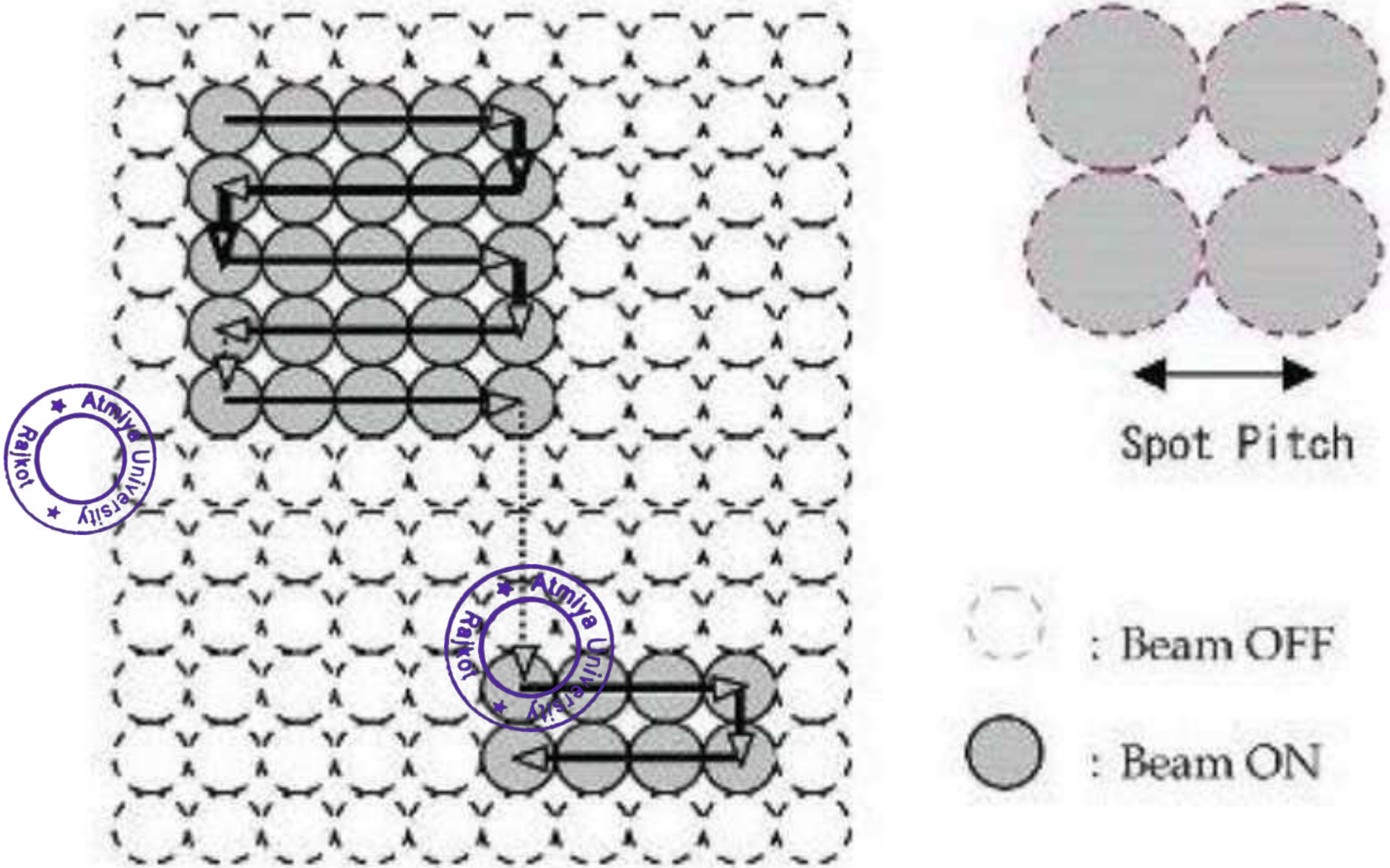

vector-scan

Atmiya University Rajkot
Atmiya University Rajkot

- The vector scan display can be of two types:
- 1. Refresh Display (Directed Beam Refresh Display)
- 2. DVST(Direct View Storage Tube)

Refresh Display (Directed Beam Refresh Display)

- In Refresh Display, once the picture is generated the phosphor elements on the screen surface can maintain their glow for short period of time.
- So the picture is to be refreshed again after that time period.
- In order to maintain flicker free pictures the screen is required to be refreshed 30 to 60 times/second.
- Very high resolution can be obtained by refreshed display and hence the quality of picture is excellent.
- For complex pictures (i.e pictures with large number of straight line segments), it is difficult to avoid the flickering of the picture.
- This display device has limited colour capability.
- Animation of the image is also possible with this system.

Atmiya University Rajkot

DVST

- The picture generation technique is same as refresh display but no refreshing of the screen is required in this technique.
- Two electron guns are used in DVST.

1. Primary gun:- Used to generate picture on the screen by glowing phosphor elements.
2. Flood cathode or flood gun:- Used to keep the continuously glow once they are energized by the primary gun.

- **Advantages of DVST:-**

1) It is the lowest display device
2) It produces flicker-free picture as no refreshing is required due to this very complex pictures can be displayed without flicker

Atmiya University Rajkot

3) The resolution of display is very high and hence the quality of picture is excellent.

- **Disadvantages:-**

1) With DVST, the selected parts of the picture cannot be erased. In order to erase a picture portion, the entire screen must be erased and the modified picture is redrawn.
2) It lacks colour capability.
3) It lacks animation capability.
4) With DVST, it is not possible to use light pen as input device. Or Inability to use the light pen as a data entry device.

Atmiya University Rajkot

Vector v/s Raster Scan Display

- In Vector scan display, the electron beam operates like pencil generate a picture on the CRT screen.
- In vector scan display, the electron beam sweeps between the end points of a line to be generated.
- For complicated image, vector scan display can flicker
- In vector scan display, the quality of picture is excellent.

- In raster scan display, the electron beam is swept along the horizontal line(row) from left to right. During the swaping of electron beam, the beam intensity is turned on and off depending upon the intensity value of the corresponding pixel.
- In raster scan display, the electron beam sweeps one horizontal line at a time from top to bottom.
- Even for complicated image, raster scan display can't flicker.
- In raster scan display, the quality of picture is average.

Atmiya University Rajkot

Comparison of Graphics Terminal Features

	Directed-beam refresh	**DVST**	**Raster scan**
Image generation	Stroke writing	Stroke writing	Raster scan
Picture quality	Excellent	Excellent	Moderate to good
Data content	Limited	High	High
Selective erase	Yes	No	Yes
Gray scale	Yes	No	Yes
Color capability	Moderate	No	Yes
Animation capability	Yes	No	Moderate

Atmiya University Rajkot

Input Devices

- The commonly used input devices are:

1) Keyboard
2) Mouse
3) Track ball
4) Light pen
5) Scanner
6) Joystick

Atmiya University
Rajkot

Keyboard

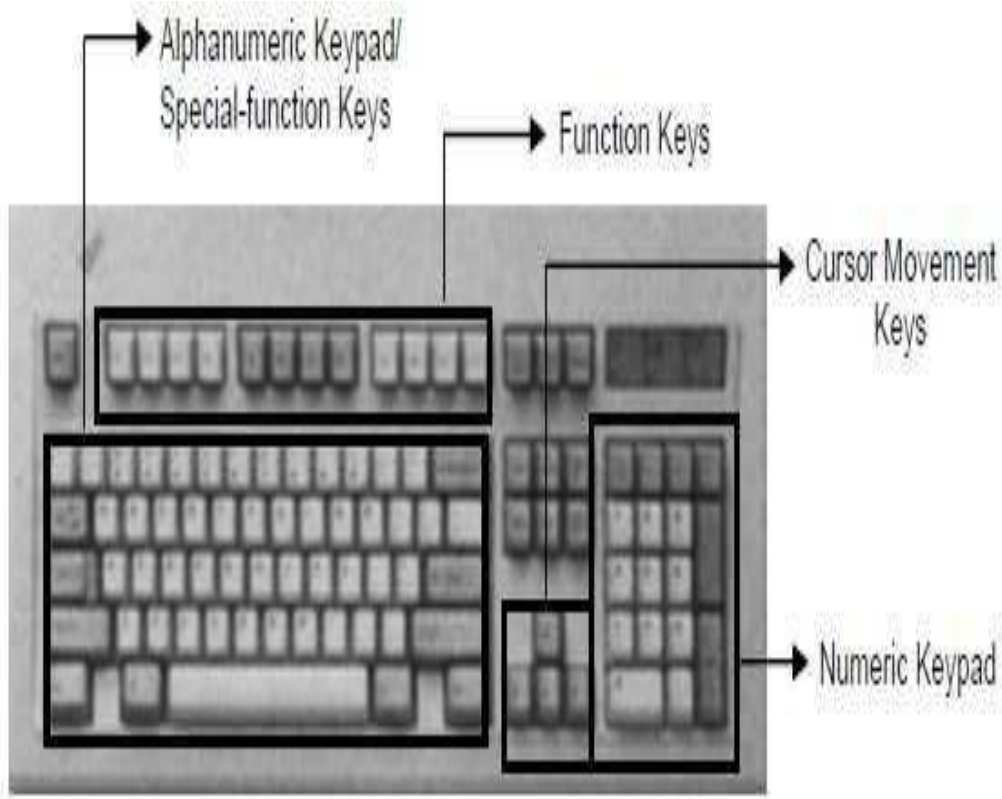

Atmiya University
Rajkot

Mouse

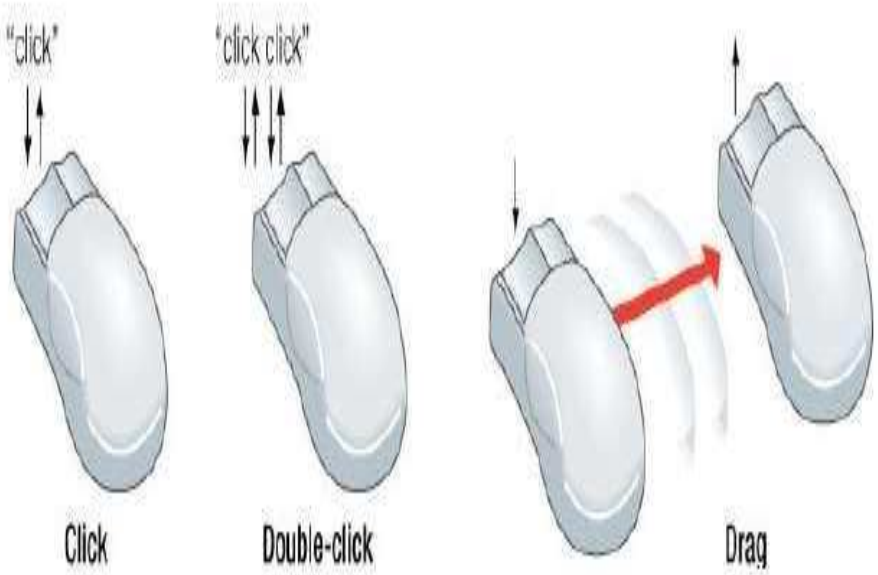

Atmiya University
Rajkot

Track ball

- Similar to that of mouse.
- In this the device is stationary , while the ball is rotated with the fingers or palm of the hand to produce the screen-cursor movement.
- Like mouse it is a 2Dimensional positioning device.

Atmiya University
Rajkot

Light pen

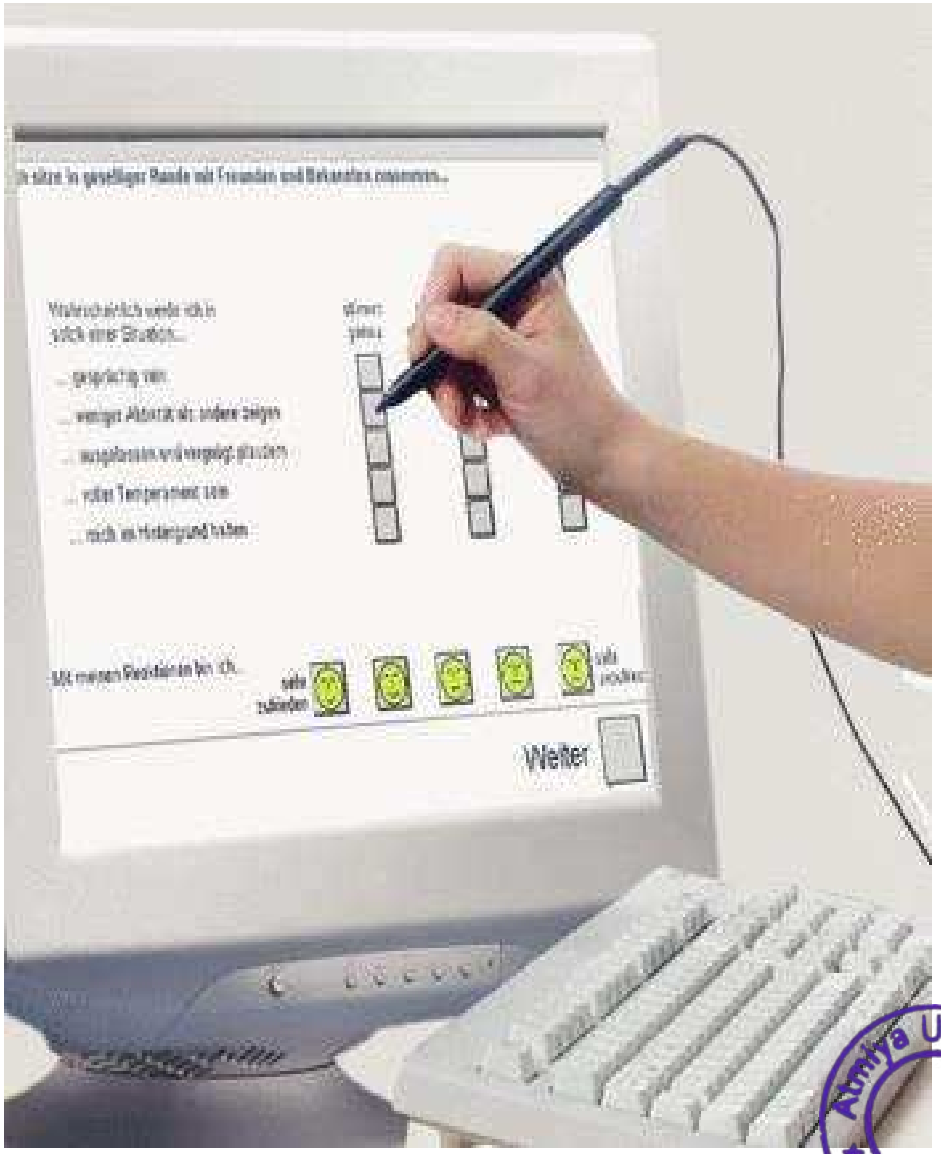

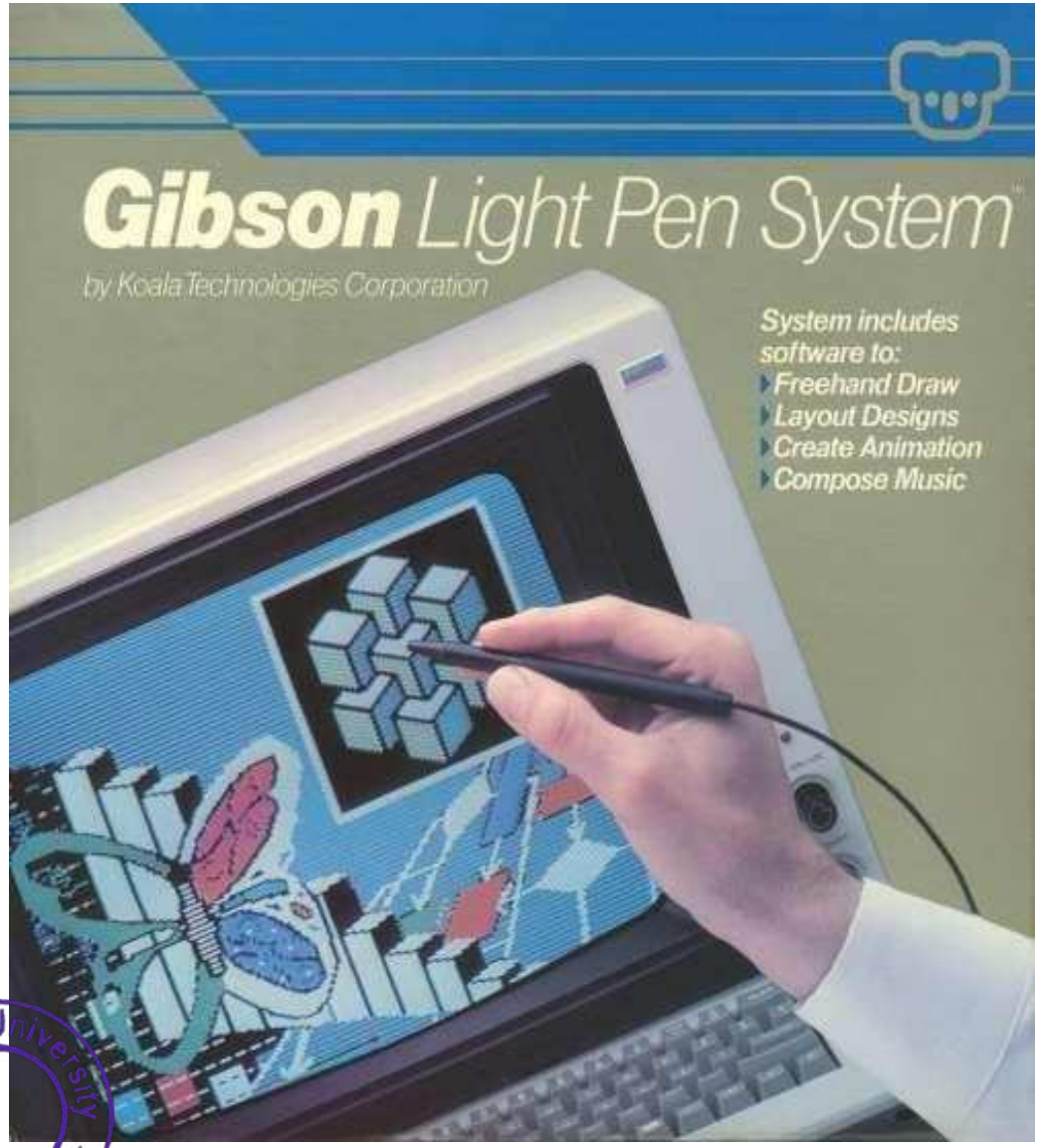

Atmiya University Rajkot

- A light pen shown in figure is a pencil shaped pointing or picking device used to select the screen positions or a displayed graphics item on the screen, by touching the tip of the light pen at respective point on the screen.
- The light pen itself does not emit the light but detects the light coming from point on the CRT screen.
- The user touched the pen tip at the required point on the screen and presses the push button on the pen.
- Using the emitted light as an input, it sends signal to the computer to select the point or item.
- **Disadvantages:-**

1) Holding the light pen in a elevated position at the display screen for long periods causes arm fatigue.
2) The light pens cannot detect positions within black areas.
3) The light pen cannot be used with DVST type display.

Atmiya University Rajkot

Scanner

- The scanner is an optical device that scans the images, text documents and handwritten documents and convert it into digital image.
- Types of scanner:

1. Flat bed scanner
2. Hand held scanner
3. 3D scanner

Atmiya University
Rajkot

Portronics

3D Scanner

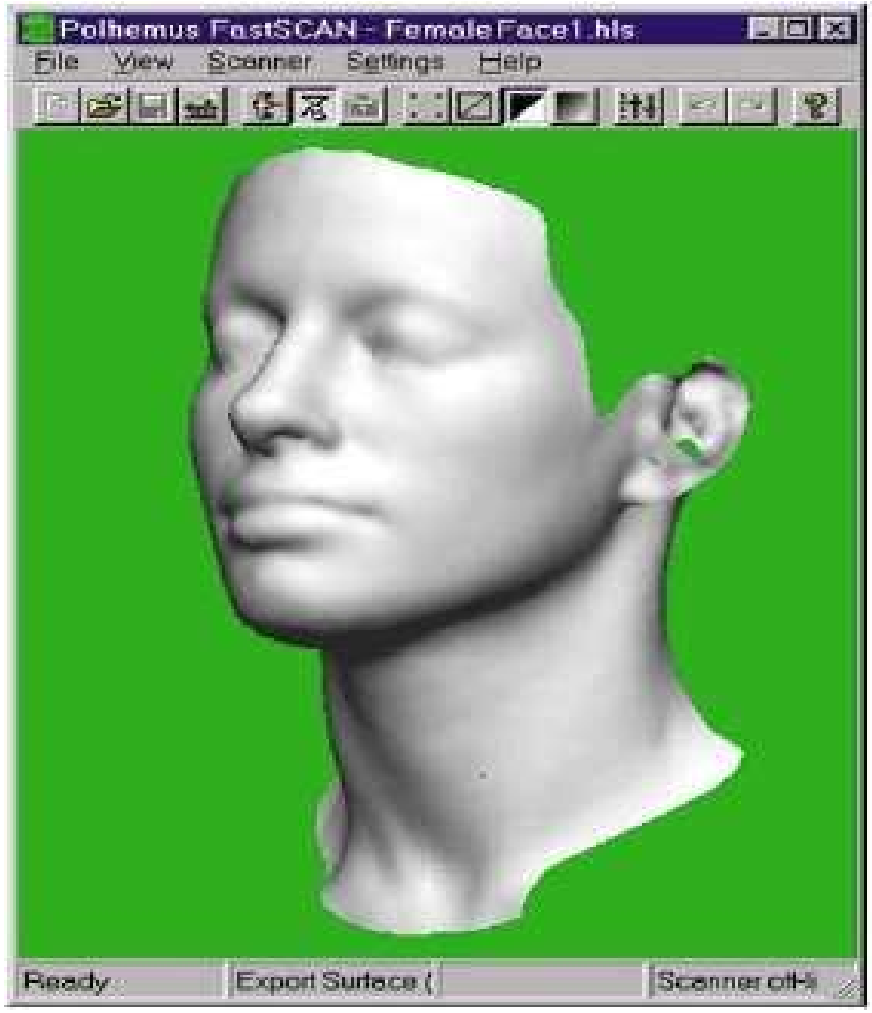

Atmiya University
Rajkot

Joystick

- It is a stick that is pivoted about one end and transmits its angle in two or three dimensions to a computer.
- Many joystick are two dimensional, having two axes of movement.
- A joystick is generally configured so that left or right movement gives the input signal along X axis, and forward or backward movement gives the input signal along Y axis.
- In 3D input joystick the twisting of stick clockwise or anti-clockwise gives the input signal along the Z axis.
- The joysticks are used for motion control in ship, aircraft, game controller etc..

Atmiya University Rajkot

Output Devices

- The commonly used output devices are:

(1) Printer

(2) Plotter

Atmiya University
Rajkot

Printer

- It produces hard copy of output data in the form of text or graphics.
- Depending upon the technology used for printing the documents, Printers are divided into three categories

i) Dot matrix printer

ii) Inkjet printer

iii) Laser printer

Atmiya University
Rajkot

Dot matrix printer

Dot matrix printer

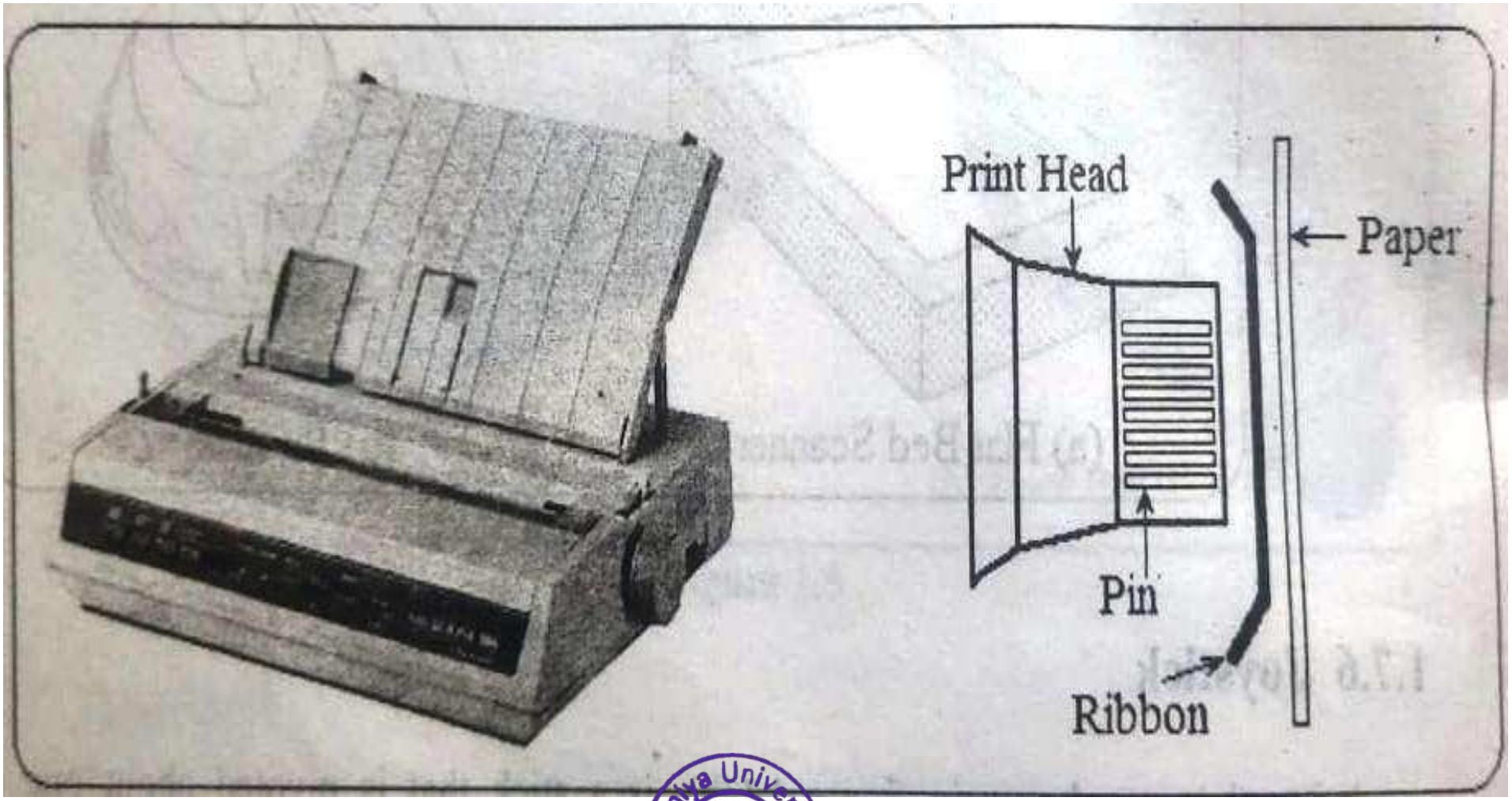

Atmiya University
Rajkot

Dot-matrix Printer

- Figure shows the dot-matrix printer and its print head. It is impact type of printer in which a print head moves back and forth on the page and prints by striking an ribbon against the paper.
- The print head is made of rectangular array of protruded wire pins.
- The characters or graphical image is generated by matrix of dots available on the head of printer.
- The dot is produced by a small metal rod (pin) which is driven forward by electromagnetic pulse.
- As printing is done by mechanical pressure, it can also produce carbon copies of the document to be printed.
- The printing resolution of such printer is limited by the size (diameter) of pin.

Atmiya University Rajkot

Inkjet printer

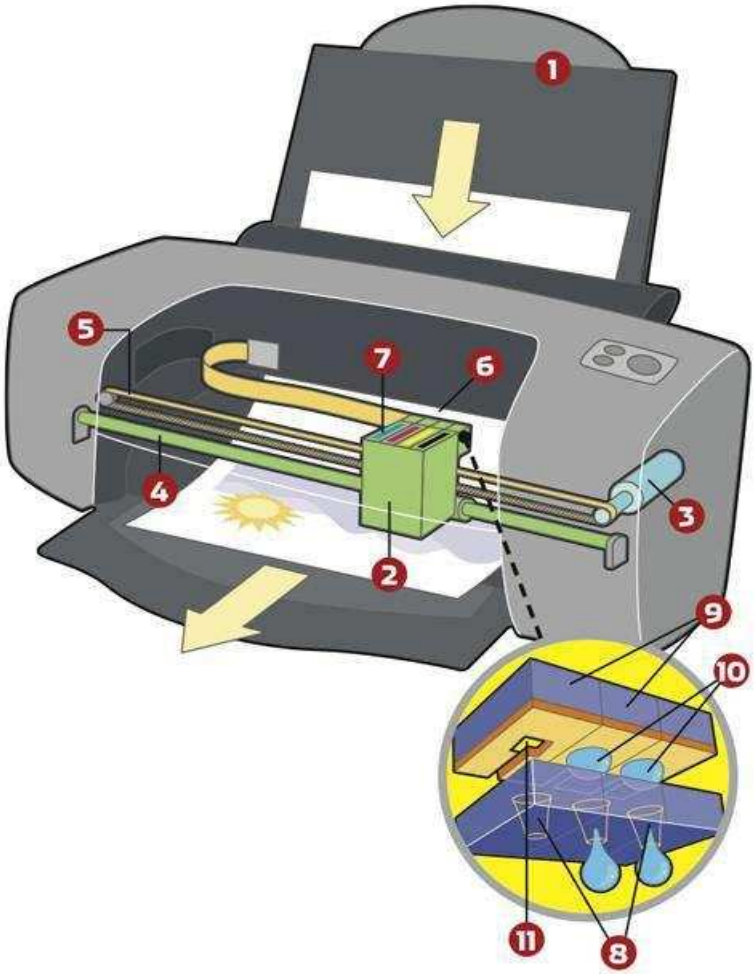

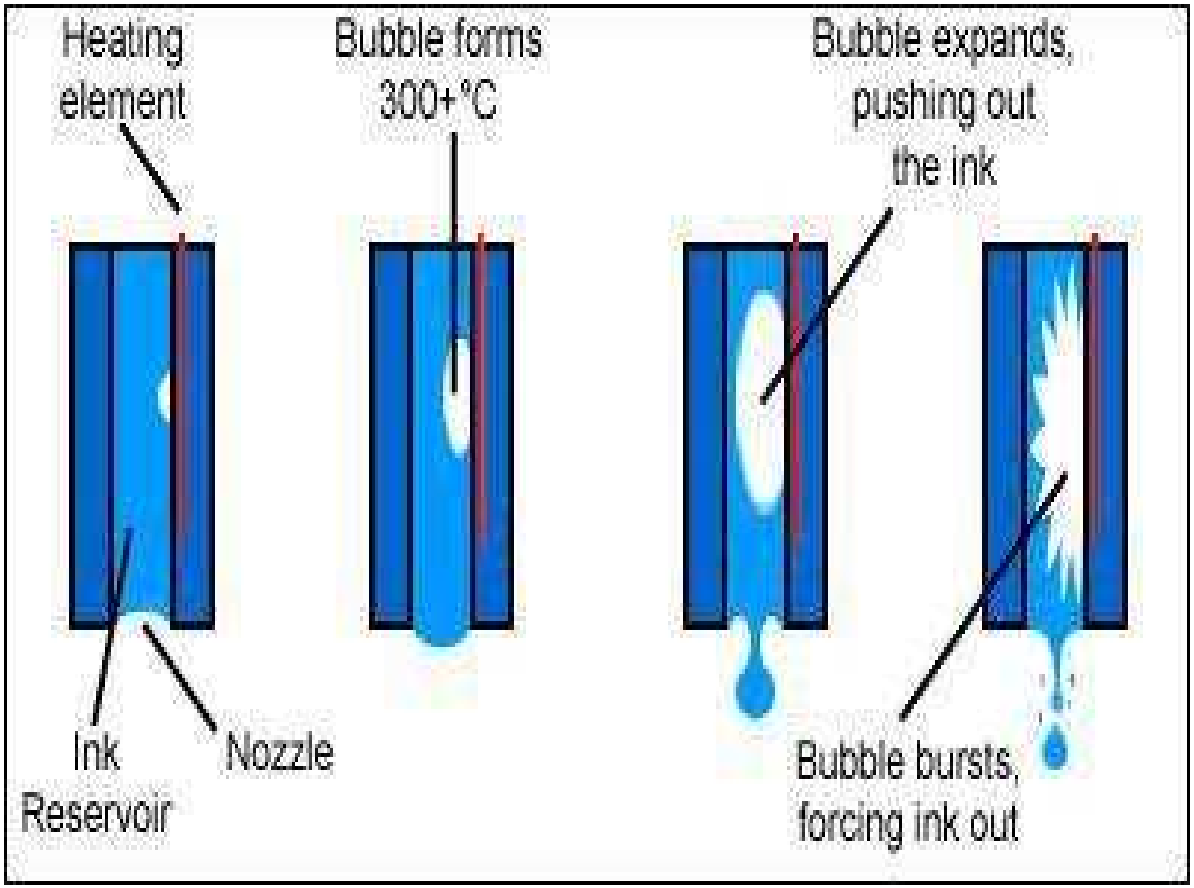

Atmiya University Rajkot

Inkjet printer

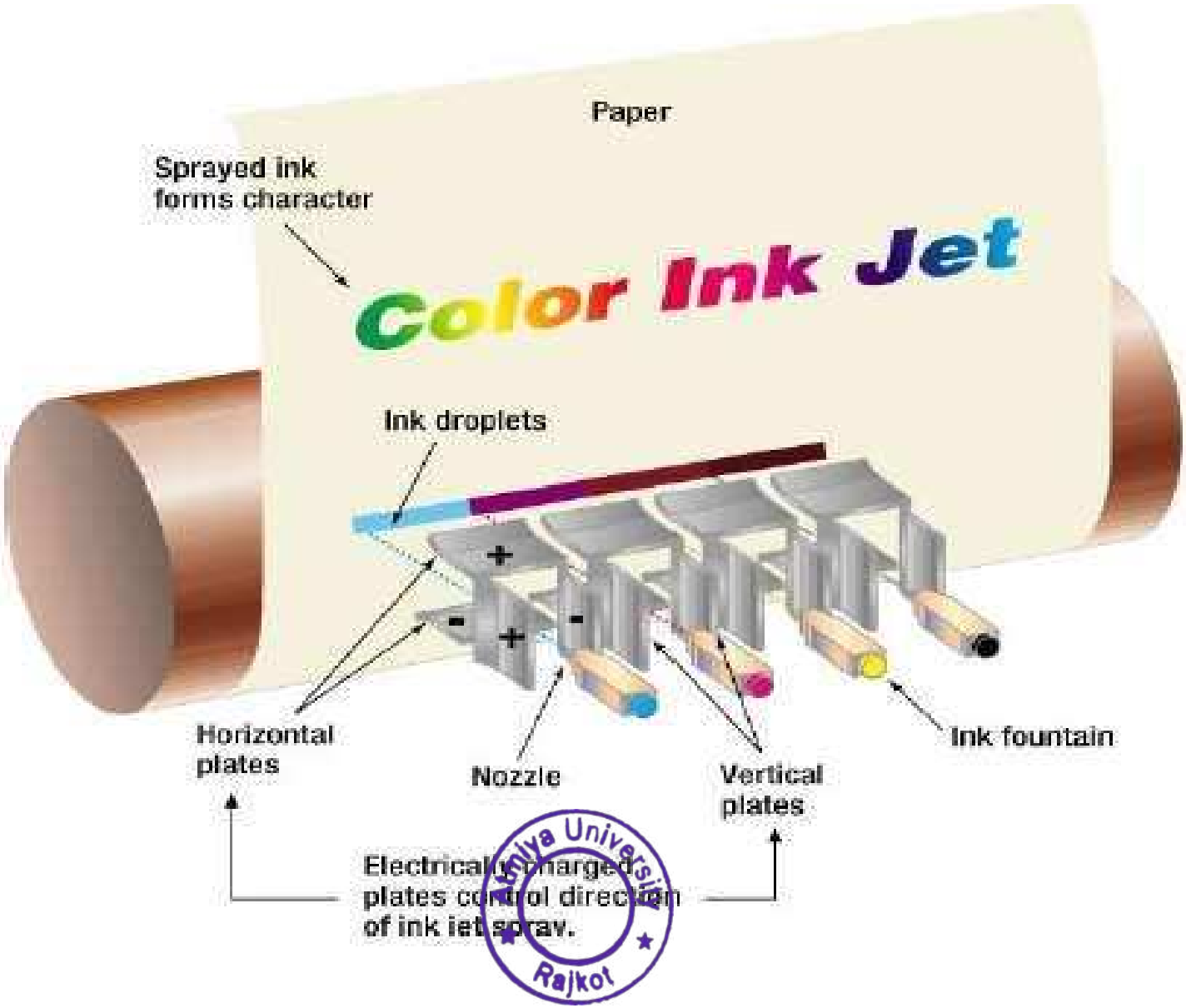

Inkjet Printer

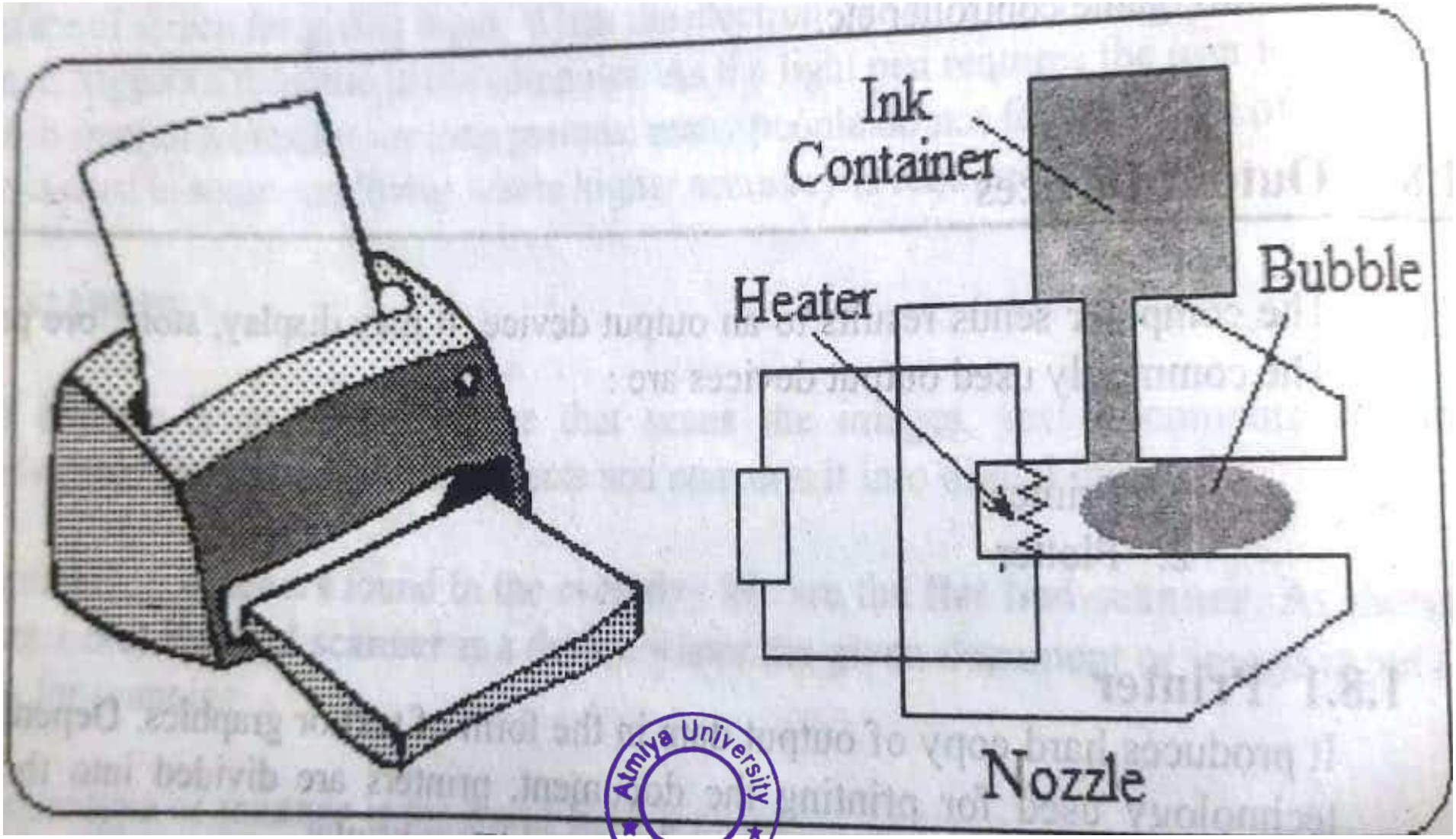

Atmiya University
Rajkot

Inkjet Printer

- Figure shows inkjet printer. It is non-impact type of printer.
- An inkjet printer sprays extremely small droplets of ink emitted by the nozzle of print head on the paper to create an image.
- The ink drop in nozzle chamber gets heated by passing suitable electric current in heater element.
- Due to heating ink drop is converted in to bubble and the bubble expands enormously and bursts on the paper in the form of spray.
- The printing resolution of inkjet printer is higher than dot-matrix printer.
- It can give printing resolution upto 1440 x 720 dots per inch (dpi) .

Atmiya University Rajkot

Laser printer

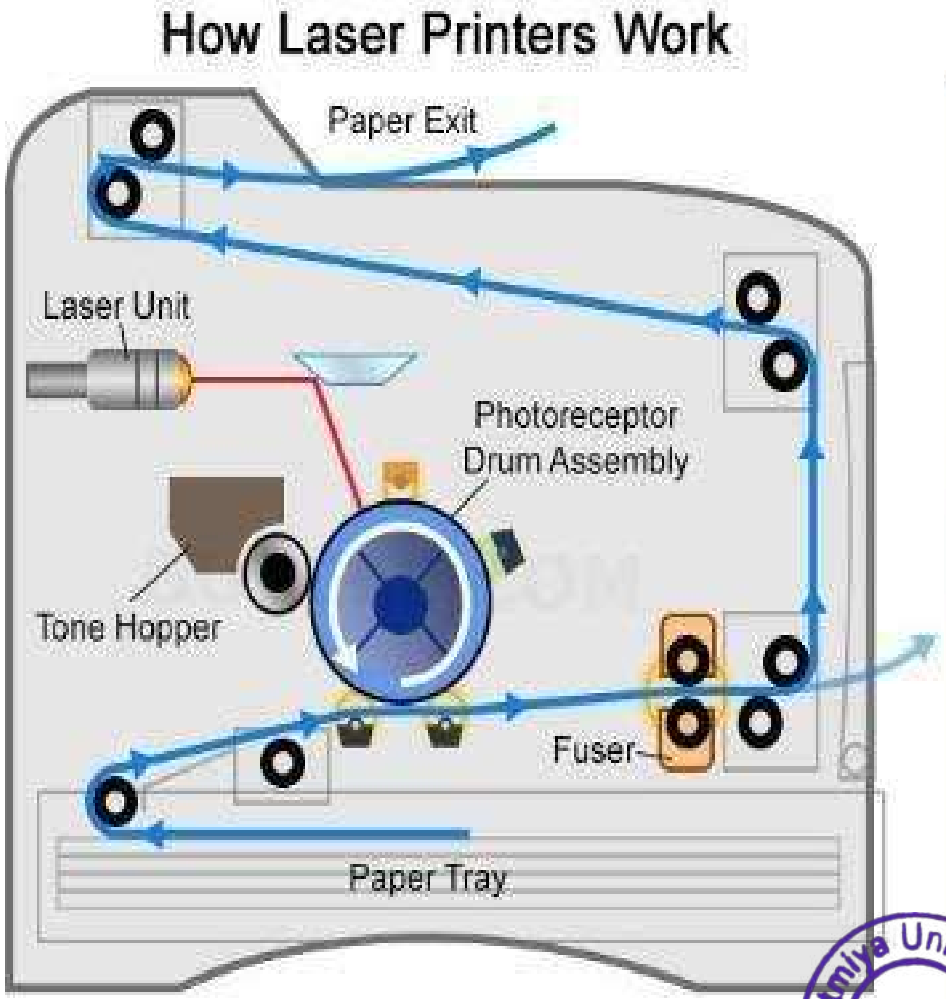

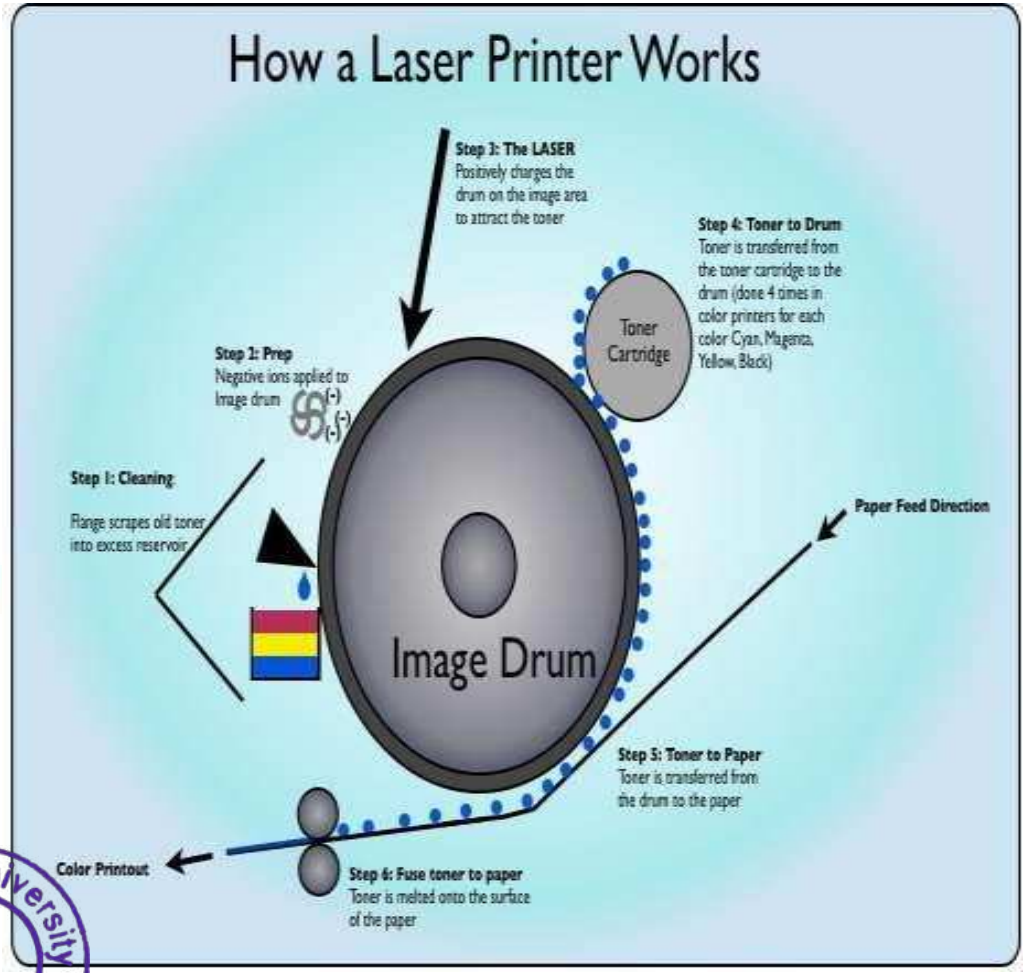

Atmiya University Rajkot

Laser printer

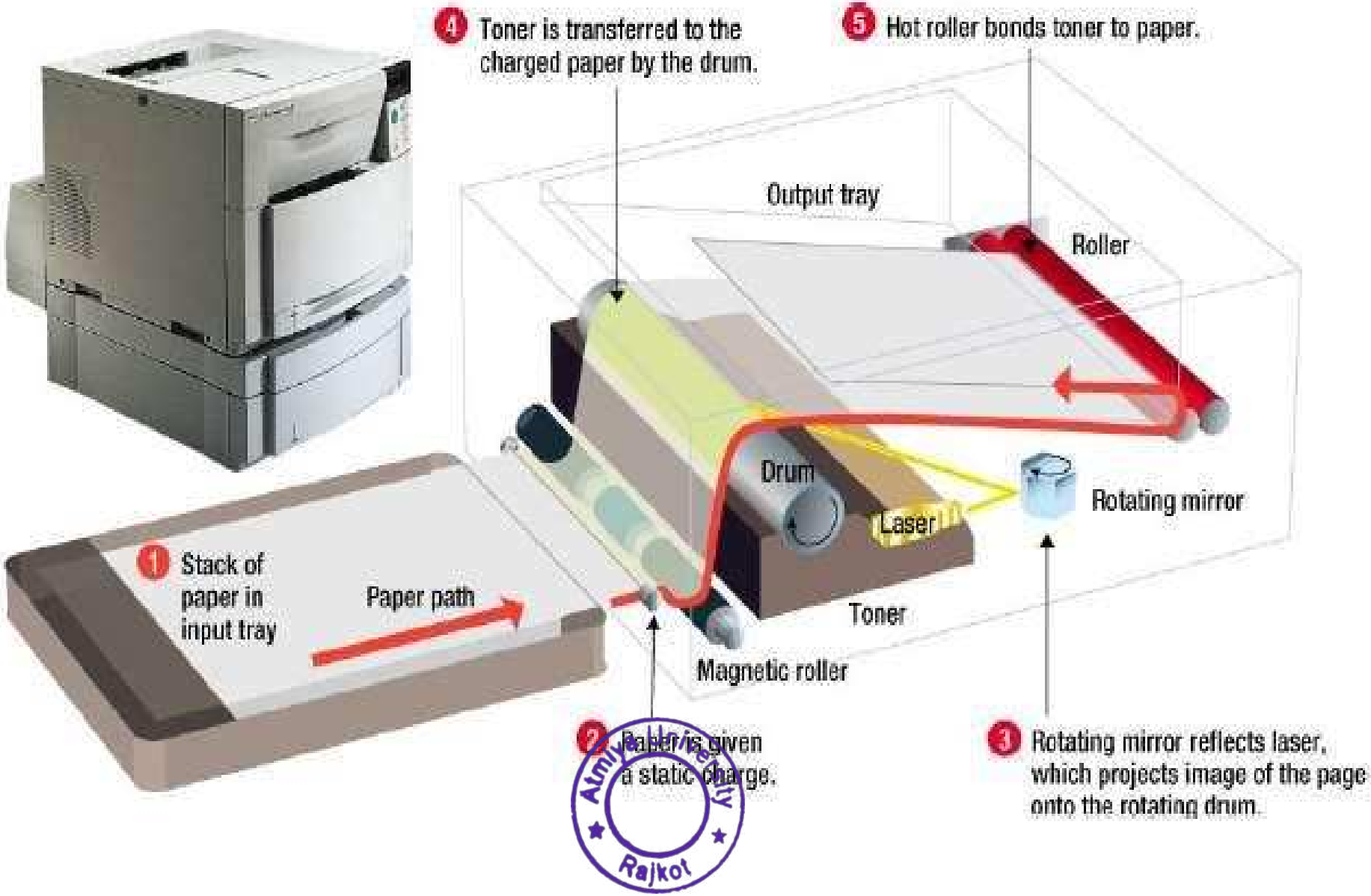

Atmiya Institute of Technology Rajkot

Laser printer

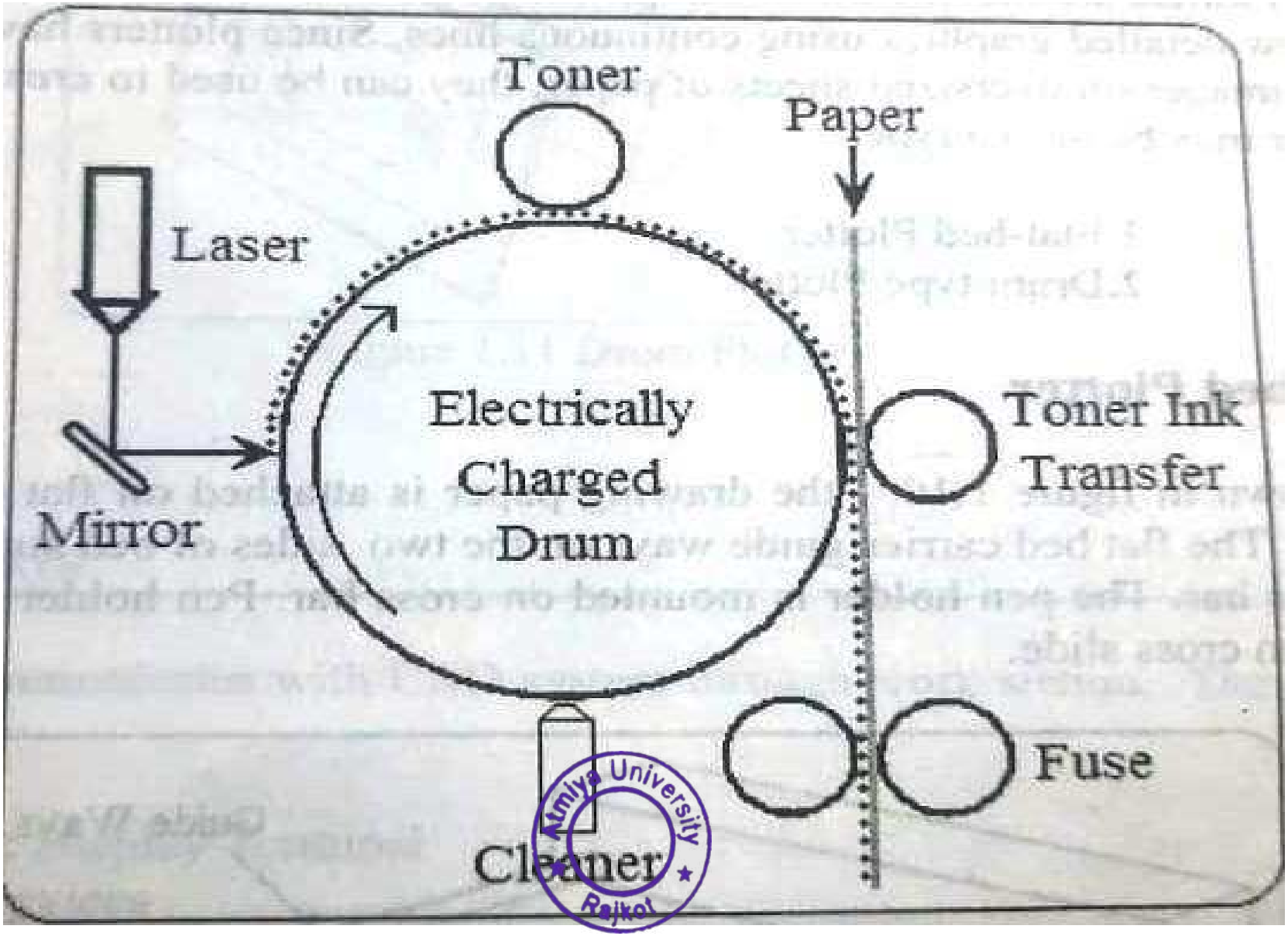

Atmiya University Rajkot

Laser Printer

- Figure shows the schematic diagram of laser printer.
- It is also non-impact type of printer.
- Laser printer uses a laser beam which transfers the image data to an electrically charged drum made up of photo-sensitive material such as selenium.
- The electric charge on the drum attracts toner ink.
- The fine particles of toner ink is transferred to the drum.
- A strong electrical charge is placed on the paper which causes toner ink to transfer from the surface of the drum to the surface of the paper.
- Finally the paper passes through heated fuse fix the toner ink on the paper.
- The cleaner then removes any residual toner ink from the surface of drum.

Atmiya University Rajkot

Laser Printer

- **Advantages**:-

- Laser printer can produce higher quality prints than ink-jet printers.
- Laser printers can also print at much higher speed than ink-jet printers.
- The cost per print is also lower for a laser printer than it is for an ink-jet printer.

- **Disadvantages:-**

- The laser printers cannot print on heat sensitive media like transparencies.
- laser printer print at very high speeds so if the paper is having high moisture content, the paper will be frequently jammed.
- Keeping the fuse element hot while the printer us idle consumes significant power.

Atmiya University Rajkot

Plotter

- Plotter are used for producing business charts, architectural plans and engineering drawings.
- A plotter is a graphics printer that uses a pen or pencil to draw large size images.
- Plotter use continuous lines to generate images while printers use a collection of dots.
- Plotter are much slower than printers because of mechanical motion necessary to draw the detailed graphics using continuous lines.
- Since the plotters have the ability to create large images on oversized sheets of paper, they can be used to create technical drawings.
- Plotter may be of two types:

(i) Flat bed type (ii) Drum type

Atmiya University Rajkot

Flat bed type

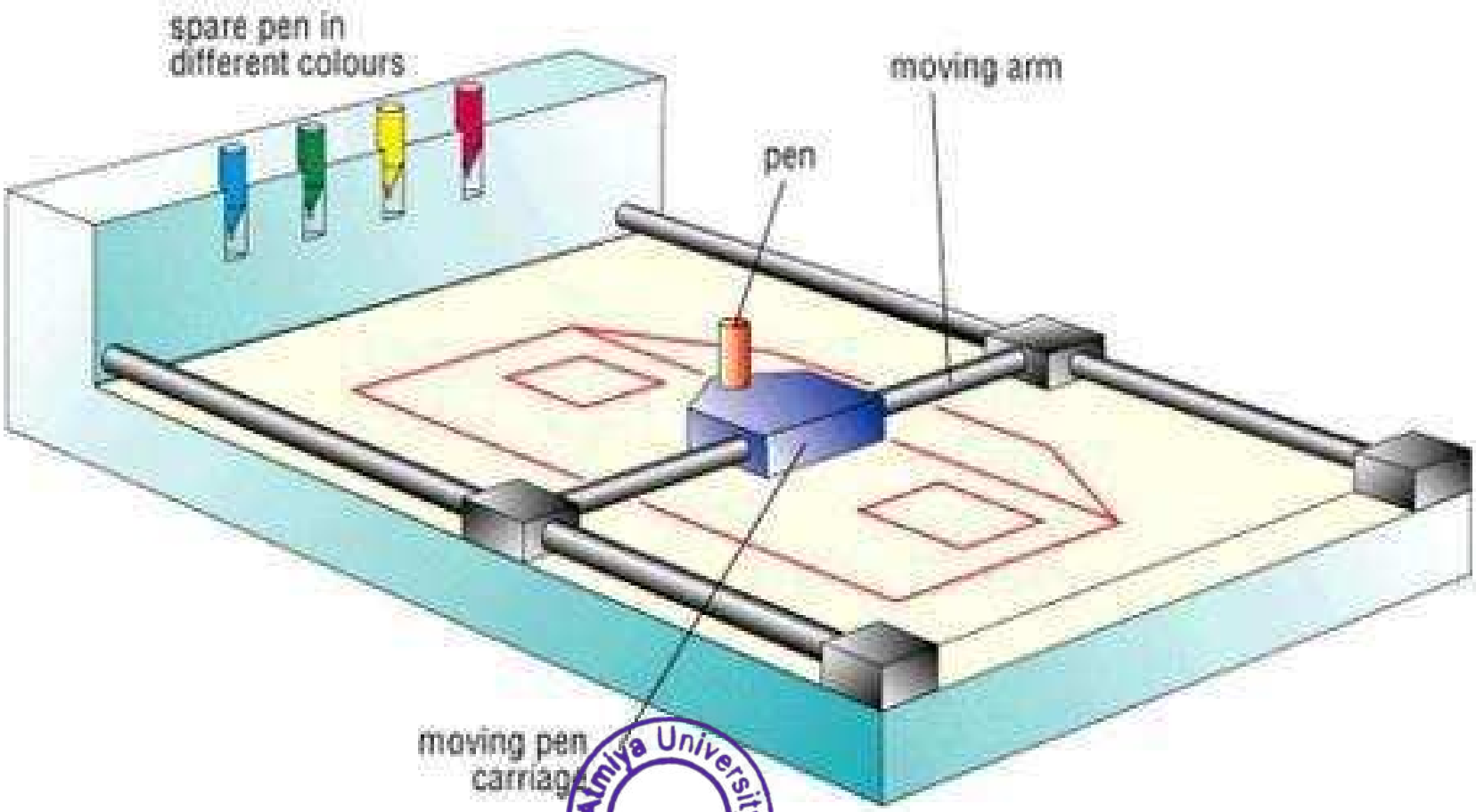

Atmiya University
Rajkot

Working

- As shown in fig. the drawing paper is attached on flat surface of the flat bed plotter.
- The flat bed carries guide ways on the two sides of the bed surface for the movement of crossbar.
- The pen holder is mounted on cross bar.
- Pen holder is able to move on cross slide.

Atmiya University
Rajkot

Drum type

Atmiya University
Rajkot

Working

- As shown in fig. drum plotter consist of a drum which can be rotated in both direction (+X & -X direction).
- The drum drives a continuous roll of paper.
- A pen holder is mounted on a carriage which can move along the drum(+Y & -Y direction)to plot lines.
- The motion of drum and pen holder is controlled as per the image data.
- Drum plotter can produce drawings of unlimited length but the width of drawing is limited by the drum length.

Atmiya University
Rajkot

Drum Plotter

Co-ordinate Systems

1) Modal Coordinate System (MCS)
2) Working or World Coordinate system (WCS)
3) Screen Coordinate System (SCS)

Coordinate Systems

In CAD three types of coordinate systems are needed in order to input, store and display model geometry and graphics. These are the Model Coordinate System (MCS), the World Coordinate System (WCS) and the Screen Coordinate System (SCS).

Model Coordinate System

The MCS is defined as the reference space of the model with respect to which all the model geometrical data is stored. The origin of MCS can be arbitrary chosen by the user.

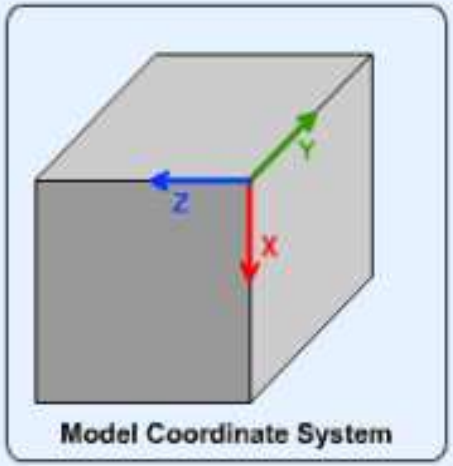

Model Coordinate System

Atmiya University Rajkot

World Coordinate System

As discussed above every object have its own MCS relative to which its geometrical data is stored. Incase of multiple objects in the same working space then there is need of a World Coordinate System which relates each MCS to each other with respect to the orientation of the WCS. It can be seen by the picture shown below.

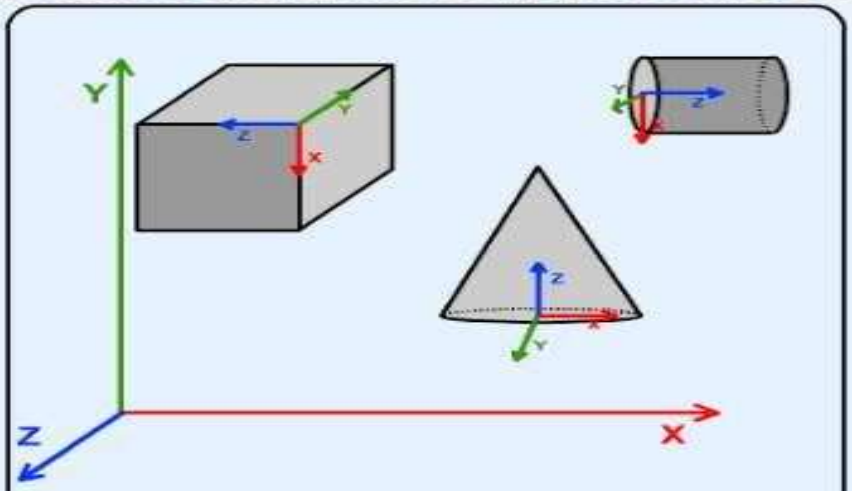

Different objects in reference with WCS.

Atmiya University Rajkot

Screen Coordinate System

In context to the MCS and WCS the Screen Coordinate System is defined as a two dimensional device-dependent coordinate system whose origin is usually located at the lower left corner of the graphics display as shown in the picture below. A transformation operation from MCS coordinates to SCS coordinates is performed by the software before displaying the model views and graphics.

Atmiya University Rajkot

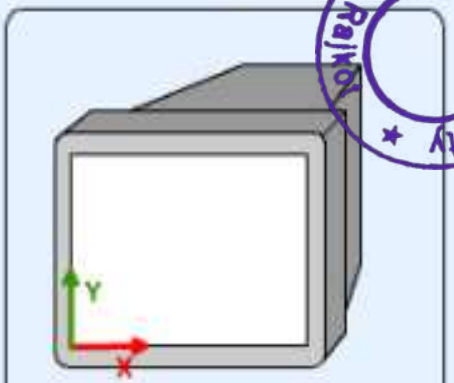

Screen Coordinate System

Graphics Exchange Standards

- The manufacturing of product involves product data to be handled from one place to another.
- One organization may developed a CAD model, while another does analysis work on the same model.
- Third organization may be responsible for manufacturing the product.
- Thus, a mechanism for efficient data transfer between two or more computer systems is needed.
- Application Programs for Finite Element mesh generation or NC tool path generation, require a description of the product or product definition data in the form of input.
- The product definition data of basically of two types.

Atmiya University Rajkot

- One type contains the data of a drawing which is composed of the vector data for lines and annotation data for the dimension values and symbols in the drawing.
- The second type of product definition data consist of solid model representation with associated annotation data.
- This database is to be used by finite element modeling, analysis,optimization,CNC part programming,NC tool path generation etc.
- The data exchange between two similar CAD systems does not create any problem as the product data are compatible in both systems.
- The product definition data can be transferred directly in two similar CAD systems.
- It is necessary to translate the product definition data of one system into a form that the other system can use.
- To facilitate the translation of product definition data, several standard formats to store these data have been proposed.

Atmiya University Rajkot

CAD Database

- CAD database contains both geometrical and non-geometrical description of product definition which is stored in computer system.
- The description of product definition may contain the following type of data.

1) Shape Data:-

Atmiya University
Rajkot

Data Exchange Standards

- Some of the popular data exchange standards are:

1) Initial Graphics Exchange Specification (IGES)

- IGES is the standard for the exchange of product definition data.
- It was developed by American National Standard Institute (ANSI) in 1980.
- IGES format is used for the translation of product definition data in to neural file.
- The model data file is translated into IGES file by preprocessor.
- While postprocessor translates IGES file into model data.
- IGES can also transfer both 2D and 3D finite elements data for an FEA type of analysis.

Atmiya University Rajkot

- The IGES contains geometric and non-geometric data,
- Geometric entities define the shape and size of product.
- It contains data about curves, surfaces and solids.
- Non-geometric entities include annotation and structure.
- The annotation may be dimensions,notes,labels,centerline etc. the structure entities may be views,drawings, attributes,symbols etc.

2) Product Data Exchange Specification (PDES)

- The PDES is a standard for the exchange and integrated use of product definition data over the life cycle of the product.
- PDES is developed by IGES Organization.
- PDES file contains geometric, non-geometric, design and manufacturing data for the product.
- The data representation in IGES is done with the use of entity whereas, the data representation in PDES is done through applications that contains various entities.

Atmiya University Rajkot

- The scope of PDES is enormous.
- It is envisioned to support all aspects of product description from product design,manufacture,quality,support and disposal.
- Product data include geometry,topology,tolerences, relationships, attributes and features which are required to completely define a part for the use of design,analysis,manufacture,quality and product support.

3) Drawing Exchange Format (DXF)

- DXF file is a popular data exchange format developed to give users flexibility in managing data and translating AutoCAD drawings into file formats that could be read and used by other CAD systems.
- DXF 3D format translates mode (part) files whereas, DXF/DWG translates drawing files.
- The DXF version R13 supports wireframe, surface, and solid representations.

Atmiya University Rajkot

- A DXF file consists of four sections: Header, Table, Block, and Entity section.
- The header section contains general information about the drawing.
- The table section contains definitions of line types, layers, text styles, views, etc.
- The block section contains entities for block definitions. These entities define the blocks used in the drawing. The format of the entities in the block section is identical to entities in the entity section.
- The entity section contains the drawing entities, including any block references. Items in the entity section exist also in the block section and the appearance of entities in the two sections is identical.

Atmiya University
Rajkot

4) Standard for the Exchange of Product Model Data (STEP)

- STEP (STandard for the Exchange of Product model data) is a new International Standard (ISO 10303) for representing and exchanging product model information.
- STEP defines also implementation methods, for instance, a physical transfer file, and offers different resources, e.g. geometric and topological representation.
- The goal was to define a standard to cover all aspects of a product (i.e. geometry, topology, tolerances,materials, etc.), during its lifetime.
- STEP does not only define the geometric shape of a product: it also includes topology, features, tolerance specifications, material properties, etc. necessary to completely define a product for the purposes of design, analysis, manufacture, test, inspection and product support.

Atmiya University Rajkot

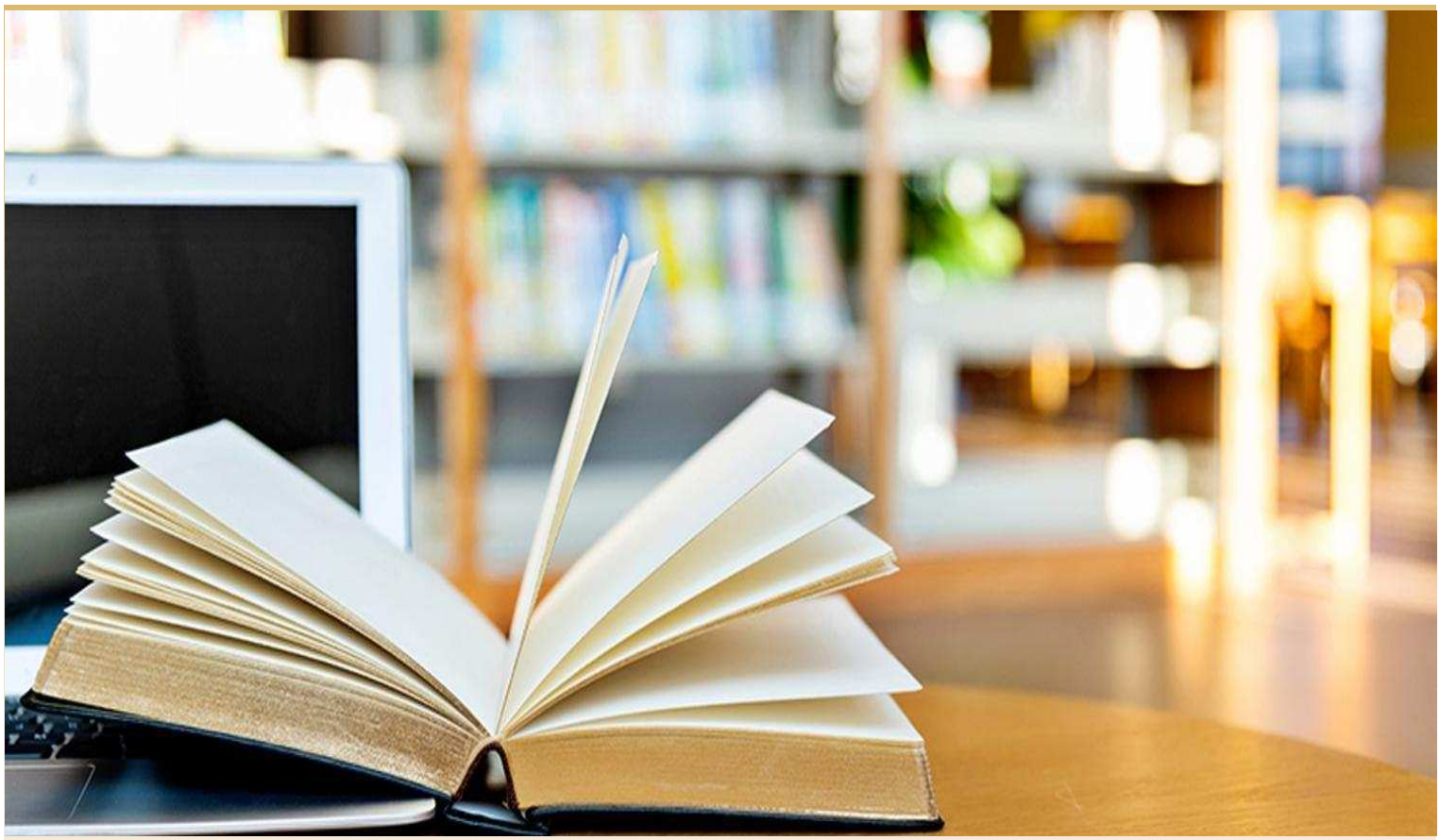

Study Material

Statistical Quality Control (21BTMECC504)

B.Tech Mechanical-Semester-V

Dr. Jinesh B. Shah

Offered by Mechanical Engineering Department

Atmiya University Rajkot

ATMIYA UNIVERSITY

(Established under the Gujarat Private University Act 11, 2018)

Yogidham Gurukul, Kalawad Road, Rajkot - 360005, Gujarat (INDIA)

PREFACE

About Course

This course reinforces the basic understanding of requirement of quality and its statistical method. It helps in understanding the importance of quality assurance and Total Quality Management. It also covers the basic understanding of attributes and variable charts. It also covers the knowledge acceptance sampling method and importance of quality circle to solve quality related issue.

Course Outcome

1. Relate need, purpose and importance of statistical quality control in current era.
2. Apply the concept of Total Quality Management and failure mode.
3. Express the main attributes of Quality Assurance System
4. Solve quality related issue using attributes and variables charts.
5. Develop basic Understanding of sampling plan and quality circle to solve quality related issue.

Remarks about material content

Understand the philosophy and basic concepts of quality improvement. Demonstrate the ability to design, use, and interpret control charts for variables. This course provides understanding and importance of Total Quality Management and Quality Assurance to match the quality standard. This course will also inculcate acceptance sampling and quality circle method to evaluate quality standard.

REVISION HISTORY

Version	Date	Author	Revision Summary
1	07-21-2023	Mr. Jinesh B. Shah Assistant Professor Dept. of Mechanical Engineering	1st Edition

Atmiya University Rajkot

STATISTICAL QUALITY CONTROL (21BTMECC504)

UNIT-1: BASIC CONCEPTS OF QUALITY AND STATICS

Unit Content

- Need, importance and scope of statistical quality control in engineering industries
- Quality meaning, quality of design and quality of commerce
- Quality of performance, quality function and quality control
- Quality characteristics, quality value and quality specification
- Quality control and inspection
- Quality policy and statistical quality control
- Role of feedback in quality control

Statics Theory:

- Measures of central tendency
- Mean, Median, Mode
- Standard deviation, variance

1 NEED, IMPORTANCE AND SCOPE OF STATISTICAL QUALITY CONTROL IN ENGINEERING INDUSTRIES

1. **Need for Statistical Quality Control:**

- Consistency and Uniformity: Engineering industries need to maintain consistent quality and uniformity in their products or services to meet customer expectations and comply with industry standards.
- Cost Reduction: Poor quality can lead to increased costs due to defects, rework, and customer complaints. SQC helps identify and rectify issues early, reducing waste and costs.
- Risk Mitigation: SQC minimizes the risk of producing faulty products, which can lead to safety hazards, liability issues, and damage to the company's reputation.
- Regulatory Compliance: Many engineering industries must adhere to strict quality standards and regulations. SQC helps ensure compliance with these requirements.
- Data-Driven Decision Making: SQC provides objective data and insights, enabling better decision-making to improve processes and product quality.

2. **Importance of Statistical Quality Control:**

- **Process Control:** SQC allows industries to monitor production processes in real-time, identifying variations and taking corrective actions to maintain process stability and consistency.
- **Defect Reduction:** By analyzing data and detecting the root causes of defects, SQC helps engineering industries reduce defects and improve overall product quality.
- **Continuous Improvement:** SQC fosters a culture of continuous improvement by providing data-driven feedback, encouraging the implementation of better practices and technologies.
- **Customer Satisfaction:** High-quality products lead to increased customer satisfaction, loyalty, and positive word-of-mouth, which are crucial for sustained business success.
- **Competitive Advantage:** Companies that implement effective SQC strategies can gain a competitive edge by delivering superior products and services.

Atmiya University Rajkot

3. Scope of Statistical Quality Control:

- **Process Monitoring:** SQC involves the use of control charts to monitor key process parameters, ensuring they remain within specified control limits. Deviations beyond these limits trigger investigations and corrective actions.
- **Statistical Sampling:** SQC employs statistical sampling techniques to assess the quality of a batch or a population of products without the need for 100% inspection.
- **Root Cause Analysis:** SQC helps identify the root causes of defects by analyzing data and using tools like Pareto charts, cause-and-effect diagrams, and scatter plots.
- **Design of Experiments (DOE):** DOE is a part of SQC that helps optimize processes and product designs by systematically varying process factors and identifying the optimal combination for improved quality.

Six Sigma: SQC is closely related to Six Sigma, a data-driven methodology that aims to achieve near-perfect quality by reducing process variation and defects.

2 QUALITY

Quality refers to the degree of excellence or superiority of a product, service, or process compared to the requirements, expectations, and needs of the customer or end-user. It is a multi-dimensional concept that encompasses various aspects, including performance, reliability, durability, safety, and usability, aesthetics, and customer satisfaction. In essence, quality signifies that a product or service meets or exceeds the desired standards and fulfills its intended purpose without defects or deficiencies.

3 QUALITY OF PERFORMANCE

Quality of performance, also known as performance quality or product quality, refers to the ability of a product or service to meet the specified requirements and perform its intended functions efficiently and effectively. It is an essential aspect of quality management, as it directly impacts customer satisfaction and overall success in the market. The focus of quality of performance is on

Atmiya University Rajkot

evaluating the actual outcomes and capabilities of the product or service, as opposed to the design or intended features.

Key aspects of quality of performance include:

- **Conformance to Specifications:** The extent to which a product or service adheres to the defined specifications and standards.
- **Reliability:** The ability of a product or service to perform consistently and predictably under normal operating conditions without failures or breakdowns.
- **Durability:** The expected lifespan and resistance to wear and tear or degradation over time.
- **Functionality:** How well the product or service performs its intended functions and meets the needs of the user.
- **Efficiency:** The level of resource utilization and performance in relation to the input required.

4 QUALITY CONTROL

Quality control (QC) is a systematic process used to monitor and evaluate the quality of products, services, or processes during and after production or service delivery. Its primary objective is to identify and rectify deviations or defects to ensure that the final output meets the desired quality standards. Quality control is often implemented through various inspection and testing techniques, along with data analysis and statistical tools.

Key components of Quality Control include:

- **Inspection:** Examining products or services to identify defects or deviations from the required standards.
- **Testing:** Conducting tests and experiments to assess product performance and reliability.
- **Statistical Process Control (SPC):** Using statistical tools and control charts to monitor process performance and identify variations.
- **Corrective Actions:** Taking necessary actions to rectify deviations and improve quality.

Atmiya University Rajkot

5 QUALITY CHARACTERISTICS

Quality characteristics, also known as quality attributes or quality parameters are specific features or attributes that define the overall quality of a product or service. These characteristics are essential for meeting customer needs, ensuring satisfaction, and achieving business success. The selection and prioritization of quality characteristics vary depending on the nature of the product or service and the industry. Here are some common quality characteristics found in various products and services:

1. Performance: This refers to how well a product or service performs its intended functions. It assesses the efficiency, accuracy, speed, and effectiveness of the product or service in meeting user requirements.

2. Reliability: Reliability is the ability of a product or service to consistently perform without failures or breakdowns over a specified period. It relates to the product's ability to maintain its performance over time.

3. Durability: Durability measures the lifespan and resistance to wear and tear of a product. It indicates how long the product can remain functional under normal operating conditions.

4. Usability: Usability focuses on the ease of use and user-friendliness of a product or service. It involves factors such as intuitiveness, simplicity, and clear instructions.

5. Safety: Safety is critical for products that pose potential risks to users or the environment. It assesses the product's ability to avoid hazards and prevent accidents.

6. Aesthetics: Aesthetics refers to the visual appeal and design aesthetics of a product. It includes factors such as color, shape, size, and overall appearance.

Atmiya University Rajkot

7. Serviceability/Maintainability: For products that require maintenance or repairs, serviceability measures how easily and quickly the product can be serviced or maintained.

8. Cost: Cost is a significant quality characteristic, especially for customers who prioritize affordability. It considers the overall cost of ownership, including purchase cost, maintenance cost, and operating expenses.

9. Time-to-Market: This characteristic is particularly relevant for industries with rapid product development cycles. It measures the time taken to develop and launch a product or service to the market.

10. Environmental Impact: This quality characteristic evaluates a product's or service's impact on the environment, including factors like energy efficiency, emissions, and recyclability.

11. Customer Support: For services, customer support quality assesses the efficiency and effectiveness of customer service and support provided to users.

12. Innovation: This characteristic focuses on the level of novelty, uniqueness, and innovative features that a product or service offers in the market.

13. Compliance and Regulatory Conformance: This characteristic evaluates whether the product or service meets all relevant industry standards, regulations, and certifications.

14. Customization/Personalization: For certain products and services, the ability to be customized or personalized to individual needs and preferences is a critical quality characteristic.

6 QUALITY INSPECTION

Quality inspection, on the other hand, is a specific activity within the quality control process. It involves examining and evaluating products or services at specific checkpoints or stages to assess their conformity to predetermined quality standards. Inspection is typically conducted at various points during the

Atmiya University Rajkot

production process or after service delivery, and it is a reactive approach that detects and identifies defects or deviations after they have occurred.

Key characteristics of Quality Inspection include:

- **Sample-Based:** Inspection often involves examining a sample of products or services rather than inspecting every single unit (100% inspection).
- **End-Product Focus:** Inspection centers on the final product or service to determine whether it meets the specified requirements.
- **Identification of Defects:** The main purpose of inspection is to detect and identify defects or non-conformities.
- **Corrective:** While inspection identifies defects, it is not the final step in the quality control process. Corrective actions may be required to address the issues found during inspection and prevent future occurrences.

7 ROLE OF FEEDBACK IN QUALITY CONTROL

Feedback plays a crucial role in quality control as it provides valuable information and insights that help organizations monitor, assess, and improve the quality of their products or services. Feedback is a two-way communication process that involves gathering information from various sources, analyzing it, and using the findings to make informed decisions and implement necessary changes. Here are the key roles of feedback in quality control:

1. **Performance Monitoring:** Feedback allows organizations to continuously monitor the performance of their products or services. By collecting data on various quality parameters, such as defects, customer complaints, and performance metrics, organizations can identify areas of improvement and potential issues.
2. **Defect Detection and Root Cause Analysis:** Feedback helps in the early detection of defects and non-conformities. When customers or internal processes identify problems, organizations can use the feedback data to conduct root cause analysis and determine the underlying reasons for the issues.

Atmiya University Rajkot

3. **Customer Satisfaction:** Feedback from customers provides direct insight into their experiences and satisfaction levels. Positive feedback helps validate that the organization is meeting customer expectations, while negative feedback signals areas that require improvement.
4. **Continuous Improvement:** Feedback is a fundamental aspect of the continuous improvement process. By understanding the strengths and weaknesses of products or services, organizations can implement changes to enhance quality, efficiency, and customer satisfaction.
5. **Decision Making:** Feedback serves as a valuable data source for decision-making in quality control. Whether it's determining which processes to optimize, prioritizing improvement initiatives, or making changes to product designs, feedback informs these critical decisions.
6. **Process Optimization:** Feedback data helps identify bottlenecks and inefficiencies in production or service delivery processes. By analyzing this information, organizations can optimize processes to reduce defects and improve overall quality.
7. **Benchmarking:** Feedback can be compared against industry standards and best practices to benchmark an organization's performance. This comparison helps identify areas where the organization is excelling or lagging behind in terms of quality.
8. **Employee Engagement:** Feedback also involves input from employees involved in the production or service delivery processes. Engaging employees in the feedback process fosters a culture of quality consciousness, ownership, and accountability.
9. **Compliance and Regulatory Conformance:** Feedback from internal audits and external regulatory bodies helps ensure that the organization complies with industry standards, regulations, and certifications.
10. **Feedback Loop Closure:** Effective feedback management includes closing the feedback loop. This involves acknowledging and acting on customer complaints or suggestions, communicating resolutions, and demonstrating a commitment to quality improvement.

Atmiya University Rajkot

8 CENTRAL TENDENCY

Measures of central tendency are statistical indicators that represent the typical or central value of a data set. They provide insights into the central or average position of the data distribution, helping to summarize and understand the data. The three main measures of central tendency are:

1. Mean: The mean is the most common measure of central tendency and is often referred to as the average. It is calculated by summing up all the values in the data set and then dividing the sum by the total number of data points. The formula for the mean of a data set with n data points is:

   Mean = (Sum of all data points) / n

   The mean is sensitive to extreme values, and it may not accurately represent the data if the distribution is skewed or has outliers.

2. Median: The median is the middle value in an ordered data set when the values are arranged in ascending or descending order. If the data set has an odd number of data points, the median is the middle value itself. If the data set has an even number of data points, the median is the average of the two middle values.

   For example, in the data set [3, 6, 8, 10, 12], the median is 8. In the data set [3, 6, 8, 10], the median is (6 + 8) / 2 = 7.

   The median is robust to extreme values and is a better measure of central tendency for skewed data or data sets with outliers.

3. Mode: The mode is the value that appears most frequently in the data set. In some cases, a data set may have multiple modes (bimodal, trimodal, etc.), or it may have no mode if all values are equally distributed.

   For example, in the data set [2, 4, 6, 6, 8, 8, 10], the mode is 6 and 8.

   The mode is useful for categorical or discrete data, and it can be used for continuous data as well.

Atmiya University Rajkot

9 DIFFERENCE BETWEEN QUALITY CONTROL AND QUALITY ASSURANCE

	Quality Control	Quality Assurance
Purpose	QC is the process of inspecting, testing, and evaluating products or services to identify and correct any defects or deviations from the desired quality.	QA refers to the planned and systematic activities implemented within an organization to ensure that processes are designed and executed in a way that will result in high-quality products or services.
Timing	QC activities take place after the product or service has been produced or delivered. It involves the examination and testing of the final output to verify its quality.	QA activities occur throughout the entire product development or service delivery process. It starts from the early planning and design stages and continues through implementation and post-delivery
Objective	QC aims to identify and correct defects or variations from the desired quality in the final output. Its primary focus is on the inspection and correction of finished products or services.	The main objective of QA is to prevent defects and ensure that processes are efficient, effective, and aligned with established standards. QA aims to build quality into the process.
Responsibility	QC is typically performed by a dedicated team or individuals responsible for inspecting and testing the products or services.	QA is the responsibility of the entire organization. It involves everyone in the organization working together to adhere to quality standards and processes.
Approach	QC is a reactive approach that focuses on identifying and correcting issues after they have occurred. It aims to ensure that the final output meets the required quality standards.	QA is a proactive approach that focuses on preventing issues before they occur. It emphasizes continuous improvement and process optimization.

Atmiya University Rajkot

STATISTICAL QUALITY CONTROL (21BTMECC504)

UNIT-2: TOTAL QUALITY MANAGEMENT (TQM)

Unit Content

- Total quality control and need of product quality
- Concept of Total Quality Management
- ISO: 9001 and TQM
- Concept and component of reliability
- Types of failure
- Success and failure mode in series and parallel

10 TOTAL QUALITY CONTROL

Total Quality Control (TQC) is a management philosophy and approach that focuses on ensuring product and service quality by involving all employees at every level of an organization. It is a comprehensive system that aims to improve processes, products, and services continuously. TQC is often associated with the Japanese approach to quality management, particularly with the concept of "Kaizen" (continuous improvement).

Key principles of Total Quality Control include:

1. Customer Focus: TQC places a strong emphasis on understanding and meeting customer needs and expectations. Customer satisfaction is a primary goal, and products and services are designed and improved with the customer in mind.
2. Employee Involvement: TQC recognizes that quality is everyone's responsibility within the organization. Employees are encouraged to participate actively in problem-solving, process improvement, and quality enhancement initiatives.
3. Continuous Improvement: Kaizen is at the core of TQC. The philosophy emphasizes the importance of continuous incremental improvements in all aspects of the organization, aiming for higher quality and efficiency over time.
4. Process-Oriented Approach: TQC focuses on the improvement of processes rather than just the final output. By optimizing processes, the organization can achieve consistent, high-quality results.
5. Data-Driven Decision Making: Decisions related to quality are based on data and facts rather than assumptions or guesswork. Statistical tools and analysis are often used to identify and address issues effectively.
6. Supplier Relationships: TQC extends its focus beyond the organization to include suppliers. Building strong relationships with suppliers and ensuring their commitment to quality helps maintain consistency in the supply chain.

Atmiya University Rajkot

7. Training and Education: Employees receive proper training and education to understand the principles of TQC, quality standards, and the tools and techniques required for improvement.
8. Zero Defects: The ultimate goal of TQC is to achieve zero defects in products and services. Although complete elimination of defects might not be entirely achievable, striving for perfection is seen as a driving force for continuous improvement.

11 TOTAL QUALITY MANAGEMENT

The concept of Total Quality Management (TQM) is a comprehensive and systematic approach to managing an organization with the goal of continuously improving the quality of its products, services, and processes. TQM is not just a single technique or tool; instead, it is a philosophy that permeates every aspect of an organization and involves all employees, from top management to frontline workers.

Here are some key components and principles that make up the concept of Total Quality Management:

1. Customer Focus: TQM begins with a strong emphasis on understanding and meeting customer needs and expectations. Customer satisfaction is considered the ultimate measure of quality success.
2. Continuous Improvement (Kaizen): TQM is built on the idea of continuous improvement, where organizations constantly strive to make incremental advancements in processes and products. This involves identifying problems, eliminating defects, and optimizing operations on an ongoing basis.
3. Employee Involvement: TQM recognizes that quality is everyone's responsibility. Employees are encouraged to actively participate in problem-solving, process improvement, and quality enhancement initiatives. Their expertise and insights are valuable resources in achieving better results.

Atmiya University Rajkot

4. Process-Oriented Approach: TQM focuses on understanding and improving the processes that create products or deliver services. By optimizing these processes, organizations can achieve consistent and high-quality results.
5. Data-Driven Decision Making: TQM emphasizes making decisions based on data and objective analysis rather than intuition or guesswork. Statistical tools and data analysis are commonly used to identify areas for improvement and measure progress.
6. Supplier Relationships: TQM extends its quality efforts to include suppliers. Building strong relationships with suppliers and collaborating closely with them can ensure a consistent flow of high-quality inputs.
7. Leadership Commitment: Top management plays a critical role in driving and supporting TQM initiatives. Their commitment to quality, providing necessary resources, and fostering a culture of continuous improvement are vital for TQM's success.
8. Training and Education: TQM emphasizes the importance of providing ongoing training and education to employees. This ensures that they have the necessary skills and knowledge to contribute effectively to the organization's quality improvement efforts.
9. Benchmarking: TQM encourages organizations to compare their performance against industry benchmarks and best practices. This helps identify areas for improvement and opportunities to learn from others.
10. Zero Defects: While achieving perfection may be challenging, TQM aims for zero defects as an aspirational goal, continuously striving to reduce errors and defects in processes and products.

By adopting the concept of Total Quality Management, organizations can foster a culture of quality, continuous improvement, and customer focus, which can lead to enhanced customer satisfaction, increased efficiency, reduced costs, and improved overall performance and competitiveness in the market.

Atmiya University Rajkot

12 ISO: 9001

ISO 9001 is an international standard developed by the International Organization for Standardization (ISO). It sets out the criteria for a quality management system (QMS) and provides guidelines for organizations to follow to ensure they meet customer requirements consistently while enhancing customer satisfaction.

Key features of ISO 9001 include:

1. Process Approach: ISO 9001 emphasizes the use of a process-based approach, where organizations identify and manage the various interconnected processes that contribute to delivering a product or service.
2. Customer Focus: Like TQM, ISO 9001 places a strong emphasis on customer satisfaction. Organizations are required to identify and meet customer needs effectively.
3. Continual Improvement: The standard advocates for a commitment to continual improvement, encouraging organizations to assess their processes regularly and find ways to enhance efficiency and effectiveness.
4. Documentation: ISO 9001 requires the creation and maintenance of documentation related to quality processes, procedures, and records. This ensures that important information is documented and accessible to employees.
5. External Certification: Organizations can undergo external audits to achieve ISO 9001 certification, which demonstrates their compliance with the standard's requirements. This certification can enhance an organization's reputation and credibility in the marketplace.

13 CONCEPT OF RELIABILITY

The concept of reliability refers to the ability of a product, system, or process to consistently perform its intended function under specific conditions for a specified period. It is a critical aspect of quality and is relevant in various fields, including engineering, manufacturing, software development, and service industries.

Atmiya University Rajkot

Key points about reliability include:

1. Consistency: Reliability is all about consistency and predictability. A reliable product or system should perform its intended function repeatedly and without unexpected failures or deviations.
2. Probability of Failure: Reliability is often quantified as the probability of a product or system failing within a certain period. For example, a reliability metric of 99.9% over one year means that there is a 0.1% chance of failure within that time frame.
3. Mean Time Between Failures (MTBF): MTBF is a common reliability metric that represents the average time between consecutive failures of a product or system. A higher MTBF indicates higher reliability.
4. Mean Time to Failure (MTTF): MTTF is used for non-repairable systems and represents the average time until the first failure occurs.
5. Factors Affecting Reliability: Reliability can be influenced by various factors, such as design quality, manufacturing processes, materials used, maintenance practices, environmental conditions, and operating stresses.
6. Reliability Engineering: Reliability engineering is a field that focuses on designing, testing, and improving products and systems to achieve higher reliability levels. It involves techniques like Failure Modes and Effects Analysis (FMEA), Fault Tree Analysis (FTA), and accelerated life testing.
7. Redundancy: In critical applications, redundancy can be used to enhance reliability. Redundancy involves having backup components or systems that can take over if the primary one fails.
8. Reliability vs. Availability: Reliability refers to the likelihood of failure, whereas availability refers to the ability of a system to be operational when needed, accounting for maintenance and repair time.
9. Reliability in Services: Reliability is not limited to tangible products or systems; it is also relevant in service industries. For example, a reliable internet

Atmiya University Rajkot

service provider should consistently deliver the promised internet speed without frequent interruptions.

10. Customer Perception: Reliability plays a crucial role in customer satisfaction. Customers generally prefer products or services that they can rely on consistently.

11. Reliability Testing: Reliability testing is performed to assess and validate the reliability of a product or system. It involves subjecting the item to various stresses and conditions to simulate real-world usage and evaluate its performance over time.

14 MEANING OF MTBF, MTTF AND MTTR

MTBF, MTTF, and MTTR are important metrics used to assess the reliability and maintainability of systems, products, or equipment. Each metric provides valuable insights into different aspects of a system's performance. Let's explore the meanings of these terms:

MTBF - Mean Time between Failures:

MTBF stands for Mean Time Between Failures. It is a measure of the average time that a system, product, or equipment operates continuously without experiencing a failure. MTBF is typically used for systems that are repairable, meaning they can be restored to their functioning state after a failure.

MTBF is calculated as the total operating time divided by the number of failures:

MTBF = Total Operating Time / Number of Failures

A higher MTBF indicates that the system is more reliable, as it can operate for longer periods between failures. It is an essential metric for understanding the expected reliability of a system and for estimating maintenance and downtime requirements.

Atmiya University Rajkot

MTTF - Mean Time to Failure:

MTTF stands for Mean Time To Failure. It is a measure of the average time until a non-repairable system, product, or equipment fails. In the case of non-repairable systems, once a failure occurs, the system cannot be restored to its original state.

MTTF is calculated as the total operating time divided by the number of failures:

MTTF = Total Operating Time / Number of Failures

MTTF is commonly used for components or devices that are considered consumables and are not repairable. For example, light bulbs are non-repairable; once they fail, they need to be replaced.

MTTR - Mean Time To Repair:

MTTR stands for Mean Time To Repair. It is a measure of the average time required to repair a system, product, or equipment after a failure occurs. MTTR is used for repairable systems.

MTTR is calculated as the sum of all downtime periods due to failures divided by the number of failures:

MTTR = Total Downtime / Number of Failures

A lower MTTR indicates that the system is more maintainable, as it can be repaired quickly, reducing the impact of failures on productivity or service availability.

Atmiya University Rajkot

ABOUT AUTHOR

The author Mr. Jinesh B. Shah is affiliated with Atmiya Group of Institutions, Rajkot. His subject expertise is Engineering Drawing, Solid Mechanics and Thermal domain related subject. Besides this the author is also embroiled in educating subjects related to renewable energy sources.

Correspondence

Mr. Jinesh B. Shah
Department of Mechanical Engineering
Faculty of Engineering and Technology
Atmiya University
jinesh.shah@atmiyauni.ac.in

Atmiya University, Rajkot
Faculty of Engineering & Technology

Department of Mechanical Engineering

Prepared by: Shivang S. Jani

Course: Theory of Machines(21BTMECC303)

Unit I: Introduction to Machines and Mechanism

Contents

- Need, scope and importance of kinematics of machines in the industries
- Concepts of Kinematics and Dynamics
- Kinematic Links
- Types of Constrained Motions
- Kinematic Pair
- Kinematic Chain
- Degrees of freedom/mobility of a mechanism
- Inversion of Mechanism
- Straight line mechanism's

Atmiya University Rajkot

Need, scope and importance of kinematics of machines in the industries

Atmiya University
Rajkot

Kinematic Chain

When the kinematic pairs are coupled in such a way that the last link is joined to the first link to transmit definite motion (*i.e.* completely or successfully constrained motion), it is called a ***kinematic chain.*** In other words, a kinematic chain may be defined as a combination of kinematic pairs, joined in such a way that each link forms a part of two pairs and the relative motion between the links or elements is completely or successfully constrained. For example, the crankshaft of an engine forms a kinematic pair with the bearings which are fixed in a pair, the connecting rod with the crank forms a second kinematic pair, the piston with the connecting rod forms a third pair and the piston with the cylinder forms a fourth pair. The total combination of these links is a kinematic chain.

Lawn-mover is a combination of kinematic links.

Atmiya University Rajkot

If each link is assumed to form two pairs with two adjacent links, then the relation between the number of pairs (p) forming a kinematic chain and the number of links (l) may be expressed in the form of an equation :

$$l = 2p - 4 \qquad \ldots (i)$$

Since in a kinematic chain each link forms a part of two pairs, therefore there will be as many links as the number of pairs.

Another relation between the number of links (l) and the number of joints (j) which constitute a kinematic chain is given by the expression :

$$j = \frac{3}{2} l - 2 \qquad \ldots (ii)$$

The equations (i) and (ii) are applicable only to kinematic chains, in which lower pairs are used. These equations may also be applied to kinematic chains, in which higher pairs are used. In that case each higher pair may be taken as equivalent to two lower pairs with an additional element or link.

Let us apply the above equations to the following cases to determine whether each of them is a kinematic chain or not.

Atmiya University Rajkot

1. Consider the arrangement of three links AB, BC and CA with pin joints at A, B and C as shown in Fig. 5.6. In this case,

Number of links, $l = 3$

Number of pairs, $p = 3$

and number of joints, $j = 3$

From equation (*i*), $l = 2p - 4$

or $3 = 2 \times 3 - 4 = 2$

i.e. L.H.S. > R.H.S.

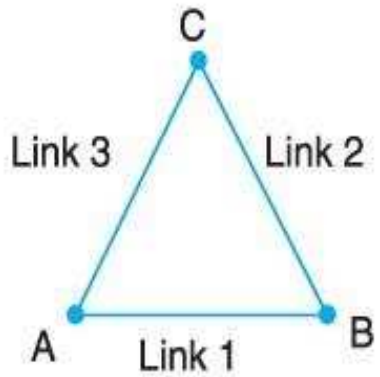

Fig. 5.6. Arrangement of three links.

Now from equation (*ii*),

$$j = \frac{3}{2} l - 2 \quad \text{or} \quad 3 = \frac{3}{2} \times 3 - 2 = 2.5$$

i.e. L.H.S. > R.H.S.

Since the arrangement of three links, as shown in Fig. 5.6, does not satisfy the equations (*i*) and (*ii*) and the left hand side is greater than the right hand side, therefore it is not a kinematic chain and hence no relative motion is possible. Such type of chain is called ***locked chain*** and forms a rigid frame or structure which is used in bridges and trusses.

Atmiya University Rajkot

2. Consider the arrangement of four links AB, BC, CD and DA as shown in Fig. 5.7. In this case

$$l = 4,\ p = 4, \text{ and } j = 4$$

From equation *(i)*, $\quad l = 2p - 4$

$$4 = 2 \times 4 - 4 = 4$$

i.e. $\quad$ L.H.S. = R.H.S.

From equation *(ii)*, $\quad j = \frac{3}{2}l - 2$

$$4 = \frac{3}{2} \times 4 - 2 = 4$$

i.e. $\quad$ L.H.S. = R.H.S.

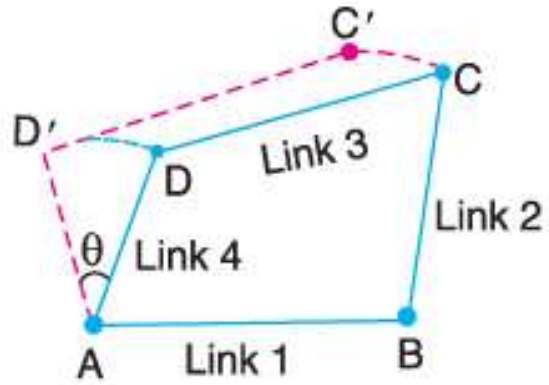

Fig. 5.7. Arrangement of four links.

Since the arrangement of four links, as shown in Fig. 5.7, satisfy the equations *(i)* and *(ii)*, therefore it is a ***kinematic chain of one degree of freedom***.

A chain in which a single link such as AD in Fig. 5.7 is sufficient to define the position of all other links, it is then called a kinematic chain of one degree of freedom.

A little consideration will show that in Fig. 5.7, if a definite displacement (say θ) is given to the link AD, keeping the link AB fixed, then the resulting displacements of the remaining two links BC and CD are also perfectly definite. Thus we see that in a four bar chain, the relative motion is completely constrained. Hence it may be called as a ***constrained kinematic chain***, and it is the basis of all machines.

Atmiya University Rajkot

3. Consider an arrangement of five links, as shown in Fig. 5.8. In this case,

$$l = 5, p = 5, \text{ and } j = 5$$

From equation *(i)*,

$$l = 2p - 4 \quad \text{or} \quad 5 = 2 \times 5 - 4 = 6$$

i.e. L.H.S. < R.H.S.

From equation *(ii)*,

$$j = \frac{3}{2} l - 2 \quad \text{or} \quad 5 = \frac{3}{2} \times 5 - 2 = 5.5$$

i.e. L.H.S. < R.H.S.

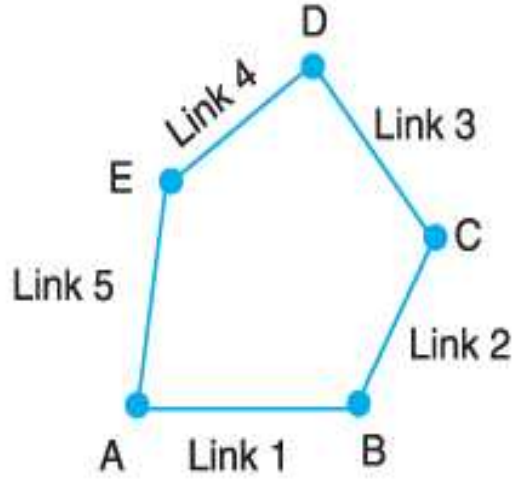

Fig. 5.8. Arrangement of five links.

Since the arrangement of five links, as shown in Fig. 5.8 does not satisfy the equations and left hand side is less than right hand side, therefore it is not a kinematic chain. Such a type of chain is called ***unconstrained chain*** *i.e.* the relative motion is not completely constrained. This type of chain is of little practical importance.

4. Consider an arrangement of six links, as shown in Fig. 5.9. This chain is formed by adding two more links in such a way that these two links form a pair with the existing links as well as form themselves a pair. In this case

$$l = 6, p = 5, \text{ and } j = 7$$

Atmiya University Rajkot

From equation (*i*),

$$l = 2p - 4 \quad \text{or} \quad 6 = 2 \times 5 - 4 = 6$$

i.e. L.H.S. = R.H.S.

From equation (*ii*),

$$j = \frac{3}{2} l - 2 \quad \text{or} \quad 7 = \frac{3}{2} \times 6 - 2 = 7$$

i.e. L.H.S. = R.H.S.

Since the arrangement of six links, as shown in Fig. 5.9, satisfies the equations (*i.e.* left hand side is equal to right hand side), therefore it is a kinematic chain.

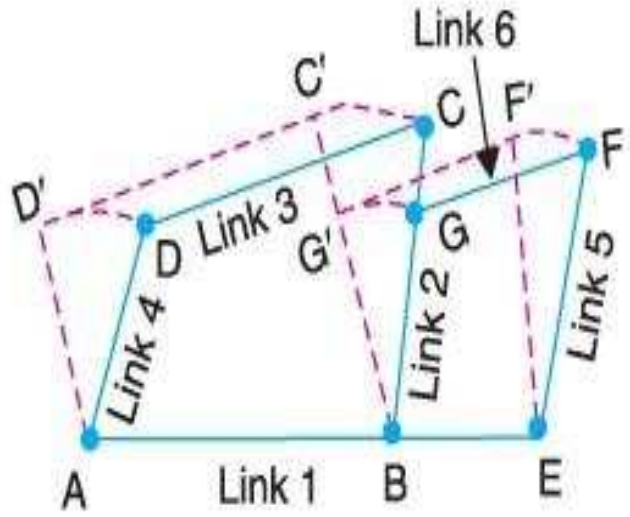

Fig. 5.9. Arrangement of six links.

Note : A chain having more than four links is known as **compound kinematic chain.**

Atmiya University Rajkot

Number of Degrees of Freedom for Plane Mechanisms

- In the design or analysis of a mechanism, one of the most important concern is the number of degrees of freedom (also called movability) of the mechanism.
- It is defined as the number of input parameters (usually pair variables) which must be independently controlled in order to bring the mechanism into a useful engineering purpose.
- It is possible to determine the number of degrees of freedom of a mechanism directly from the number of links and the number and types of joints which it includes.

Atmiya University Rajkot

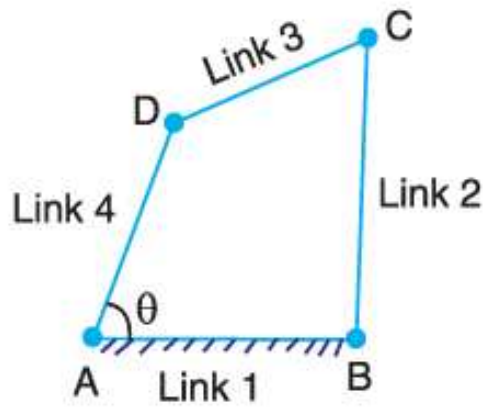

(*a*) Four bar chain.

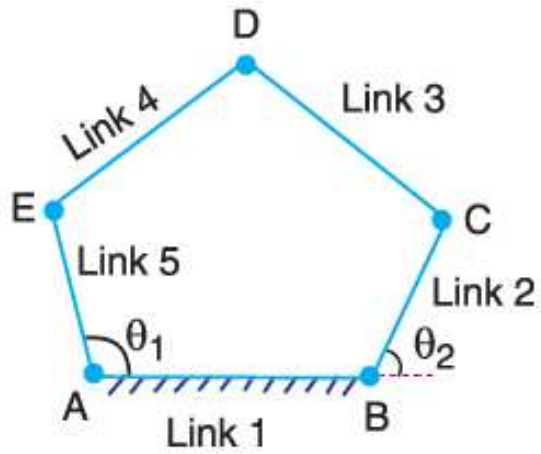

(*b*) Five bar chain.

- Consider a four bar chain, as shown in Fig. (a). A little consideration will show that only one variable such as is needed to define the relative positions of all the links.
- In other words, we say that the number of degrees of freedom of a four bar chain is one.
- Now, let us consider a five bar chain, as shown in Fig. (b). In this case two variables such as 1 and 2 are needed to define completely the relative positions of all the links. Thus, we say that the number of degrees of freedom is two.

Atmiya University Rajkot

Kutzbach Criterion

- let us consider a plane mechanism with l number of links.
- Since in a mechanism, one of the links is to be fixed, therefore the number of movable links will be (l – 1) and thus the total number of degrees of freedom will be 3 (l – 1) before they are connected to any other link.
- In general, a mechanism with l number of links connected by j number of binary joints or lower pairs (i.e. Single degree of freedom pairs) and h number of higher pairs (i.e. two degree of freedom pairs), then the number of degrees of freedom of a mechanism is given by,

$$n = 3\,(l - 1) - 2\,j - h$$

- This equation is called Kutzbach criterion for the movability of a mechanism having plane motion.
- If there are no two degree of freedom pairs (i.e. higher pairs), then h = 0. Substituting h = 0 in above equation, we have

$$n = 3\,(l - 1) - 2\,j$$

Atmiya University Rajkot

Grubler's Criterion for Plane Mechanisms

- The Grubler's criterion applies to mechanisms with only single degree of freedom joints where the overall movability of the mechanism is unity. Substituting n = 1 and h = 0 in Kutzbach equation, we have

$$1 = 3(l - 1) - 2j \qquad \text{or} \qquad 3l - 2j - 4 = 0$$

- This equation is known as the Grubler's criterion for plane mechanisms with constrained motion.
- A little consideration will show that a plane mechanism with a movability of 1 and only single degree of freedom joints can not have odd number of links. The simplest possible machanisms
- of this type are a four bar mechanism and a slider-crank mechanism in which l = 4 and j = 4.

Atmiya University Rajkot

Inversion of Mechanism

- When one of links is fixed in a kinematic chain, it is called a mechanism.
- So we can obtain as many mechanisms as the number of links in a kinematic chain by fixing, in turn, different links in a kinematic chain.
- This method of obtaining different mechanisms by fixing different links in a kinematic chain, is known as inversion of the mechanism.
- It may be noted that the relative motions between the various links is not changed in any manner through the process of inversion, but their absolute motions (those measured with respect to the fixed link) may be changed drastically.

Atmiya University Rajkot

Types of Kinematic Chains

- The most important kinematic chains are those which consist of four lower pairs, each pair being a sliding pair or a turning pair.
- The following three types of kinematic chains with four lower pairs are important from the subject point of view :

1. **Four bar chain or quadric cyclic chain,**
2. **Single slider crank chain, and**
3. **Double slider crank chain.**

Atmiya University Rajkot

Four Bar Chain or Quadric Cycle Chain

- The kinematic chain is a combination of four or more kinematic pairs, such that the relative motion between the links or elements is completely constrained.
- The simplest and the basic kinematic chain is a four bar chain or quadric cycle chain, as shown in Fig.

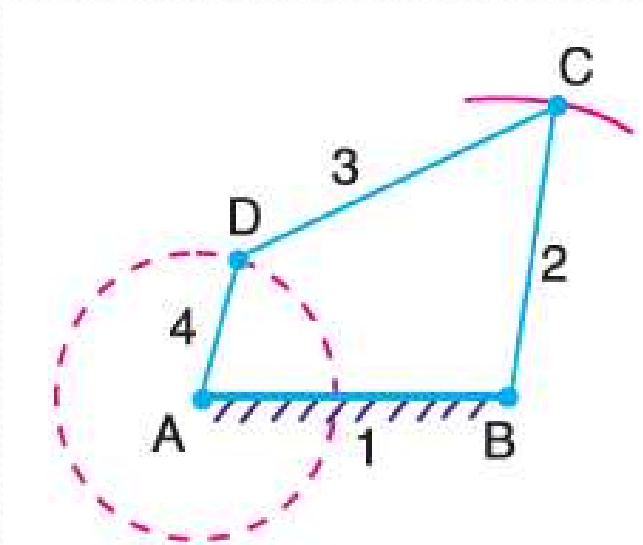

- It consists of four links, each of them forms a turning pair at A, B, C and D. The four links may be of different lengths.

Amiya University Rajkot

- According to **Grashof 's law for a four bar mechanism,** the sum of the shortest and longest link lengths should not be greater than the sum of the remaining two link lengths if there is to be continuous relative motion between the two links.
- A very important consideration in designing a mechanism is to ensure that the input crank makes a complete revolution relative to the other links.
- The mechanism in which no link makes a complete revolution will not be useful.
- In a four bar chain, one of the links, in particular the shortest link, will make a complete revolution relative to the other three links, if it satisfies the Grashof 's law.
- Such a link is known as **crank or driver**.
- In Fig. AD (link 4) is a **crank**. The link BC (link 2) which makes a partial rotation or oscillates is known as **lever or rocker or follower** and the link CD (link 3) which connects the crank and lever is called **connecting rod or coupler.**
- The fixed link AB (link 1) is known as **frame of the mechanism.**
- When the crank (link 4) is the driver, the mechanism is transforming rotary motion into oscillating motion.

Atmiya University Rajkot

Inversions of Four Bar Chain

- Though there are many inversions of the four bar chain, yet the following are important from the subject point of view :

1. Beam engine (Crank and lever mechanism)
2. Coupling rod of a locomotive (Double crank mechanism)
3. Watt's indicator mechanism (Double lever mechanism)

Atmiya University Rajkot

Beam engine
(crank and lever mechanism)

- A part of the mechanism of a beam engine (also known as crank and lever mechanism) which consists of four links, is shown in Fig.
- In this mechanism, when the crank rotates about the fixed centre A, the lever oscillates about a fixed centre D.
- The end E of the lever CDE is connected to a piston rod which reciprocates due to the rotation of the crank.
- In other words, the purpose of this mechanism is to convert rotary motion into reciprocating motion.

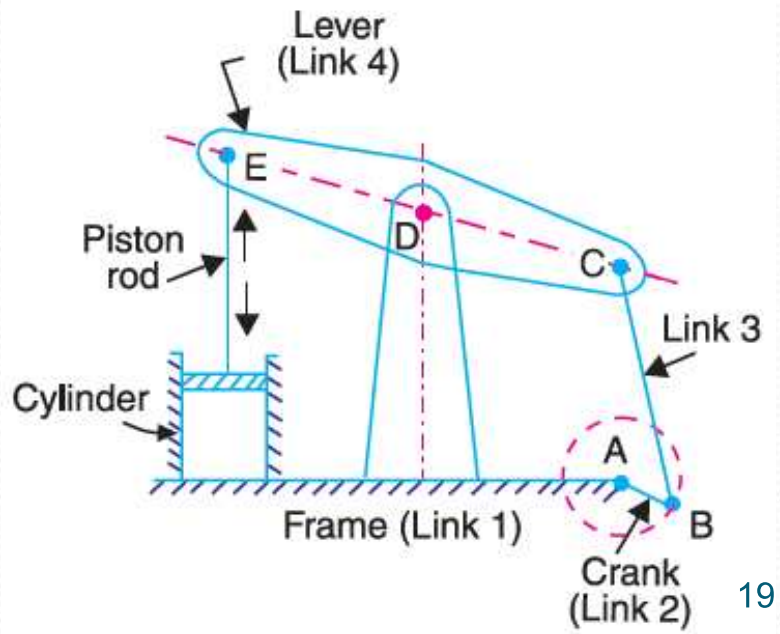

Atmiya University
Rajkot

Beam engine
(crank and lever mechanism)

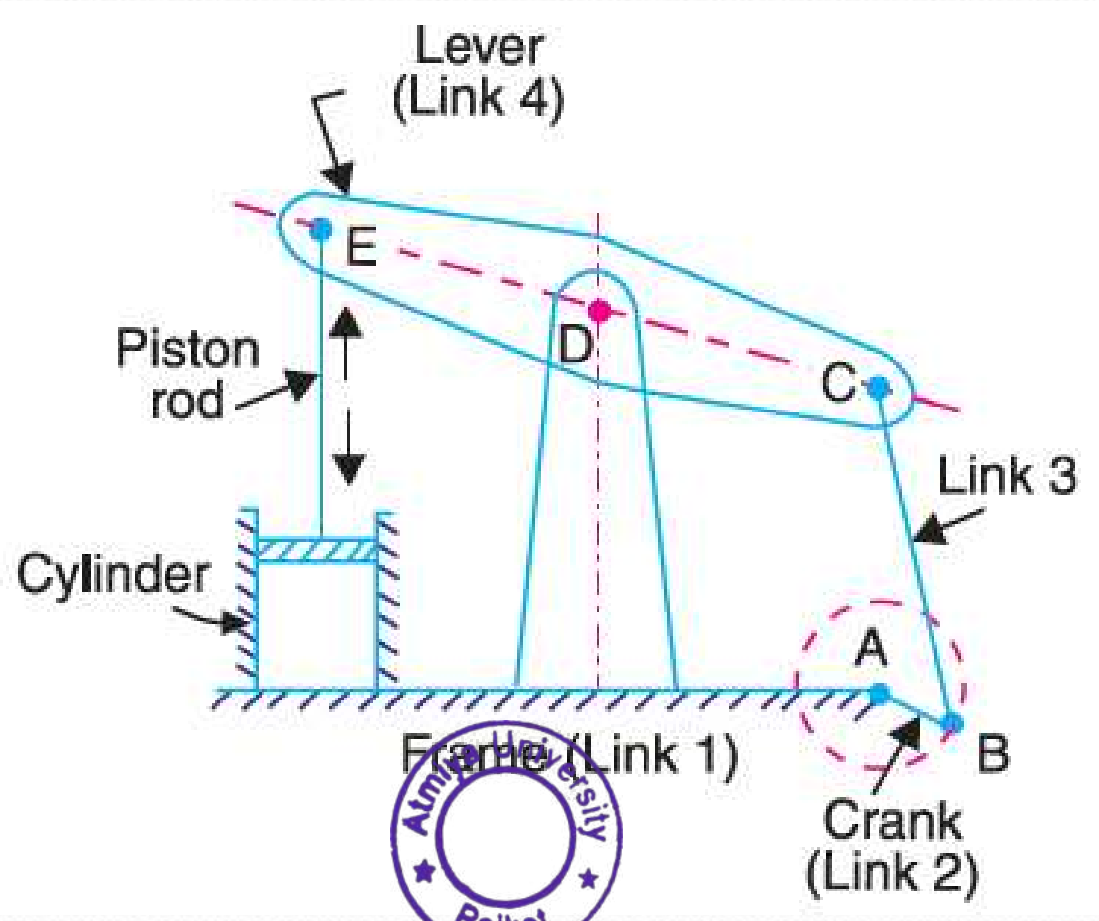

Atmiya University
Rajkot

Coupling rod of a locomotive (Double crank mechanism)

- The mechanism of a coupling rod of a locomotive (also known as double crank mechanism) which consists of four links, is shown in Fig.
- In this mechanism, the links AD and BC (having equal length) act as cranks and are connected to the respective wheels.
- The link CD acts as a coupling rod and the link AB is fixed in order to maintain a constant centre to centre distance between them.
- This mechanism is meant for transmitting rotary motion from one wheel to the other wheel.

Atmiya University Rajkot

Coupling rod of a locomotive (Double crank mechanism)

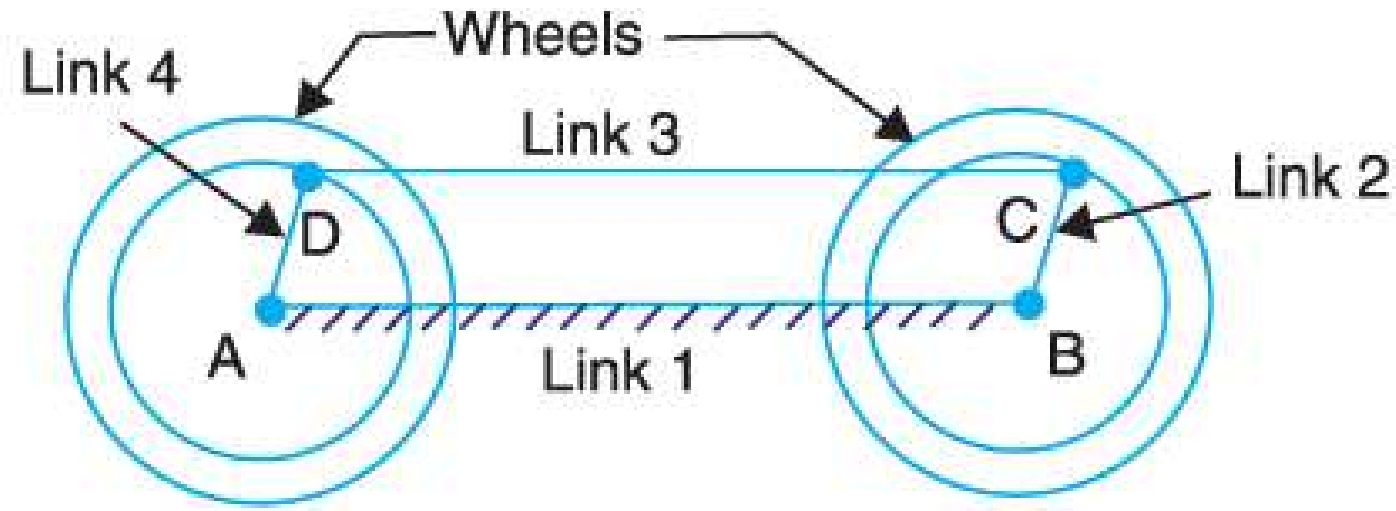

Atmiya University Rajkot

Watt's indicator mechanism (Double lever mechanism)

- A *Watt's indicator mechanism (also known as Watt's straight line mechanism or double lever mechanism) which consists of four links, is shown in Fig.
- The four links are : fixed link at A, link AC, link CE and link BFD.
- It may be noted that BF and FD form one link because these two parts have no relative motion between them.
- The links CE and BFD act as levers.
- The displacement of the link BFD is directly proportional to the pressure of gas or steam which acts on the indicator plunger.

Atmiya University Rajkot

Watt's indicator mechanism (Double lever mechanism)

- On any small displacement of the mechanism, the tracing point E at the end of the link CE traces out approximately a straight line.
- The initial position of the mechanism is shown in Fig. by full lines whereas the dotted lines show the position of the mechanism when the gas or steam pressure acts on the indicator plunger.

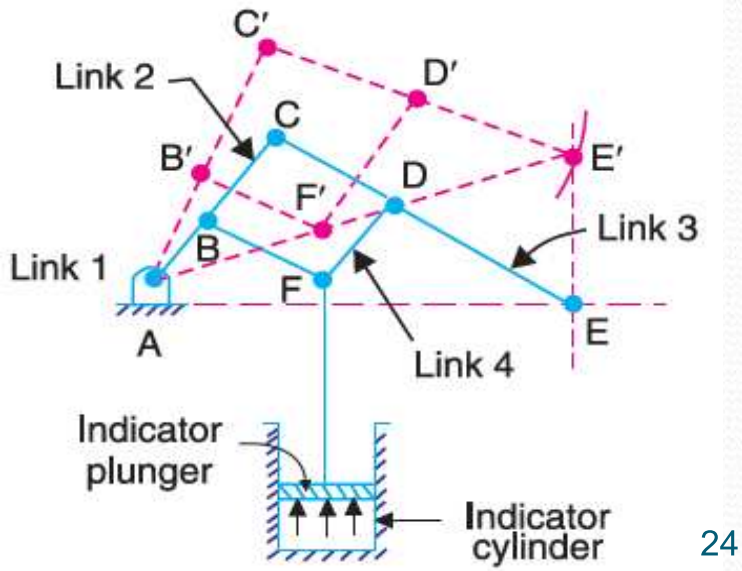

Atmiya University Rajkot

Watt's indicator mechanism (Double lever mechanism)

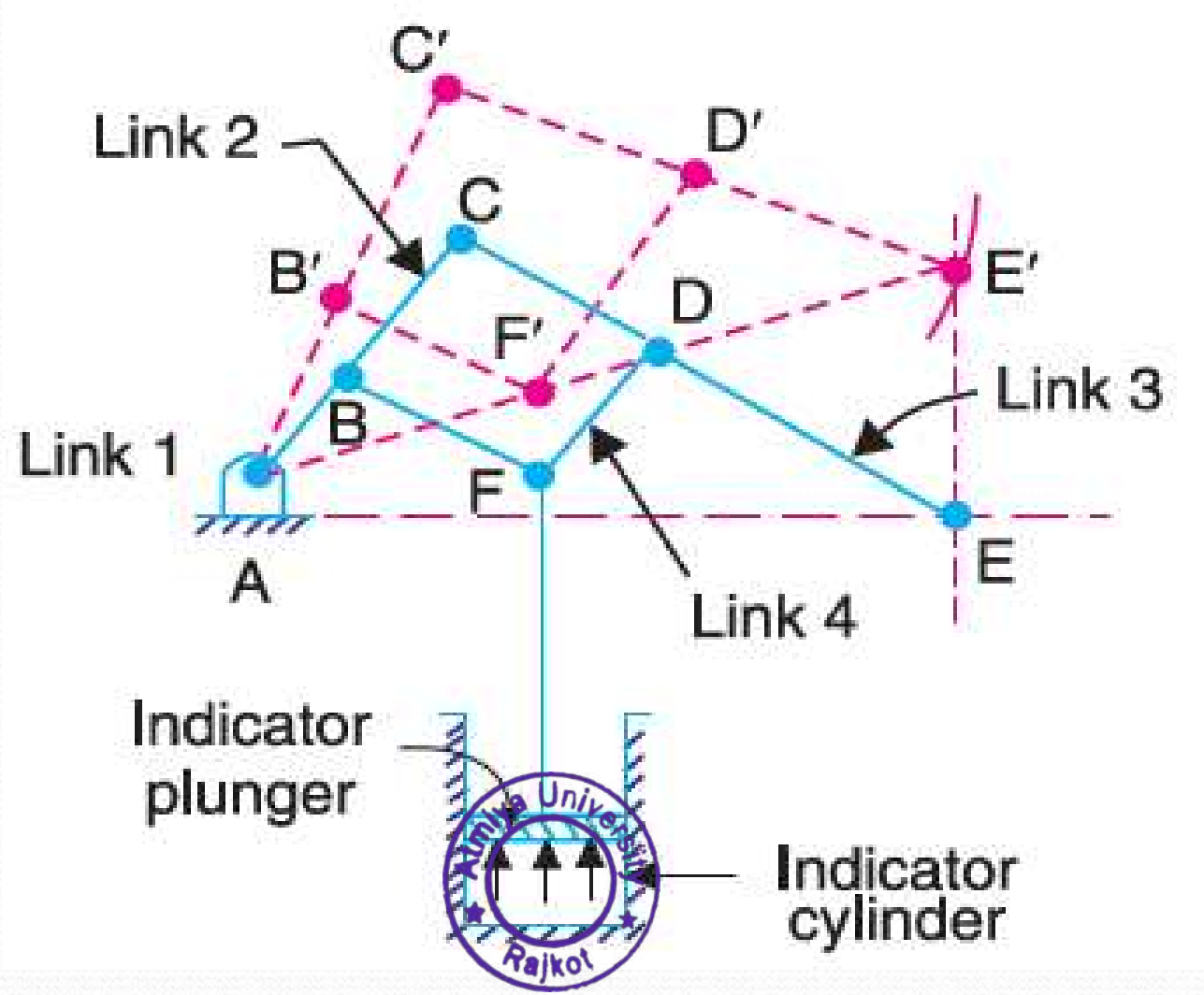

Single Slider Crank Chain

- A single slider crank chain is a modification of the basic four bar chain. It consist of one sliding pair and three turning pairs.
- It is usually found in reciprocating steam engine mechanism.
- This type of mechanism converts rotary motion into reciprocating motion and vice versa.
- In a single slider crank chain, as shown in Fig., the links 1 and 2, links 2 and 3, and links 3 and 4 form three turning pairs while the links 4 and 1 form a sliding pair.
- The link 1 corresponds to the frame of the engine, which is fixed.
- The link 2 corresponds to the crank ; link 3 corresponds to the connecting rod and link 4 corresponds to cross-head.
- As the crank rotates, the cross-head reciprocates in the guides and thus the piston reciprocates in the cylinder.

Rajkot

Single Slider Crank Chain

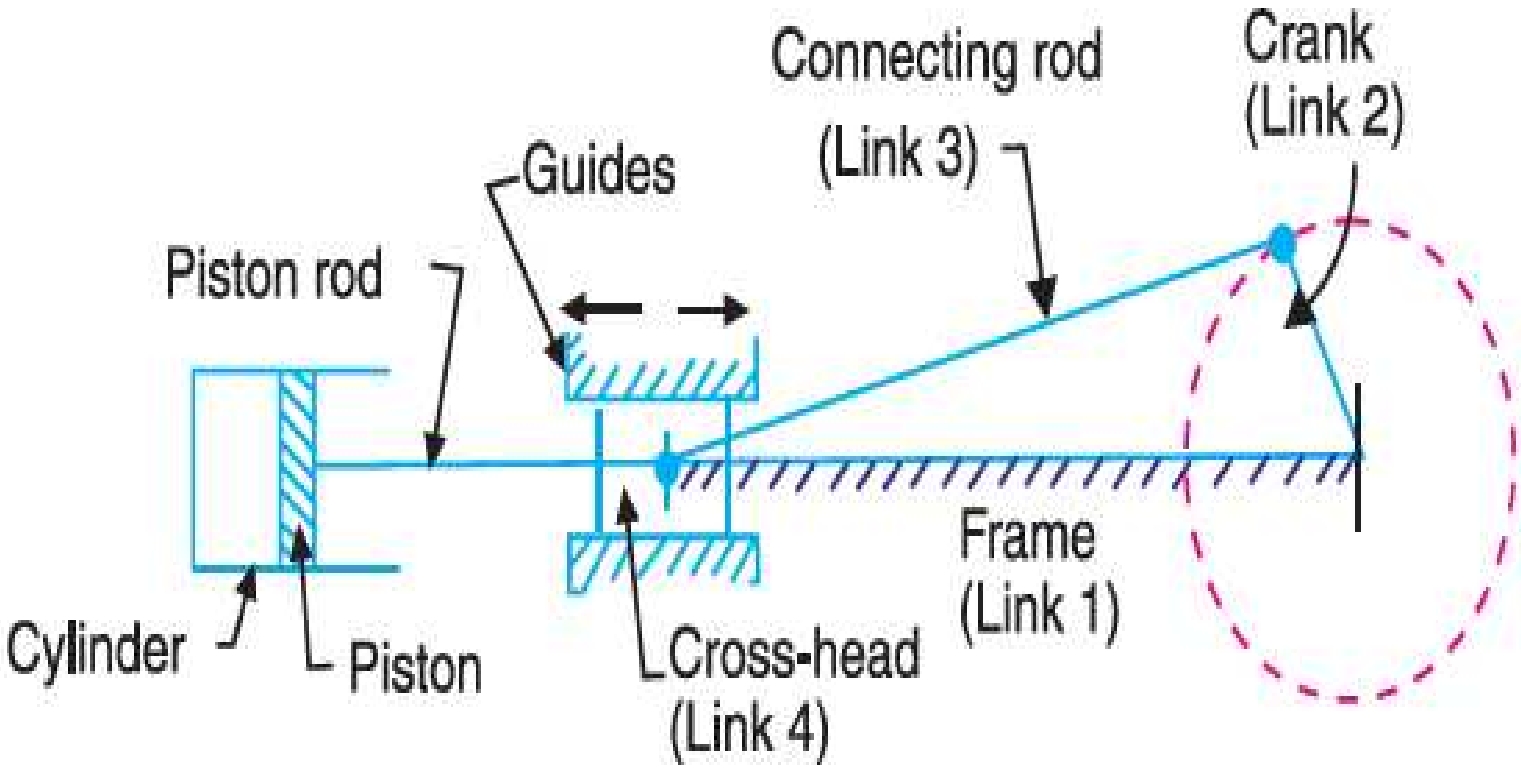

Atmiya University
Rajkot

Inversions of Single Slider Crank Chain

- We have seen that a single slider crank chain is a four-link mechanism.
- We know that by fixing, in turn, different links in a kinematic chain, an inversion is obtained and we can obtain as many mechanisms as the links in a kinematic chain.
- It is obvious that four inversions of a single slider crank chain are possible.
- These inversions are found in the following mechanisms.

1. ***Pendulum pump or Bull engine***
2. ***Oscillating cylinder engine***
3. ***Rotary internal combustion engine or Gnome engine***
4. ***Crank and slotted lever quick return motion mechanism***
5. ***Whitworth quick return motion mechanism.***

Atmiya University Rajkot

Pendulum pump or Bull engine

- In this mechanism, the inversion is obtained by fixing the cylinder or link 4 (i.e. sliding pair), as shown in Fig.
- In this case, when the crank (link 2) rotates, the connecting rod (link 3) oscillates about a pin pivoted to the fixed link 4 at A and the piston attached to the piston rod (link 1) reciprocates.
- The duplex pump which is used to supply feed water to boilers have two pistons attached to link 1, as shown in Fig.

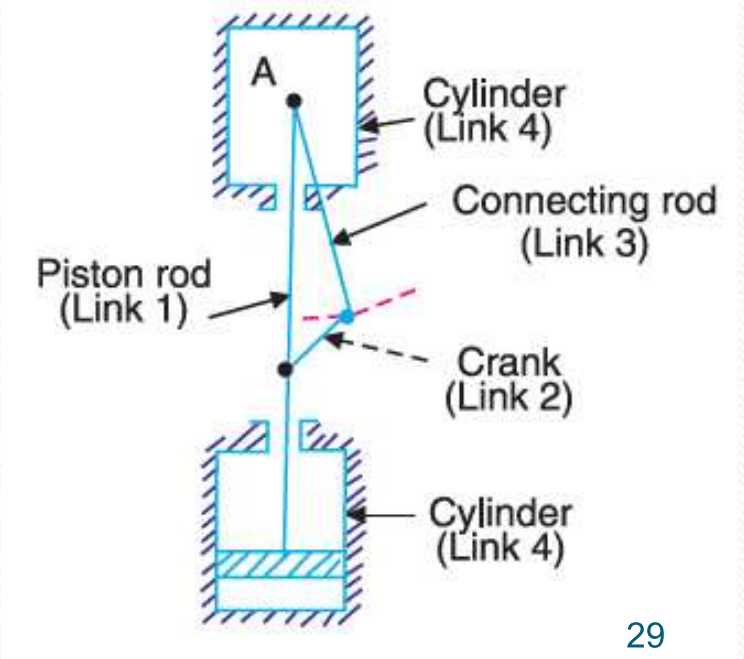

Atmiya University
Rajkot

Pendulum Pump

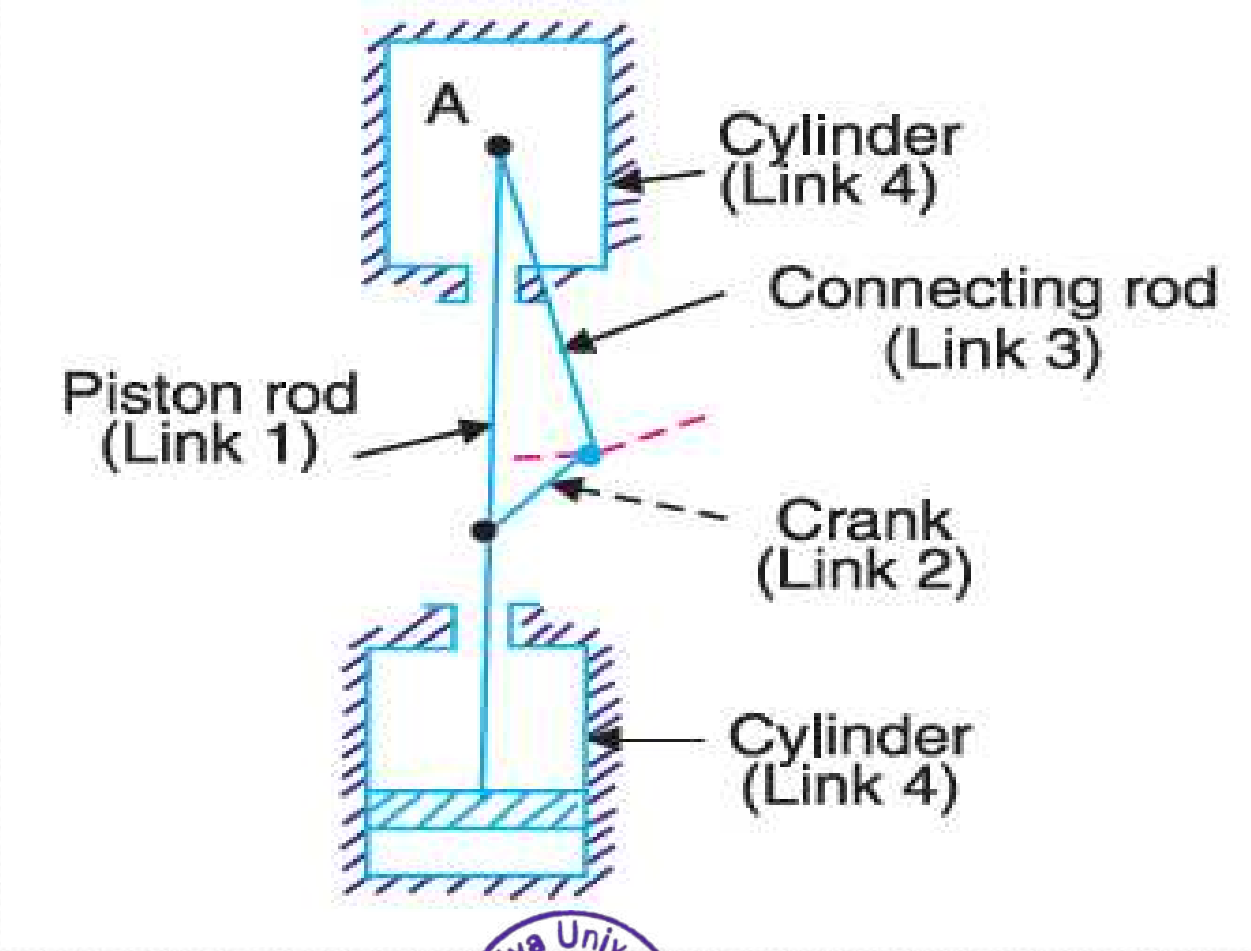

Atmiya University
Rajkot

Oscillating Cylinder Engine

- The arrangement of oscillating cylinder engine mechanism, as shown in Fig. is used to convert reciprocating motion into rotary motion.
- In this mechanism, the link 3 forming the turning pair is fixed.
- The link 3 corresponds to the connecting rod of a reciprocating steam engine mechanism.
- When the crank (link 2) rotates, the piston attached to piston rod (link 1) reciprocates and the cylinder (link 4) oscillates about a pin pivoted to the fixed link at A.

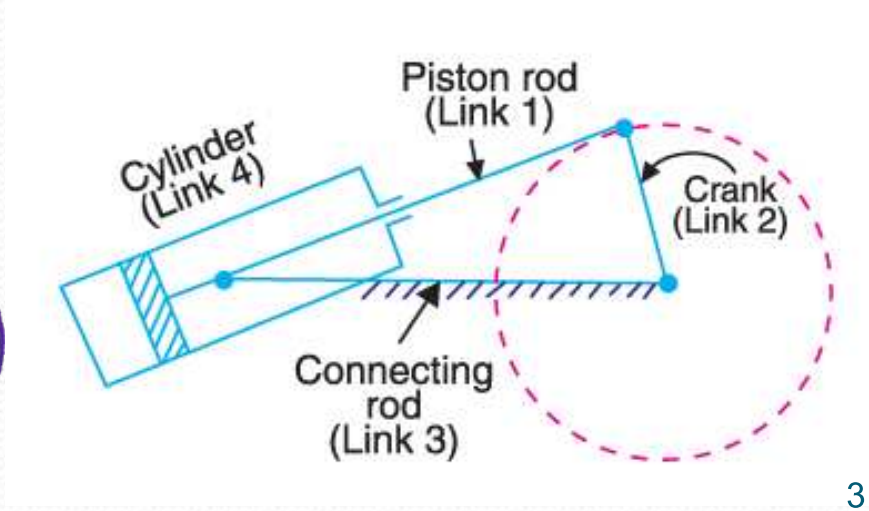

Atmiya University
Rajkot

Oscillating Cylinder Engine

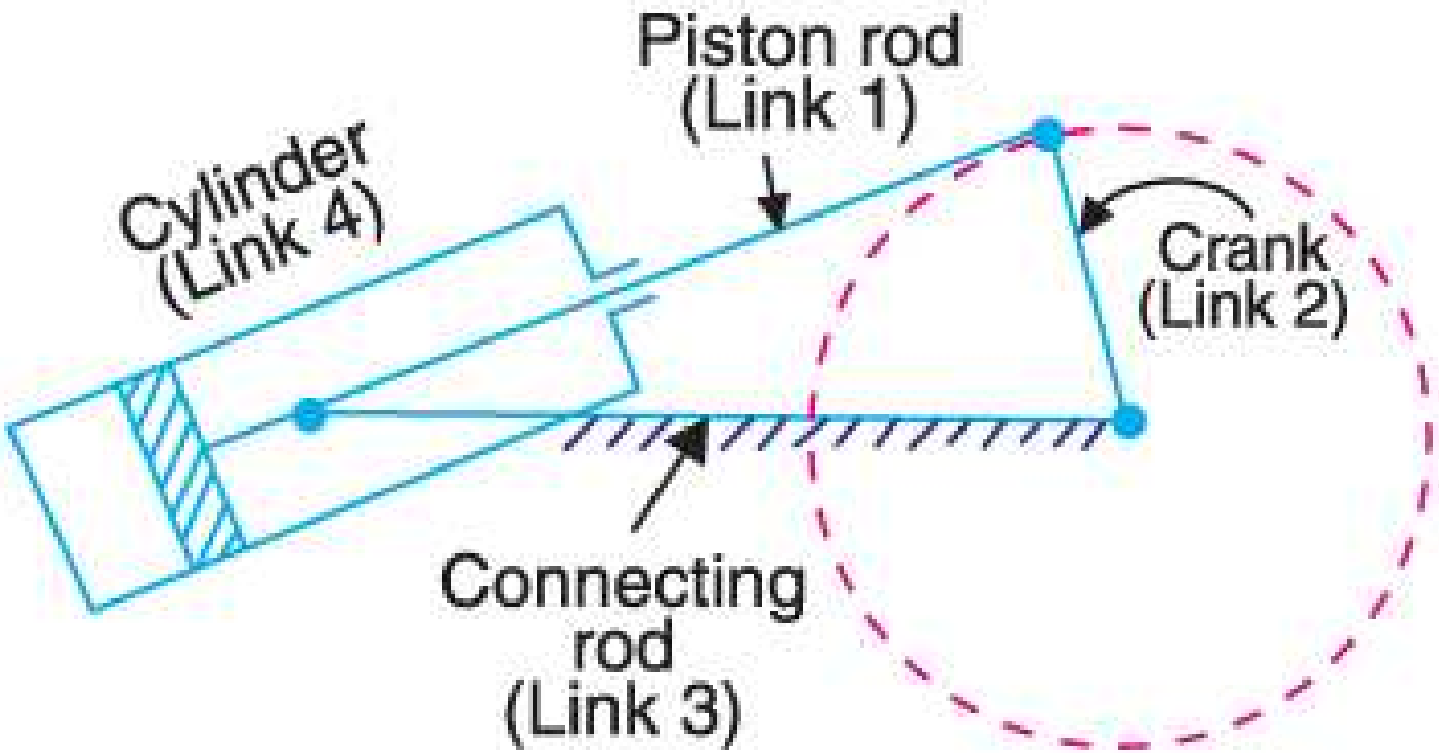

Atmiya University
Rajkot

Rotary internal combustion engine or Gnome engine

- Sometimes back, rotary internal combustion engines were used in aviation.
- But now-a-days gas turbines are used in its place
- It consists of seven cylinders in one plane and all revolves about fixed centre D, as shown in Fig. while the crank (link 2) is fixed.
- In this mechanism, when the connecting rod (link 4) rotates, the piston (link 3) reciprocates inside the cylinders forming link 1.

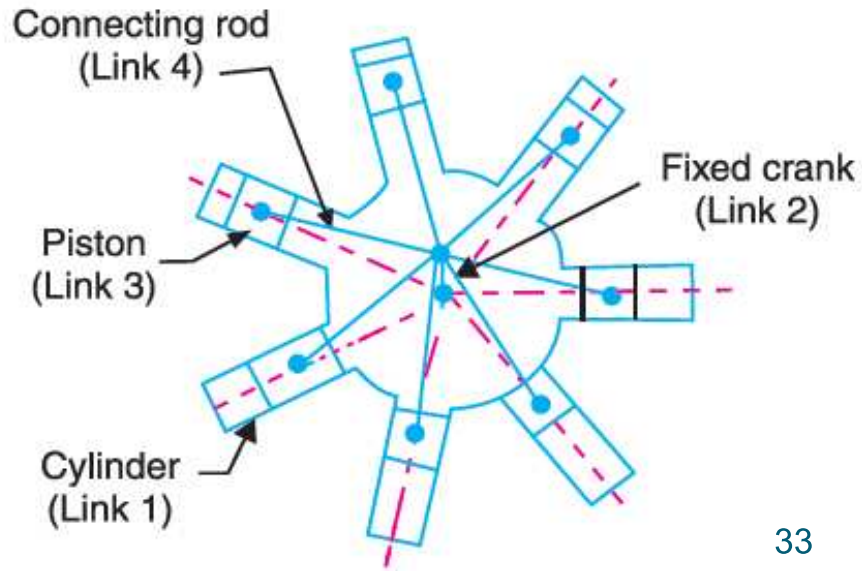

Atmiya University
Rajkot

Rotary internal combustion engine

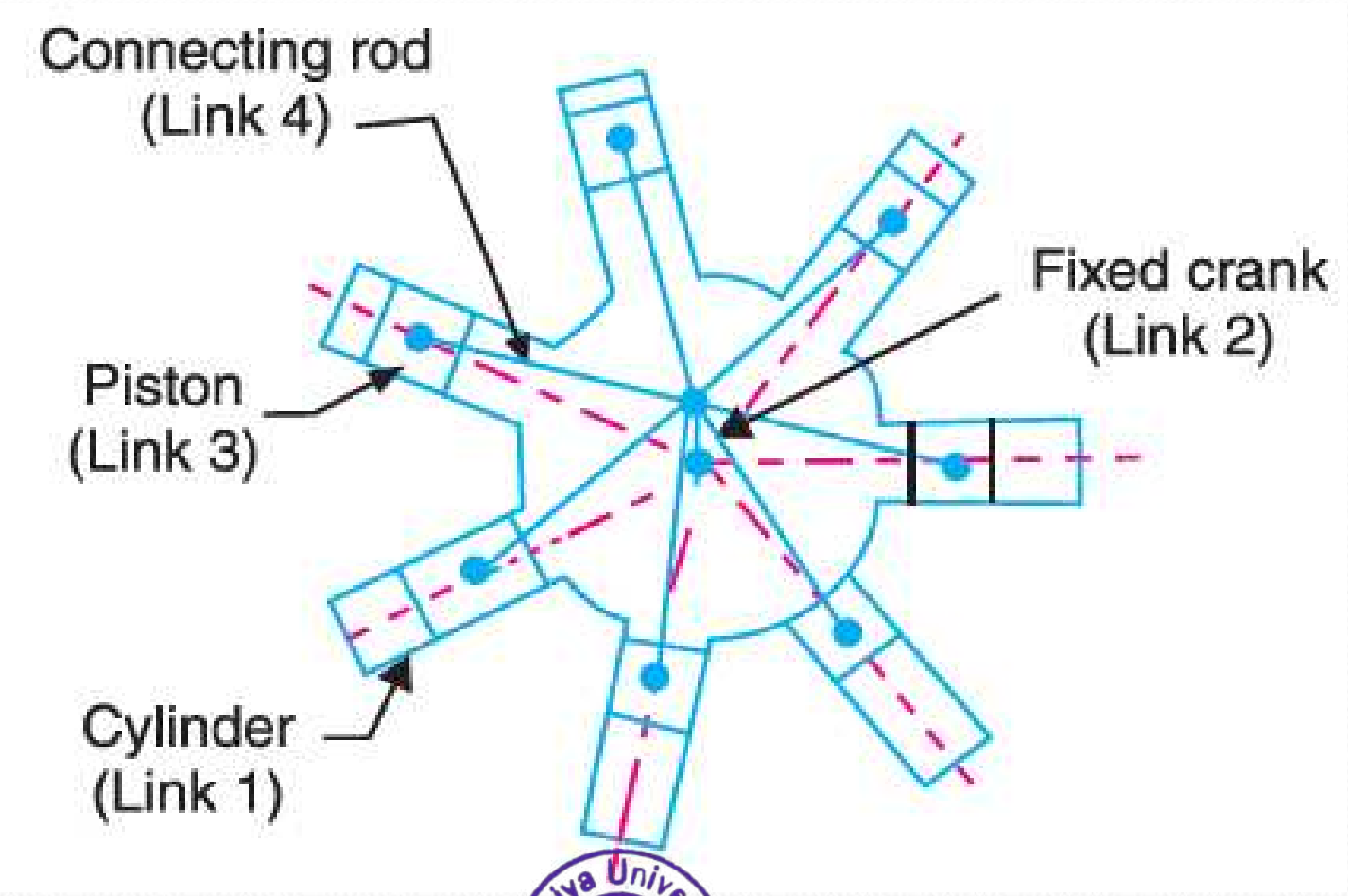

Atmiya University
Rajkot

Crank and slotted lever quick return motion mechanism

- This mechanism is mostly used in shaping machines, slotting machines and in rotary internal combustion engines.
- In this mechanism, the link AC (i.e. link 3) forming the turning pair is fixed, as shown in Fig.
- The link 3 corresponds to the connecting rod of a reciprocating steam engine.
- The driving crank CB revolves with uniform angular speed about the fixed centre C.
- A sliding block attached to the crank pin at B slides along the slotted bar AP and thus causes AP to oscillate about the pivoted point A.
- A short link PR transmits the motion from AP to the ram which carries the tool and reciprocates along the line of stroke R_1R_2.
- The line of stroke of the ram (i.e. R_1R_2) is perpendicular to AC produced.

Atmiya University Rajkot

Crank and slotted lever quick return motion mechanism

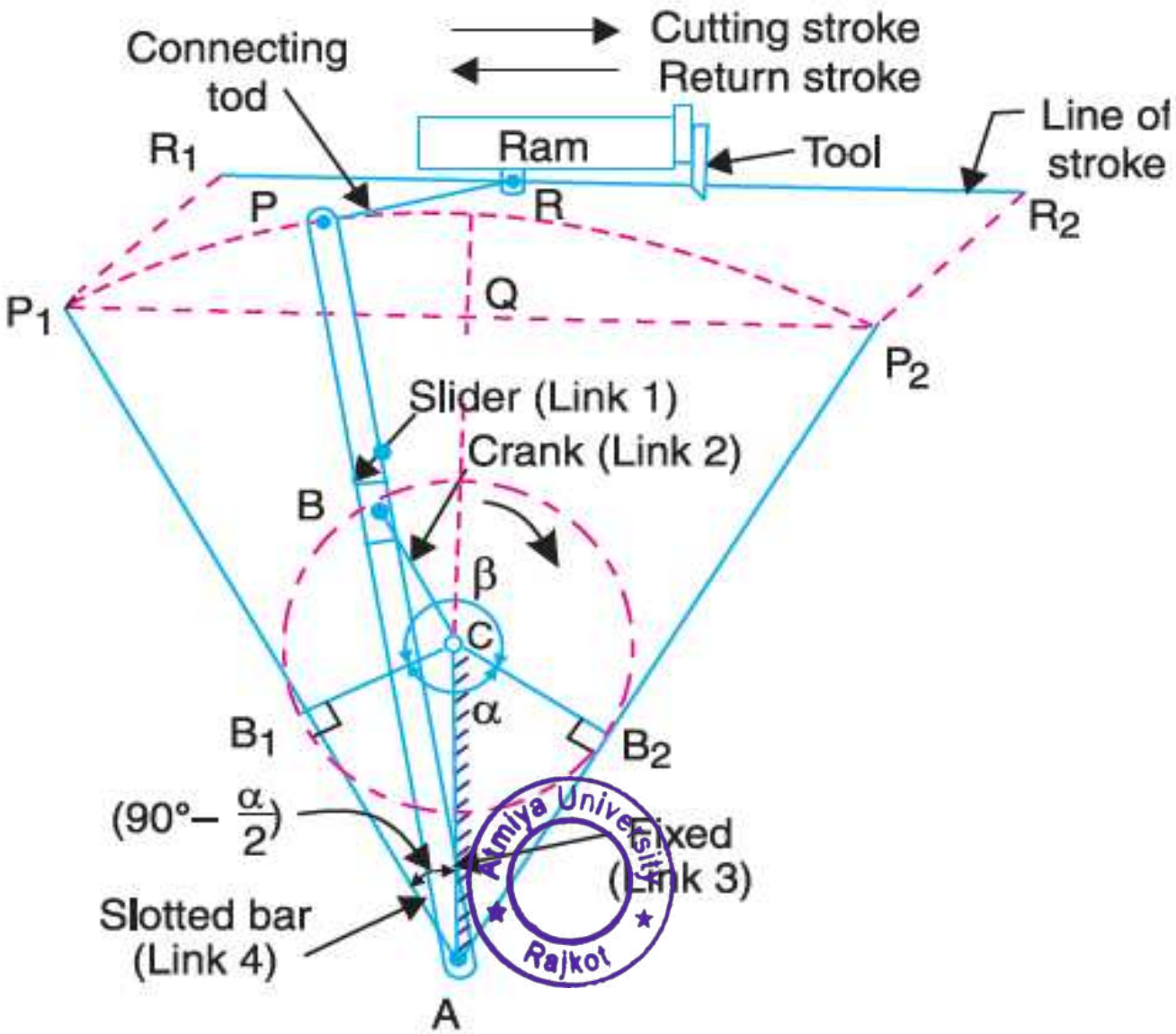

Whitworth quick return motion mechanism

- This mechanism is mostly used in shaping and slotting machines.
- In this mechanism, the link CD (link 2) forming the turning pair is fixed, as shown in Fig.
- The link 2 corresponds to a crank in a reciprocating steam engine.
- The driving crank CA (link 3) rotates at a uniform angular speed. The slider (link 4) attached to the crank pin at A slides along the slotted bar PA (link 1) which oscillates at a pivoted point D.
- The connecting rod PR carries the ram at R to which a cutting tool is fixed.
- The motion of the tool is constrained along the line RD produced, i.e. along a line passing through D and perpendicular to CD.

Atmiya University Rajkot

Whitworth quick return motion mechanism

- When the driving crank CA moves from the position CA_1 to CA_2 (or the link DP from the position DP_1 to DP_2) through an angle α in the clockwise direction, the tool moves from the left hand end of its stroke to the right hand end through a distance 2 PD.
- Now when the driving crank moves from the position CA_2 to CA_1 (or the link DP from DP_2 to DP_1) through an angle β in the clockwise direction, the tool moves back from right hand end of its stroke to the left hand end.
- A little consideration will show that the time taken during the left to right movement of the ram (i.e. during forward or cutting stroke) will be equal to the time taken by the driving crank to move from CA_1 to CA_2.
- Similarly, the time taken during the right to left movement of the ram (or during the idle or return stroke) will be equal to the time taken by the driving crank to move from CA_2 to CA_1.

Atmiya University Rajkot

Whitworth quick return motion mechanism

- Since the crank link CA rotates at uniform angular velocity therefore time taken during the cutting stroke (or forward stroke) is more than the time taken during the return stroke.
- In other words, the mean speed of the ram during cutting stroke is less than the mean speed during the return stroke.

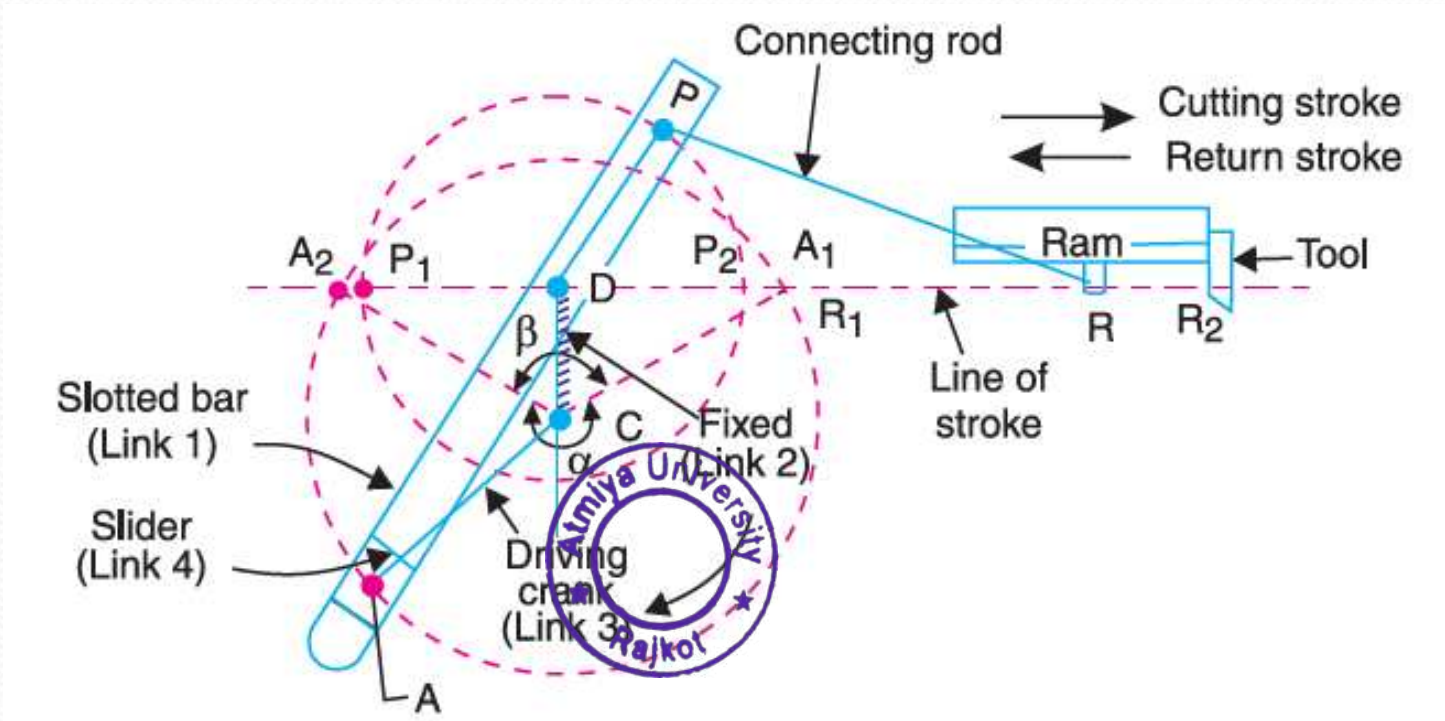

Whitworth quick return motion mechanism

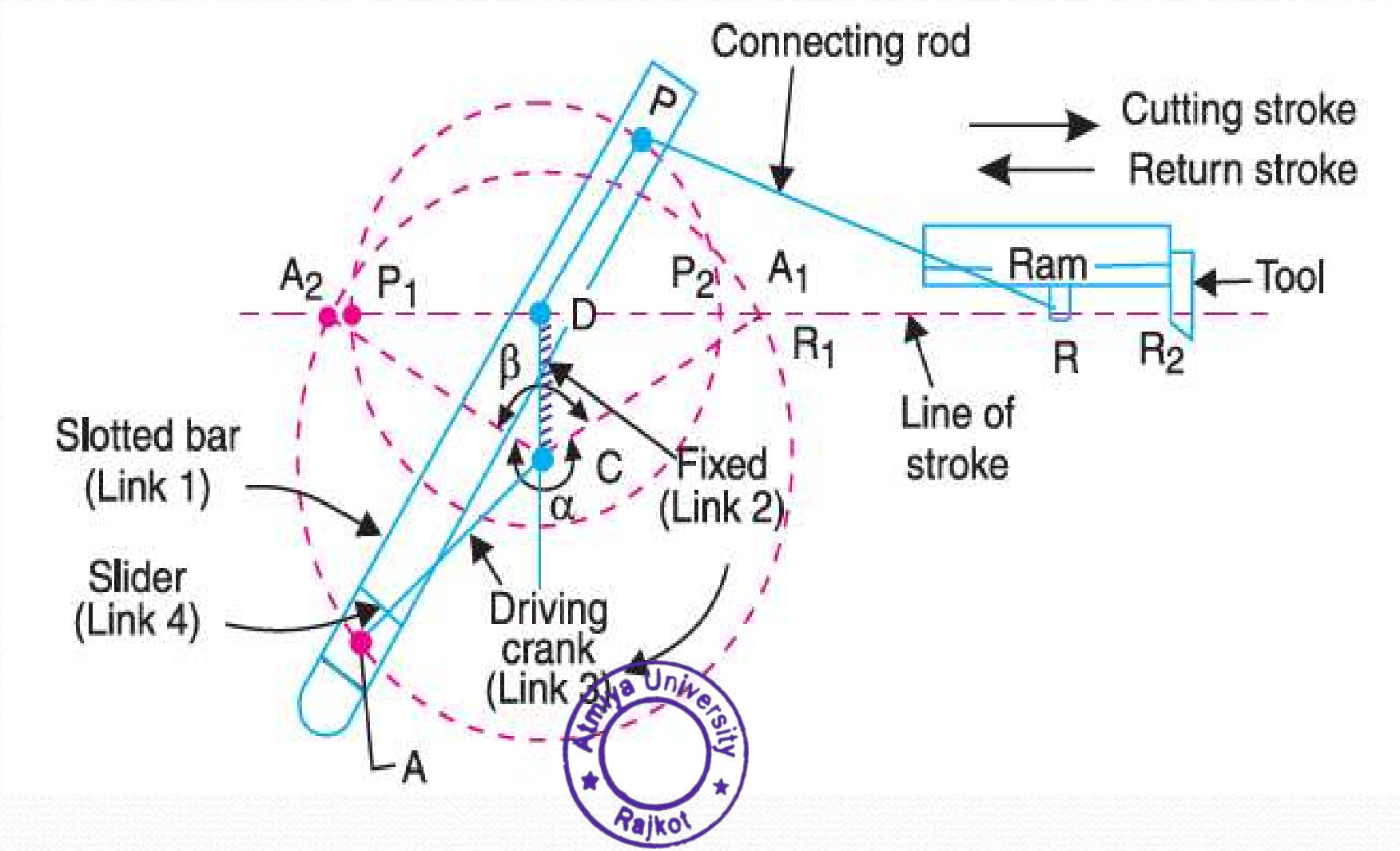

Double Slider Crank Chain

- A kinematic chain which consists of two turning pairs and two sliding pairs is known as double slider crank chain.

Inversions of Double Slider Crank Chain

- The following three inversions of a double slider crank chain are important from the subject point of view :

1. ***Elliptical trammels***
2. ***Scotch yoke mechanism***
3. ***Oldham's coupling***

Atmiya University Rajkot

Elliptical trammels

- It is an instrument used for drawing ellipses.
- This inversion is obtained by fixing the slotted plate (link 4), as shown in Fig.
- The fixed plate or link 4 has two straight grooves cut in it, at right angles to each other.
- The link 1 and link 3, are known as sliders and form sliding pairs with link 4.
- The link AB (link 2) is a bar which forms turning pair with links 1 and 3.
- When the links 1 and 3 slide along their respective grooves, any point on the link 2 such as P traces out an ellipse on the surface of link 4, as shown in Fig.

Atmiya University Rajkot

Elliptical trammels

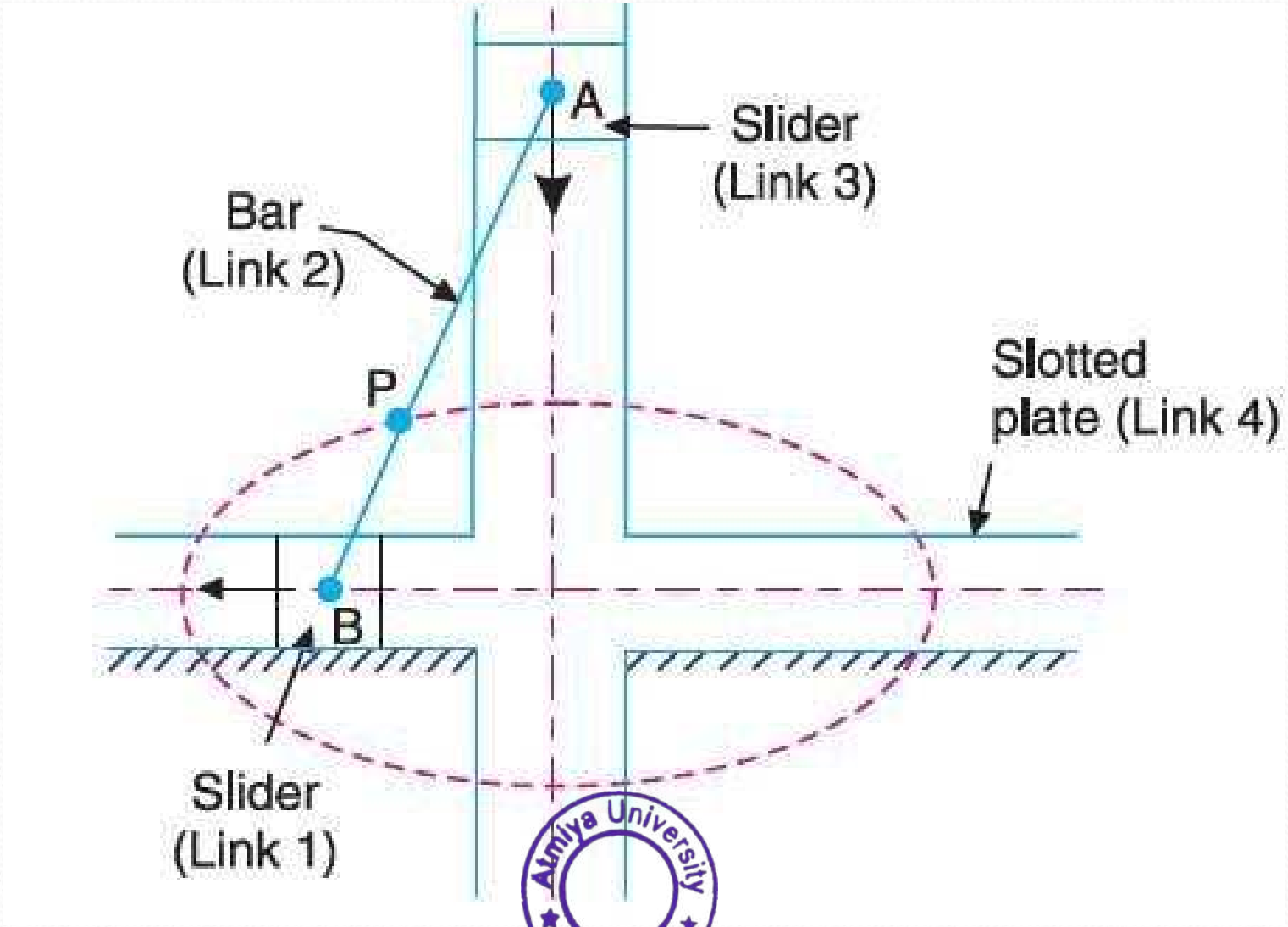

Atmiya University
Rajkot

Scotch yoke mechanism

- This mechanism is used for converting rotary motion into a reciprocating motion.
- The inversion is obtained by fixing either the link 1 or link 3.
- In Fig. link 1 is fixed.
- The link 1 and link 3, are known as sliders and form sliding pairs with link 4.
- In this mechanism, when the link 2 (which corresponds to crank) rotates about B as centre, the link 4 (which corresponds to a frame) reciprocates.
- The fixed link 1 guides the frame.

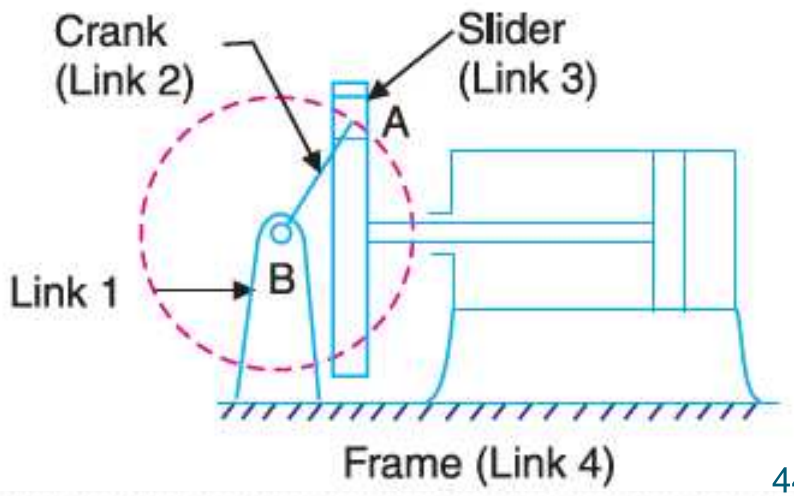

Atmiya University
Rajkot

Scotch yoke mechanism

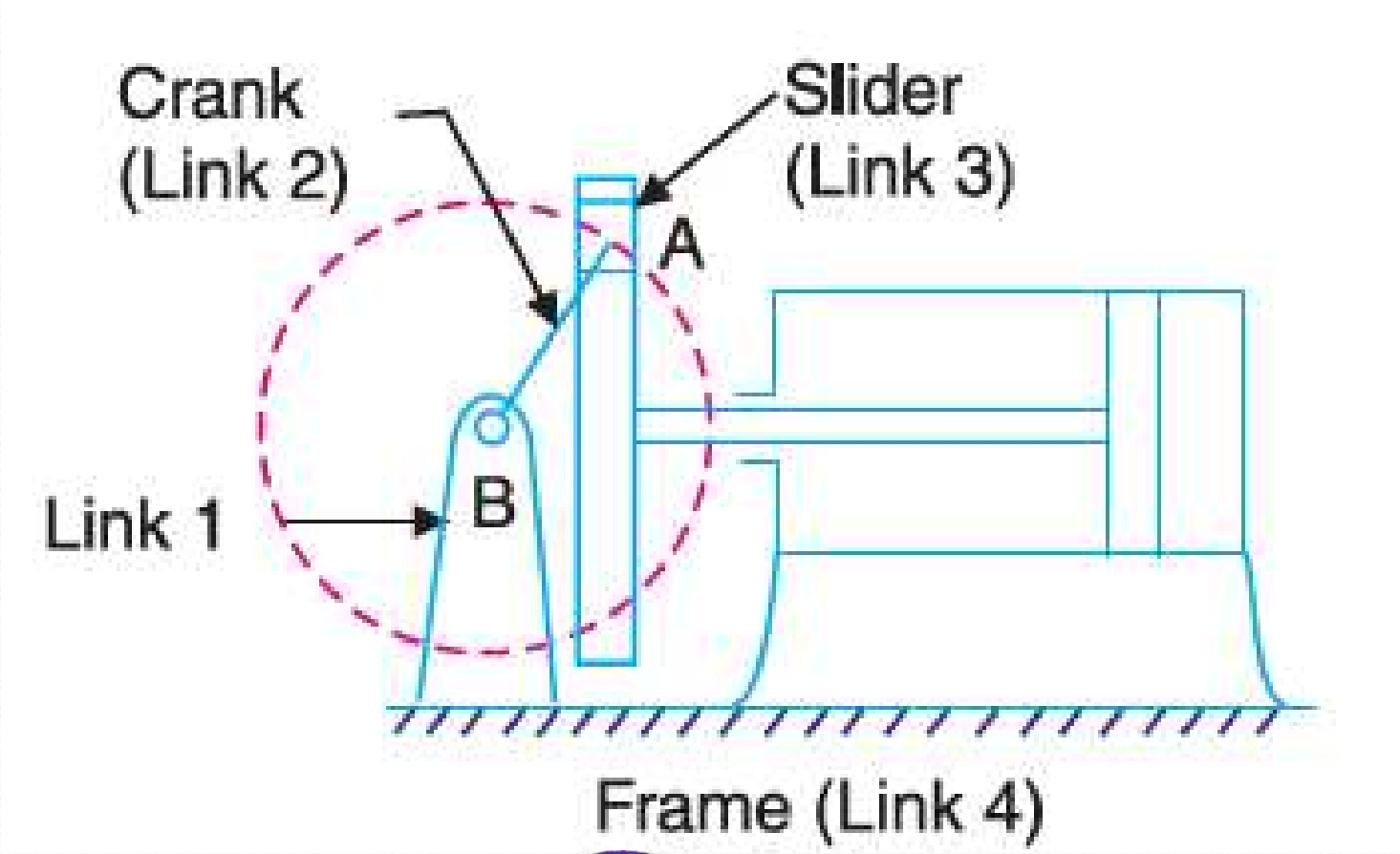

Atmiya University
Rajkot

Oldham's coupling

- An oldham's coupling is used for connecting two parallel shafts whose axes are at a small distance apart.
- The shafts are coupled in such a way that if one shaft rotates, the other shaft also rotates at the same speed.
- This inversion is obtained by fixing the link 2, as shown in Fig. (a)
- The link 1 and link 3, are known as sliders and form sliding pairs with link 4.
- The shafts to be connected have two flanges (link 1 and link 3) rigidly fastened at their ends by forging.
- The link 1 and link 3 form turning pairs with link 2.
- These flanges have diametrical slots cut in their inner faces, as shown in Fig. (b)

Atmiya University Rajkot

Oldham's coupling

- The intermediate piece (link 4) which is a circular disc, have two tongues (i.e. diametrical projections) $T_1$and T_2 on each face at right angles to each other, as shown in Fig. (c).
- The tongues on the link 4 closely fit into the slots in the two flanges (link 1 and link 3).
- This inversion is obtained by fixing the link 2, as shown in Fig. (a)
- The link 1 and link 3, are known as sliders and form sliding pairs with link 4.
- The link 4 can slide or reciprocate in the slots in the flanges.
- When the driving shaft A is rotated, the flange C (link 1) causes the intermediate piece (link 4) to rotate at the same angle through which the flange has rotated, and it further rotates the flange D (link 3) at the same angle and thus the shaft B rotates.

Atmiya University Rajkot

Oldham's coupling

- Hence links 1, 3 and 4 have the same angular velocity at every instant.
- A little consideration will show, that there is a sliding motion between the link 4 and each of the other links 1 and 3.

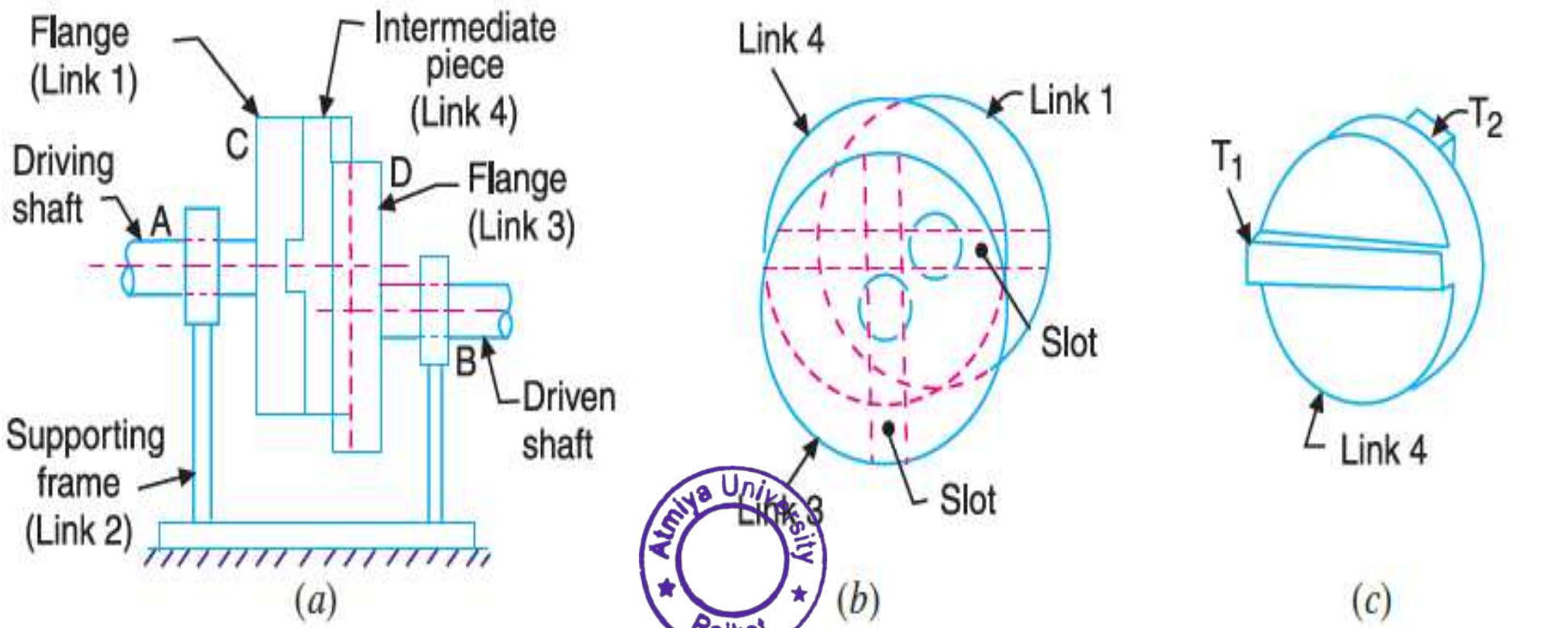

Atmiya University Rajkot

Oldham's coupling

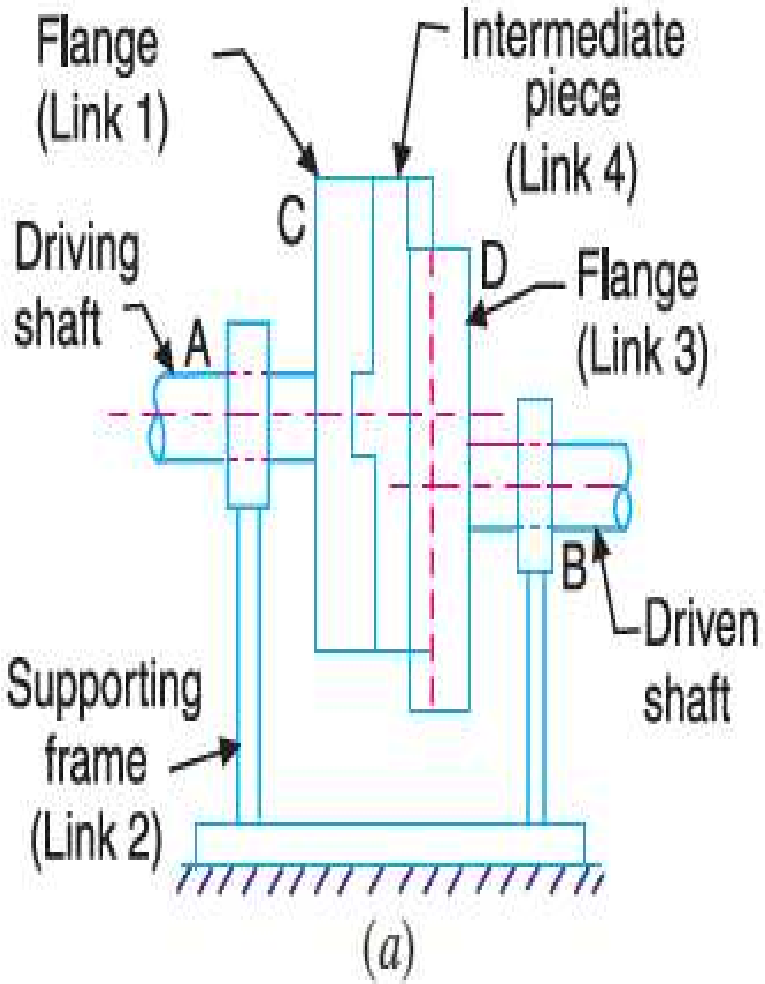

(a)

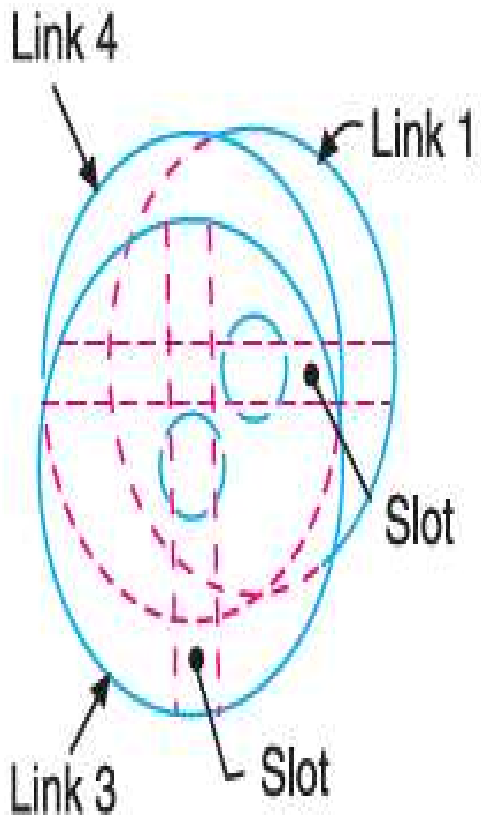

(b)

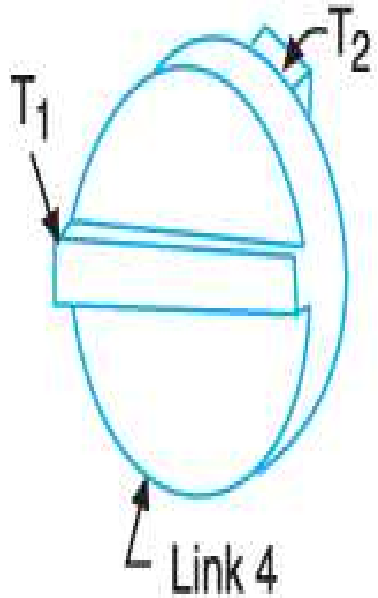

(c)

Atmiya University Rajkot

Atmiya University, Rajkot
Faculty of Engineering & Technology

Department of Mechanical Engineering

Prepared by: Shivang S. Jani

Course: Theory of Machines(21BTMECC303)
Unit III: CAM Profile

CAM PROFILE

KINEMATICS OF MACHINE

Atmiya University
Rajkot

INTRODUCTION:

- A *cam* is a rotating machine element which gives reciprocating or oscillating motion to another element known as *follower*.

- The cams are usually rotated at uniform speed by a shaft, but the follower motion is predetermined and will be according to the shape of the cam.

Atmiya University Rajkot

APPLICATION OF CAM:

- The cams are widely used for

  - operating the inlet and exhaust valves of internal combustion engines
  - automatic attachment of machineries
  - paper cutting machines
  - spinning and weaving textile machineries
  - feed mechanism of automatic lathes etc.

Atmiya University Rajkot

CLASSIFICATION OF FOLLOWERS:

- The followers may be classified as discussed below :

(1) According to the surface in contact.

(a) Knife edge follower.

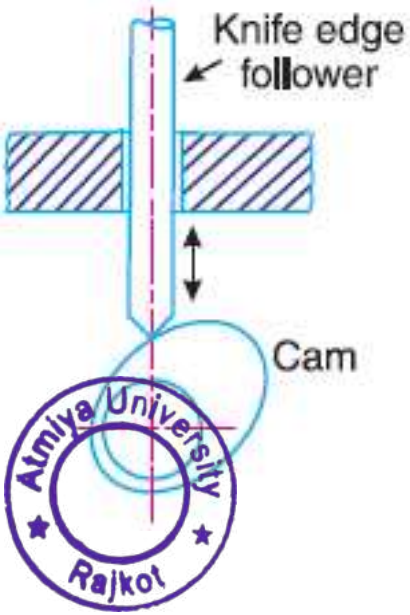

Atmiya University
Rajkot

(b) Roller follower.

Used where more space is available such as in stationary gas and oil engines and aircraft engines.

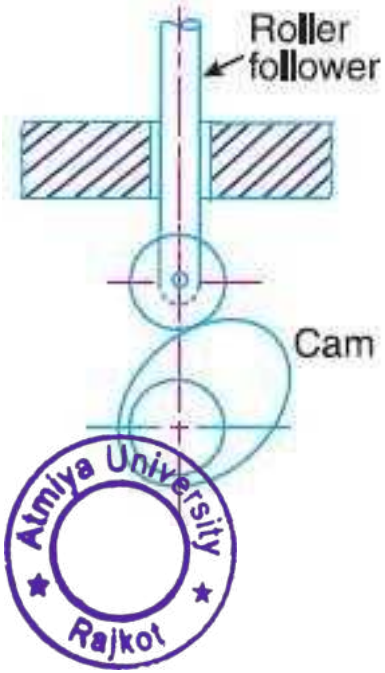

Atmiya University
Rajkot

(c) Flat faced or mushroom follower.

Used where space is limited such as in cams which operate the valves of automobile engines.

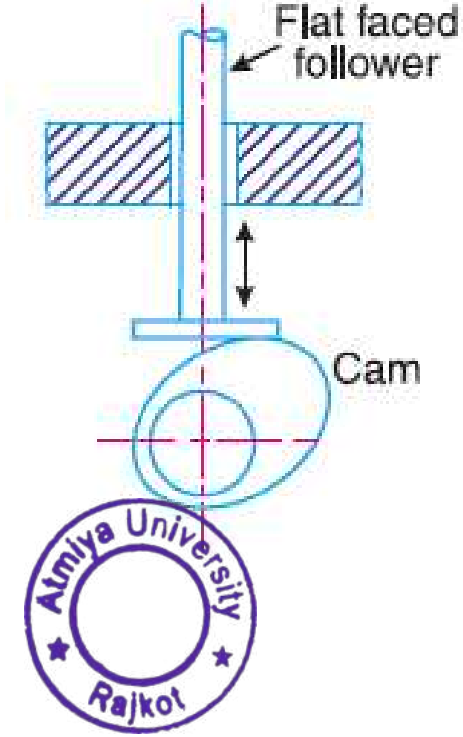

Atmiya University
Rajkot

(d) Spherical faced follower.

Used in automobile engines

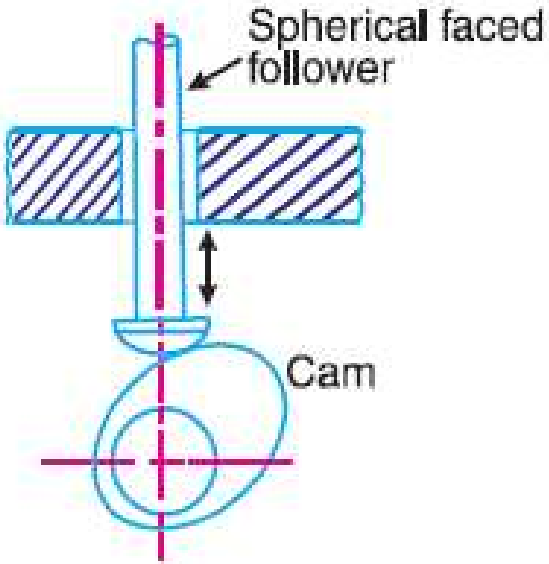

Atmiya University Rajkot

2. According to the motion of the follower.

(a) Reciprocating or translating follower.

- When the follower reciprocates in guides as the cam rotates uniformly, it is known as reciprocating or translating follower. The followers as shown in above Fig. (*a) to (d) are all reciprocating or translating followers.*

Atmiya University Rajkot

(*b) Oscillating or rotating follower.*

When the uniform rotary motion of the cam is converted into predetermined oscillatory motion of the follower, it is called oscillating or rotating follower

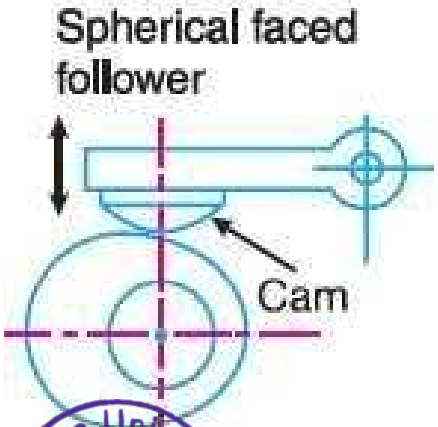

Atmiya University Rajkot

(3) According to the path of motion of the follower.

(*a) Radial follower.*

When the motion of the follower is along an axis passing through the centre of the cam, it is known as radial follower. The followers, as shown in above all Figures, are all radial followers.

Atmiya University Rajkot

(*b) Off-set follower.*

When the motion of the follower is along an axis away from the axis of the cam centre, it is called off-set follower.

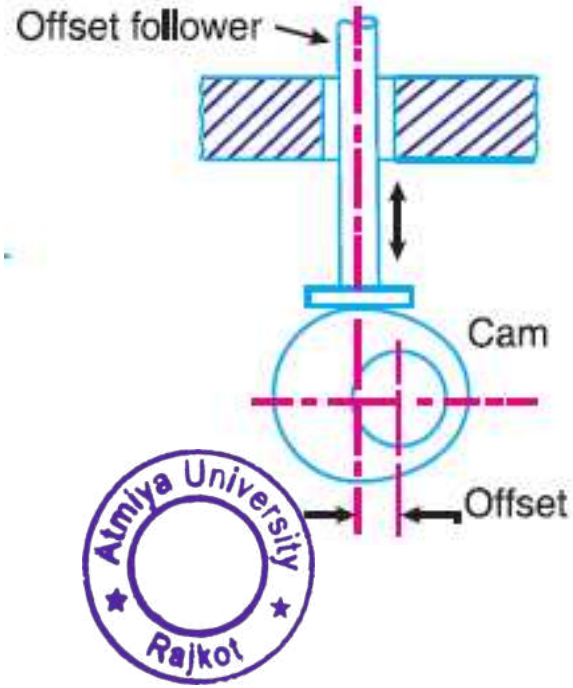

Atmiya University Rajkot

CLASSIFICATION OF CAMS:

1. ***Radial or disc cam.***

In radial cams, the follower reciprocates or oscillates in a direction perpendicular to the cam axis.

Atmiya University Rajkot

2. Cylindrical cam.

In cylindrical cams, the follower reciprocates or oscillates in a direction parallel to the cam axis.

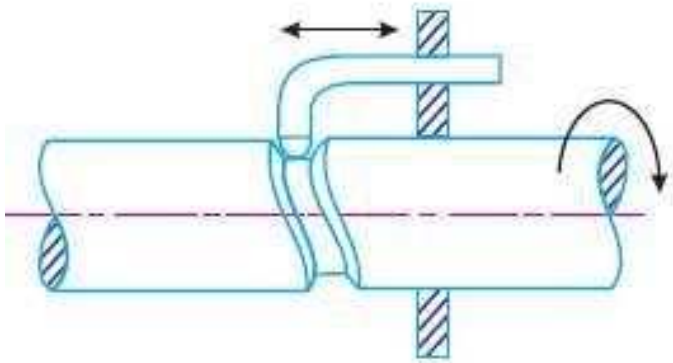

(*a*) Cylindrical cam with reciprocating follower.

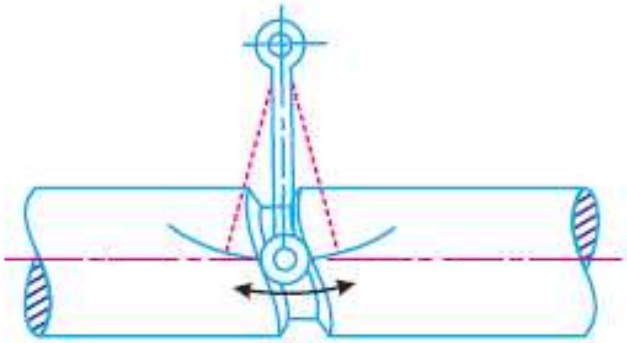

(*b*) Cylindrical cam with oscillating follower.

Atmiya University Rajkot

TERMS USED IN RADIAL CAMS:

1. ***Base circle.*** It is the smallest circle that can be drawn to the cam profile.

2. ***Trace point.*** It is a reference point on the follower and is used to generate the pitch curve. In case of knife edge follower, the knife edge represents the trace point and the pitch curve corresponds to the cam profile. In a roller follower, the centre of the roller represents the trace point.

Atmiya University Rajkot

3. ***Pressure angle.*** It is the angle between the direction of the follower motion and a normal to the pitch curve. This angle is very important in designing a cam profile. If the pressure angle is too large, a reciprocating follower will jam in its bearings.

4. ***Pitch point.*** It is a point on the pitch curve having the maximum pressure angle.

Atmiya University Rajkot

5. ***Pitch circle.*** It is a circle drawn from the centre of the cam through the pitch points.

6. ***Pitch curve.*** It is the curve generated by the trace point as the follower moves relative to the cam. For a knife edge follower, the pitch curve and the cam profile are same whereas for a roller follower, they are separated by the radius of the roller.

Atmiya University
Rajkot

7. ***Prime circle.*** It is the smallest circle that can be drawn from the centre of the cam and tangent to the pitch curve. For a knife edge and a flat face follower, the prime circle and the base circle are identical. For a roller follower, the prime circle is larger than the base circle by the radius of the roller.

8. ***Lift or stroke.*** It is the maximum travel of the follower from its lowest position to the topmost position.

Atmiya University Rajkot

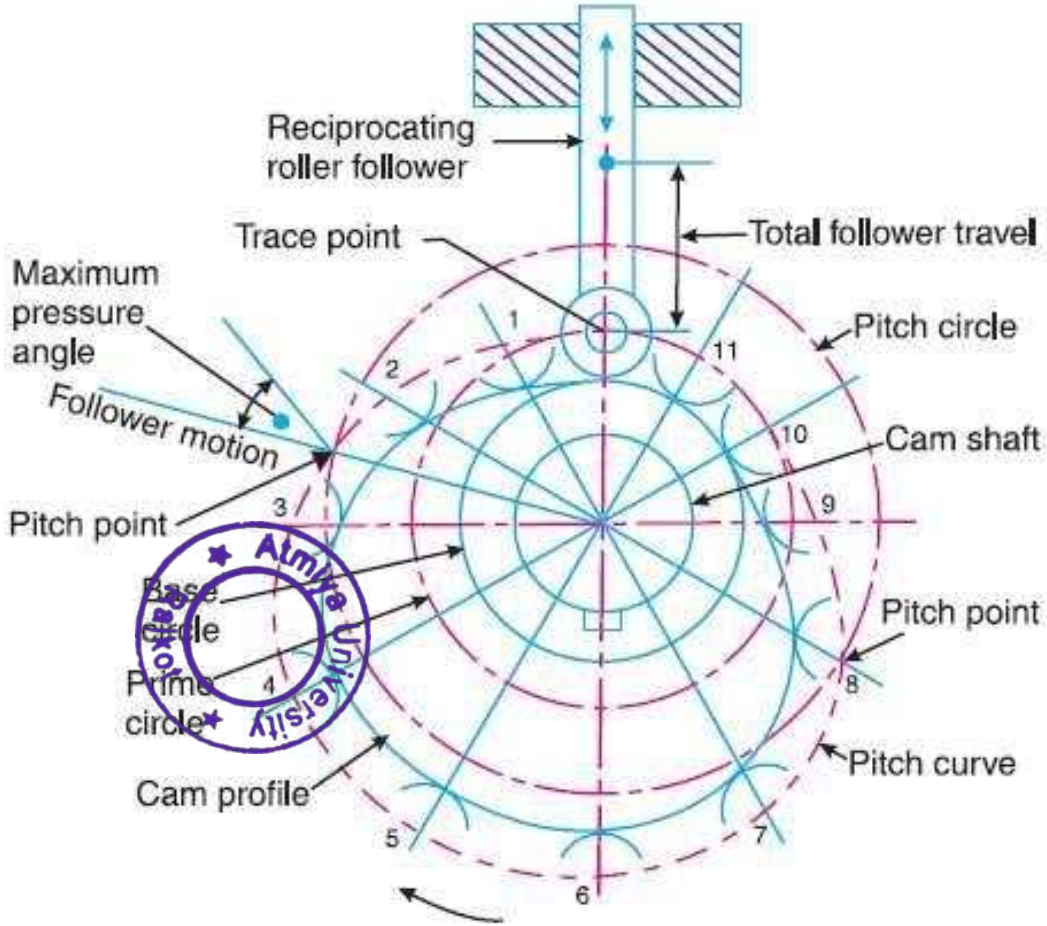

Atmiya University Rajkot

Motion of the Follower

- The follower, during its travel, may have one of the following motions.

  1. **Uniform velocity**
  2. **Simple harmonic motion**
  3. **Uniform acceleration and retardation,**
  4. **Cycloidal motion.**

- Displacement, velocity and acceleration diagrams for the cam has been explained when the follower moves with the above mentioned motions.

Atmiya University Rajkot

Displacement, Velocity and Acceleration Diagrams when the Follower Moves with Uniform Velocity

The displacement, velocity and acceleration diagrams when a knife-edged follower moves with uniform velocity are shown in Fig. 20.4 (*a*), (*b*) and (*c*) respectively. The abscissa (base) represents the time (*i.e.* the number of seconds required for the cam to complete one revolution) or it may represent the angular displacement of the cam in degrees. The ordinate represents the displacement, or velocity or acceleration of the follower.

Since the follower moves with uniform velocity during its rise and return stroke, therefore the slope of the displacement curves must be constant. In other words, AB_1 and C_1D must be straight lines. A little consideration will show that the follower remains at rest during part of the cam rotation. The periods during which the follower remains at rest are known as ***dwell periods***, as shown by lines B_1C_1 and DE in Fig. 20.4 (*a*). From Fig. 20.4 (*c*), we see that the acceleration or retardation of the follower at the beginning and at the end of each stroke is infinite. This is due to the fact that the follower is required to start from rest and has to gain a velocity within no time. This is only possible if the acceleration or retardation at the beginning and at the end of each stroke is infinite. These conditions are however impracticable.

Atmiya University Rajkot

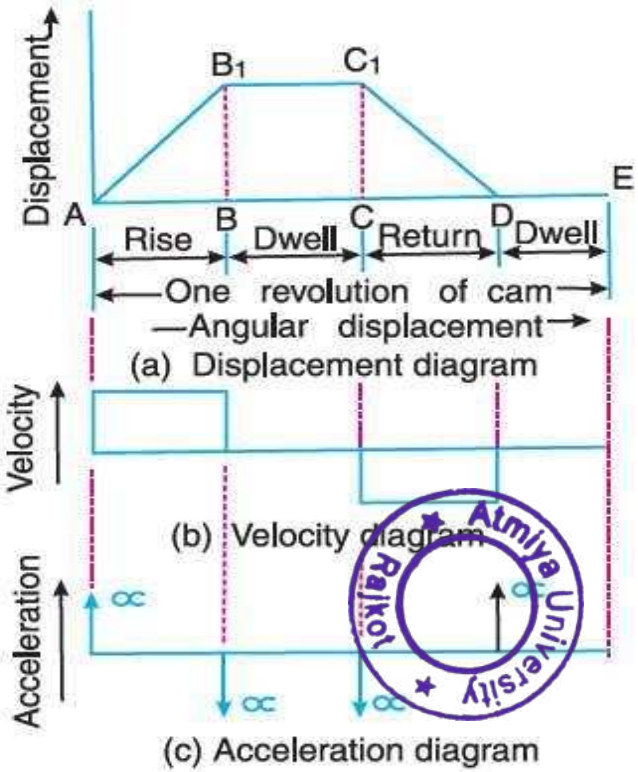

Fig. 20.4. Displacement, velocity and acceleration diagrams when the follower moves with uniform velocity.

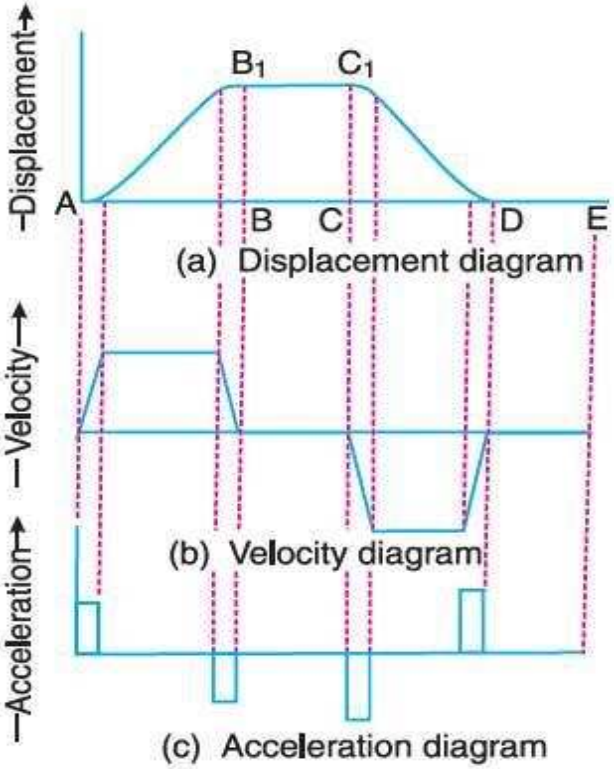

Fig. 20.5. Modified displacement, velocity and acceleration diagrams when the follower moves with uniform velocity.

Atmiya University Rajkot

- In order to have the acceleration and retardation within the finite limits, it is necessary to modify the conditions which govern the motion of the follower. This may be done by rounding off the sharp corners of the displacement diagram at the beginning and at the end of each stroke, as shown in Fig. 20.5 (*a*). *By doing so, the velocity of the follower* increases gradually to its maximum value at the beginning of each stroke and decreases gradually to zero at the end of each stroke as shown in Fig. 20.5 (*b*). *The modified* displacement, velocity an acceleration diagrams are shown in Fig. 20.5. The round corners of the displacement diagram are usually parabolic curves because the parabolic motion results in a very low acceleration of the follower for a given stroke and cam speed.

Atmiya University Rajkot

Example 1. ***A cam is to give the following motion to a knife-edged follower : 1. Outstroke during 60° of cam rotation ; 2. Dwell for the next 30° of cam rotation ; 3. Return stroke during next 60° of cam rotation, and 4. Dwell for the remaining 210° of cam rotation. The stroke of the follower is 40 mm and the minimum radius of the cam is 50 mm. The follower moves with uniform velocity during both the outstroke and return strokes. Draw the profile of the cam when (a) the axis of the follower passes through the axis of the cam shaft, and(b) the axis of the follower is offset by 20 mm from the axis of the cam shaft.***

Construction

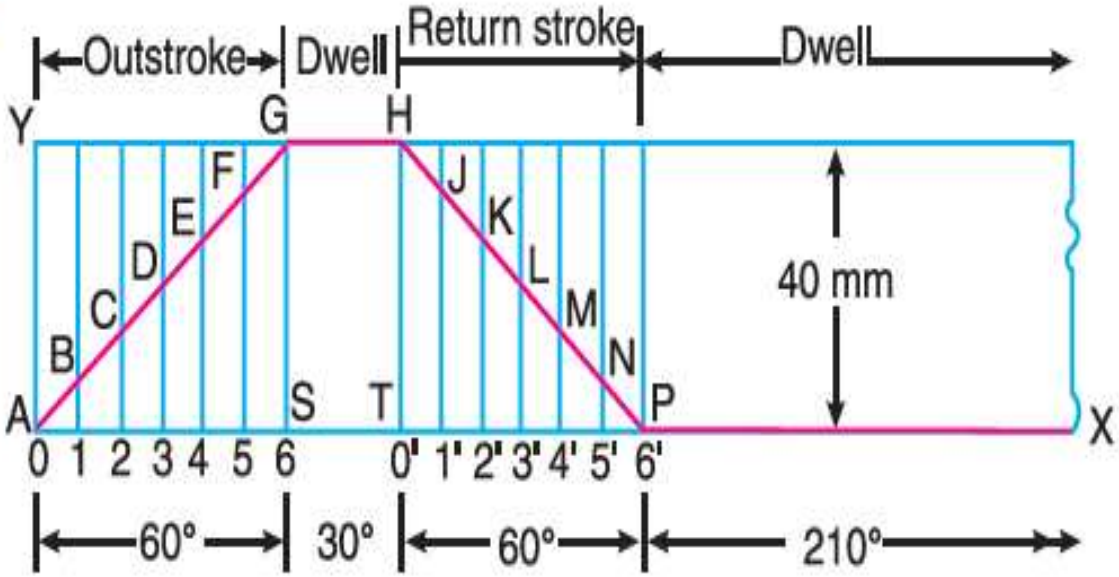

Atmiya University Rajkot

First of all, the displacement diagram, as shown in Fig. 20.10, is drawn as discussed in the following steps :

1. Draw a horizontal line $AX = 360°$ to some suitable scale. On this line, mark $AS = 60°$ to represent outstroke of the follower, $ST = 30°$ to represent dwell, $TP = 60°$ to represent return stroke and $PX = 210°$ to represent dwell.
2. Draw vertical line AY equal to the stroke of the follower (*i.e.* 40 mm) and complete the rectangle as shown in Fig. 20.10.
3. Divide the angular displacement during outstroke and return stroke into any equal number of even parts (say six) and draw vertical lines through each point.
4. Since the follower moves with uniform velocity during outstroke and return stroke, therefore the displacement diagram consists of straight lines. Join AG and HP.
5. The complete displacement diagram is shown by $AGHPX$ in Fig. 20.10.

Atmiya University Rajkot

(a) Profile of the cam when the axis of follower passes through the axis of cam shaft

- The profile of the cam when the axis of the follower passes through the axis of the cam shaft, as shown in Fig. 20.11, is drawn as discussed in the follow

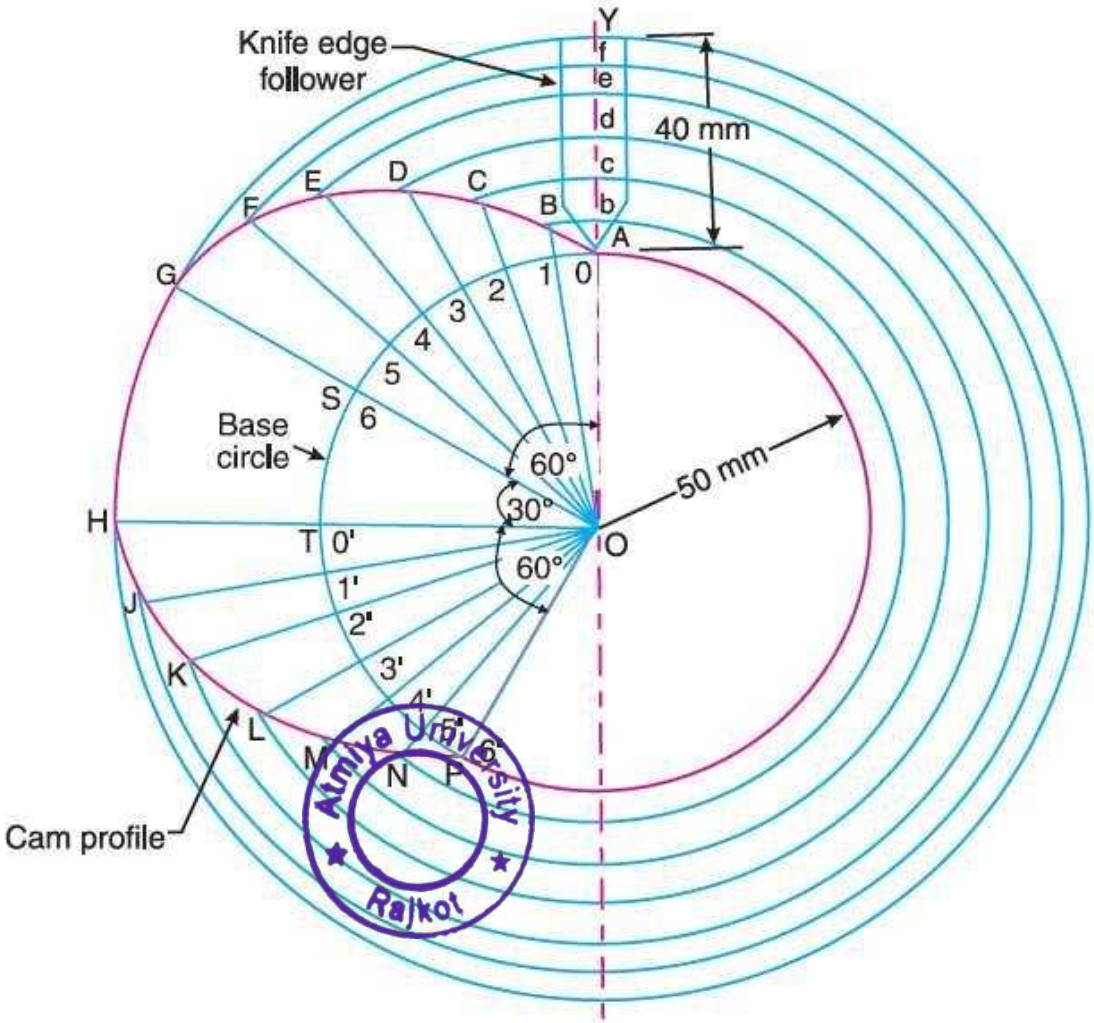

1. Draw a base circle with radius equal to the minimum radius of the cam (*i.e.* 50 mm) with O as centre.
2. Since the axis of the follower passes through the axis of the cam shaft, therefore mark trace point A, as shown in Fig. 20.11.
3. From OA, mark angle $AOS = 60°$ to represent outstroke, angle $SOT = 30°$ to represent dwell and angle $TOP = 60°$ to represent return stroke.
4. Divide the angular displacements during outstroke and return stroke (*i.e.* angle AOS and angle TOP) into the same number of equal even parts as in displacement diagram.
5. Join the points 1, 2, 3 ...etc and $0', 1', 2', 3'$, ... etc. with centre O and produce beyond the base circle as shown in Fig. 20.11.
6. Now set off $1B$, $2C$, $3D$ ... etc. and $0'H, 1'J$ ... etc. from the displacement diagram.
7. Join the points A, B, C,... M, N, P with a smooth curve. The curve $AGHPA$ is the complete profile of the cam.

Atmiya University Rajkot

(b) Profile of the cam when the axis of the follower is offset by 20 mm from the axis of the cam shaft

The profile of the cam when the axis of the follower is offset from the axis of the cam shaft, as shown in Fig. 20.12, is drawn as discussed in the following steps:

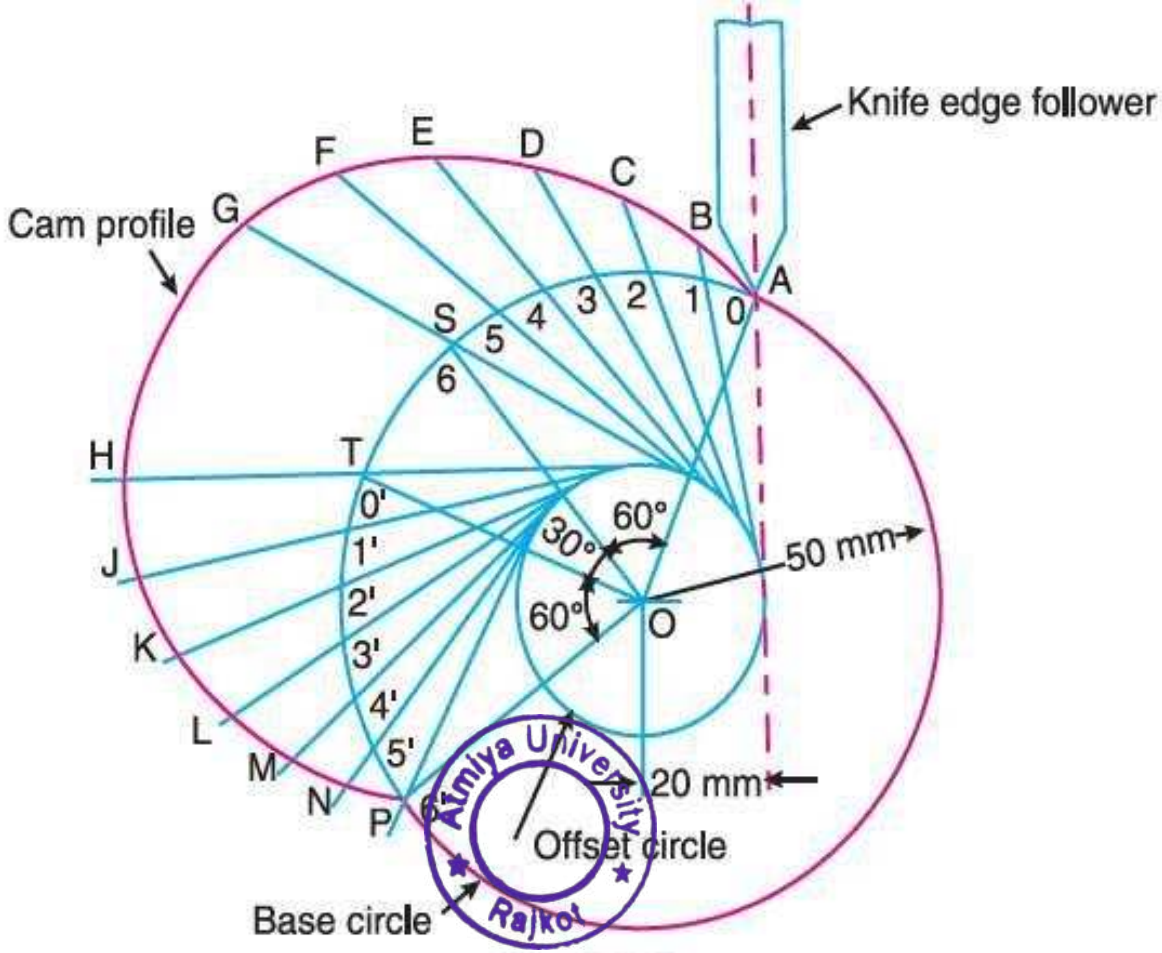

Fig. 20.12

1. Draw a base circle with radius equal to the minimum radius of the cam (*i.e.* 50 mm) with O as centre.
2. Draw the axis of the follower at a distance of 20 mm from the axis of the cam, which intersects the base circle at A.
3. Join AO and draw an offset circle of radius 20 mm with centre O.
4. From OA, mark angle $AOS = 60°$ to represent outstroke, angle $SOT = 30°$ to represent dwell and angle $TOP = 60°$ to represent return stroke.
5. Divide the angular displacement during outstroke and return stroke (*i.e.* angle AOS and angle TOP) into the same number of equal even parts as in displacement diagram.
6. Now from the points 1, 2, 3 ... etc. and $0', 1', 2', 3'$ ... etc. on the base circle, draw tangents to the offset circle and produce these tangents beyond the base circle as shown in Fig. 20.12.
7. Now set off $1B$, $2C$, $3D$ ... etc. and $0'H, 1'J$ ... etc. from the displacement diagram.
8. Join the points A, B, C ...M, N, P with a smooth curve. The curve $AGHPA$ is the complete profile of the cam.

Atmiya University Rajkot
Atmiya University Rajkot

SIMPLE HARMONIC MOTION

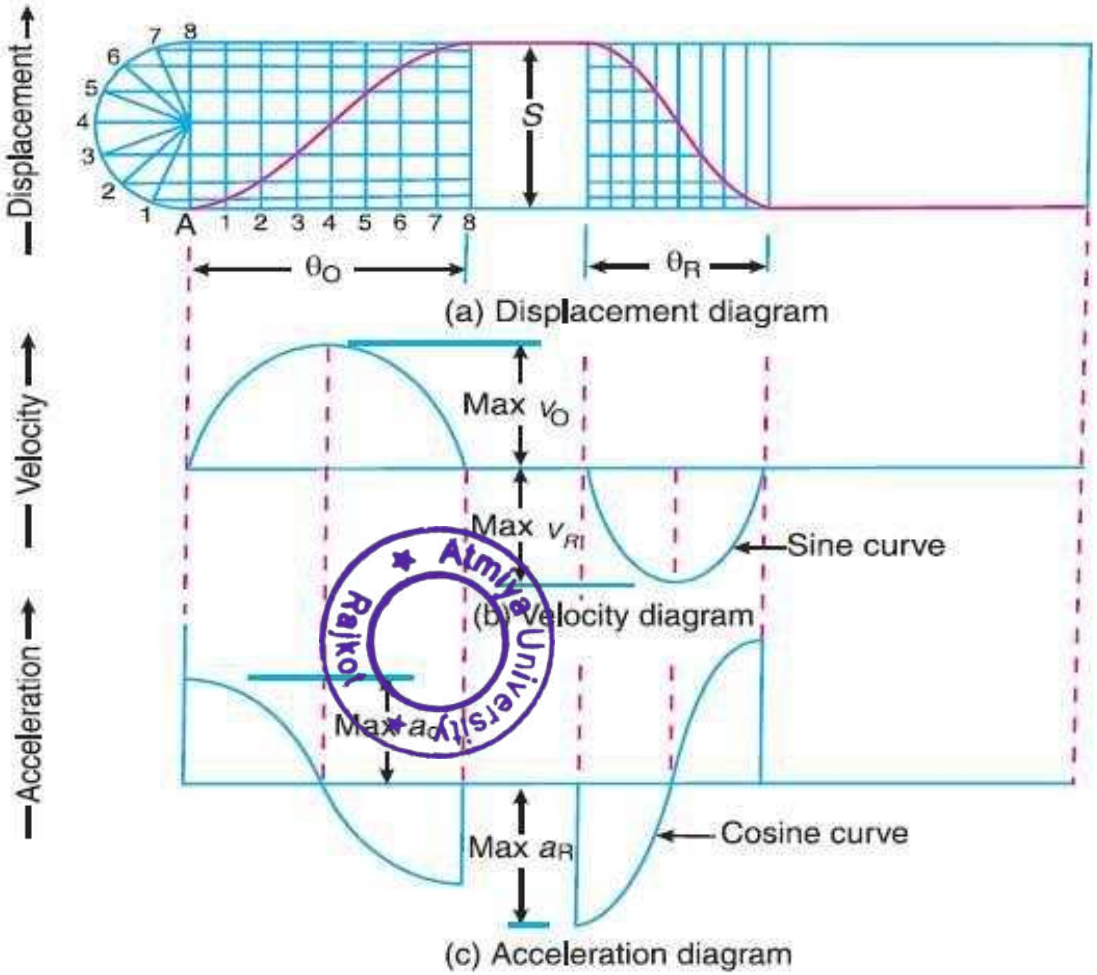

Atmiya University Rajkot

Cont….

- Maxi. Velocity & acceleration during ascent & descent

$$v_O = \frac{\pi\omega.S}{2\theta_O}$$

$$v_R = \frac{\pi\omega.S}{2\theta_R}$$

$$a_O = a_P = \frac{\pi^2\omega^2.S}{2(\theta_O)^2}$$

$$a_R = \frac{\pi^2\omega^2.S}{2(\theta_R)^2}$$

Atmiya University Rajkot

UNIFORM ACCELERATION & RETARDATION

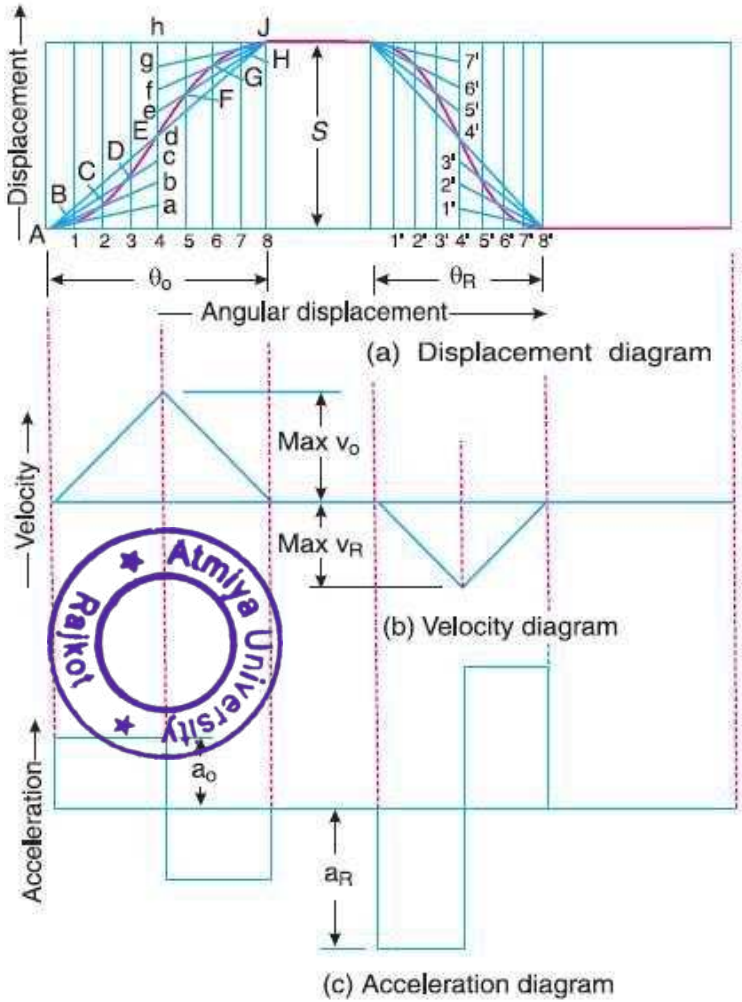

Atmiya University Rajkot

Cont….

- Maxi. Velocity & acceleration during ascent & descent

$$v_O = \frac{2\omega S}{\theta_O}$$

$$v_R = \frac{2\omega S}{\theta_R}$$

$$a_O = \frac{4\omega^2 . S}{(\theta_O)^2}$$

$$a_R = \frac{4\omega^2 . S}{(\theta_R)^2}$$

Atmiya University Rajkot

CYCLOIDAL MOTION

Circle of radius $S/2\pi$ with A as centre

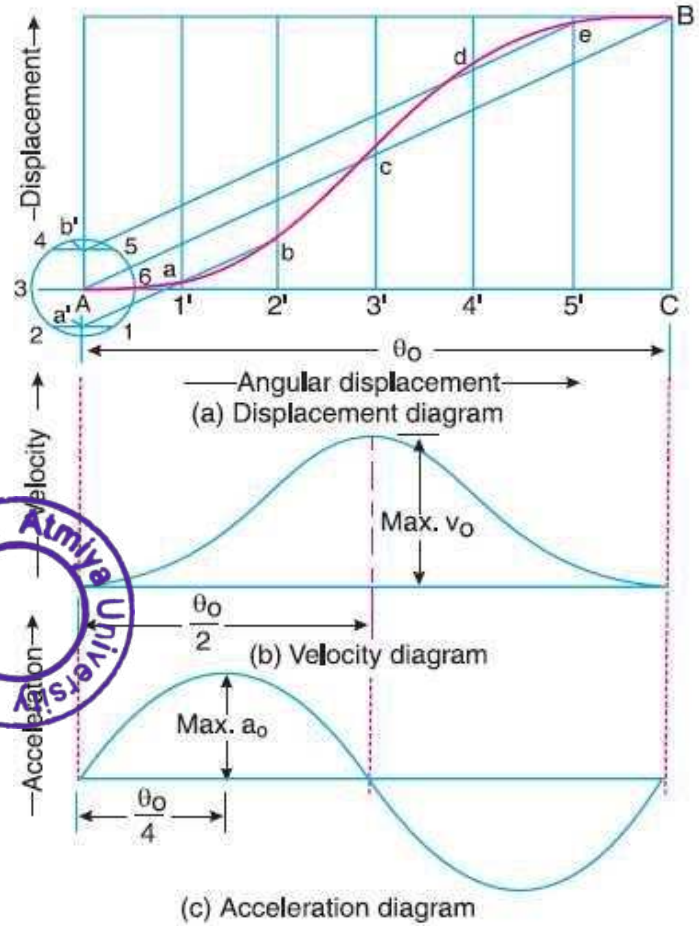

Atmiya University Rajkot

Cont….

- Maxi. Velocity & acceleration during ascent & descent

$$v_O = \frac{2\omega S}{\theta_O}$$

$$v_R = \frac{2\omega S}{\theta_R}$$

$$a_O = \frac{2\pi\omega^2 . S}{(\theta_O)^2}$$

$$a_R = \frac{2\pi\omega^2 . S}{(\theta_R)^2}$$

Atmiya University Rajkot

EXAMPLE

- Angular displacement of the roller follower =20°=20×π/180=π/9 rad

- The displacement of the roller actually takes place =120 × π/ 9=41.88 mm

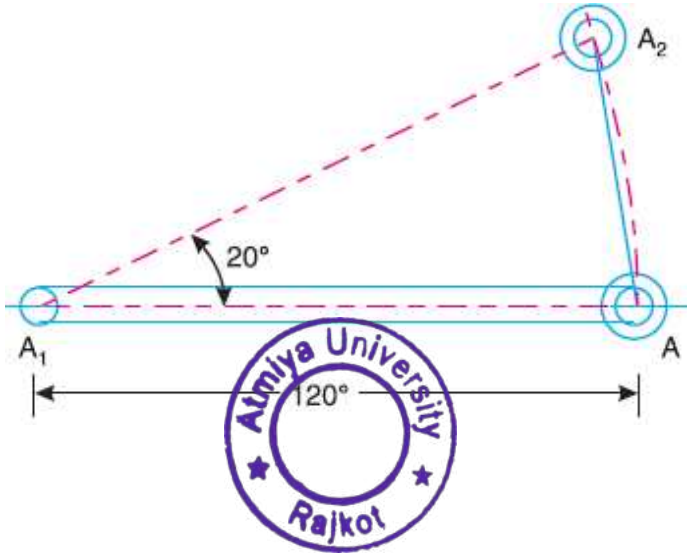

Displacement Diagram

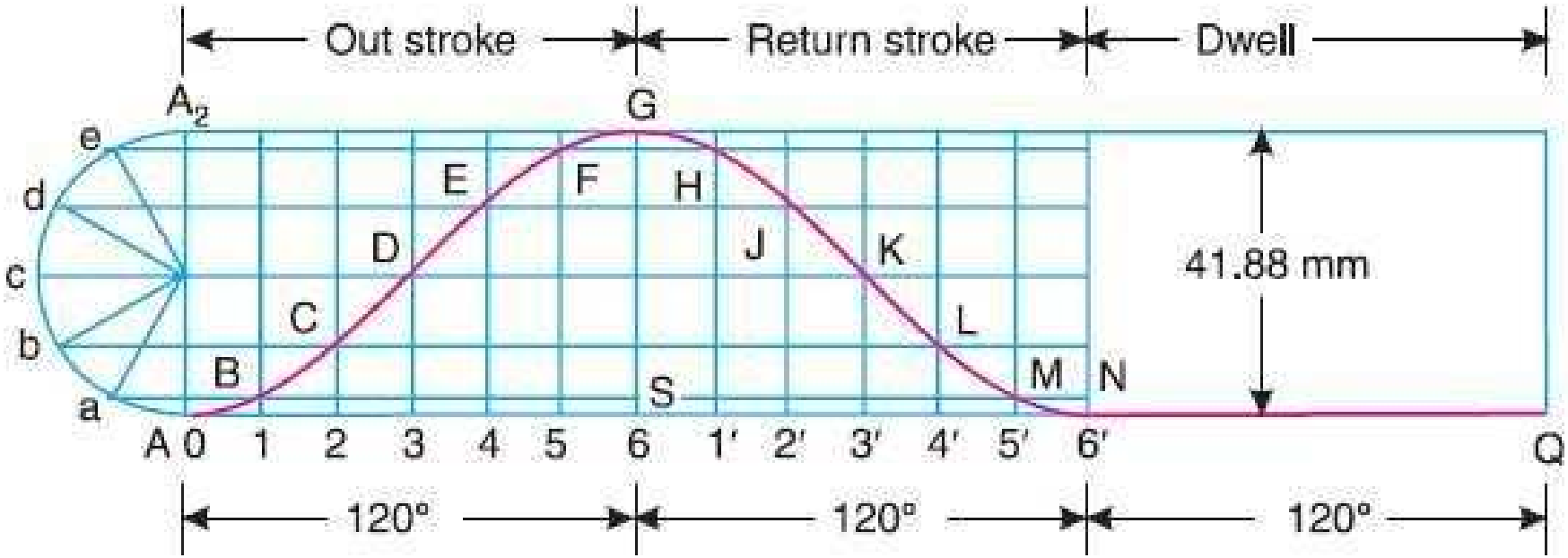

Atmiya University Rajkot

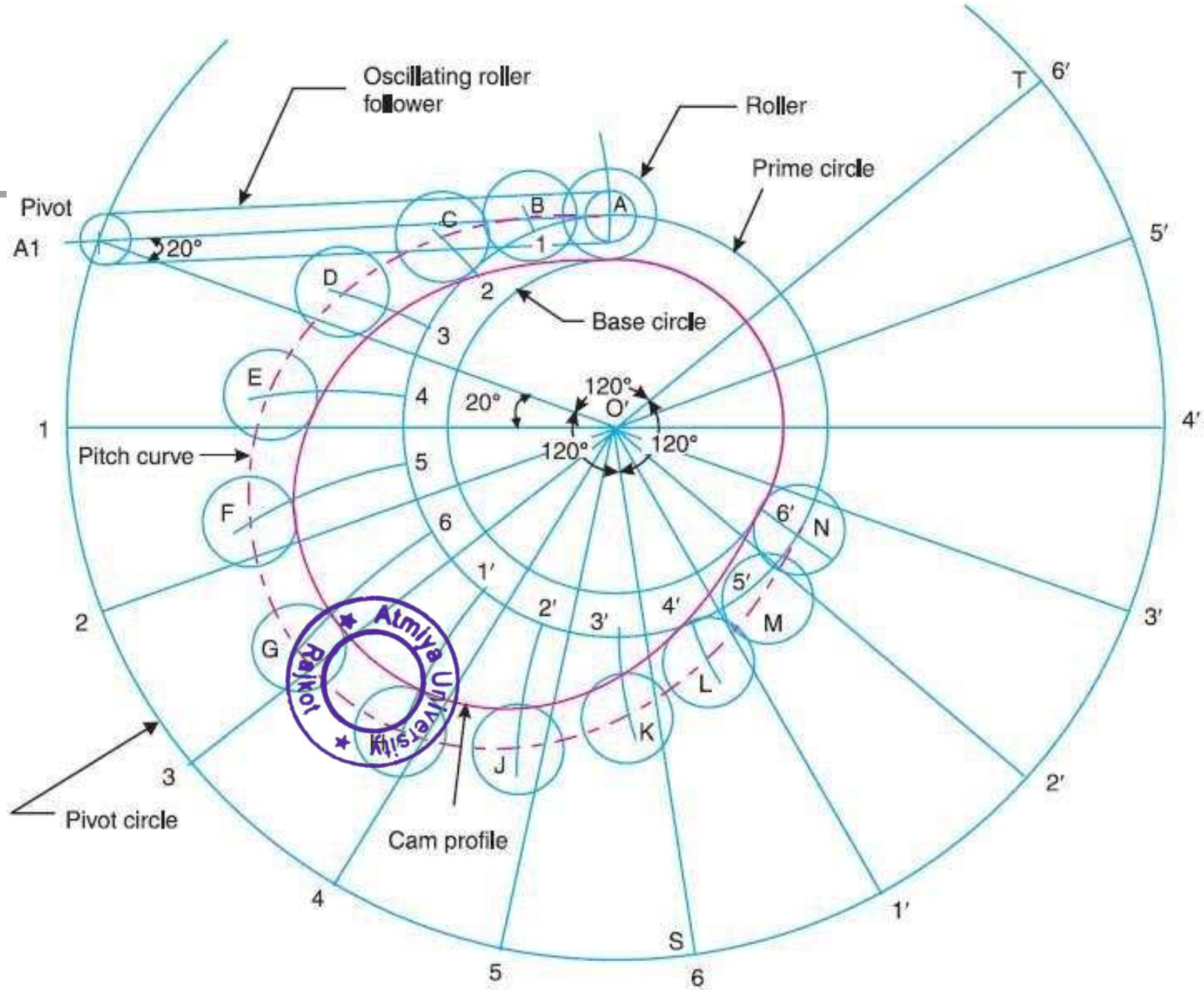
Oscillating roller follower
Roller
Prime circle
Pivot
A1
20°
Base circle
Pitch curve
120°
O′
Pivot circle
Cam profile
A
B
C
D
E
F
G
H
J
K
L
M
N
T
S
1
2
3
4
5
6
1′
2′
3′
4′
5′
6′

Atmiya University, Rajkot
Faculty of Engineering & Technology

Department of Mechanical Engineering

Prepared by: Shivang S. Jani

Course: Theory of Machines(21BTMECC303)

Unit III: Gyroscope

Gyroscope

Atmiya University
Rajkot

Gyroscope

- When a body moves along a curved path with a uniform linear velocity, a force in the direction of centripetal acceleration (known as centripetal force) has to be applied externally over the body, so that it moves along the required curved path.
- This external force applied is known as ***active force.***
- When a body, itself, is moving with uniform linear velocity along a circular path, it is subjected to the centrifugal force radially outwards.
- This centrifugal force is called ***reactive force.***
- The action of the reactive or centrifugal force is to tilt or move the body along radially outward direction.

Atmiya University Rajkot

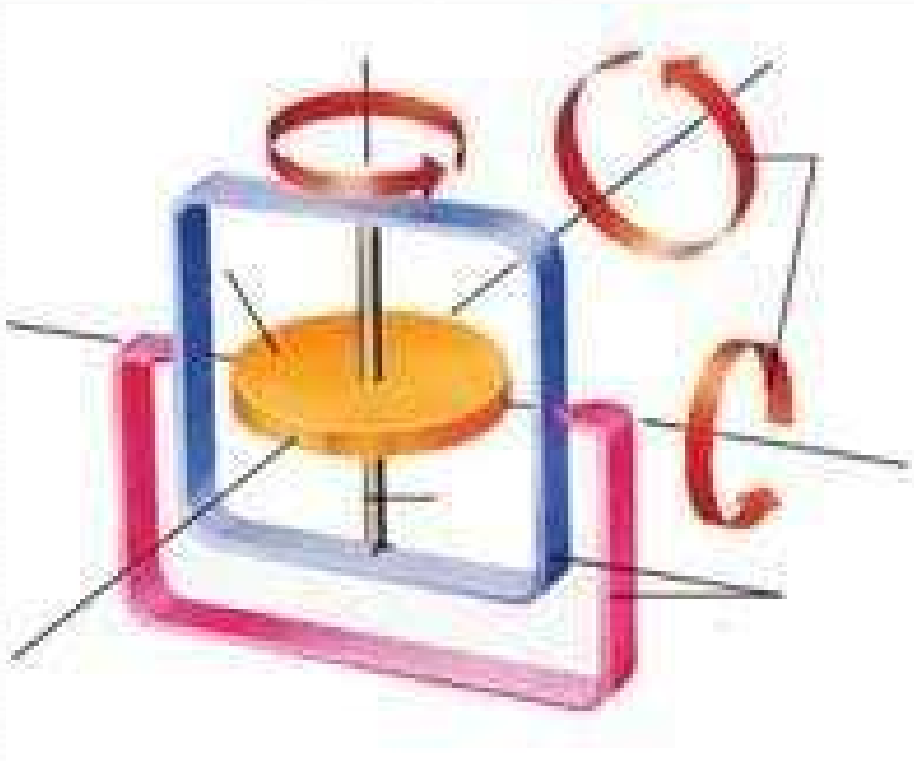

Atmiya University
Rajkot

Precessional Angular Motion

- Angular acceleration is the rate of change of angular velocity with respect to time.
- It is a vector quantity and may be represented by drawing a vector diagram with the help of right hand screw rule.

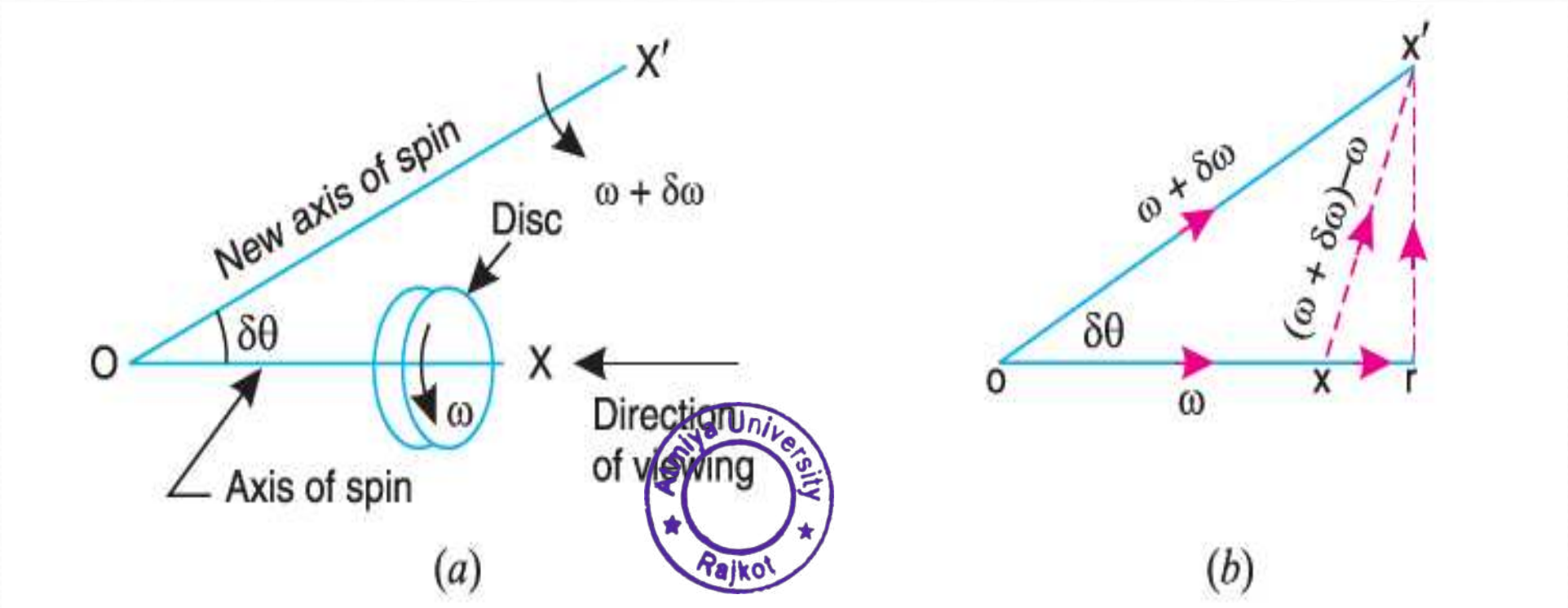

Atmiya University Rajkot

Precessional Angular Motion

- Angular acceleration is the rate of change of angular velocity with respect to time.
- It is a vector quantity and may be represented by drawing a vector diagram with the help of right hand screw rule.

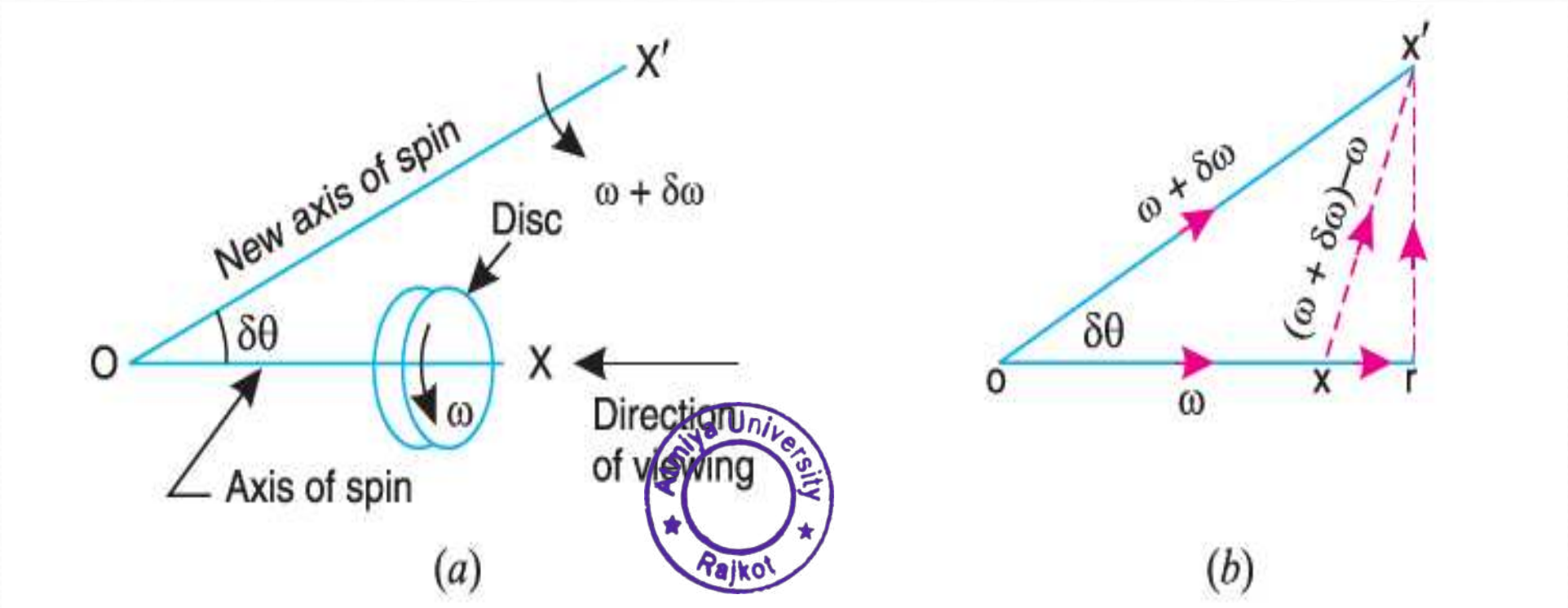

Atmiya University Rajkot

- Consider a disc, as shown in Fig. (a), revolving or spinning about the axis OX (known as axis of spin) in anticlockwise when seen from the front, with an angular velocity in a plane at right angles to the paper.
- After a short interval of time t, let the disc be spinning about the new axis of spin OX (at an angle) with an angular velocity (+)
- Using the right hand screw rule, initial angular velocity of the disc () is represented by vector *ox; and the final angular velocity of the disc (+) is* represented by vector *ox as shown in Fig.(b).*

Atmiya University Rajkot

- The vector *xx represents the change of angular* velocity in time *t i.e. the angular acceleration of the disc.*
- *This may be resolved into two components,* one parallel to *ox and the other perpendicular to ox.*

Component of angular acceleration in the direction of *ox*,

$$\alpha_t = \frac{xr}{\delta t} = \frac{or - ox}{\delta t} = \frac{ox' \cos \delta\theta - ox}{\delta t}$$

$$= \frac{(\omega + \delta\omega) \cos \delta\theta - \omega}{\delta t} = \frac{\omega \cos \delta\theta + \delta\omega \cos \delta\theta - \omega}{\delta t}$$

Since $\delta\theta$ is very small, therefore substituting $\cos \delta\theta = 1$, we have

$$\alpha_t = \frac{\omega + \delta\omega - \omega}{\delta t} = \frac{\delta\omega}{\delta t}$$

Atmiya University Rajkot

Download more at Learn

In the limit, when $\delta t \to 0$,

$$\alpha_t = \underset{\delta t \to 0}{\text{Lt}} \left(\frac{\delta\omega}{\delta t} \right) = \frac{d\omega}{dt}$$

Component of angular acceleration in the direction perpendicular to *ox*,

$$\alpha_c = \frac{rx'}{\delta t} = \frac{ox' \sin\delta\theta}{\delta t} = \frac{(\omega + \delta\omega)\sin\delta\theta}{\delta t} = \frac{\omega\sin\delta\theta + \delta\omega.\sin\delta\theta}{\delta t}$$

Since $\delta\theta$ in very small, therefore substituting $\sin\delta\theta = \delta\theta$, we have

$$\alpha_c = \frac{\omega.\delta\theta + \delta\omega.\delta\theta}{\delta t} = \frac{\omega.\delta\theta}{\delta t}$$

...(Neglecting $\delta\omega.\delta\theta$, being very small)

In the limit when $\delta t \to 0$,

$$\alpha_c = \underset{\delta t \to 0}{\text{Lt}} \frac{\omega.\delta\theta}{\delta t} = \omega \times \frac{d\theta}{dt} = \omega.\omega_P \qquad \ldots\left(\text{Substituting } \frac{d\theta}{dt} = \omega_P\right)$$

$\therefore$ Total angular acceleration of the disc

$$= \text{vector } xx' = \text{vector sum of } \alpha_t \text{ and } \alpha_c$$

$$= \frac{d\omega}{dt} + \omega \times \frac{d\theta}{dt} = \frac{d\omega}{dt} + \omega.\omega_P$$

Atmiya University Rajkot

- Where *$d\Theta/dt$ is the angular velocity of the axis of spin about a certain axis, which is perpendicular to* the plane in which the axis of spin is going to rotate. This angular velocity of the axis of spin (*i.e.$d\Theta/dt$) is known as* ***angular velocity of precession and is denoted by*** $\boldsymbol{\omega_P}$
- The axis, about which the axis of spin is to turn, is known as ***axis of precession.***
- The angular motion of the axis of spin about the axis of precession is known as ***precessional angular motion.***

Saurashtra University Rajkot

Gyroscopic Couple

- Consider a disc spinning with an angular velocity rad/s about the axis of spin *OX, in* anticlockwise direction when seen from the front, as shown in Fig. (*a*).
- Since the plane in which the disc is rotating is parallel to the plane *YOZ, therefore it is called* ***plane of spinning.***
- The plane *XOZ is a horizontal plane and the axis of spin rotates in a plane parallel to the horizontal plane about* an axis *OY.*
- In other words, the axis of spin is said to be rotating or processing about an axis *OY.*

Atmiya University Rajkot

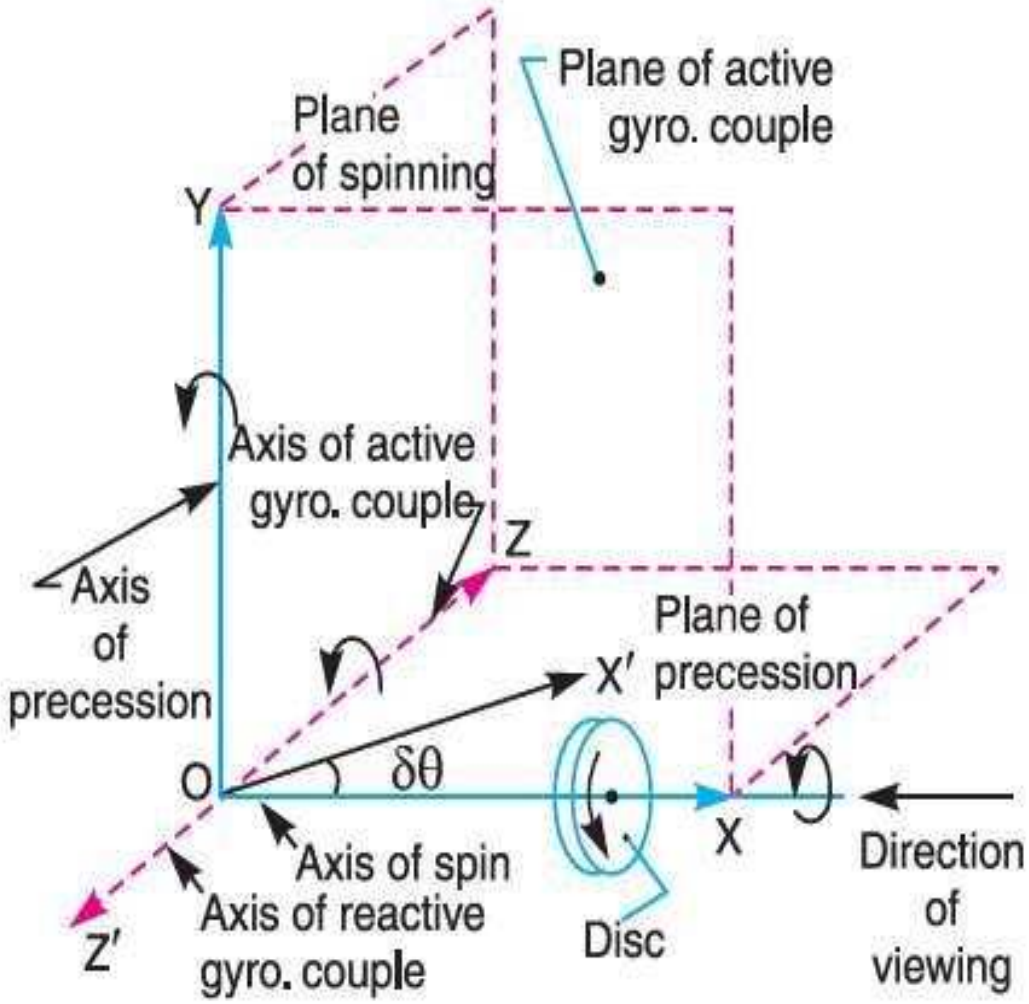

(a)

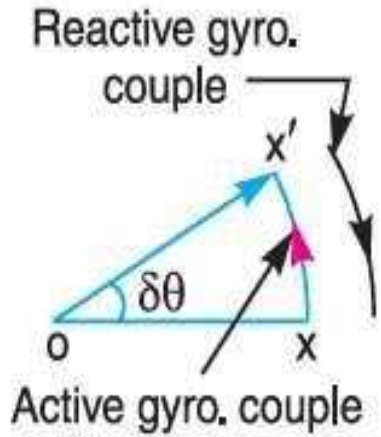

(b)

Atmiya University
Rajkot

- In other words, the axis of spin is said to be rotating or processing about an axis *OY (which is perpendicular* to both the axes *OX and OZ) at an angular velocity* ω_p.
- This horizontal plane *XOZ is called* ***plane of precession and OY is the axis of precession.***

Let,

- *I = Mass moment of inertia of the disc about OX, and*
- ω = Angular velocity of the disc.
- Angular momentum of the disc = I ω

Atmiya University Rajkot

- Since the angular momentum is a vector quantity, therefore it may be represented by the vector *ox* as shown in Fig. (*b*).
- The axis of spin *OX is also rotating anticlockwise when seen* from the top about the axis *OY.*
- Let the axis *OX is turned in the plane XOZ through a small angle* radians to the position *OX'* in time δ*t seconds*.
- Assuming the angular velocity ω to be constant, the angular momentum will now be represented by vector *ox'*

Atmiya University Rajkot

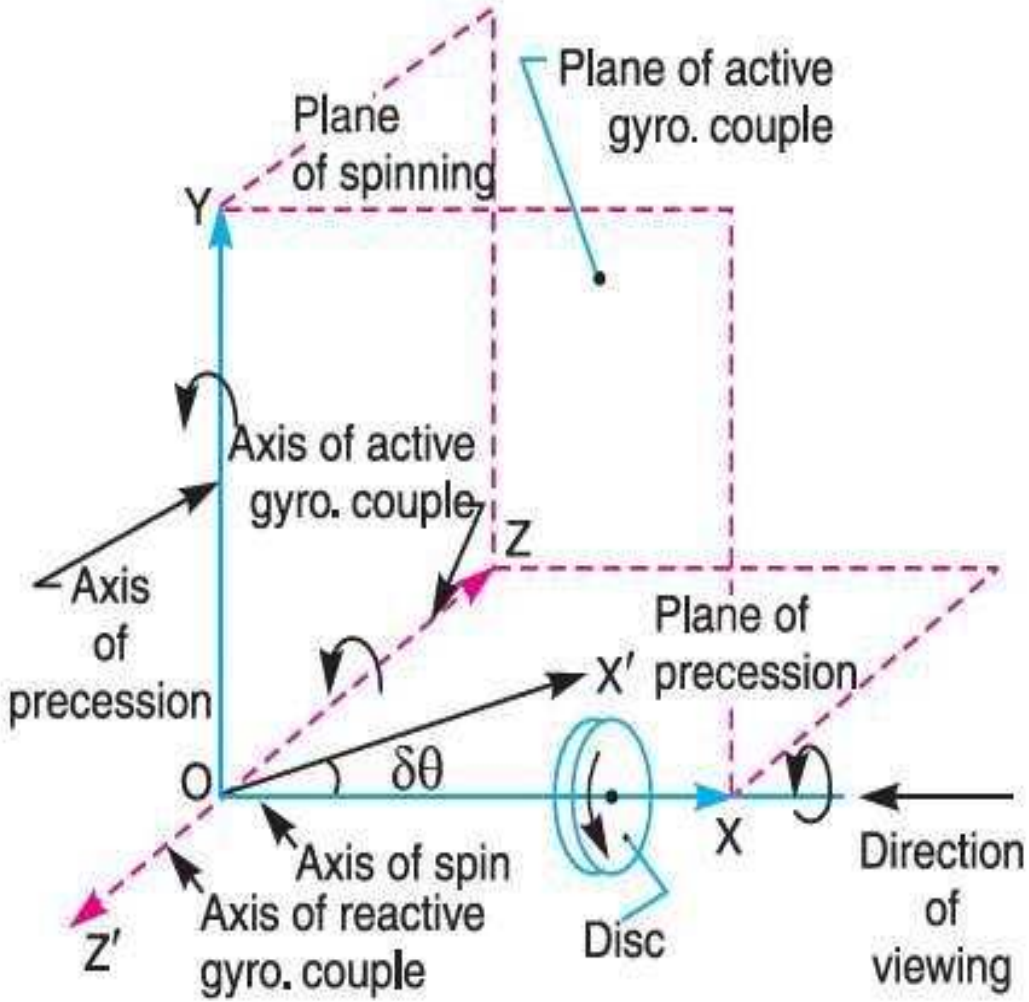

(a)

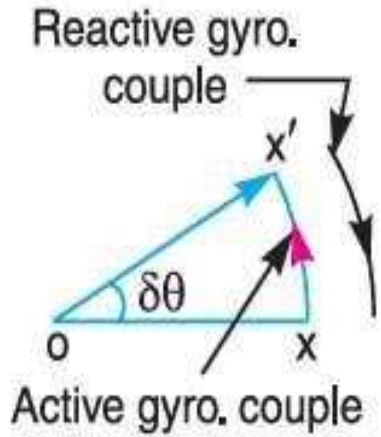

(b)

Atmiya University
Rajkot

$\therefore$ Change in angular momentum

$$= \vec{ox'} - \vec{ox} = \vec{xx'} = \vec{ox}.\delta\theta \qquad \text{...(in the direction of } \vec{xx'}\text{)}$$

$$= I.\ \omega.\delta\theta$$

and rate of change of angular momentum

$$= I.\omega \times \frac{\delta\theta}{dt}$$

Since the rate of change of angular momentum will result by the application of a couple to the disc, therefore the couple applied to the disc causing precession,

$$C = \underset{\delta t \to 0}{\text{Lt}}\ I.\omega \times \frac{\delta\theta}{\delta t} = I.\omega \times \frac{d\theta}{dt} = I.\omega.\omega_p \qquad \ldots\left(\because \frac{d\theta}{dt} = \omega_p\right)$$

Atmiya University Rajkot

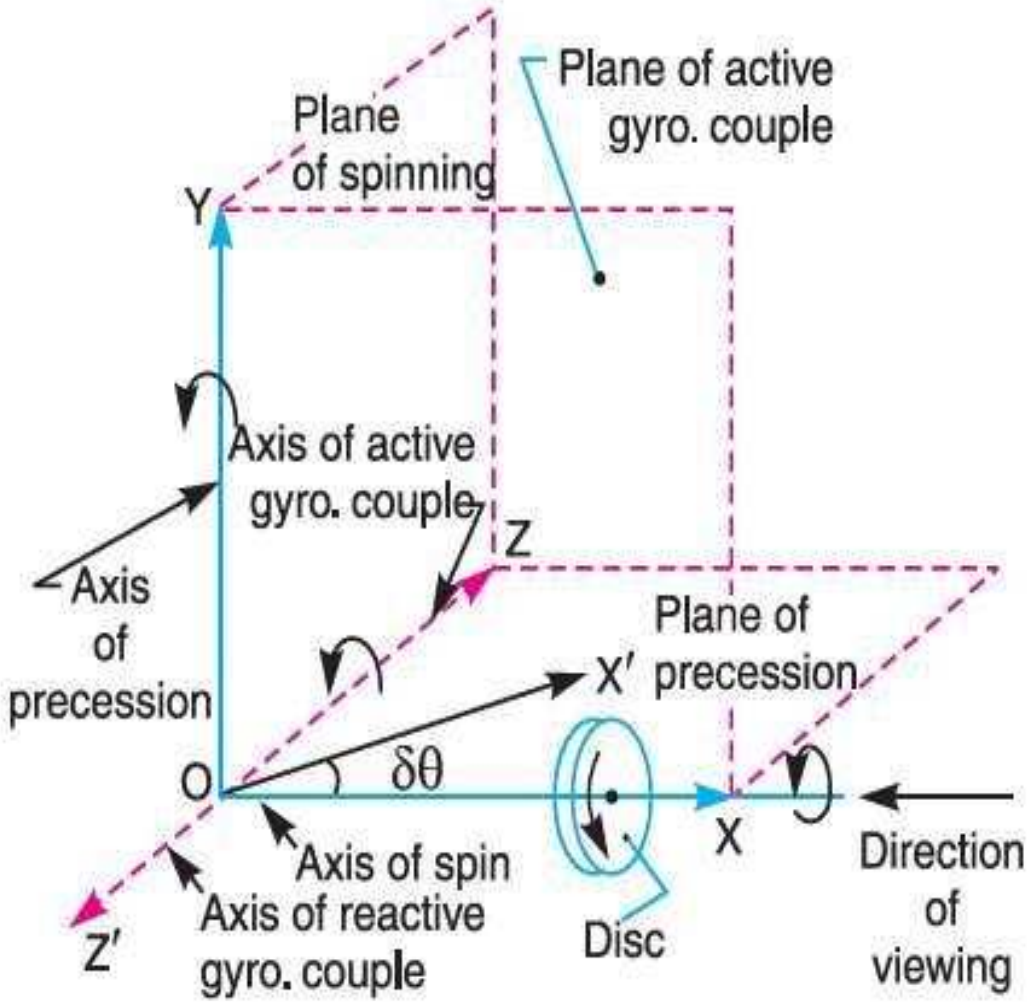

(a)

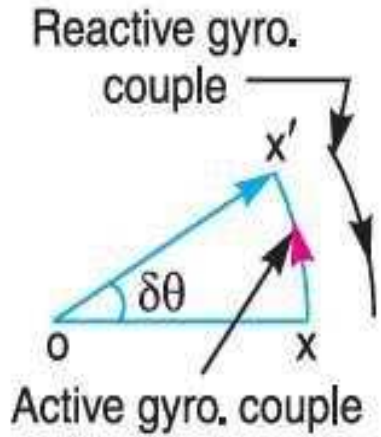

(b)

Atmiya University
Rajkot

- where ω_P = Angular velocity of precession of the axis of spin or the speed of rotation of the axis of spin about the axis of precession *OY.*
- In S.I. units, the units of *C is N-m when I is* in kg-m^2.
- The couple $I.\omega.\omega_p$ *in the direction of* the vector *xx' (representing the change in angular* momentum) is the ***active gyroscopic couple***, which has to be applied over the disc when the axis of spin is made to rotate with angular velocity ω_p about the axis of precession.

Atmiya University Rajkot

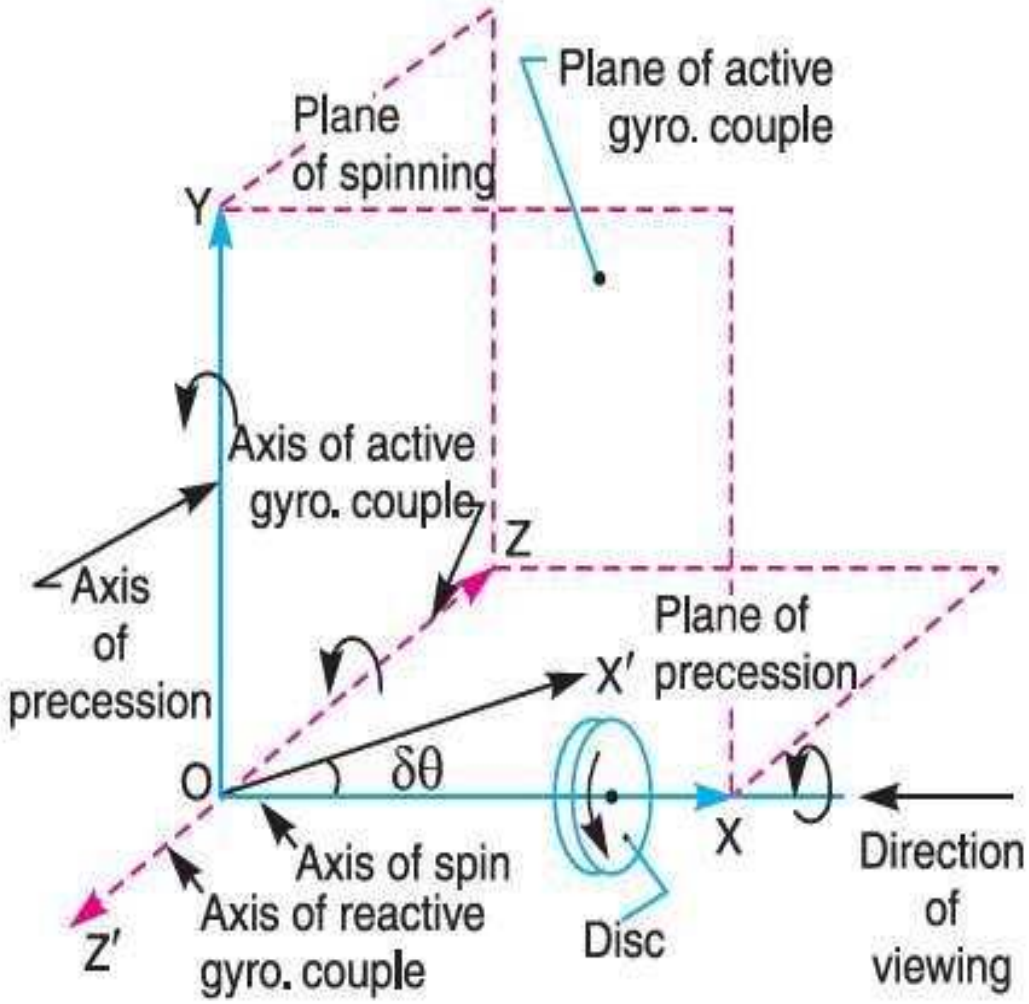

(a)

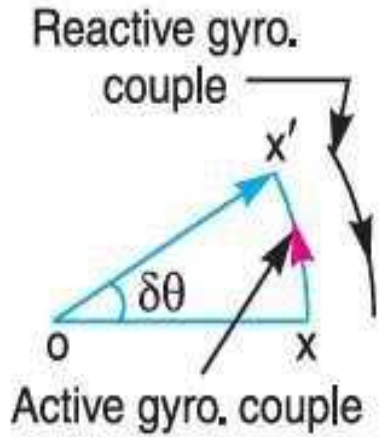

(b)

Atmiya University
Rajkot

- The vector *xx' lies in the* plane *XOZ or the horizontal plane. In case of a very* small displacement δΘ , the vector *xx' will be* perpendicular to the vertical plane *XOY.*
- Therefore the couple causing this change in the angular momentum will lie in the plane *XOY.*
- The vector *xx', as shown in Fig.(b),* represents an anticlockwise couple in the plane *XOY.*
- *Therefore, the plane XOY is called the* ***plane of active*** **gyroscopic couple** and the axis OZ perpendicular to the plane XOY, about which the couple acts, is called the axis of active gyroscopic couple.

Aliya University Rajkot

- When the axis of spin itself moves with angular velocity ω_P, the disc is subjected to **reactive couple** whose magnitude is same (i.e $C = I\omega\ \omega_P$) but opposite in direction to that of active couple.
- This reactive couple to which the disc is subjected when the axis of spin rotates about the axis of precession is known as **reactive gyroscopic couple**.
- The axis of the reactive gyroscopic couple is represented by OZ' in Fig.(a).
- The gyroscopic couple is usually applied through the bearings which support the shaft. The bearings will resist equal and opposite couple.

Atmiya University Rajkot

- The gyroscopic principle is used in an instrument or toy known as **gyroscope**.
- The gyroscopes are installed in ships in order to minimize the rolling and pitching effects of waves.
- They are also used in aeroplanes, monorail cars, gyrocompasses etc.

Atmiya University Rajkot

Terms Used in a Naval Ship

- The top and front views of a naval ship are shown in Fig. The fore end of the ship is called bow and the rear end is known as stern or aft.
- The left hand and right hand sides of the ship, when viewed from the stern are called port and star-board respectively.
- Effect of gyroscopic couple on the naval ship is discussed by taking three cases:

  1. Steering, 2. Pitching, and 3. Rolling.

Atmiya University Rajkot

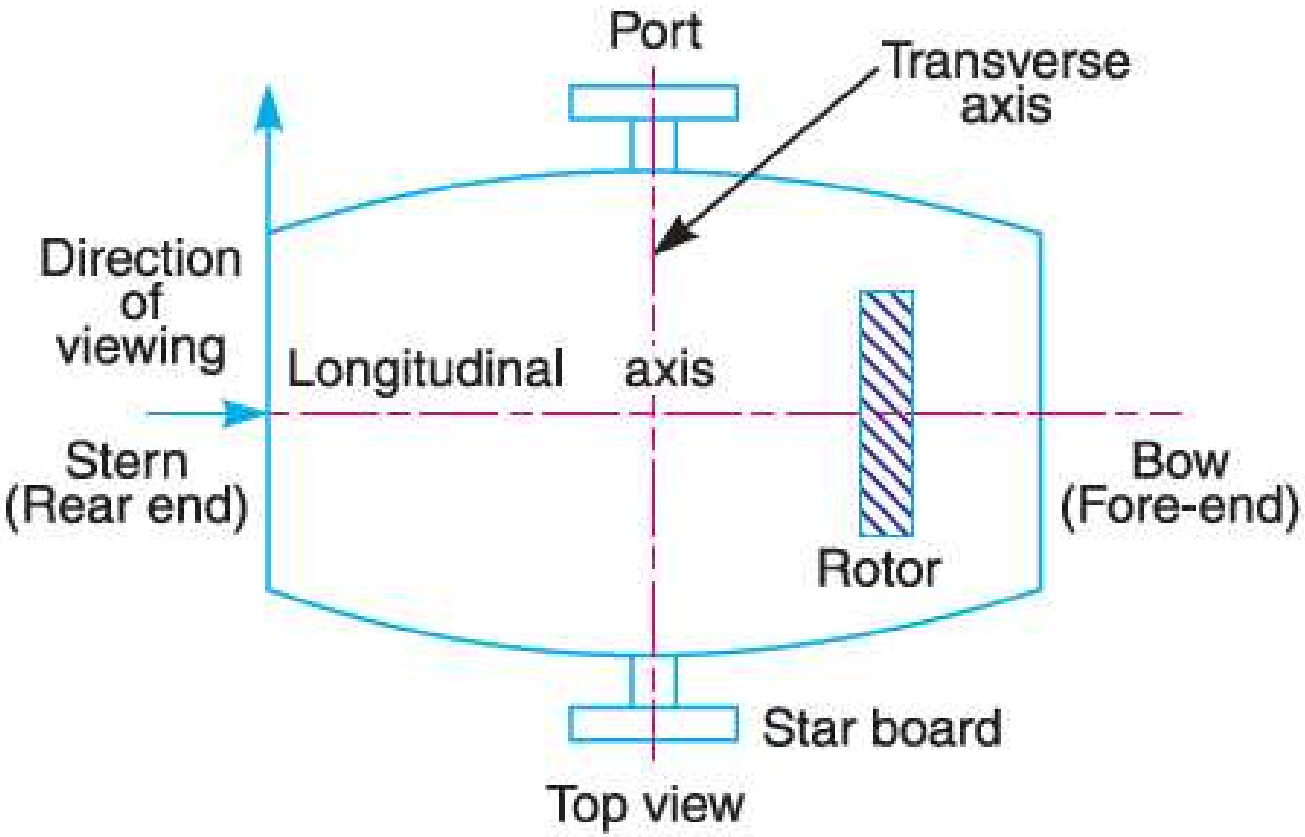

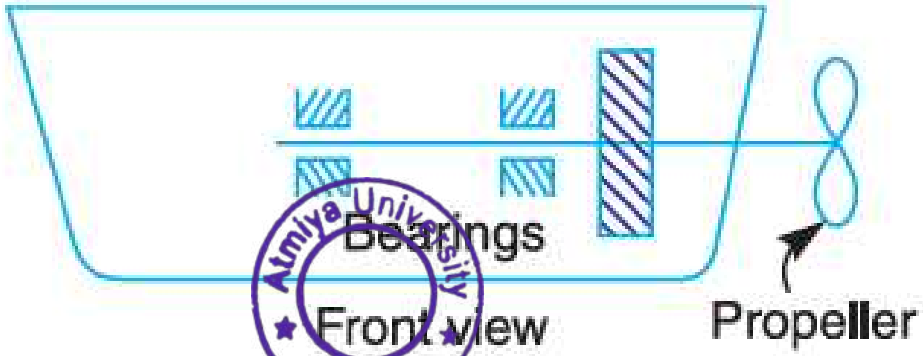

Atmiya University Rajkot

Fig:- Terms used in naval ship

Effect of Gyroscopic Couple on a Naval Ship during Steering

- Steering is the turning of a complete ship in a curve towards left or right, while it moves forward.
- Consider the ship taking a left turn, and rotor rotates in the clockwise direction when viewed from the stern, as shown in Fig.
- The effect of gyroscopic couple on a naval ship during steering taking left or right turn may be obtained in the similar way as for an aeroplane.

Atmiya University Rajkot

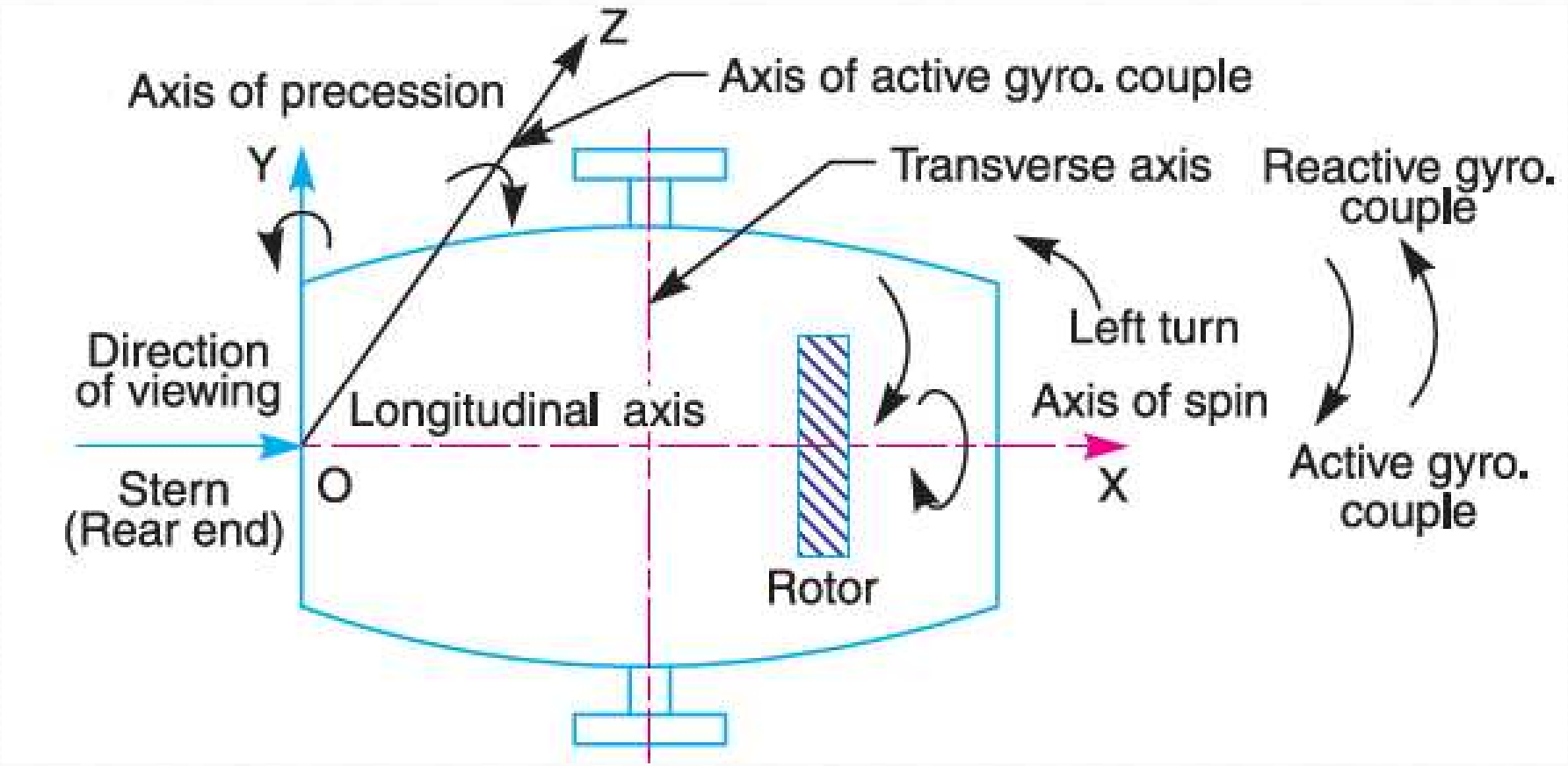

- When the rotor of the ship rotates in the clockwise direction when viewed from the stern, it will have its angular momentum vector in the direction ox as shown in Fig. (a).

Aalya University Rajkot

- As the ship steers to the left, the active gyroscopic couple will change the angular momentum vector from ox to ox'.
- The vector xx' now represents the active gyroscopic couple and is perpendicular to ox.
- Thus the plane of active gyroscopic couple is perpendicular to xx' and its direction in the axis OZ for left hand turn is clockwise as shown in Fig. above.
- The reactive gyroscopic couple of the same magnitude will act in the opposite direction (i.e. in anticlockwise direction).
- The effect of this reactive gyroscopic couple is to **raise the bow and lower the stern**.

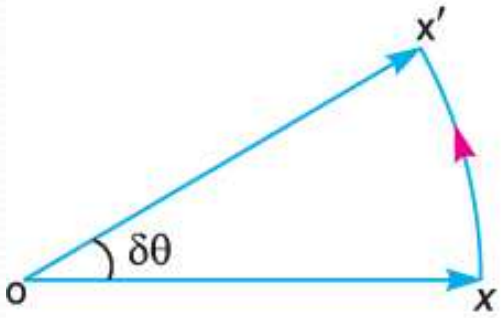

(a) Streeing to the left

Atmiya University Rajkot

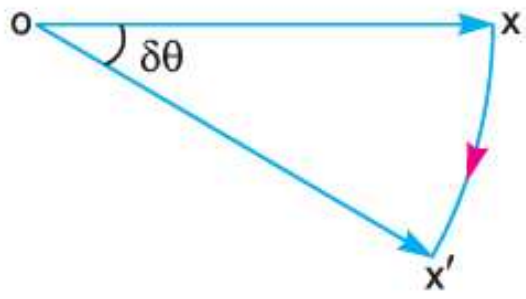

(b) Streeing to the right

Notes:-

1. When the ship steers to the right under similar conditions as discussed above, the effect of the reactive gyroscopic couple, as shown in Fig.(*b*), *will* be to **raise the stern and lower the bow.**
2. When the rotor rates in the anticlockwise direction, when viewed from the stern and the ship is steering to the left, then the effect of reactive gyroscopic couple will be to **lower the bow and raise the stern.**
3. When the ship is steering to the right under similar conditions as discussed in note 2 above, then the effect of reactive gyroscopic couple will be to **raise the bow and lower the stern.**
4. When the rotor rotates in the clockwise direction when viewed from the bow or fore end and the ship is steering to the left, then the effect of reactive gyroscopic couple will be to **raise the stern and lower the bow.**
5. When the ship is steering to the right under similar conditions as discussed in note 4 above, then the effect of reactive gyroscopic couple will be to **raise the bow and lower the stern.**

Atmiya University Rajkot

Effect of Gyroscopic Couple on a Naval Ship during Pitching

- Pitching is the movement of a complete ship up and down in a vertical plane about transverse axis, as shown in fig. (a).
- In this case, the transverse axis is the axis of precession.
- The pitching of the ship is assumed to take place with simple harmonic motion i.e. the motion of the axis of spin about transverse axis is simple harmonic.

Atmiya University Rajkot

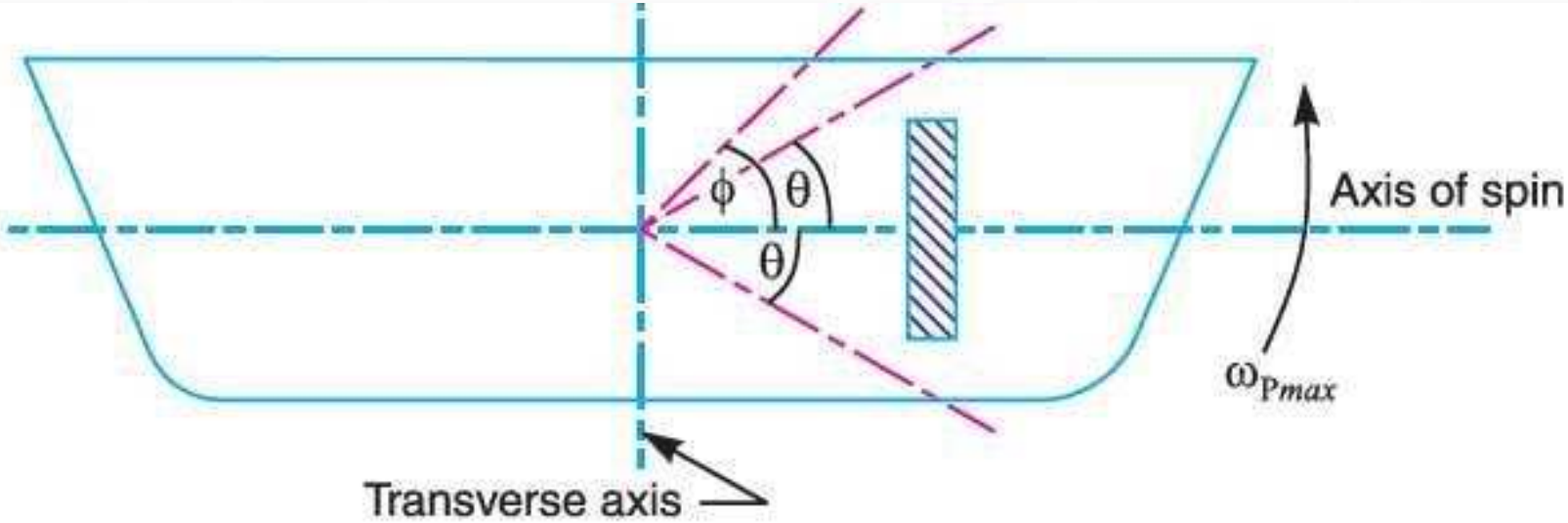

(*a*) Pitching of a naval ship

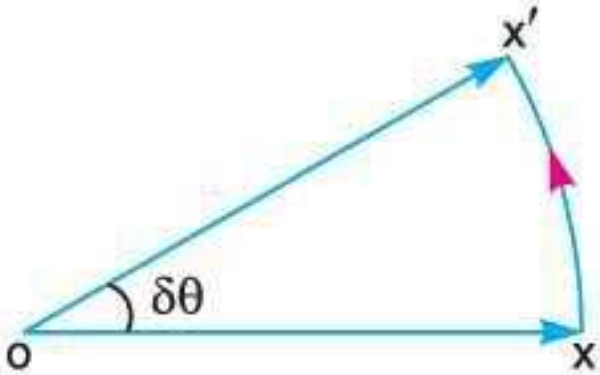

(*b*) Pitching upward

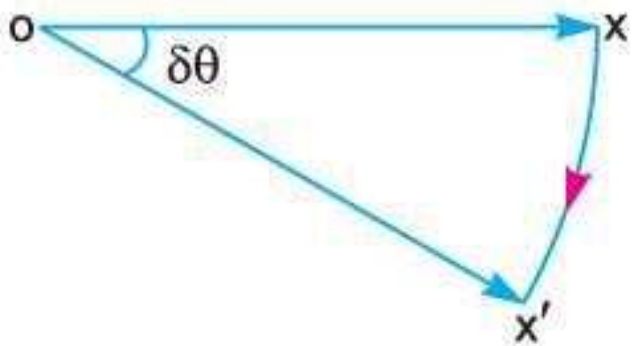

(*c*) Pitching downward

Atmiya University Rajkot

Fig:- Effect of gyroscopic couple on a naval ship during pitching

∴ Angular displacement of the axis of spin from mean position after time t seconds,

$$\theta = \phi \sin \omega_1 . t$$

where ϕ = Amplitude of swing *i.e.* maximum angle turned from the mean position in radians, and

ω_1 = Angular velocity of S.H.M.

$$= \frac{2\pi}{\text{Time period of S.H.M. in seconds}} = \frac{2\pi}{t_p} \text{ rad/s}$$

Angular velocity of precession,

$$\omega_P = \frac{d\theta}{dt} = \frac{d}{dt}(\phi \sin \omega_1 . t) = \phi \omega_1 \cos \omega_1 t$$

The angular velocity of precession will be maximum, if $\cos \omega_1 . t = 1$.

∴ Maximum angular velocity of precession,

$$\omega_{Pmax} = \phi . \omega_1 = \phi \times 2\pi / t_p \quad \text{...(Substituting } \cos \omega_1 . t = 1)$$

Let I = Moment of inertia of the rotor in kg-m^2, and

ω = Angular velocity of the rotor in rad/s.

∴ Mamimum gyroscopic couple,

$$C_{max} = I . \omega . \omega_{Pmax}$$

Atmiya University Rajkot

Effect of Gyroscopic Couple on a Naval Ship during Pitching

- When the pitching is **upward**, the effect of the reactive gyroscopic couple, as shown in fig.(b), will try to move the **ship towards star-board.**
- On the other hand, if the pitching is **downward**, the effect of the reactive gyroscopic couple, as shown in fig.(c), is to turn the **ship towards port side.**

Atmiya University Rajkot

Effect of Gyroscopic Couple on a Naval Ship during Rolling

- We know that, for the effect of gyroscopic couple to occur, the axis of precession should always be perpendicular to the axis of spin.
- If, however, the axis of precession becomes parallel to the axis of spin, there will be no effect of the gyroscopic couple acting on the body of the ship.
- In case of rolling of a ship, the axis of precession (i.e. longitudinal axis) is always parallel to the axis of spin for all positions.
- Hence,there is no effect of the gyroscopic couple acting on the body of a ship.

Atmiya University Rajkot

1. The turbine rotor of a ship has a mass of 8 tonnes and a radius of gyration 0.6 m. It rotates at 1800 r.p.m. clockwise, when looking from the stern. Determine the gyroscopic couple, if the ship travels at 100 km/hr and steer to the left in a curve of 75 m radius.

Solution. Given: $m = 8$ t $= 8000$ kg ; $k = 0.6$ m ; $N = 1800$ r.p.m. or $\omega = 2\pi \times 1800/60 = 188.5$ rad/s ; $v = 100$ km/h $= 27.8$ m/s ; $R = 75$ m

We know that mass moment of inertia of the rotor,

$$I = m.k^2 = 8000\,(0.6)^2 = 2880 \text{ kg-m}^2$$

and angular velocity of precession,

$$\omega_p = v / R = 27.8 / 75 = 0.37 \text{ rad/s}$$

We know that gyroscopic couple,

$$C = I.\omega.\omega_p = 2880 \times 188.5 \times 0.37 = 200\,866 \text{ N-m}$$

$$= 200.866 \text{ kN-m} \quad \text{Ans.}$$

Amity University Rajasthan

when the rotor rotates in clockwise direction when looking from the stern and the ship steers to the left, the effect of the reactive gyroscopic couple is to raise the bow and lower the stern.

2. The turbine rotor of a ship has a mass of 3500 kg. It has a radius of gyration of 0.45 m and a speed of 3000 r.p.m. clockwise when looking from stern. Determine the gyroscopic couple and its effect upon the ship:

1. when the ship is steering to the left on a curve of 100 m radius at a speed of 36 km/h.

2. when the ship is pitching in a simple harmonic motion, the bow falling with its maximum velocity. The period of pitching is 40 seconds and the total angular displacement between the two extreme positions of pitching is 12 degrees.

Atmiya University Rajkot

Solution. Given : $m = 3500$ kg ; $k = 0.45$ m; $N = 3000$ r.p.m. or $\omega = 2\pi \times 3000/60 = 314.2$ rad/s

1. *When the ship is steering to the left*

Given: $R = 100$ m ; $v = $ km/h $= 10$ m/s

We know that mass moment of inertia of the rotor,

$$I = m.k^2 = 3500\,(0.45)^2 = 708.75 \text{ kg-m}^2$$

and angular velocity of precession,

$$\omega_p = v/R = 10/100 = 0.1 \text{ rad/s}$$

∴ Gyroscopic couple,

$$C = I.\omega.\omega_p = 708.75 \times 314.2 \times 0.1 = 22\,270 \text{ N-m}$$

$$= 22.27 \text{ kN-m}$$ **Ans.**

When the rotor rotates clockwise when looking from the stern and the ship takes a left turn, the effect of the reactive gyroscopic couple is to raise the bow and lower the stern.

Atmiya University Rajkot

2. *When the ship is pitching with the bow falling*

Given: $t_p = 40$ s

Since the total angular displacement between the two extreme positions of pitching is 12° (*i.e.* $2\phi = 12°$), therefore amplitude of swing,

$$\phi = 12 / 2 = 6° = 6 \times \pi/180 = 0.105 \text{ rad}$$

and angular velocity of the simple harmonic motion,

$$\omega_1 = 2\pi / t_p = 2\pi / 40 = 0.157 \text{ rad/s}$$

We know that maximum angular velocity of precession,

$$\omega_P = \phi.\omega_1 = 0.105 \times 0.157 = 0.0165 \text{ rad/s}$$

∴ Gyroscopic couple,

$$C = I.\omega.\omega_P = 708.75 \times 314.2 \times 0.0165 = 3675 \text{ N-m}$$

$$= 3.675 \text{ kN-m}$$ Ans.

When the bow is falling (*i.e. when the pitching is downward),* the effect of the reactive gyroscopic couple is to move the ship towards port side.

Atmiya University Rajkot

3. The heavy turbine rotor of a sea vessel rotates at 1500 r.p.m. clockwise looking from the stern, its mass being 750 kg. The vessel pitches with an angular velocity of 1 rad/s. Determine the gyroscopic couple transmitted to the hull when bow is rising, if the radius of gyration for the rotor is 250 mm. Also show in what direction the couple acts on the hull?

Atmiya University Rajkot

Design of Flexible Machine Elements

Design of Transmission Systems (DTS)
(21BTMECC404)

Unit - I

Design of Flexible Machine Elements

Prepared By:- Shivang S. Jani

Asst. Professor

Mechanical Engineering Department

BELT & CHAIN DRIVES

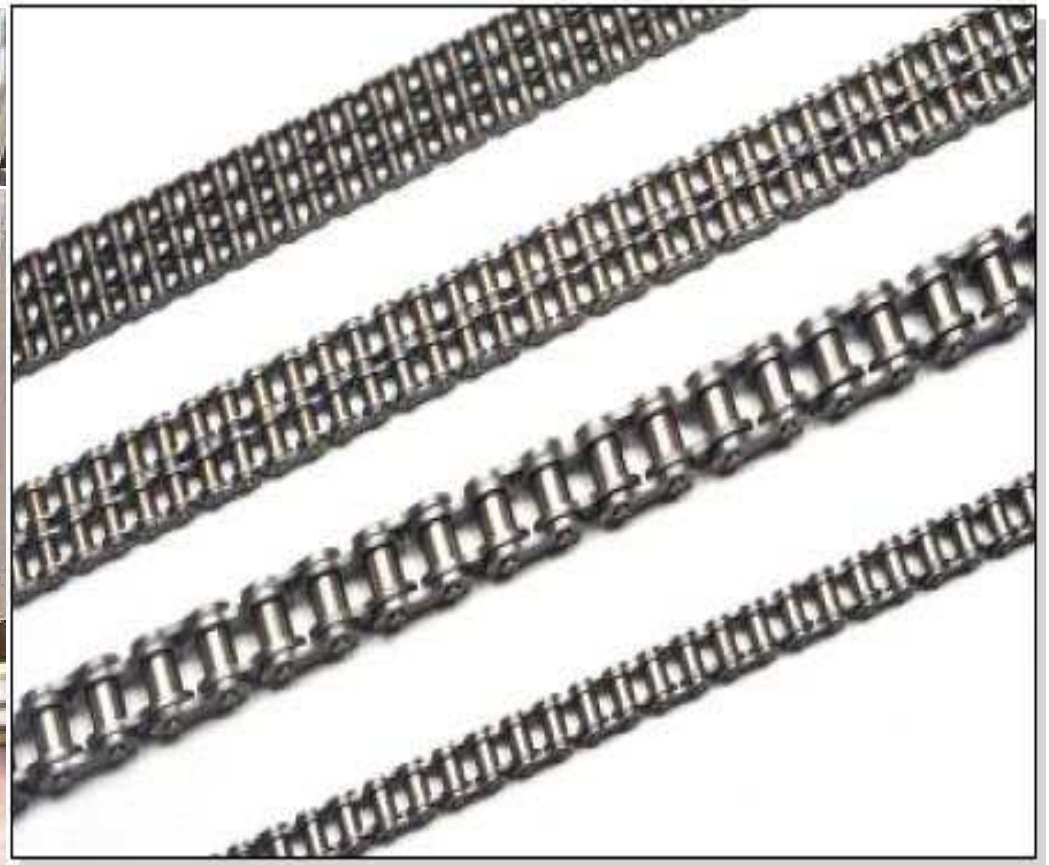

Atmiya University Rajkot

INTRODUCTION

The belts are used to transmit power from one shaft to another by means of pulleys which rotate at the same speed or at different speeds. The amount of power transmitted depends upon the following factors:

1. The velocity of the belt.
2. The tension under which the belt is placed on the pulleys.
3. The arc of contact between the belt and the smaller pulley.

Atmiya University Rajkot

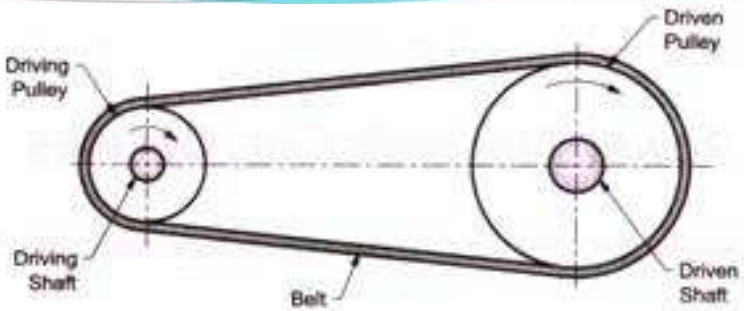

- The belts or ropes are used **to transmit** power from one shaft to another by means of pulleys which rotate at the same speed or at different speeds.
- The amount of power transmitted depends upon the **following** factors:

1. The velocity of the belt.
2. The tension under which the belt is placed on the pulley.
3. The arc of contact between the belt and the smaller pulley
4. The condition under which the belt is used.
5. The material of the belt used.

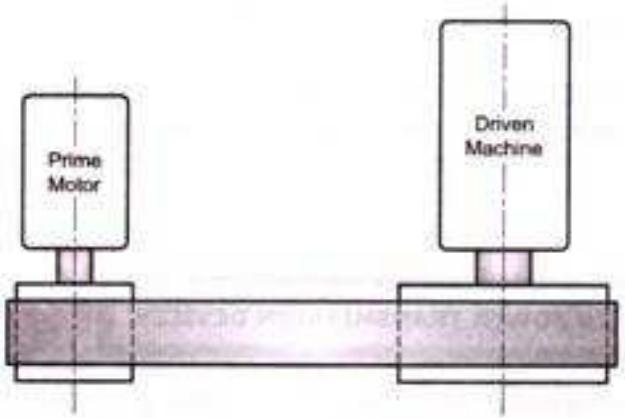

- **Selection of the Belt Drive**:

1. Speed of the driving and driven shafts.
2. Speed reduction ratio
3. Power to be transmitted
4. Centre distance between the shafts.
5. Positive drive requirements.
6. Shaft layout.
7. Space available.
8. Service conditions.

Atmiya University Rajkot

ADVANTAGES OF BELT DRIVE

- They are simple. They are economical.
- Parallel shafts are not required.
- Overload and jam protection are provided.
- Noise and vibration are damped out. Machinery life is prolonged because load fluctuations are cushioned (shock-absorbed).
- They are lubrication-free. They require only low maintenance.
- They are highly efficient (90–98%, usually 95%). Some misalignment is tolerable.
- They are very economical when shafts are separated by large distances.

Atmiya University Rajkot

DISADVANTAGES

- They occupy more space
- The velocity ratio is relatively small
- The velocity ratio is not constant

Atmiya University Rajkot

Desirable properties of materials used for belt

- High coefficient of friction
- High flexibility
- Durability
- High strength

<u>Materials :-</u>

- Leather
- Fabric or cotton belts
- Rubber
- Polyster or polyamide
- Balata belts(acid proof and water proof)

Atmiya University Rajkot

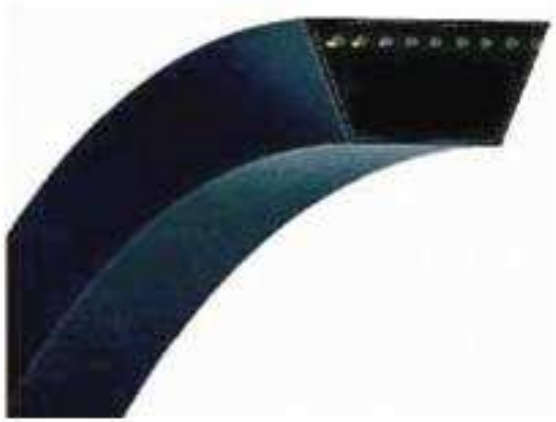

Validus Group Inc.

Atmiya University Rajkot

Types of Belt [According to Materials]

- **Leather Belt :** Leather belts are made from 1.2 m to 1.5 m long strip cut from either side of the back bone of the top grade steer hide.
  The leather may be oak- tanned and Chrome tanned. Leather belts are used in steam & oil condition.
  No. of layers: Single, Double, Triple ply belts.

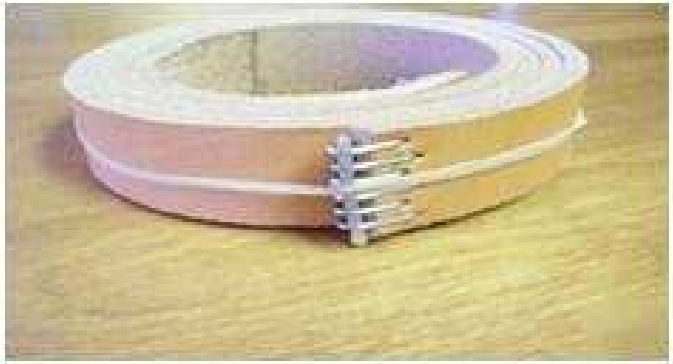

- **Rubber belt :** These are made from layers of fabric impregnated with rubber composition. They can not withstand in hot, oily and greasy conditions. They are very flexible and can be made endless. They are used in saw mills, paper mills etc.

- **Cotton or fabric belt :** These belts are made from folding canvas or cotton duck. They are impregnated with linseed oil to make water proof. They are suitable in warm climates, in damp atmosphere. They are used in form machinery, belt conveyor etc. i.e. Flooring mills

Atmiya University Rajkot

TYPES OF BELT DRIVES

- **Light Drives**: **Used to transmit small powers at belt speeds up to about 10 m/s in agricultural machines and small machine tools.**

Atmiya University
Rajkot

- **Medium Drives**: Used to transmit medium power at belt speeds over 10 m/s but up to 22 m/s as in machine tools.

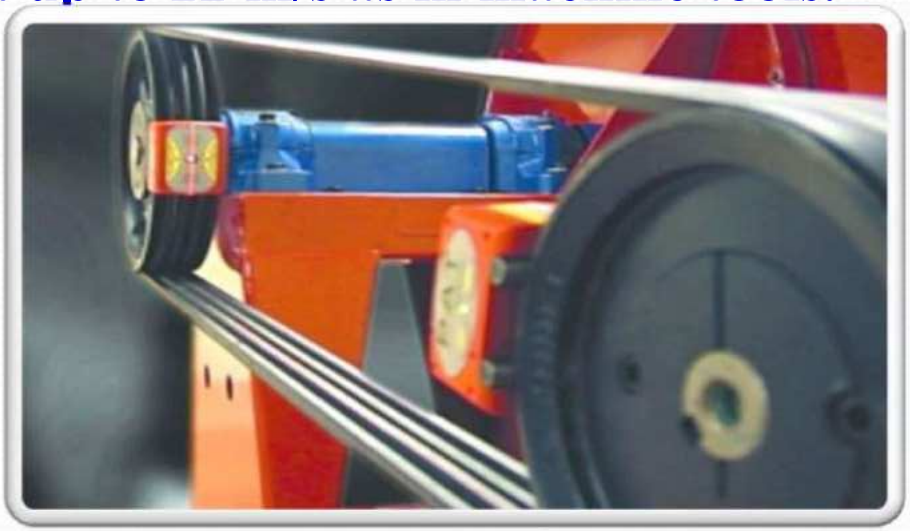

- **Heavy Drives**: Used to transmit large powers at belt speed above 22 m/s as in compressor & generators.

TYPES OF BELTS

Types of Belt [According to Shape]

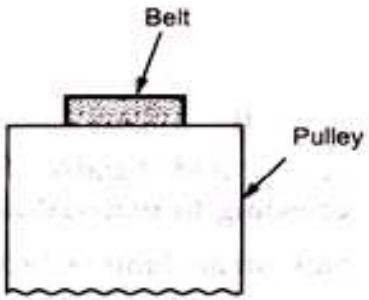

- **Flat Belt** : used in factories and workshops, where a moderate amount of power is to be transmitted, from one pulley to another when two pulleys are not more than 8 m apart.

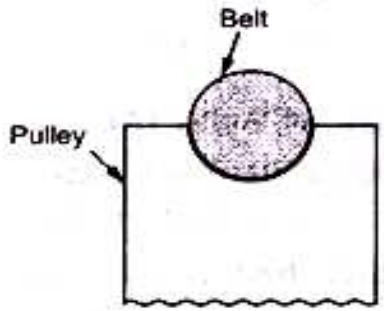

- **Circular or Rope Belt** : used in factories and workshops, where a greater amount of power is to be transmitted, from one pulley to another when two pulleys are not more than 8 m apart. e.g. Crane

- **V-Belt** : used in factories and workshops, where a moderate amount of power is to be transmitted, from one pulley to another when two pulleys are very near to each other.

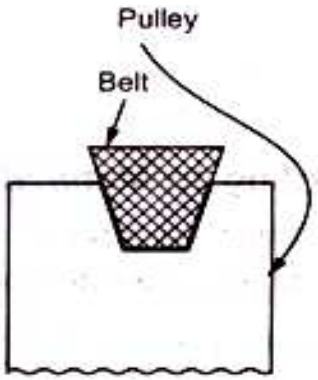

- **Timing Belt** : They are toothed belts which transmit power by means of teeth rather than friction. Hence there is no slip occurring in these types of belts. They need toothed wheels. e.g. CNC m/c, Automobiles

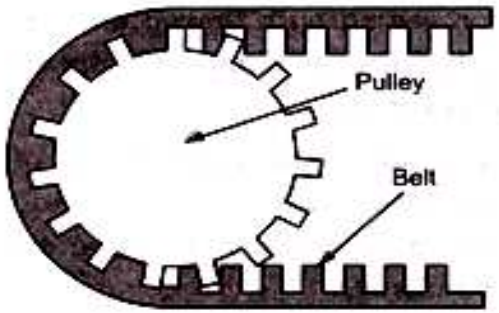

Atmiya University Rajkot

1. *Flat belt* : The flat belt is mostly used in the factories and workshops, where a moderate amount of power is to be transmitted, from one pulley to another when the two pulleys are not more than 8 meters apart.

2. *V-belt* : The V-belt is mostly used in the factories and workshops, where a moderate amount of power is to be transmitted, from one pulley to another, when the two pulleys are very near to each other.

3. *Circular belt or rope* : The circular belt or rope is mostly used in the factories and workshops, where a great amount of power is to be transmitted, from one pulley to another, when the two pulleys are more than 8 meters apart.

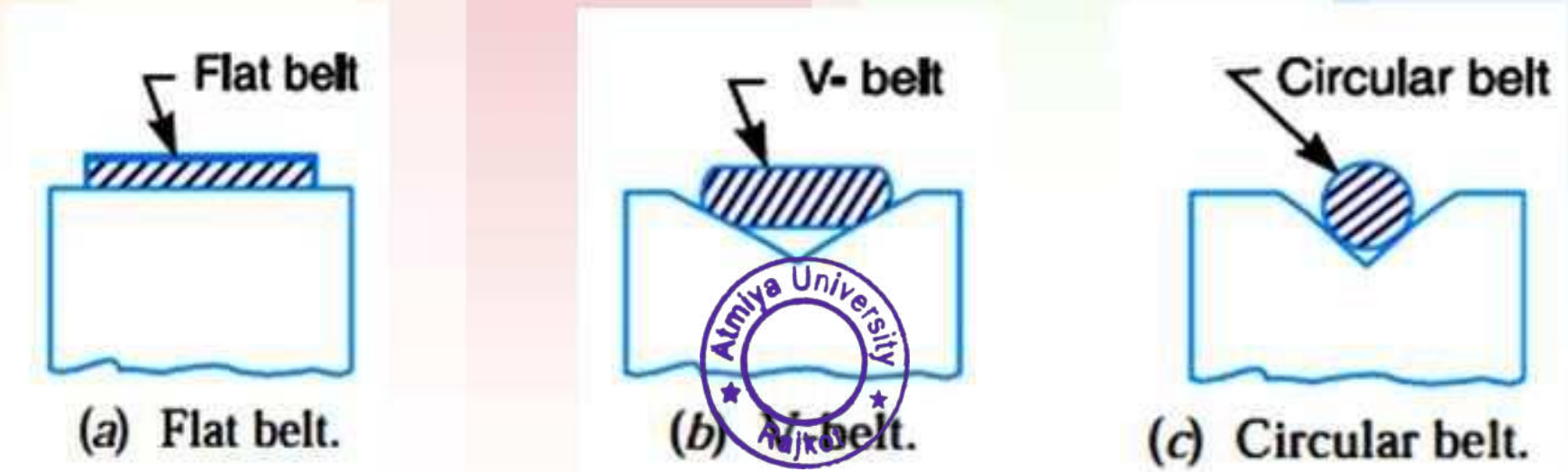

(a) Flat belt. (b) V-belt. (c) Circular belt.

FLAT BELT

V BELT

Atmiya University Rajkot

Types of Flat Belt Drives

Atmiya University Rajkot

Sr.No.	Factor	Flat Belt	Vee Belt
1.	Cross sectional area	Rectangular	Trapezoidal
2.	Area of application	They are used when the two pulleys are not more than 8 m apart.	They are used when the two pulleys are 2 - 3 m apart.
3.	Efficiency	Low (due to slippage) as compared to Vee Belt	More as compared to Flat Belt
4.	Joint	They have a joint	They are endless
5.	Construction of pulley	Simple	Complicated
6.	Cost	Cheaper	Costlier
7.	Precise alignment	Not required	Required
8.	Constant velocity ratio	Can not be obtained	Can be obtained
9.	Power transmitting capacity	Less as compared to Vee Belt	More as compared to Flat Belt
10.	Speed reduction ratio	Less	More
11.	Operation	Noisy as compared to Vee Belt	Quiet as compared to Flat Belt

Atmiya University Rajkot

OPEN BELT DRIVE

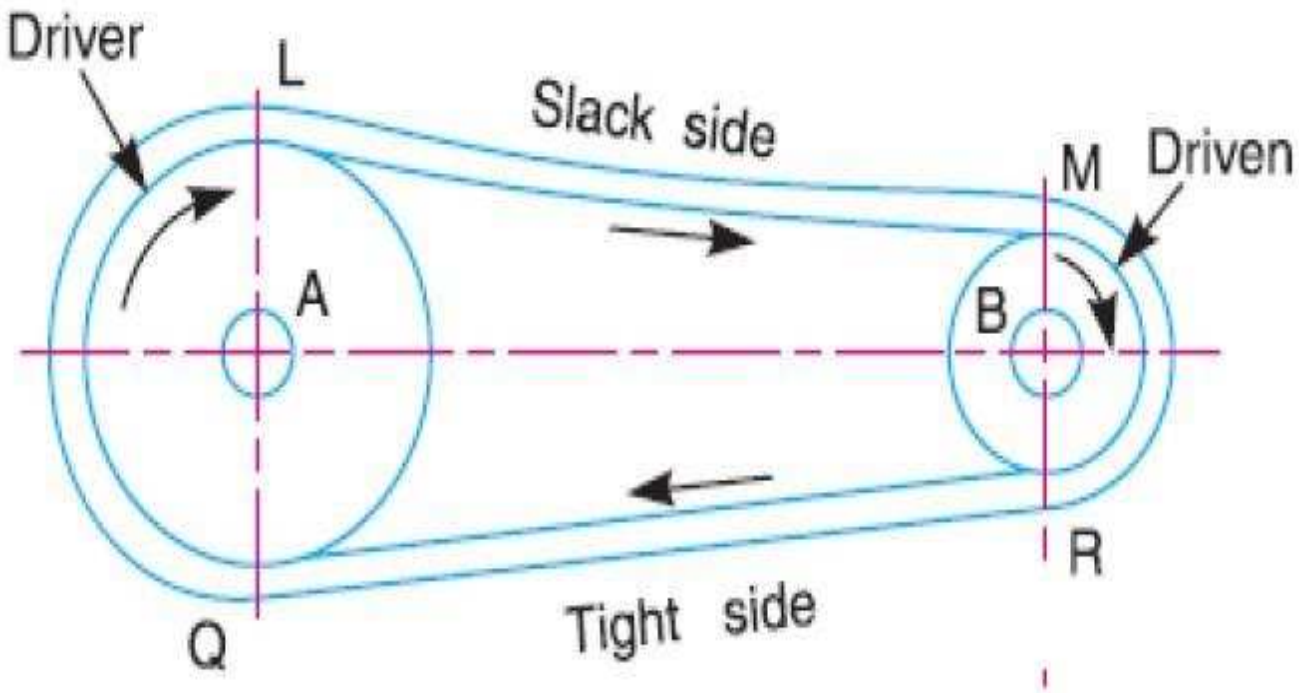

Fig. 4.2 Open belt drive

- An open belt drive is used when the driven pulley is desired rotate in the same direction.
- Generally the centre distance for open belt drive is 14 – 16 m. if the distance is too large, the belt whips i.e. vibrates in a direction perpendicular to the direction of motion.
- For very shorter distance, the belt slips increase.

Atmiya University Rajkot

- While transmitting power, one side of the belt is more tightened (known as tight side) as compared to other (known as slack side).
- In case of horizontal drives, it is always desired that the tight side is at the lower side of two pulleys. This is because the sag of the belt will be more on the upper side than the lower side. This is slightly increase the angle of wrap of the belts on the two pulleys than if the belt had been perfectly straight between the pulleys.
- In case the tight side is on the upper side, the sag will be greater at the lower side, reducing the angle of wrap and slip could occur earlier. This ultimately affects the power to be transmitted.

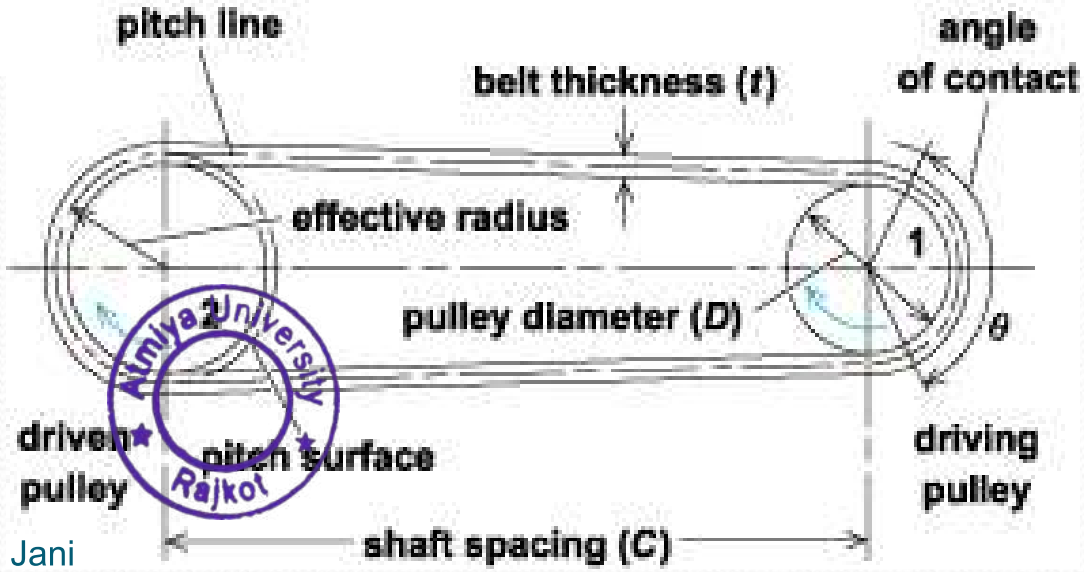

Atmiya University Rajkot

CROSS BELT DRIVE

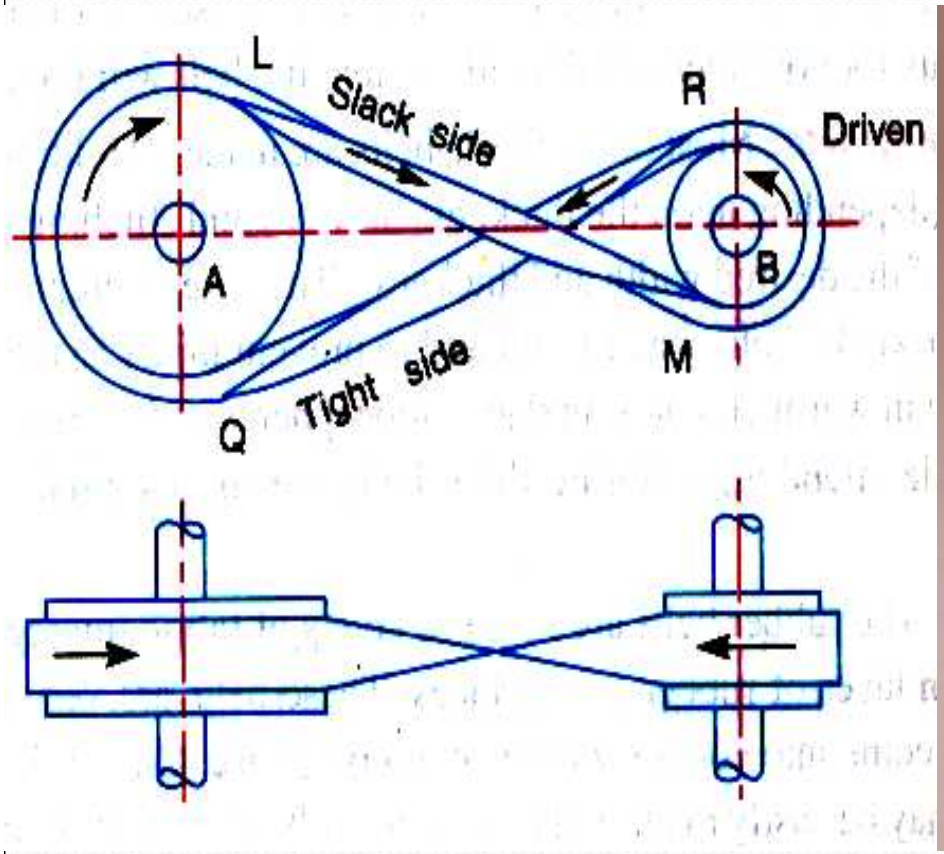

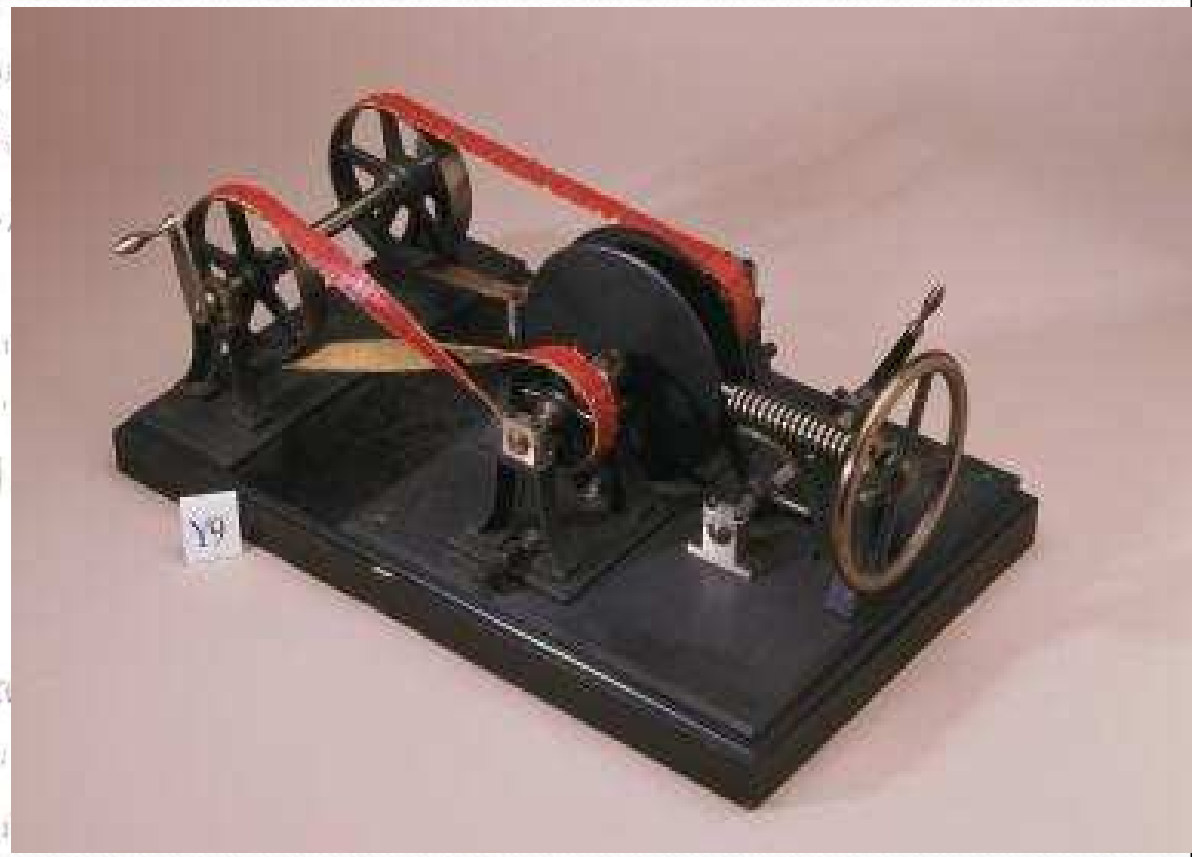

Atmiya University Rajkot

Cont.

- A crossed belt drive is used when the driven pulley is to be rotated in the opposite direction to that of the driving pulley.
- A crossed belt drive can transmit more power than an open belt drive as the angle of wrap is more.
- However the belt has to bend in two different planes and it wears out more. To avoid this the shaft should be placed at a max dist. 20 b where b = width of belt and speed should be less than 15 m /sec.

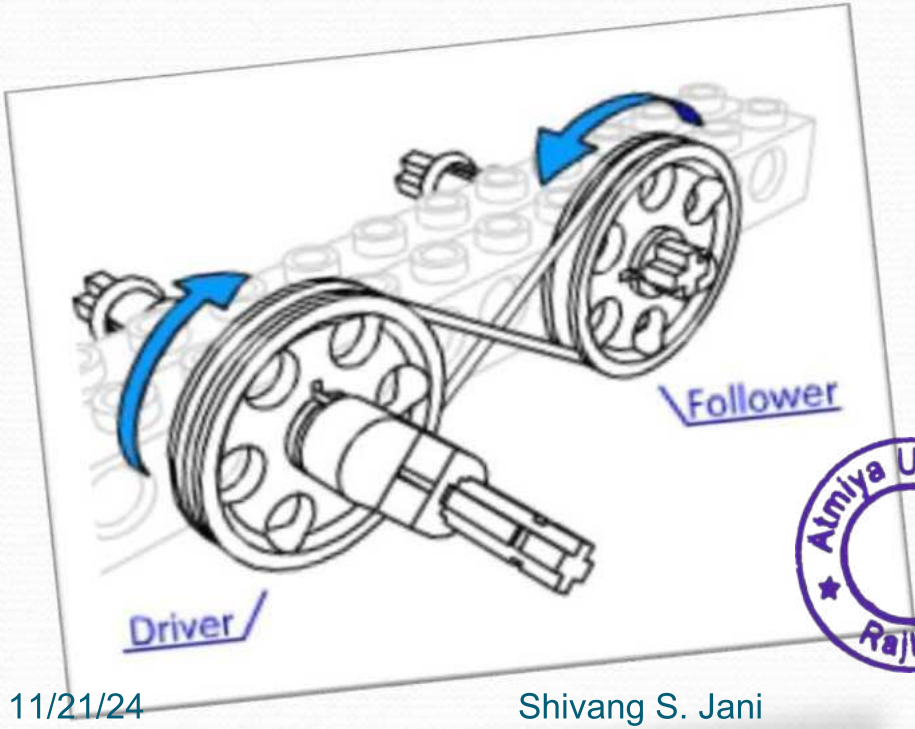

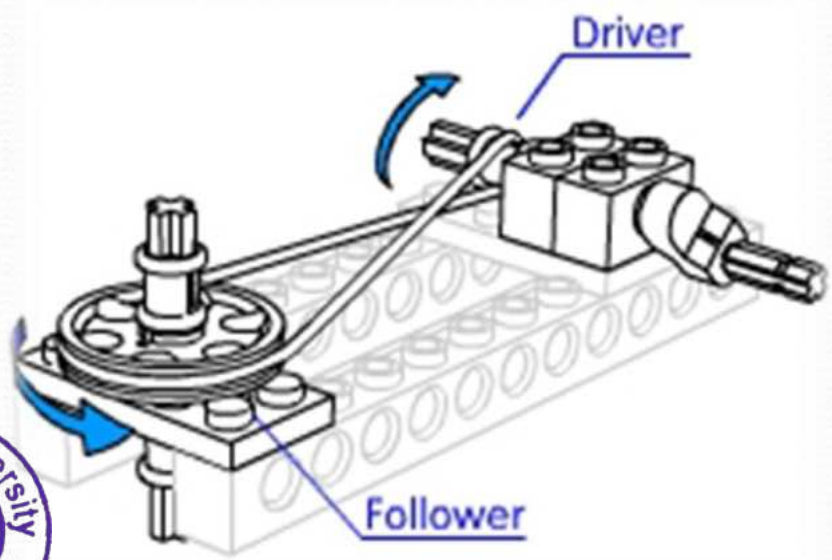

Atmiya University Rajkot

QUARTER TURN BELT DRIVE

- The quarter turn drive always known as right angle belt drive, is used with shafts arranged at right angles and rotating in one definite direction.
- In order to prevent the belt from leaving the pulley, the width of the face of the pulley should be greater or equal to 1.4 b, where b- is the width of the belt.
- when the reversible motion is desired, then a quarter turn belt drive with guide pulley.

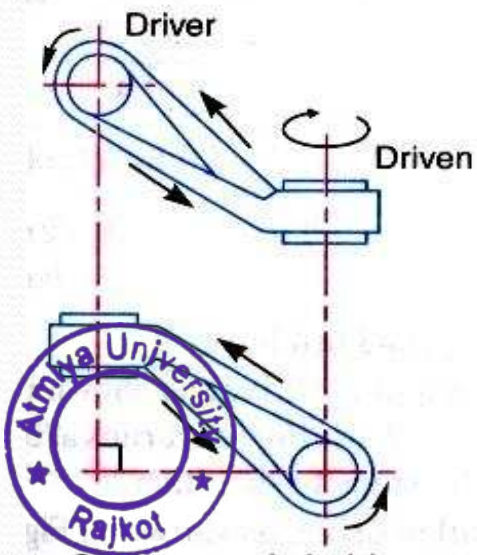

Quarter turn belt drive.

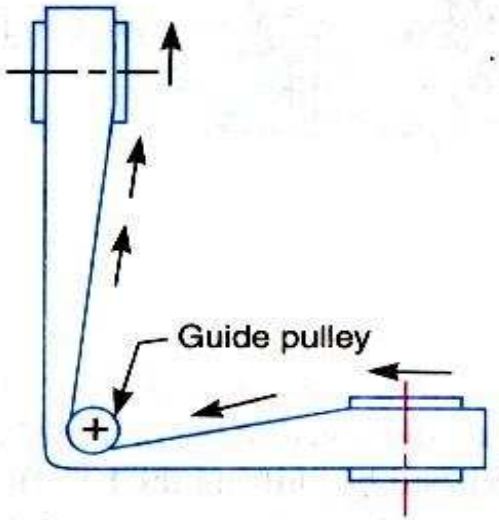

Quarter turn belt drive with guide pulley.

Atmiya University Rajkot

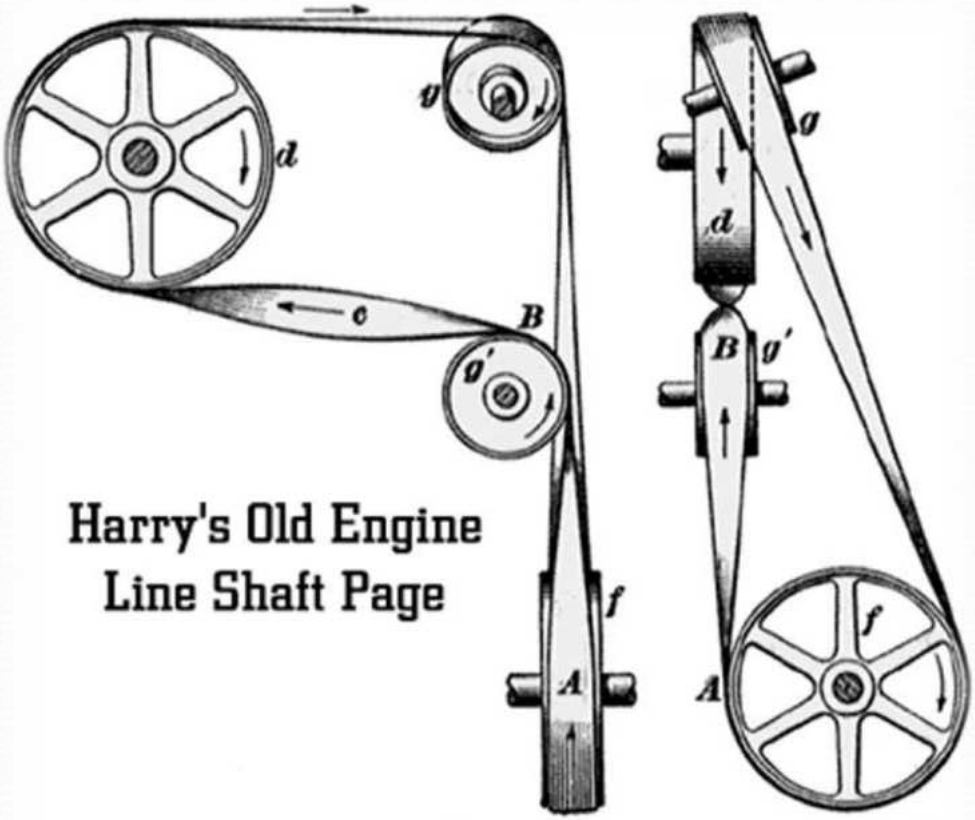

FIG. 22

Atmiya University
Rajkot

BELT DRIVE WITH IDLER PULLEY

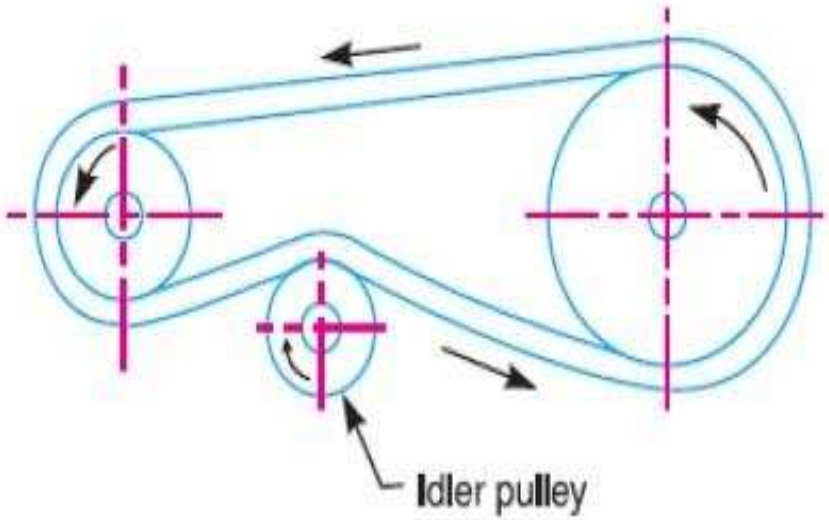

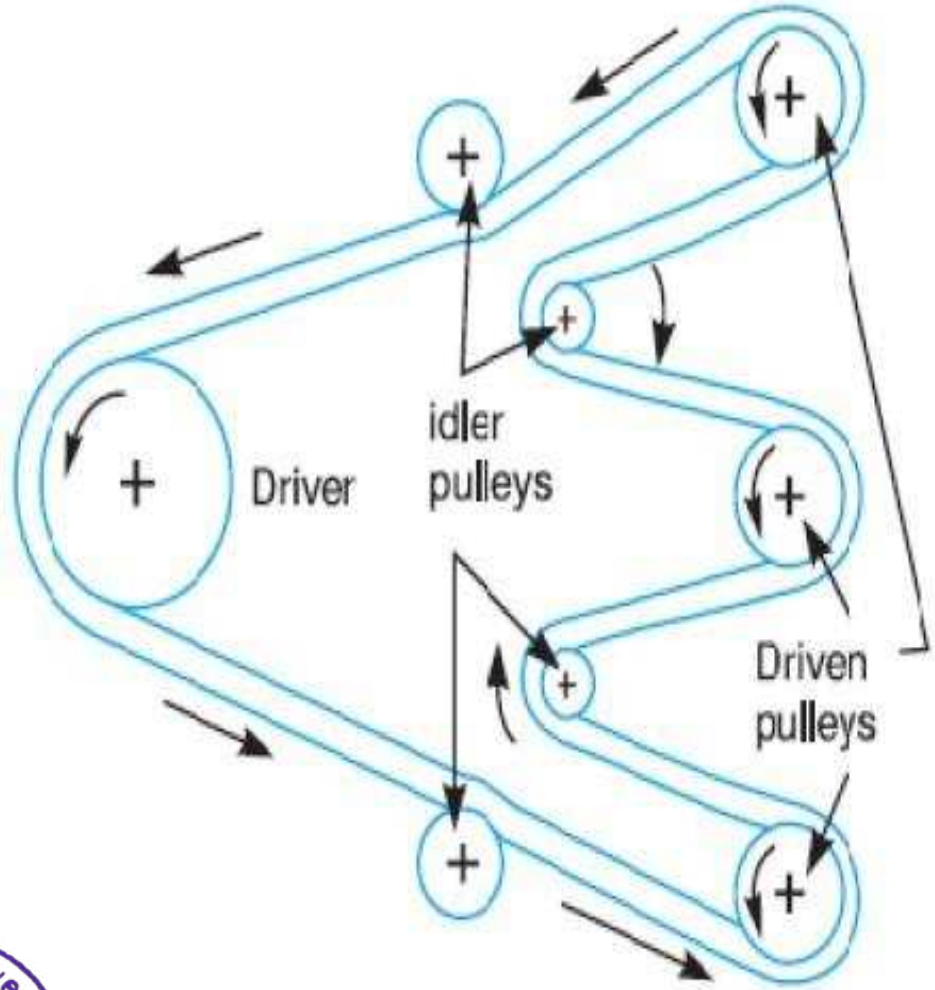

Atmiya University
Rajkot

- A belt drive with an idler pulley, used with shafts arranged in parallel and when an open belt drive can not be used due to small angle of contact on the smaller pulley.
- This type of drive is provided to obtain in high velocity ratio and when the required belt tension cannot be obtained by other means.
- When it is desired to transmit motion from one shaft to several shafts, all arranged in parallel, a belt drive with many idler pulleys can be employed.
- In conveyer system to avoid slackness of the belt, idler pulleys are used

Atmiya University Rajkot

- With constant use the belt is permanently stretched in a little length. This reduces the initial tension in the belt leading to lower power transmission capacity. However the tension in the belt can be restored to the original value by using an arrangement shown in figure.
- A bell – crank lever, hinged on the axis of the smaller pulley, supports adjustable weights on its one arm and the axis of a pulley on the other. The pulley is free to rotate on tis axis and is known as idler pulley. Owing to weights on one arm of the lever, the pulley exerts pressure on the belt increasing the tension and the angle of contact. Thus, life of the belt is increased and the power capacity is restore to original value.
- Motion of one shaft can be transmitted to two or more than two shafts by using a number of idler pulley (figure).

Atmiya University Rajkot

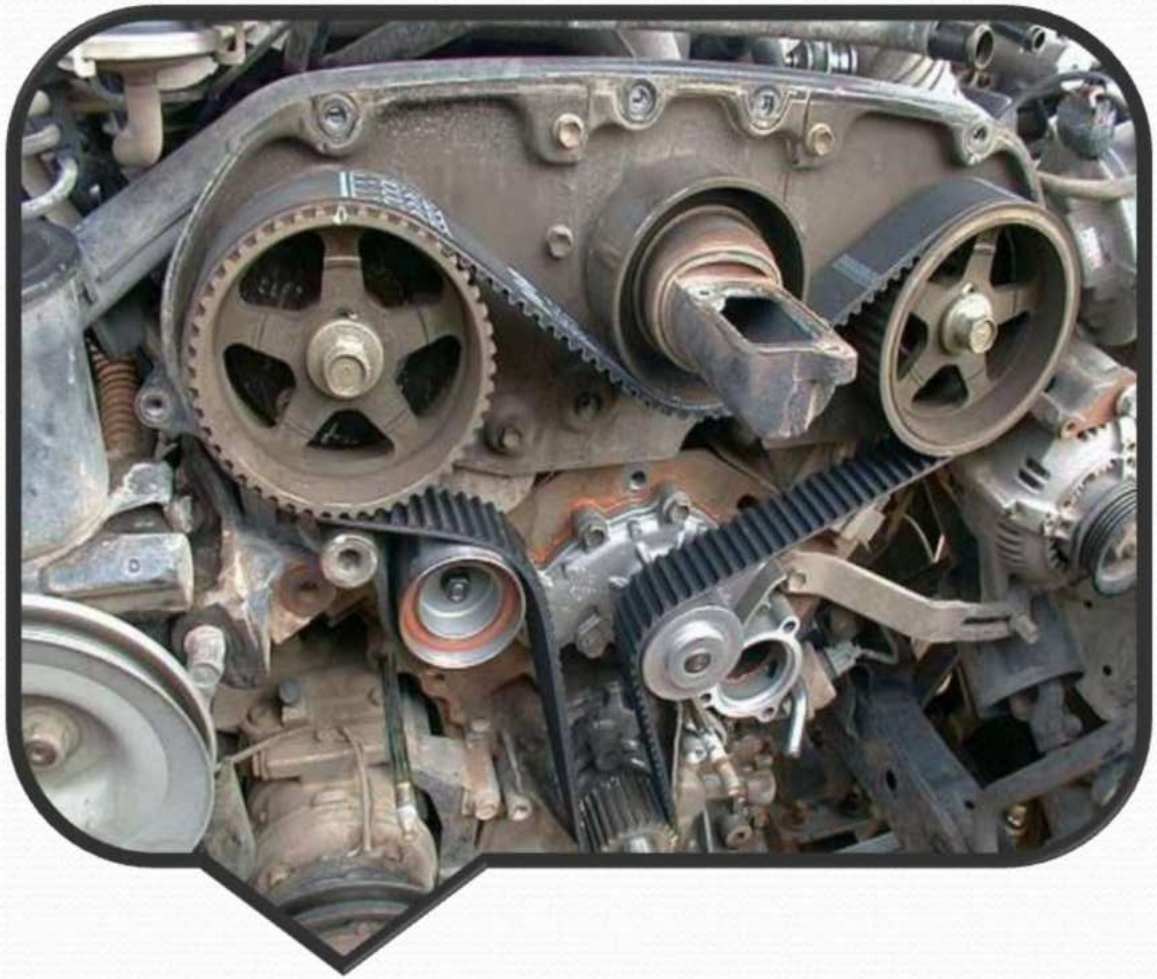

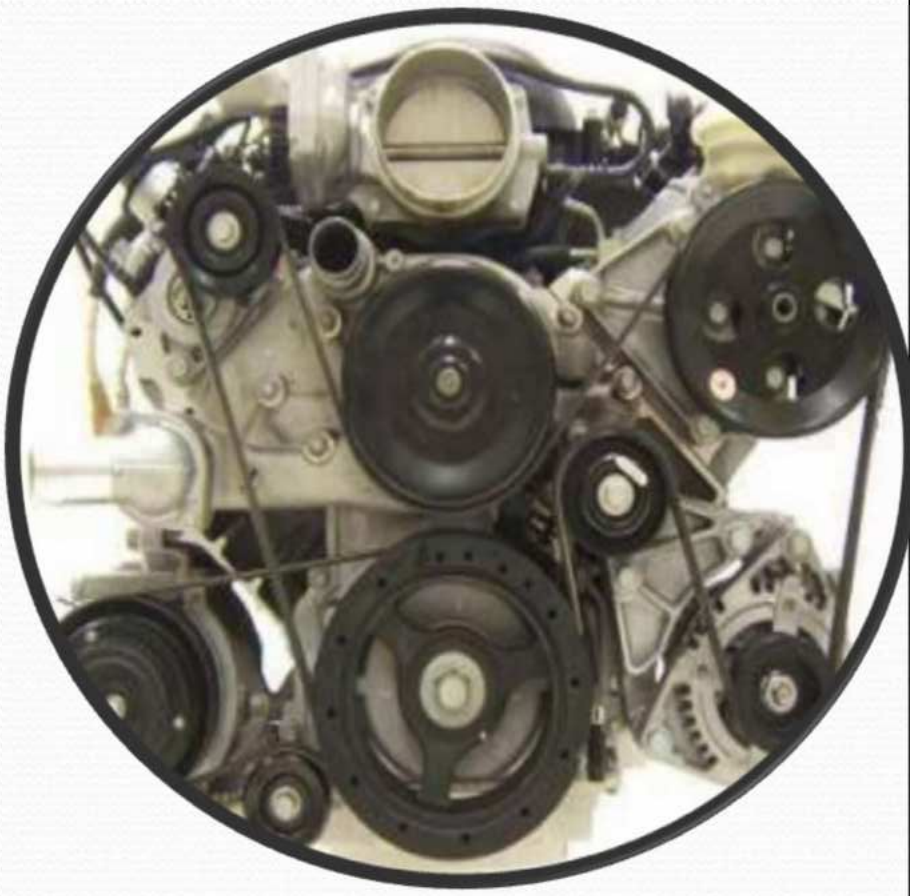

Atmiya University
Rajkot

COMPOUND BELT DRIVE

- It is used to transmit power from one shaft to another through a number of pulleys.

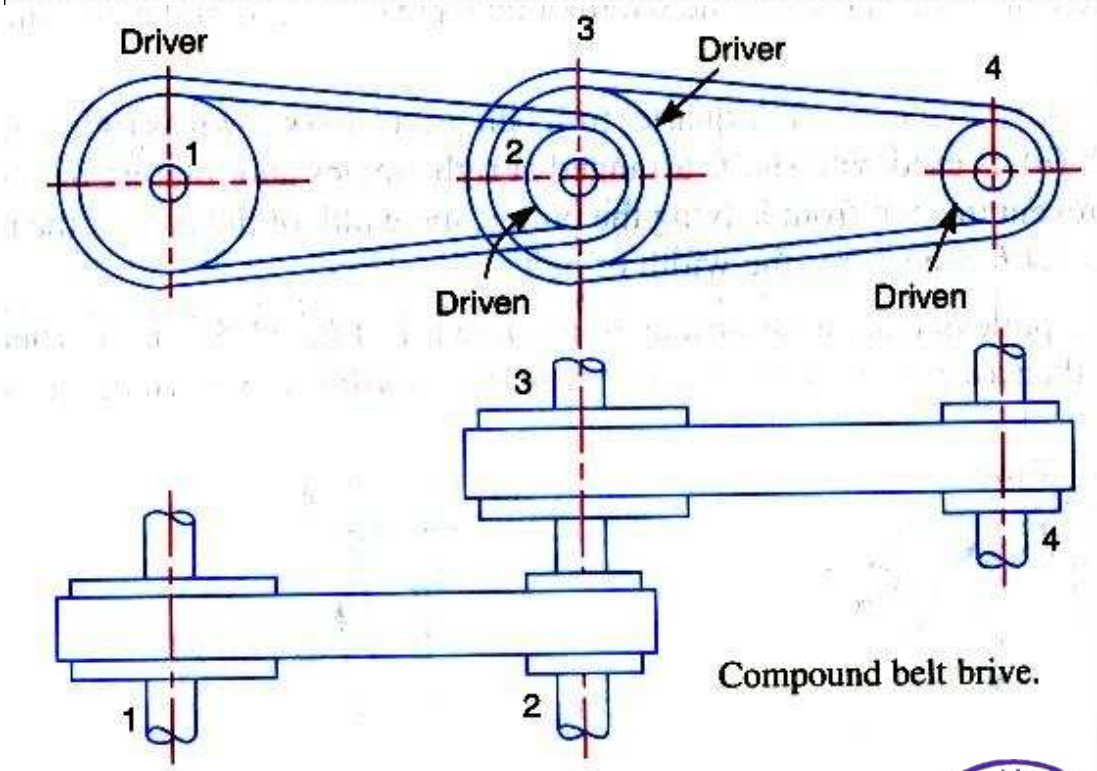

Compound belt brive.

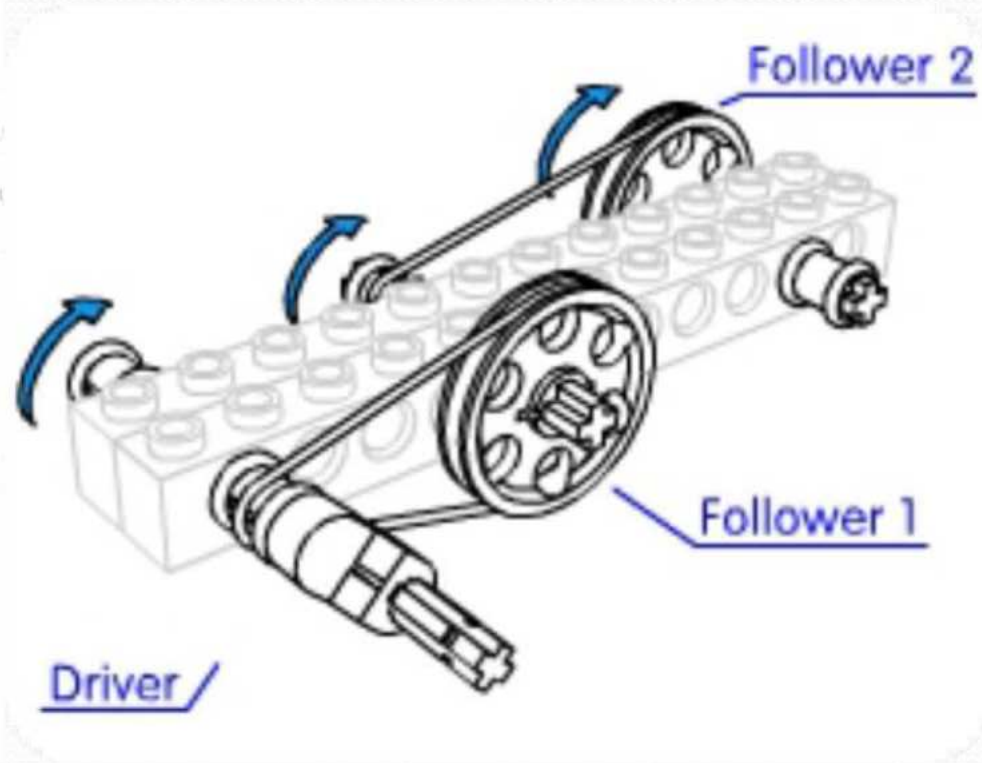

Atmiya University Rajkot

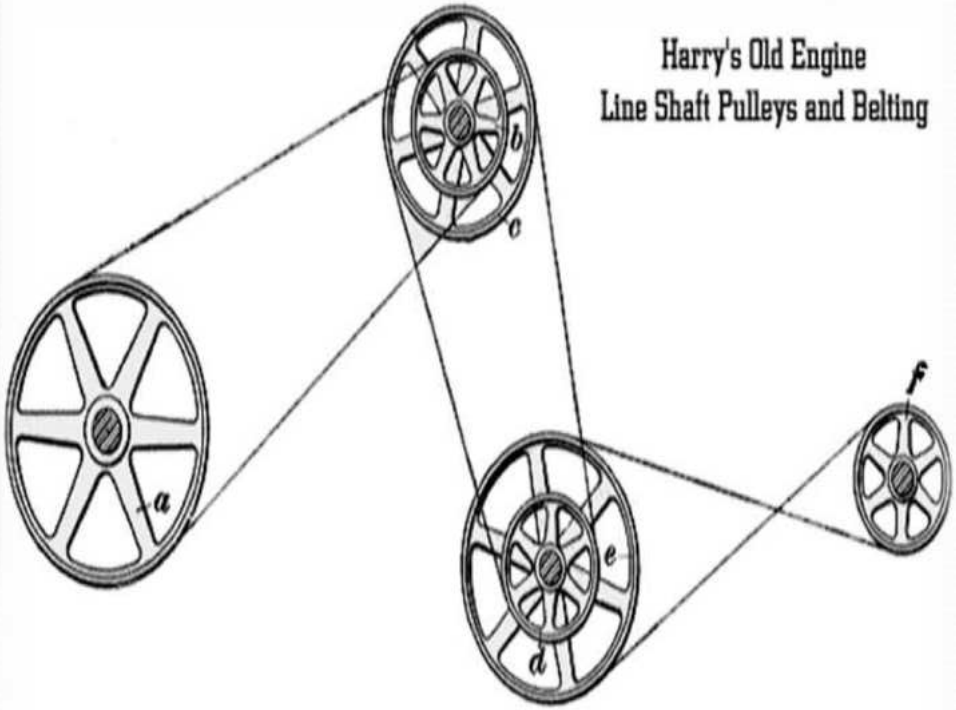

FIG. 2

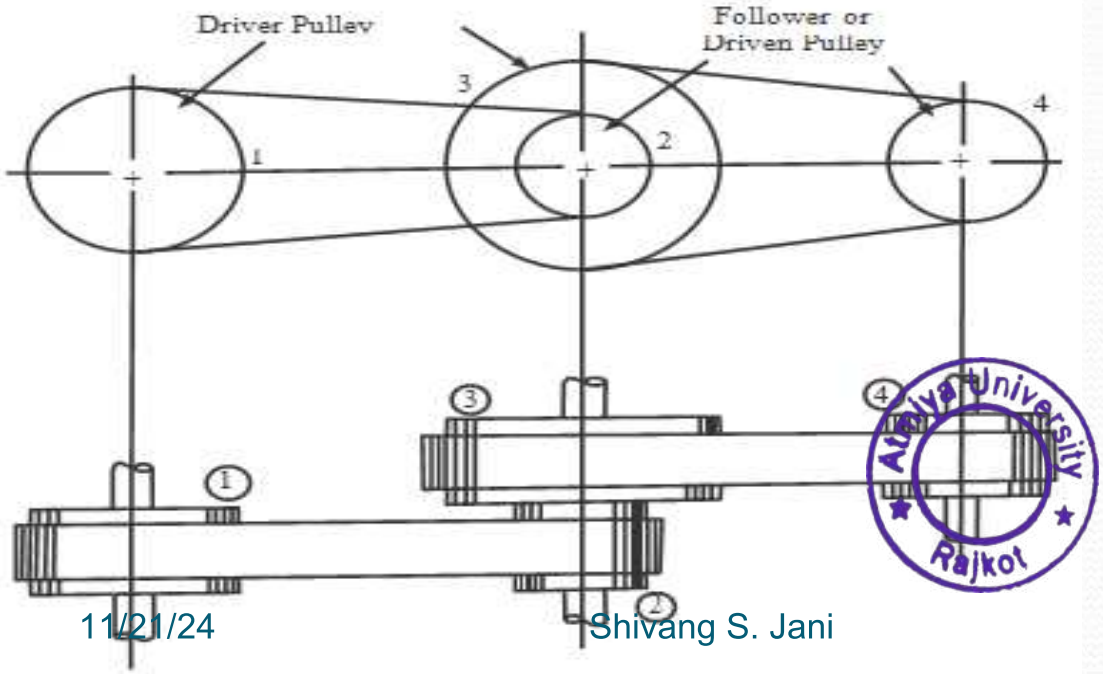

Atmiya University
Rajkot

STEPPED OR CONE PULLEY DRIVE

- A stepped or cone pulley drive, used for changing the speed of the driven shaft while the main or driving shaft runs at constant speed. This is accomplished by shifting the belt from one part of the steps to the another.

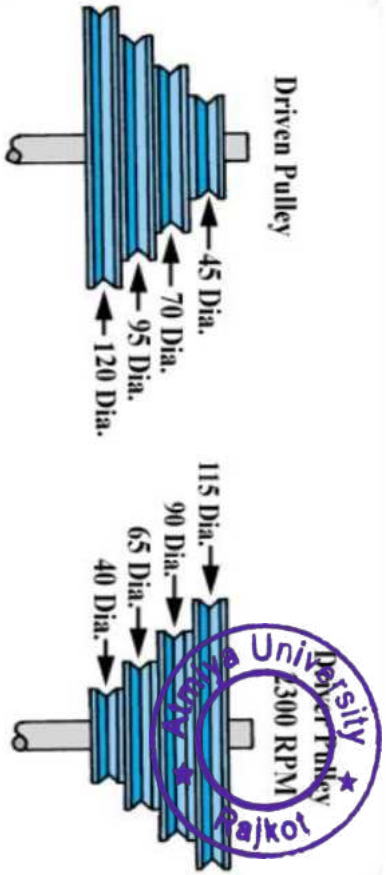

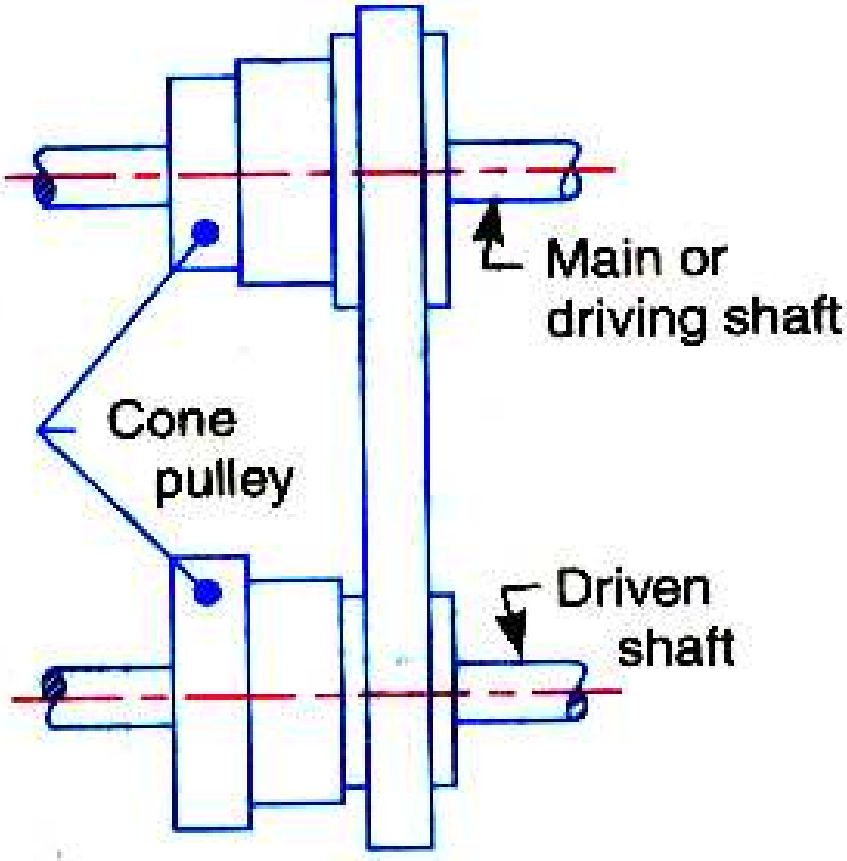

Stepped or cone pulley drive.

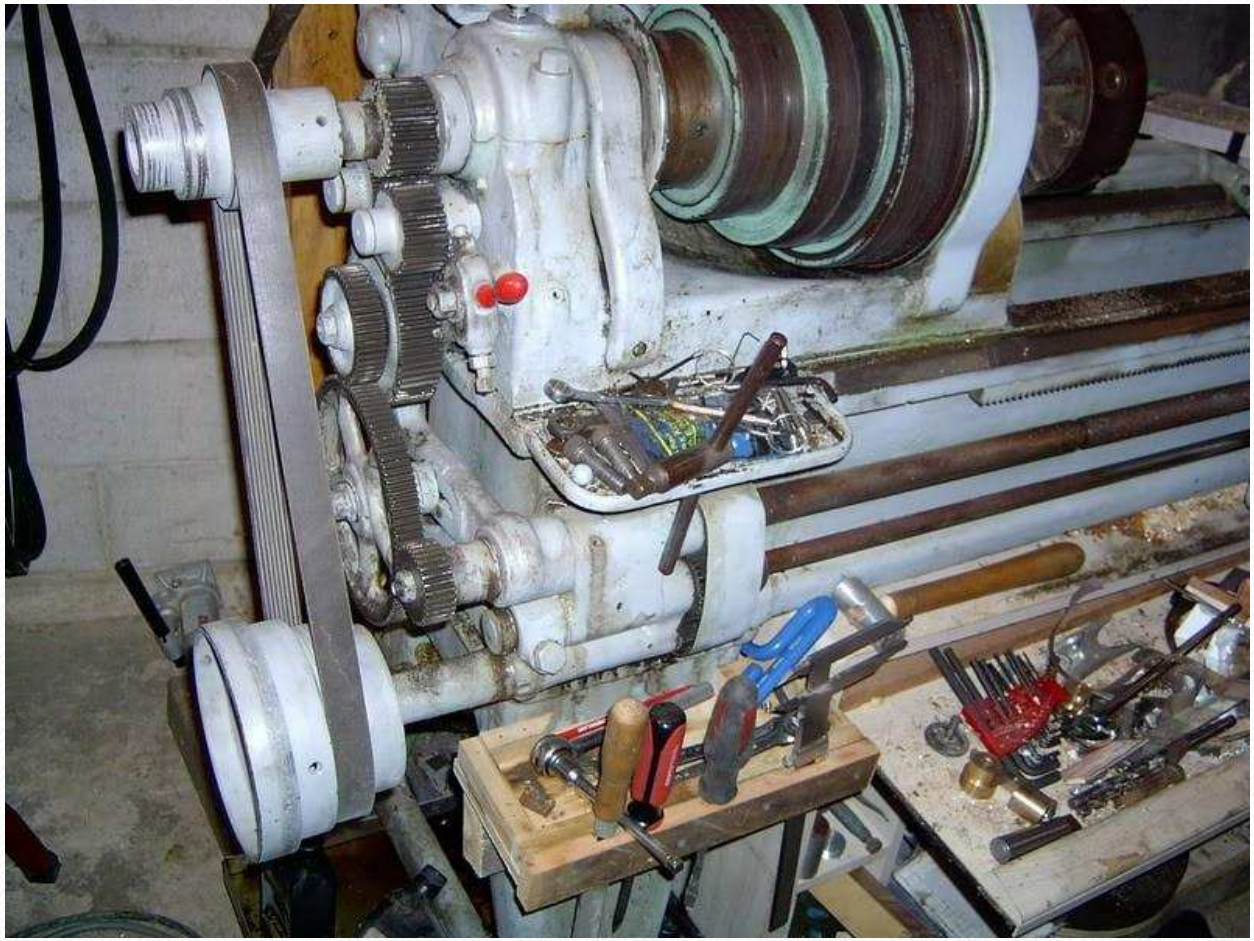

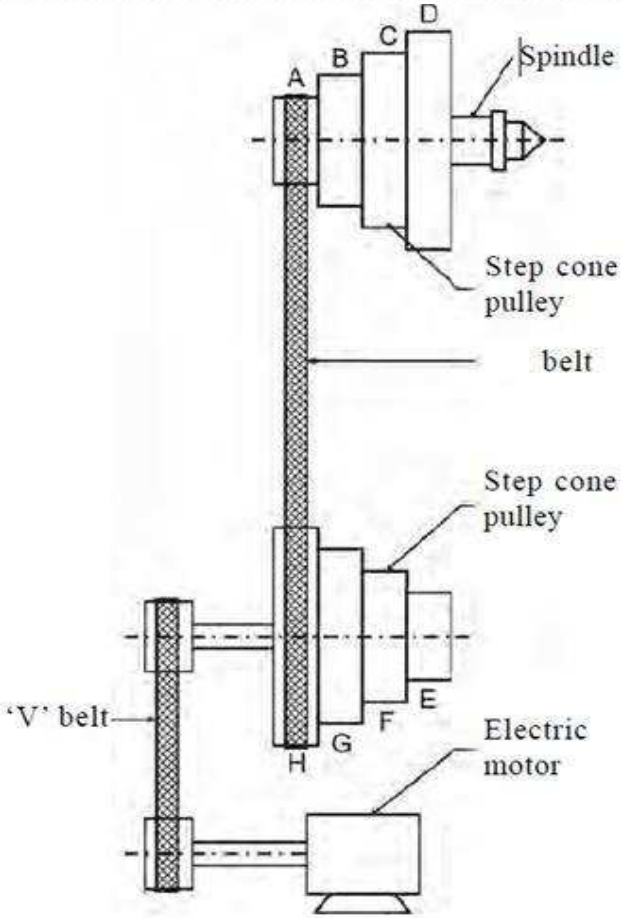
A
B
C
D
Spindle
Step cone pulley
belt
Step cone pulley
'V' belt
E
F
G
H
Electric motor

FAST & LOOSE PULLEY DRIVE

- A fast and loose pulley drive is used when the driven shaft is to be stopped or started whenever desired without stopping the driving shaft.
- One pulley is mounted on the driving shaft and two pulleys are mounted on driven shaft.
- A pulley which is keyed to the driven shaft is called fast pulley and is responsible for transmitting the power from the belt to the driven shaft.
- A pulley which is free to rotate over the driven shaft is called the loose pulley and is not capable of transmitting any power from the belt to the driven shaft.

Atmiya University Rajkot

- When the driven shaft is to be stopped, the belt is pushed on the loose pulley by means of shifting fork.

Atmiya University Rajkot

FAST & LOOSE PULLEY DRIVE

- Fast and loose pulley drive, is used when the driven or machine shaft is to be started or stopped when ever desired without interfering with the driving shaft.
- A pulley which is keyed to the machine shaft is called *fast pulley* and runs at the same speed as that of machine shaft.
- A loose pulley runs freely over the machine shaft and is incapable of transmitting any power.

– Many times, it is required to drive several machines from a single main shaft. In such a case, some arrangement to link or delink a machine to or from the main shaft has to be incorporated as all the machines may not be operating simultaneously. The arrangement usually provides that of using a loose pulley along with a fast pulley.

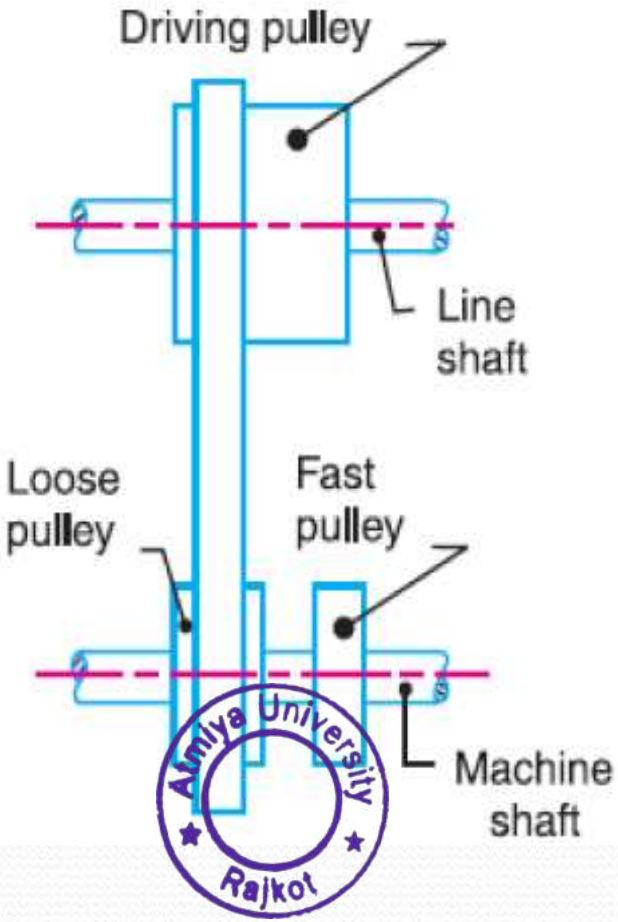

Atmiya University Rajkot

- A fast pulley is keyed to the shaft and rotates with it at the same speed and thus transmits power.
- A loose pulley is not keyed to the shaft and thus is unable to transmit any power.
- Whenever, a machine is to be driven, the belt is mounted on the fast pulley and when it is not required to transmit any power, the belt is pushed to the loose pulley placed adjacent to the fast pulley.

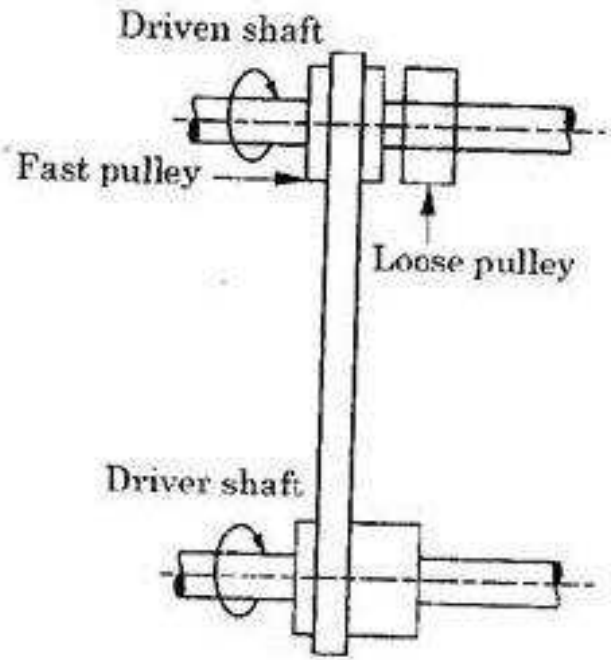

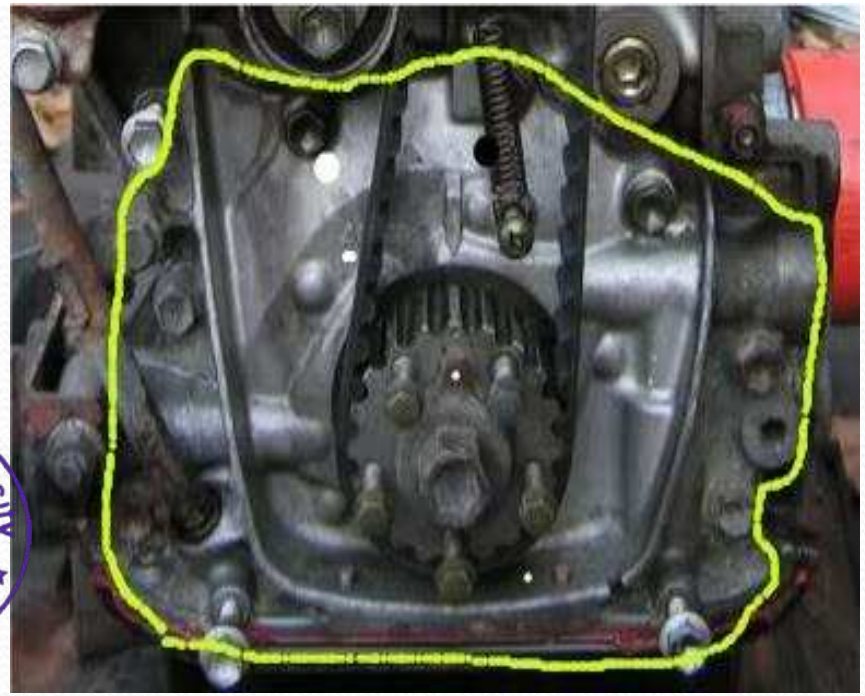

Atmiya University Rajkot

VELOCITY RATIO OF BELT DRIVE

It is the **ratio between the velocities of the driver and the follower or driven.**

It may be expressed, mathematically, as discussed below:

Let $d1$ = Diameter of the driver,

$d2$ = Diameter of the follower,

$N1$ = Speed of the driver in r.p.m., and

$N2$ = Speed of the follower in r.p.m.

Length of the belt that passes over the driver, in one minute = $\pi\, d1 . N1$

Similarly, length of the belt that passes over the follower,

in one minute = $\pi\, d2 . N2$

Since the length of belt that passes over the driver in one minute is equal to the length of belt that passes over the follower in one minute,

therefore $\pi\, d1 . N1 = \pi\, d2 . N2$

Atmiya University Rajkot

It is the ratio between the velocities of the driver and the follower or driven. It may be expressed, mathematically, as discussed below:

Let d_1 = Diameter of the driver,

d_2 = Diameter of the follower,

N_1 = Speed of the driver in r.p.m.,

N_2 = Speed of the follower in r.p.m.,

$\therefore$ Length of the belt that passes over the driver, in one minute

$$= \pi d_1 N_1$$

Similarly, length of the belt that passes over the follower, in one minute

$$= \pi d_2 N_2$$

Since the length of belt that passes over the driver in one minute is equal to the length of belt that passes over the follower in one minute, therefore

$$\because \quad \pi d_1 N_1 = \pi d_2 N_2$$

and velocity ratio, $$\frac{N_2}{N_1} = \frac{d_1}{d_2}$$

When thickness of the belt (t) is considered, then velocity ratio,

$$\frac{N_2}{N_1} = \frac{d_1 + t}{d_2 + t}$$

Atmiya University Rajkot

Slip of Belt

- The motion of belts and pulleys assuming a firm frictional grip between the belts and the pulleys. But sometimes, the frictional grip becomes insufficient.
- This may cause some forward motion of the driver without carrying the belt with it. This is called ***slip of the belt and is generally expressed as a percentage.***

Let s_1 % = Slip between the driver and the belt, and

s_2 % = Slip between the belt and the follower.

∴ Velocity of the belt passing over the driver per second

$$v = \frac{\pi d_1 . N_1}{60} - \frac{\pi d_1 . N_1}{60} \times \frac{s_1}{100} = \frac{\pi d_1 . N_1}{60}\left(1 - \frac{s_1}{100}\right) \qquad \ldots\ldots\ldots\ldots\ldots\ldots (i)$$

and velocity of the belt passing over the follower per second,

$$\frac{\pi d_2 . N_2}{60} = v - v \times \frac{s_2}{100} = v\left(1 - \frac{s_2}{100}\right)$$

Substituting the value of v from equation *(i)*,

$$\frac{\pi d_2 N_2}{60} = \frac{\pi d_1 N_1}{60}\left(1 - \frac{s_1}{100}\right)\left(1 - \frac{s_2}{100}\right)$$

$$\frac{N_2}{N_1} = \frac{d_1}{d_2}\left(1 - \frac{s_1}{100} - \frac{s_2}{100}\right) \qquad \ldots\left(\text{Neglecting } \frac{s_1 \times s_2}{100 \times 100}\right)$$

$$= \frac{d_1}{d_2}\left(1 - \frac{s_1 + s_2}{100}\right) = \frac{d_1}{d_2}\left(1 - \frac{s}{100}\right)$$

... (where $s = s_1 + s_2$, *i.e.* total percentage of slip)

Atmiya University Rajkot

LENGTH OF OPEN BELT DRIVE

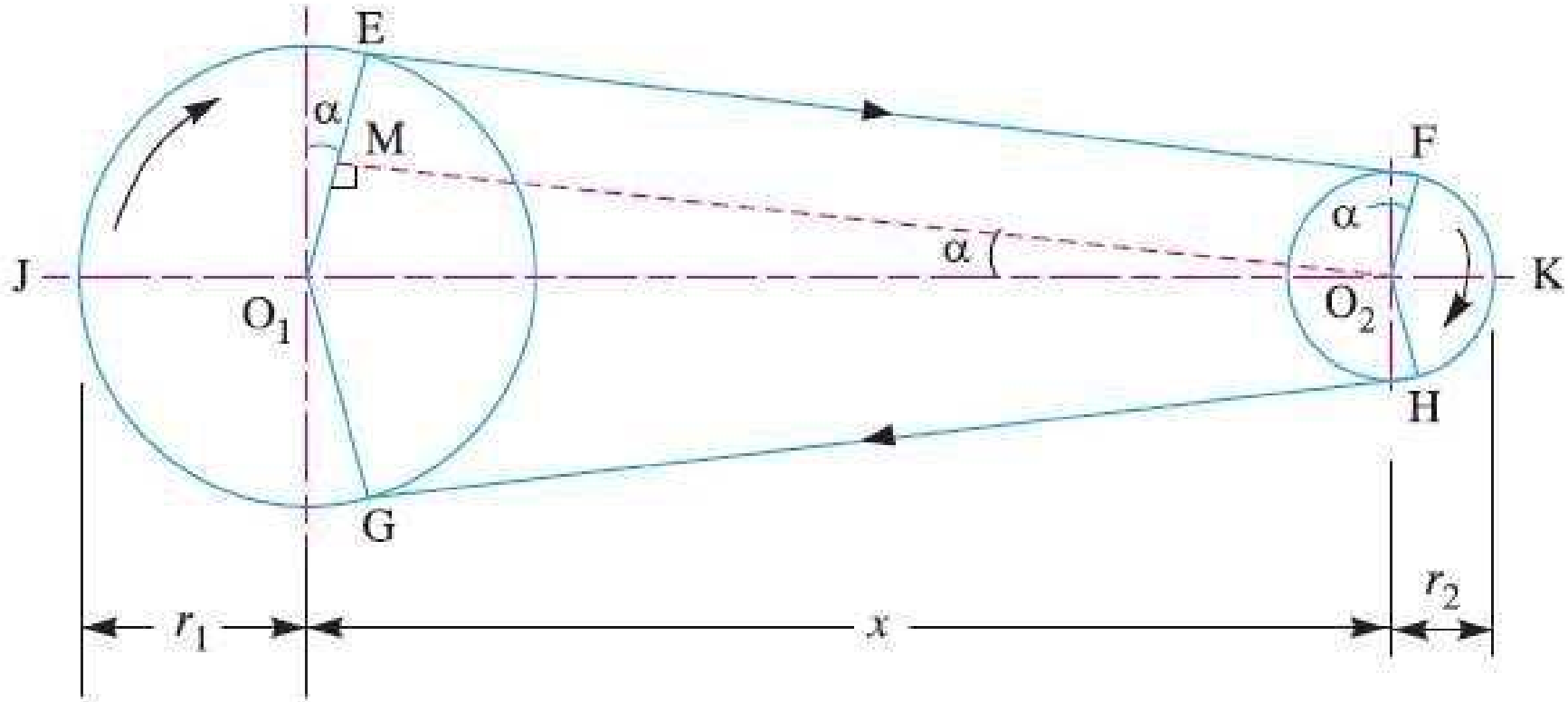

Let r_1 and r_2 = Radii of the larger and smaller pulleys,

x = Distance between the centres of two pulleys (*i.e.* O_1O_2), and

L = Total length of the belt.

Atmiya University Rajkot

Let the belt leaves the larger pulley at E and G and the smaller pulley at F and H as shown in Fig. 18.13. Through O_2 draw O_2M parallel to FE.

From the geometry of the figure, we find that O_2M will be perpendicular to O_1E.

Let the angle $MO_2O_1 = \alpha$ radians.

We know that the length of the belt,

$$L = \text{Arc } GJE + EF + \text{Arc } FKH + HG$$

$$= 2\,(\text{Arc } JE + EF + \text{Arc } FK) \qquad \ldots(i)$$

From the geometry of the figure, we also find that

$$\sin\alpha = \frac{O_1M}{O_1O_2} = \frac{O_1E - EM}{O_1O_2} = \frac{r_1 - r_2}{x}$$

Since the angle α is very small, therefore putting

$$\sin\alpha = \alpha \text{ (in radians)} = \frac{r_1 - r_2}{x} \qquad \ldots(ii)$$

$$\therefore \qquad \text{Arc } JE = r_1\left(\frac{\pi}{2} + \alpha\right) \qquad \ldots(iii)$$

Similarly,

$$\text{arc } FK = r_2\left(\frac{\pi}{2} - \alpha\right) \qquad \ldots(iv)$$

and

$$EF = MO_2 = \sqrt{(O_1O_2)^2 - (O_1M)^2} = \sqrt{x^2 - (r_1 - r_2)^2}$$

$$= x\sqrt{1 - \left(\frac{r_1 - r_2}{x}\right)^2}$$

Expanding this equation by binomial theorem, we have

$$EF = x\left[1 - \frac{1}{2}\left(\frac{r_1 - r_2}{x}\right)^2 + \ldots\right] = x - \frac{(r_1 - r_2)^2}{2x} \qquad \ldots(v)$$

Atmiya University Rajkot

Substituting the values of arc JE from equation (*iii*), arc FK from equation (*iv*) and EF from equation (*v*) in equation (*i*), we get

$$L = 2\left[r_1\left(\frac{\pi}{2}+\alpha\right) + x - \frac{(r_1 - r_2)^2}{2x} + r_2\left(\frac{\pi}{2}-\alpha\right)\right]$$

$$= 2\left[r_1 \times \frac{\pi}{2} + r_1.\alpha + x - \frac{(r_1 - r_2)^2}{2x} + r_2 \times \frac{\pi}{2} - r_2.\alpha\right]$$

$$= 2\left[\frac{\pi}{2}(r_1 + r_2) + \alpha(r_1 - r_2) + x - \frac{(r_1 - r_2)^2}{2x}\right]$$

$$= \pi(r_1 + r_2) + 2\alpha(r_1 - r_2) + 2x - \frac{(r_1 - r_2)^2}{x}$$

Substituting the value of $\alpha = \dfrac{(r_1 - r_2)}{x}$ from equation (*ii*), we get

$$L = \pi(r_1 + r_2) + 2 \times \frac{(r_1 - r_2)}{x}(r_1 - r_2) + 2x - \frac{(r_1 - r_2)^2}{x}$$

$$= \pi(r_1 + r_2) + \frac{2(r_1 - r_2)^2}{x} + 2x - \frac{(r_1 - r_2)^2}{x}$$

$$= \pi(r_1 + r_2) + 2x + \frac{(r_1 - r_2)^2}{x} \quad \text{... (in terms of pulley radii)}$$

$$= \frac{\pi}{2}(d_1 + d_2) + 2x + \frac{(d_1 - d_2)^2}{4x} \quad \text{... (in terms of pulley diameters)}$$

Atmiya University Rajkot

Length of Cross Belt Drive

Let r_1 and r_2 = Radii of the larger and smaller pulleys,

x = Distance between the centres of two pulleys (*i.e.* O_1O_2), and

L = Total length of the belt.

Let the belt leaves the larger pulley at E and G and the smaller pulley at F and H as shown in Fig.

Through O_2 draw O_2M parallel to FE.

From the geometry of the figure, we find that O_2M will be perpendicular to O_1E.

Let the angle $MO_2O_1 = \alpha$ radians.

We know that the length of the belt,

$$L = \text{Arc } GJE + EF + \text{Arc } FKH + HG$$

$$= 2\,(\text{Arc } JE + FE + \text{Arc } FK) \qquad \ldots(i)$$

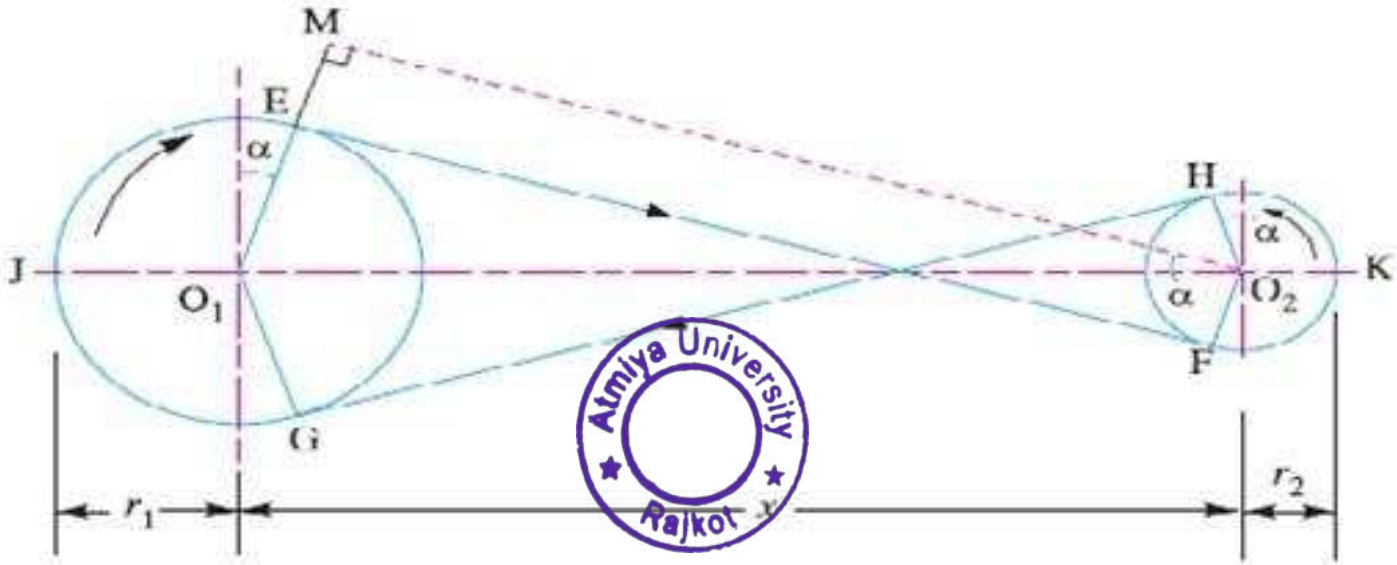

Atmiya University Rajkot

From the geometry of the figure, we find that

$$\sin\alpha = \frac{O_1M}{O_1O_2} = \frac{O_1E + EM}{O_1O_2} = \frac{r_1 + r_2}{x}$$

Since the angle α is very small, therefore putting

$$\sin\alpha = \alpha \text{ (in radians)} = \frac{r_1 + r_2}{x} \qquad \ldots(ii)$$

$$\therefore \qquad \text{Arc } JE = r_1\left(\frac{\pi}{2} + \alpha\right) \qquad \ldots(iii)$$

Similarly, $$\text{arc } FK = r_2\left(\frac{\pi}{2} + \alpha\right) \qquad \ldots(iv)$$

and $$EF = MO_2 = \sqrt{(O_1O_2)^2 - (O_1M)^2} = \sqrt{x^2 - (r_1 + r_2)^2}$$

$$= x\sqrt{1 - \left(\frac{r_1 + r_2}{x}\right)^2}$$

Expanding this equation by binomial theorem, we have

$$EF = x\left[1 - \frac{1}{2}\left(\frac{r_1 + r_2}{x}\right)^2 + \ldots\right] = x - \frac{(r_1 + r_2)^2}{2x} \qquad \ldots(v)$$

Atmiya University Rajkot

Substituting the values of arc JE from equation (*iii*), arc FK from equation (*iv*) and EF from equation (*v*) in equation (*i*), we get,

$$L = 2\left[r_1\left(\frac{\pi}{2}+\alpha\right) + x - \frac{(r_1+r_2)^2}{2x} + r_2\left(\frac{\pi}{2}+\alpha\right)\right]$$

$$= 2\left[r_1 \times \frac{\pi}{2} + r_1.\alpha + x - \frac{(r_1+r_2)^2}{2x} + r_2 \times \frac{\pi}{2} + r_2.\alpha\right]$$

$$= 2\left[\frac{\pi}{2}(r_1+r_2) + \alpha(r_1+r_2) + x - \frac{(r_1+r_2)^2}{2x}\right]$$

$$= \pi(r_1+r_2) + 2\alpha(r_1+r_2) + 2x - \frac{(r_1+r_2)^2}{x}$$

Substituting the value of $\alpha = \dfrac{(r_1+r_2)}{x}$ from equation (*ii*), we get

$$L = \pi(r_1+r_2) + 2 \times \frac{(r_1+r_2)}{x}(r_1+r_2) + 2x - \frac{(r_1+r_2)^2}{x}$$

$$= \pi(r_1+r_2) + \frac{2(r_1+r_2)^2}{x} + 2x - \frac{(r_1+r_2)^2}{x}$$

$$= \pi(r_1+r_2) + 2x + \frac{(r_1+r_2)^2}{x} \quad \text{... (in terms of pulley radii)}$$

$$= \frac{\pi}{2}(d_1+d_2) + 2x + \frac{(d_1+d_2)^2}{4x} \quad \text{... (in terms of pulley diameters)}$$

Atmiya University Rajkot

CROWNING OF PULLEY

- In a flat belt pulley, the rim surface is given a convex shape by increasing the thickness of a rim at the center. This increased thickness is called crown and the process is known as crowning of pulley.

OBJECTIVES OF CROWNING OF PULLEY

i) In flat belt drive, if the two shaft are not exactly parallel, there is tendency of belt to come off from the pulley in running condition. The crowning prevents the coming off of the belt from the pulley.

ii) The crowning helps to keep the belt near the mid plane of the pulley in running conditions.

Atmiya University Rajkot

RATIO OF DRIVING TENSIONS FOR FLAT BELT DRIVE

Consider a driven pulley rotating in the clockwise direction as shown in Fig.

Let T_1 = Tension in the belt on the tight side,

T_2 = Tension in the belt on the slack side, and

θ = Angle of contact in radians (*i.e.* angle subtended by the arc AB, along which the belt touches the pulley, at the centre).

Now consider a small portion of the belt PQ, subtending an angle $\delta\theta$ at the centre of the pulley as shown in Fig. The belt PQ is in equilibrium under the following forces:

1. Tension T in the belt at P,
2. Tension $(T + \delta T)$ in the belt at Q,
3. Normal reaction R_N, and
4. Frictional force $F = \mu \times R_N$, where μ is the coefficient of friction between the belt and pulley.

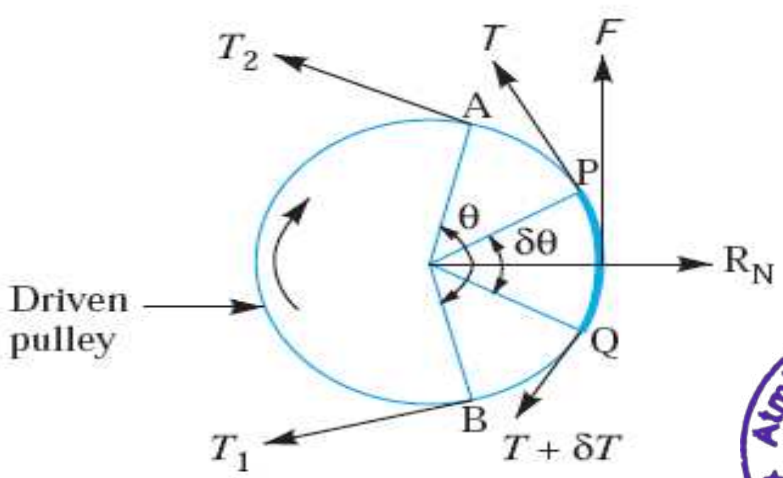

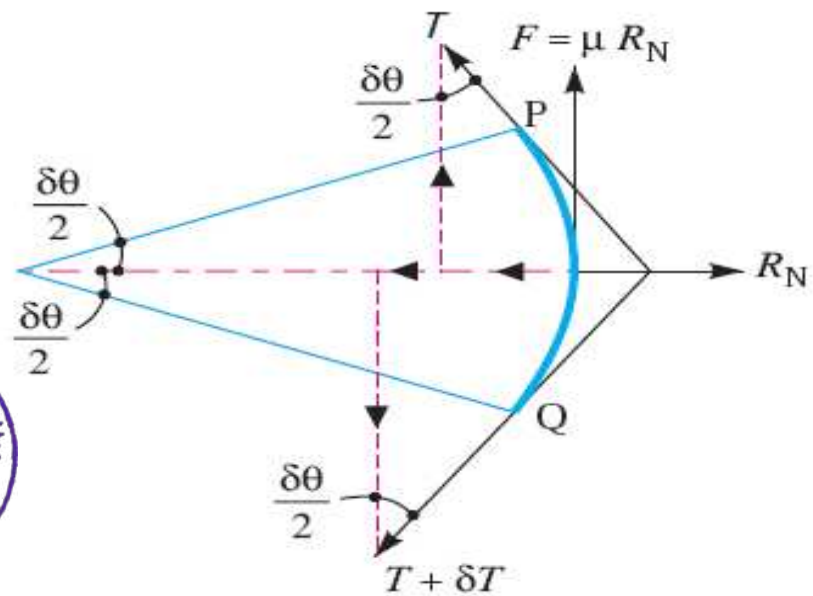

Atmiya University Rajkot

Resolving all the forces horizontally, we have

$$R_N = (T + \delta T)\sin\frac{\delta\theta}{2} + T\sin\frac{\delta\theta}{2} \qquad \text{...(i)}$$

Since the angle $\delta\theta$ is very small, therefore putting $\sin\delta\theta/2 = \delta\theta/2$ in equation (*i*), we have

$$R_N = (T + \delta T)\frac{\delta\theta}{2} + T\frac{\delta\theta}{2} = \frac{T.\delta\theta}{2} + \frac{\delta T.\delta\theta}{2} + \frac{T.\delta\theta}{2}$$

$$= T.\delta\theta \qquad \text{...}\left(\text{Neglecting } \frac{\delta T.\delta\theta}{2}\right) \qquad \text{...(ii)}$$

Now resolving the forces vertically, we have

$$\mu \times R_N = (T + \delta T)\cos\frac{\delta\theta}{2} - T\cos\frac{\delta\theta}{2} \qquad \text{...(iii)}$$

Since the angle $\delta\theta$ is very small, therefore putting $\cos\delta\theta/2 = 1$ in equation (*iii*), we have

$$\mu \times R_N = T + \delta T - T = \delta T \quad \text{or} \quad R_N = \frac{\delta T}{\mu} \qquad \text{...(iv)}$$

Atmiya University Rajkot

Equating the values of R_N from equations (*ii*) and (*iv*), we get

$$T.\delta\theta = \frac{\delta T}{\mu} \quad \text{or} \quad \frac{\delta T}{T} = \mu.\delta\theta$$

Integrating the above equation between the limits T_2 and T_1 and from 0 to θ, we have

$$\int_{T_2}^{T_1} \frac{\delta T}{T} = \mu \int_0^{\theta} \delta\theta$$

$$\therefore \qquad \log_e\left(\frac{T_1}{T_2}\right) = \mu.\theta \quad \text{or} \quad \frac{T_1}{T_2} = e^{\mu.\theta} \qquad \ldots(v)$$

The equation (*v*) can be expressed in terms of corresponding logarithm to the base 10, *i.e.*

$$2.3 \log\left(\frac{T_1}{T_2}\right) = \mu.\theta$$

The above expression gives the relation between the tight side and slack side tensions, in terms of coefficient of friction and the angle of contact.

Atmiya University Rajkot

ANGLE OF CONTACT OR ANGLE OF LAP OR ANGLE OF WRAP

1. Open Belt Drive

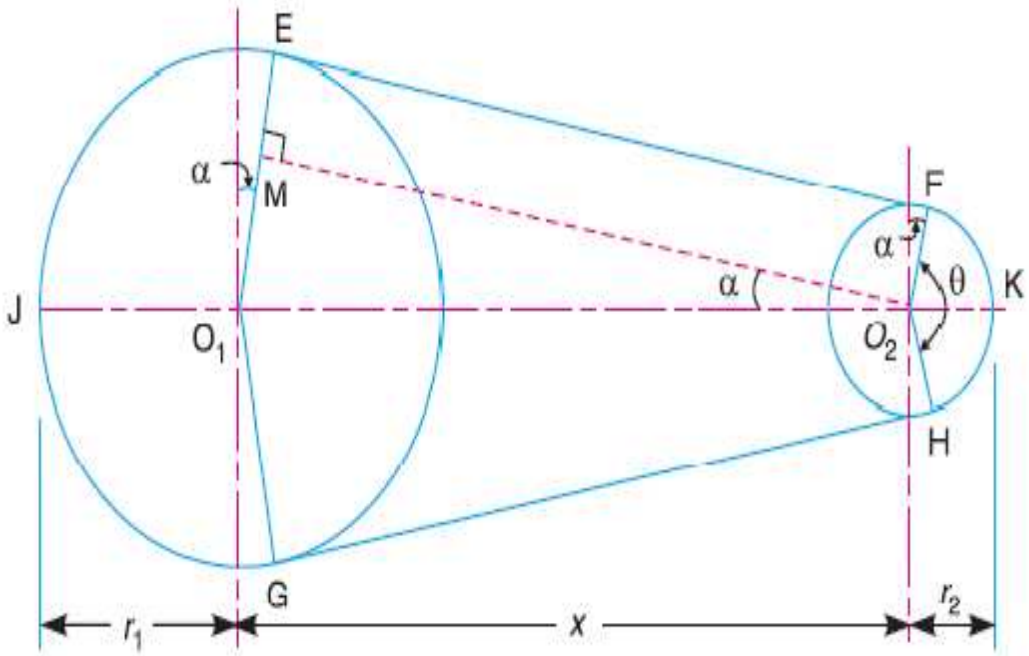

Open belt drive

r_1 = Radius of larger pulley.

r_2 = Radius of smaller pulley.

x = Centre distance between two pulley.

Angle of contact (θ)

$$\theta = (180 - 2\alpha)^\circ$$

$$= (180 - 2\alpha)\frac{\pi}{180} \text{ Radian}$$

Where $\sin\alpha = \left(\frac{r_1 - r_2}{x}\right)$

Atmiya University Rajkot

2. Cross Belt Drive

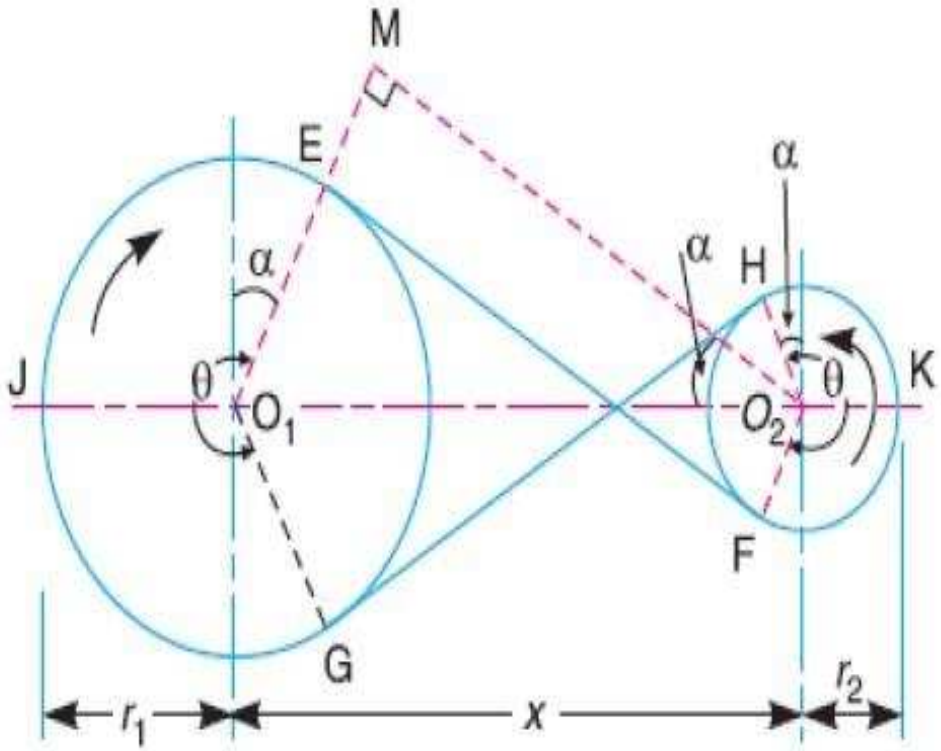

Crossed Belt drive

Angle of contact (θ)

$$\theta = (180 + 2\alpha)^{\circ}$$

$$= (180 + 2\alpha)\frac{\pi}{180} \text{ Radian}$$

$$\text{Where } \sin\alpha = \left(\frac{r_1 + r_2}{x}\right)$$

Atmiya University Rajkot

CENTRIFUGAL TENSION ON BELT

Since the belt continuously runs over the pulleys, therefore, some centrifugal force is caused, whose effect is to increase the tension on both the tight as well as the slack sides. The tension caused by centrifugal force is called ***centrifugal tension.*** At lower belt speeds (less than 10 m/s), the centrifugal tension is very small, but at higher belt speeds (more than 10 m/s), its effect is considerable and thus should be taken into account.

Consider a small portion PQ of the belt subtending an angle $d\theta$ at the centre of the pulley, as shown in Fig.

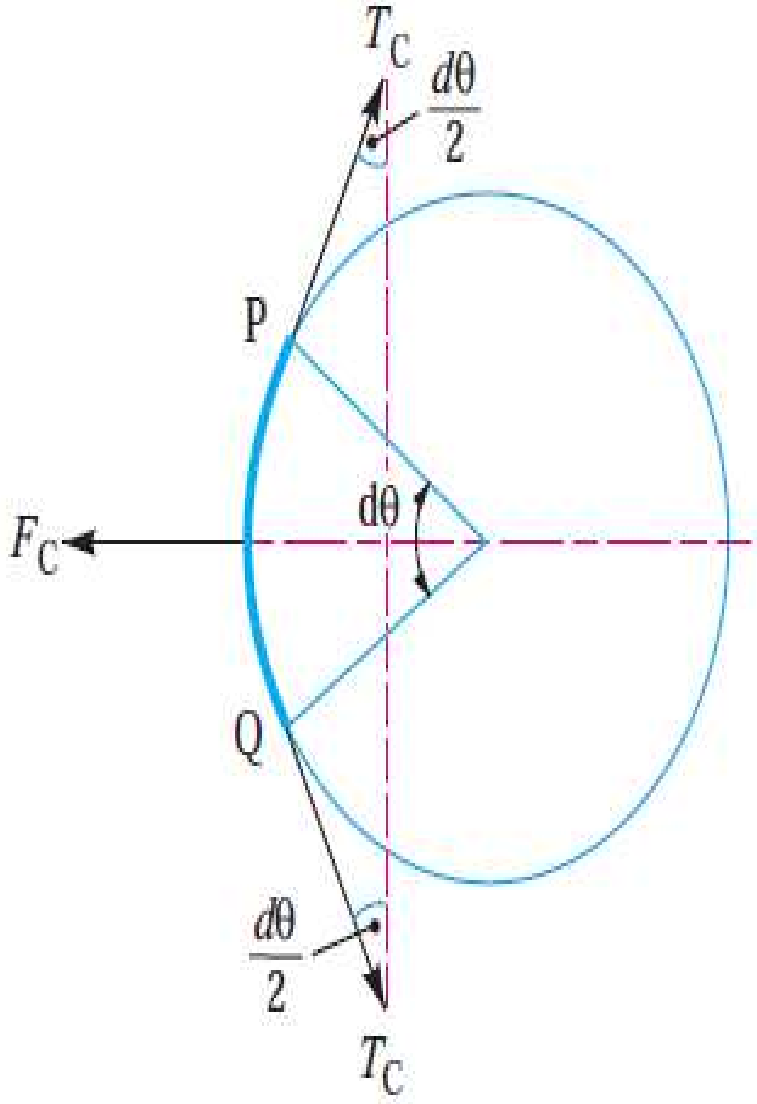

Atmiya University Rajkot

Let m = Mass of belt per unit length in kg,

v = Linear velocity of belt in m/s,

r = Radius of pulley over which the belt runs in metres, and

T_C = Centrifugal tension acting tangentially at P and Q in newtons.

We know that length of the belt PQ

$$= r.d\theta$$

and mass of the belt PQ $= m.r.d\theta$

∴ Centrifugal force acting on the belt PQ,

$$F_C = m.r.d\theta \times \frac{v^2}{r} = m.d\theta.v^2$$

The centrifugal tension T_C acting tangentially at P and Q keeps the belt in equilibrium. Now resolving the forces (*i.e.* centrifugal force and centrifugal tension) horizontally, we have

$$T_C \sin\left(\frac{d\theta}{2}\right) + T_C \sin\left(\frac{d\theta}{2}\right) = F_C = m.d\theta.v^2 \quad \text{...(i)}$$

Since the angle $d\theta$ is very small, therefore putting $\sin\left(\frac{d\theta}{2}\right) = \frac{d\theta}{2}$ in equation (*i*), we have

$$2T_C\left(\frac{d\theta}{2}\right) = m.d\theta.v^2$$

$$\therefore \quad T_C = m.v^2$$

Notes : 1. When centrifugal tension is taken into account, then total tension in the tight side,

$$T_{t1} = T_1 + T_C$$

and total tension in the slack side,

$$T_{t2} = T_2 + T_C$$

Atmiya University Rajkot

2. Power transmitted,

$$P = (T_{t1} - T_{t2})\, v \qquad \text{...(in watts)}$$

$$= [(T_1 + T_C) - (T_2 + T_C)]\, v = (T_1 - T_2)\, v \qquad \text{... (same as before)}$$

Thus we see that the centrifugal tension has no effect on the power transmitted.

3. The ratio of driving tensions may also be written as

$$2.3 \log \left(\frac{T_{t1} - T_C}{T_{t2} - T_C} \right) = \mu.\theta$$

where T_{t1} = Maximum or total tension in the belt.

Atmiya University Rajkot

MAXIMUM TENSION IN THE BELT

A little consideration will show that the maximum tension in the belt (T) is equal to the total tension in the tight side of the belt (T_{t1}).

Let σ = Maximum safe stress,

b = Width of the belt, and

t = Thickness of the belt.

We know that the maximum tension in the belt,

$$T = \text{Maximum stress} \times \text{Cross-sectional area of belt} = \sigma.b.t$$

When centrifugal tension is neglected, then

$$T \text{ (or } T_{t1}) = T_1, \textit{ i.e.} \text{ Tension in the tight side of the belt.}$$

When centrifugal tension is considered, then

$$T \text{ (or } T_{t1}) = T_1 + T_c$$

Atmiya University Rajkot

CONDITION FOR MAXIMUM POWER TRANSMISSION

We know that the power transmitted by a belt,

$$P = (T_1 - T_2)\, v \qquad \ldots(i)$$

where T_1 = Tension in the tight side in newtons,

T_2 = Tension in the slack side in newtons, and

v = Velocity of the belt in m/s.

ratio of driving tensions is

$$\frac{T_1}{T_2} = e^{\mu\theta} \quad \text{or} \quad T_2 = \frac{T_1}{e^{\mu\theta}} \qquad \ldots(ii)$$

Substituting the value of T_2 in equation (*i*), we have

$$P = \left(T_1 - \frac{T_1}{e^{\mu\theta}}\right) v = T_1\left(1 - \frac{1}{e^{\mu\theta}}\right) v = T_1.v.C \qquad \ldots(iii)$$

where $C = \left(1 - \frac{1}{e^{\mu\theta}}\right)$

We know that

$$T_1 = T - T_C$$

where T = Maximum tension to which the belt can be subjected in newtons, and

T_C = Centrifugal tension in newtons.

Substituting the value of T_1 in equation (*iii*), we have

$$P = (T - T_C)\, v \times C$$

$$= (T - mv^2)\, v \times C = (T.v - m.v^3)\, C \qquad \ldots \text{(Substituting } T_C = m.v^2\text{)}$$

Atmiya University Rajkot

For maximum power, differentiate the above expression with respect to v and equate to zero, *i.e.*

$$\frac{dP}{dv} = 0 \quad \text{or} \quad \frac{d}{dv}(T.v - m.v^3)\,C = 0$$

or $$T - 3\,m.v^2 = 0 \qquad \text{...(iv)}$$

$\therefore$ $$T - 3\,T_C = 0 \quad \text{or} \quad T = 3T_C \qquad \text{... } (\because m.v^2 = T_C)$$

It shows that when the power transmitted is maximum, 1/3rd of the maximum tension is absorbed as centrifugal tension.

Notes : 1. We know that $T_1 = T - T_C$ and for maximum power, $T_C = \frac{T}{3}$.

$\therefore$ $$T_1 = T - \frac{T}{3} = \frac{2T}{3}$$

2. From equation (*iv*), we find that the velocity of the belt for maximum power,

$$v = \sqrt{\frac{T}{3m}}$$

Atmiya University Rajkot

INITIAL TENSION IN THE BELT

When a belt is wound round the two pulleys (*i.e.* driver and follower), its two ends are joined together, so that the belt may continuously move over the pulleys, since the motion of the belt (from the driver) and the follower (from the belt) is governed by a firm grip due to friction between the belt and the pulleys. In order to increase this grip, the belt is tightened up. At this stage, even when the pulleys are stationary, the belt is subjected to some tension, called ***initial tension***.

When the driver starts rotating, it pulls the belt from one side (increasing tension in the belt on this side) and delivers to the other side (decreasing tension in the belt on that side). The increased tension in one side of the belt is called tension in tight side and the decreased tension in the other side of the belt is called tension in the slack side.

Let T_0 = Initial tension in the belt,

T_1 = Tension in the tight side of the belt,

T_2 = Tension in the slack side of the belt, and

α = Coefficient of increase of the belt length per unit force.

A little consideration will show that the increase of tension in the tight side

$$= T_1 - T_0$$

and increase in the length of the belt on the tight side

$$= \alpha (T_1 - T_0) \quad \ldots(i)$$

Atmiya University Rajkot

Similarly, decrease in tension in the slack side

$$= T_0 - T_2$$

and decrease in the length of the belt on the slack side

$$= \alpha (T_0 - T_2) \qquad \text{...(ii)}$$

Assuming that the belt material is perfectly elastic such that the length of the belt remains constant, when it is at rest or in motion, therefore increase in length on the tight side is equal to decrease in the length on the slack side. Thus, equating equations (*i*) and (*ii*), we have

$$\alpha (T_1 - T_0) = \alpha (T_0 - T_2)$$

or

$$T_1 - T_0 = T_0 - T_2$$

$$\therefore \quad T_0 = \frac{T_1 + T_2}{2} \qquad \text{... (Neglecting centrifugal tension)}$$

$$= \frac{T_1 + T_2 + 2T_C}{2} \qquad \text{... (Considering centrifugal tension)}$$

Atmiya University Rajkot

METHOD OF BELT TENSIONING

- In order to transmit the power, the belt must be provided with the sufficient initial tension. The power transmitting capacity of the belt drive also depends upon the initial tension.
- Some of the method use to adjust the belt tensions are as follows:-

1. Manual adjustment
2. Pivoted overhung motor
3. Weighted idler pulley

Atmiya University Rajkot

MANUAL ADJUSTMENT

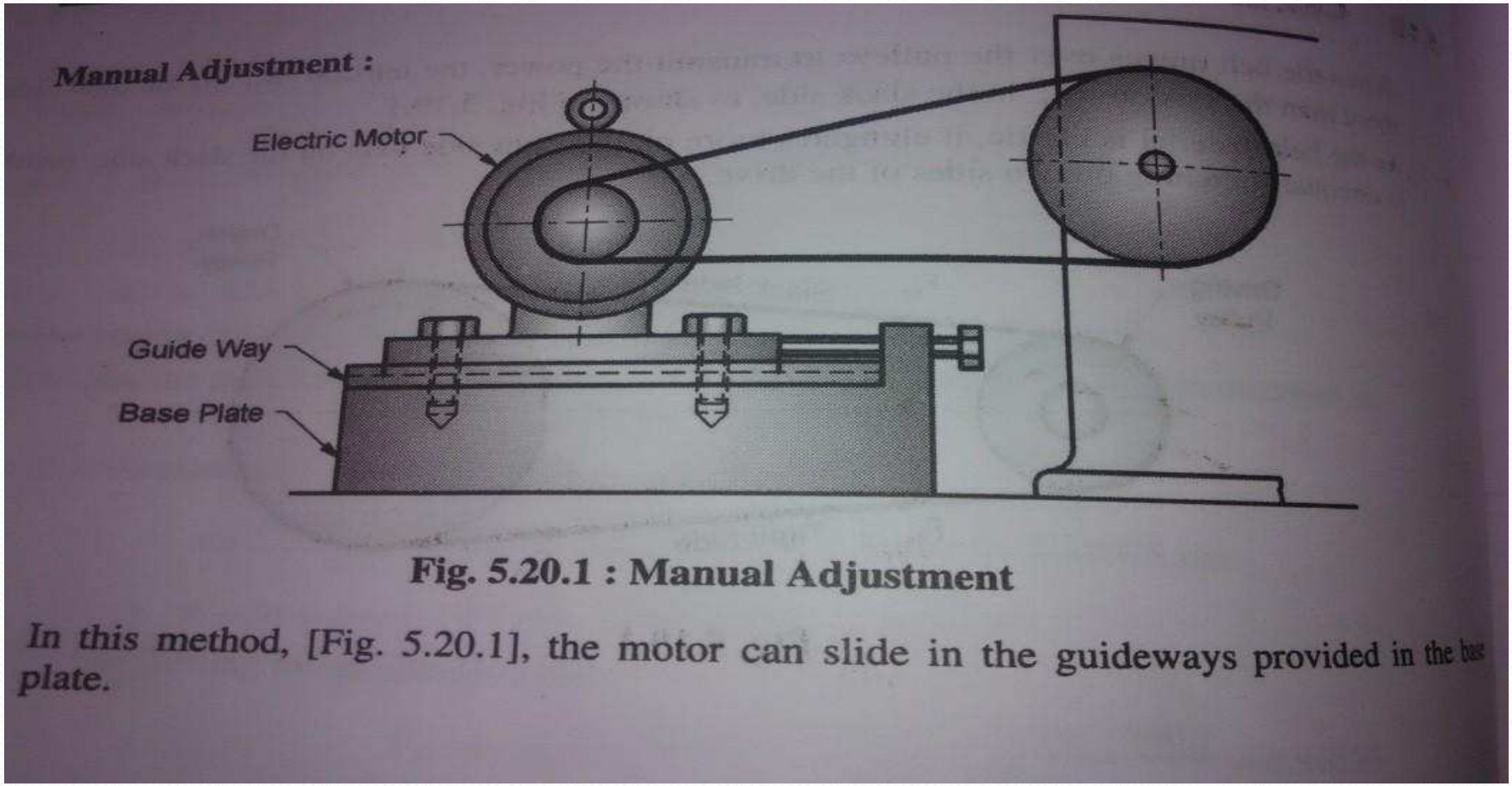

Fig. 5.20.1 : Manual Adjustment

In this method, [Fig. 5.20.1], the motor can slide in the guideways provided in the base plate.

The position of motor and hence the initial tension can be adjusted manually with the help of the screw and nut adjustment.

Marwadi University Rajkot

PIVOTED OVERHUNG MOTOR

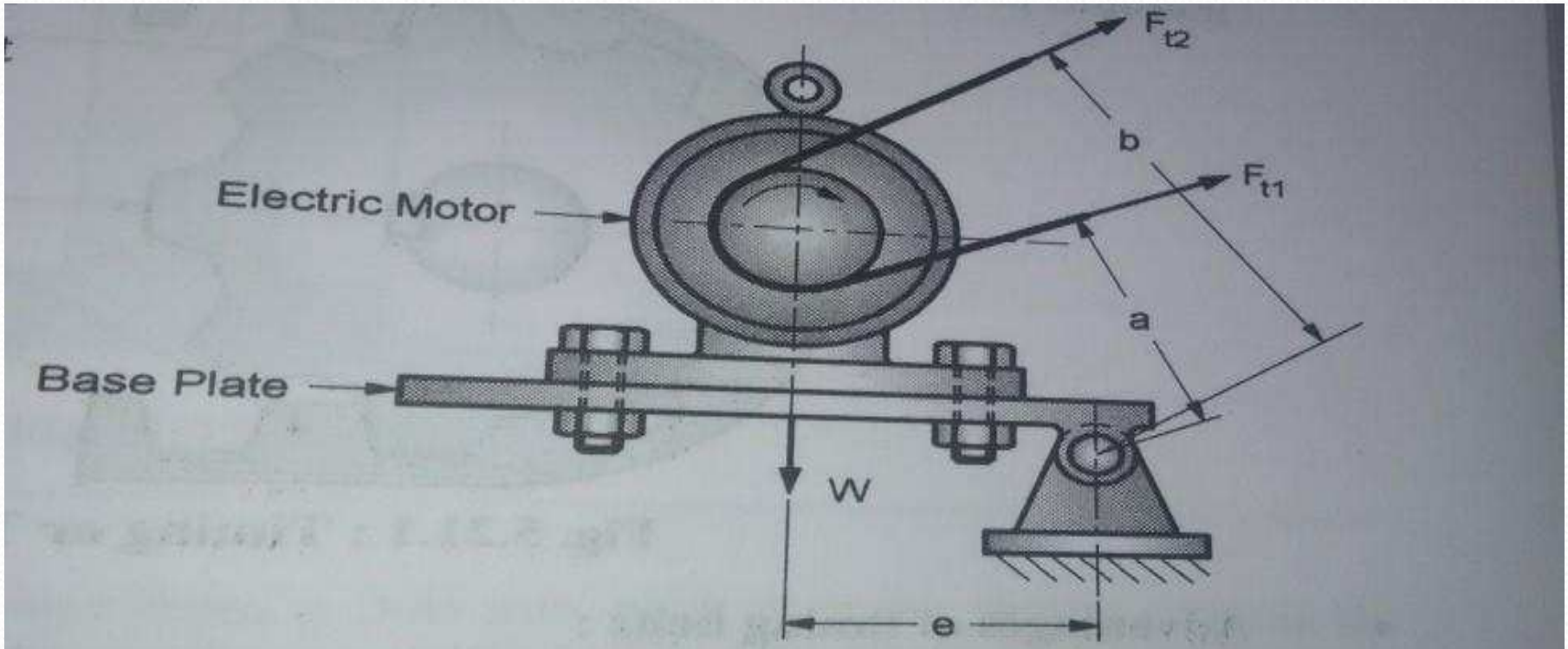

Fig. 5.20.2 : Pivoted Overhung motor

The belt tension is due to the product of the weight of the motor and the moment arm.

Atmiya University Rajkot

WEIGHTED IDLER PULLEY

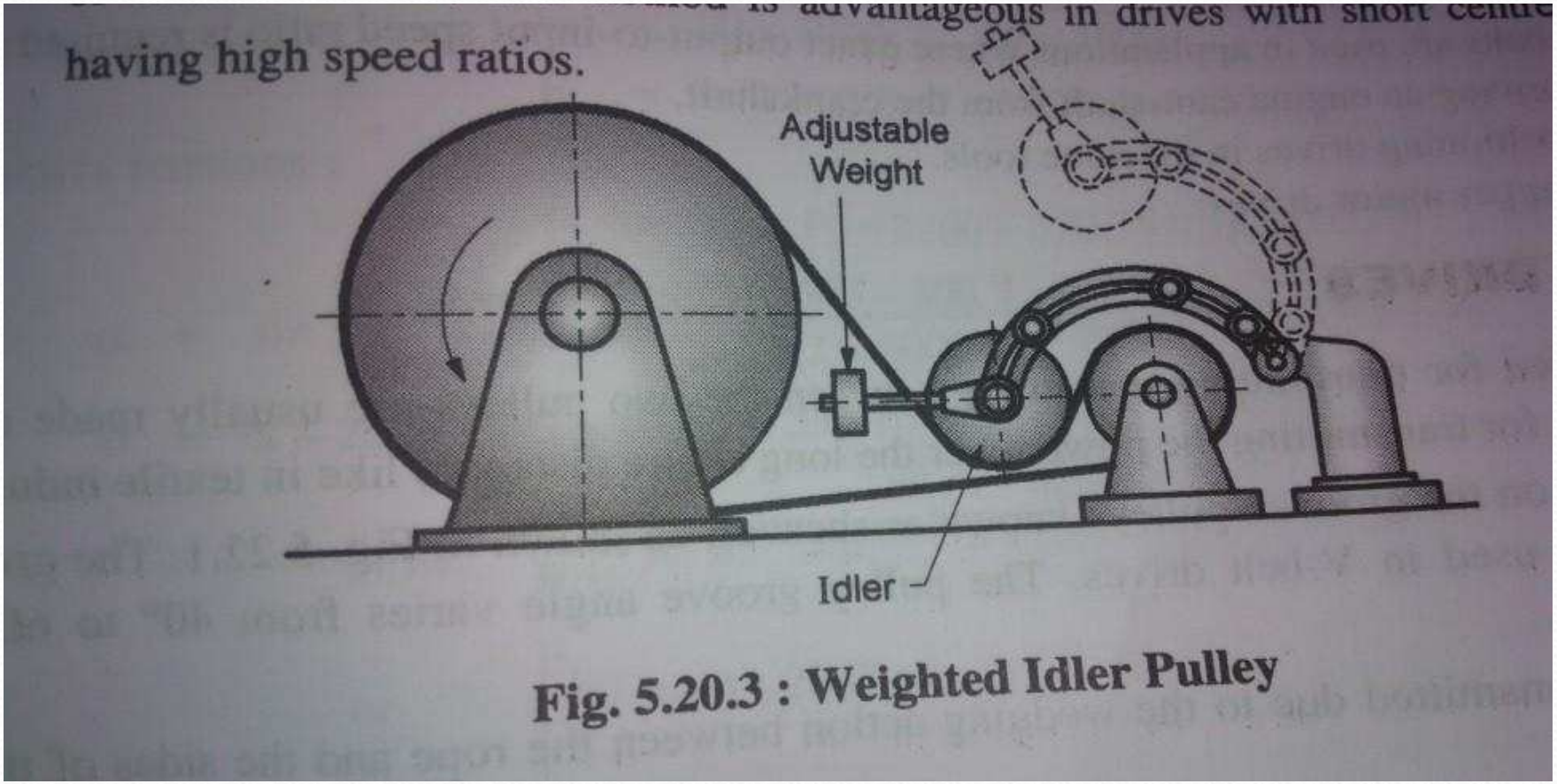

Fig. 5.20.3 : Weighted Idler Pulley

- The idler pulley is held against the belt by its own weight and the adjustable weight.
- By changing the position of the adjustable weight, the required belt tension can be achieved.

Atmiya University Rajkot

CROSS SECTION OF V-BELT & GROOVED PULLEY

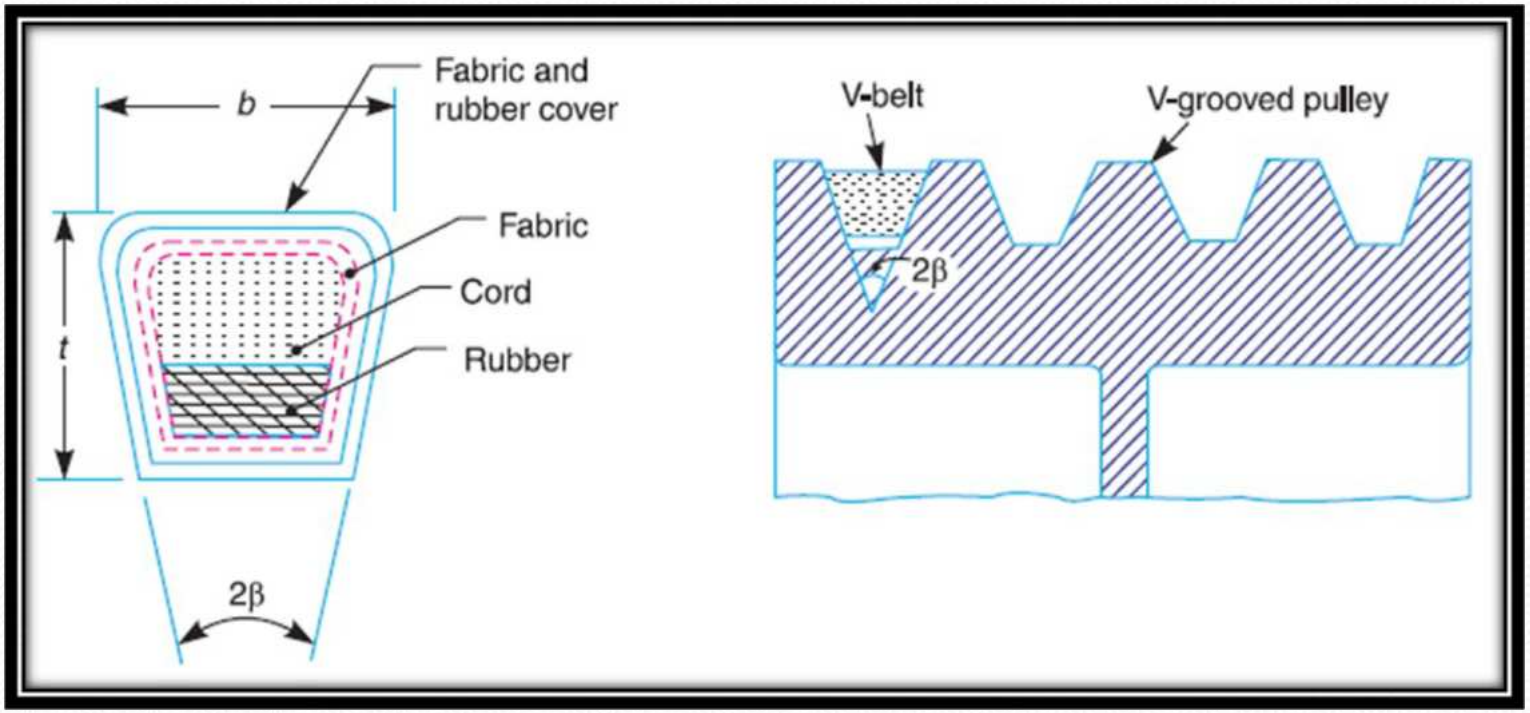

PULLEYS

- The pulleys are used to transmit power from one shaft to another by means of flat belts, V-belts or ropes.
- Since the velocity ratio is the inverse ratio of the diameters of driving and driven pulleys, therefore the pulley diameters should be carefully selected in order to have a desired velocity ratio.
- The pulleys must be in perfect alignment in order to allow the belt to travel in a line normal to the pulley faces.
- The pulleys may be made of cast iron, cast steel or pressed steel.
- The cast materials should have good friction and wear characteristics.
- The pulleys made of pressed steel are lighter than cast pulleys, but in many cases they have lower friction and may produce excessive wear.

Atmiya University Rajkot

DESIGN OF PULLEY (PULLEYS FOR FLAT BELT)

The pulleys for flat belts consist of three parts, viz. rim, hub and arms or web. The rim carries the belt. The hub connects the pulley to the shaft. T arms or web join the hub with the rim. There are two types of pulleys that are used for flat belts viz., cast iron pulleys and mild steel pulleys. The pulley diameters are calculated in belt drive design. They should comply with standard values. The minimum pulley diameter depends upon the following two factors:

(i) The number of plies in the belt

(ii) The belt speed

There is a specific term, 'crowning' of pulley in flat belt drive. The thickness of the rim is slightly increased in the centre to give it a convex or conical shape as shown in Fig. 4.16. This is called 'crown' of the pulley. The crown is provided only on one of the two pulleys. The objectives of providing crown are as follows:

(i) The crown on the pulley helps to hold the belt on the pulley in running condition.

(ii) The crown on the pulley prevents the belt from running off the Pulley.

(iii) The crown on the pulley brings the belt to running equilibrium position near the mid-plane of the Pulley.

Amiya University Rajkot

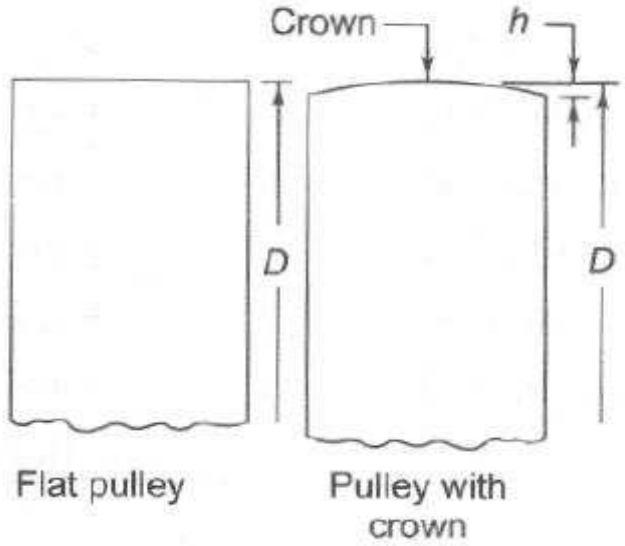

Crown for Pulley

The crown on pulley is essential, particularly when the pulleys are mounted inaccurately or there is a possibility of slip due to non-parallelism between connected shafts.

Cast iron pulleys are made of grey cast iron of Grade FG 200.

Mild steel pulleys are made of structural steels.

The rim and the arms or web are made of low carbon steel while the hub which is subjected to crushing stress at the keyway, is made of medium carbon steel. The rim is roll-formed from a steel plate and joined either by bolts or welded.

The arms are made of round steel bars and welded to the rim. The arms are welded to the hub, if it is made of steel. The arms are screwed to the hub, if it is made of cast iron. Mild steel pulleys have light weight construction compared with cast iron pulleys.

Atmiya University Rajkot

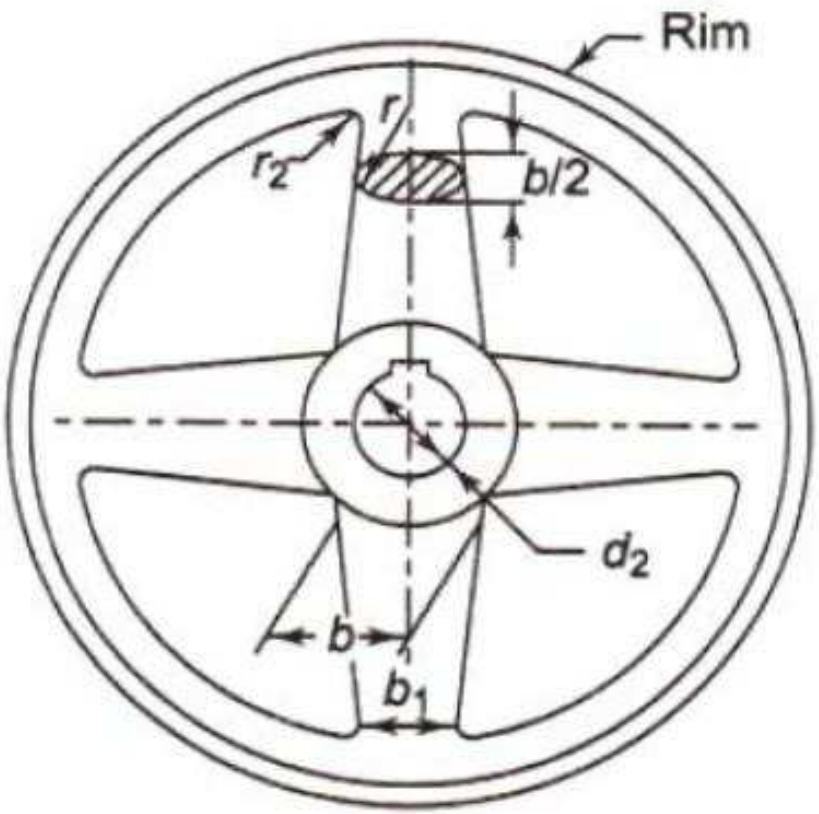

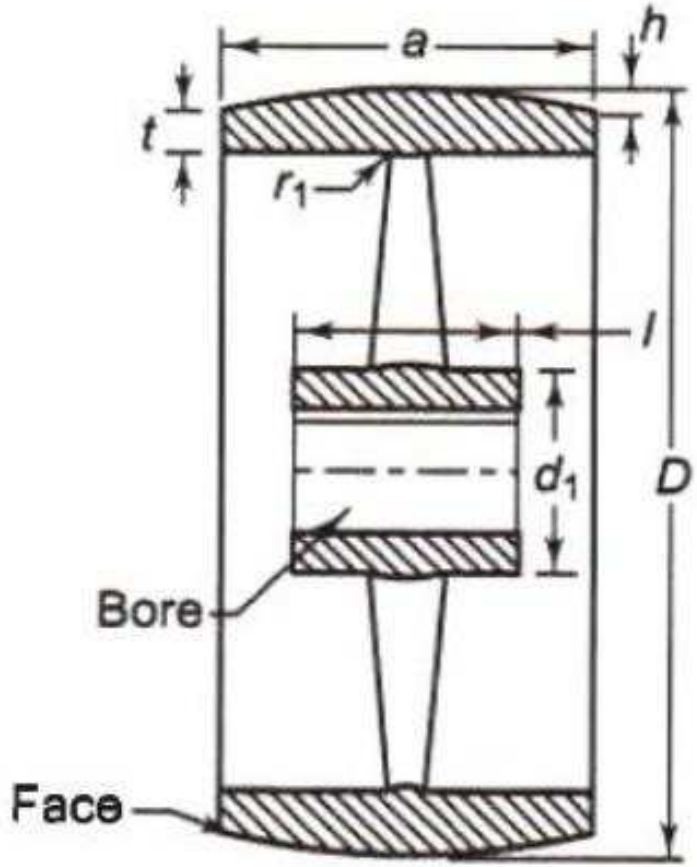

Cast Iron Pulley

Atmiya University Rajkot

Design of Cast Iron Pulley

- The pulleys are generally made of cast iron, because of their low cost. The rim is held in place by web from the central boss or by arms or spokes. The arms may be straight or curved as shown in fig. *and the cross-section is usually elliptical.*

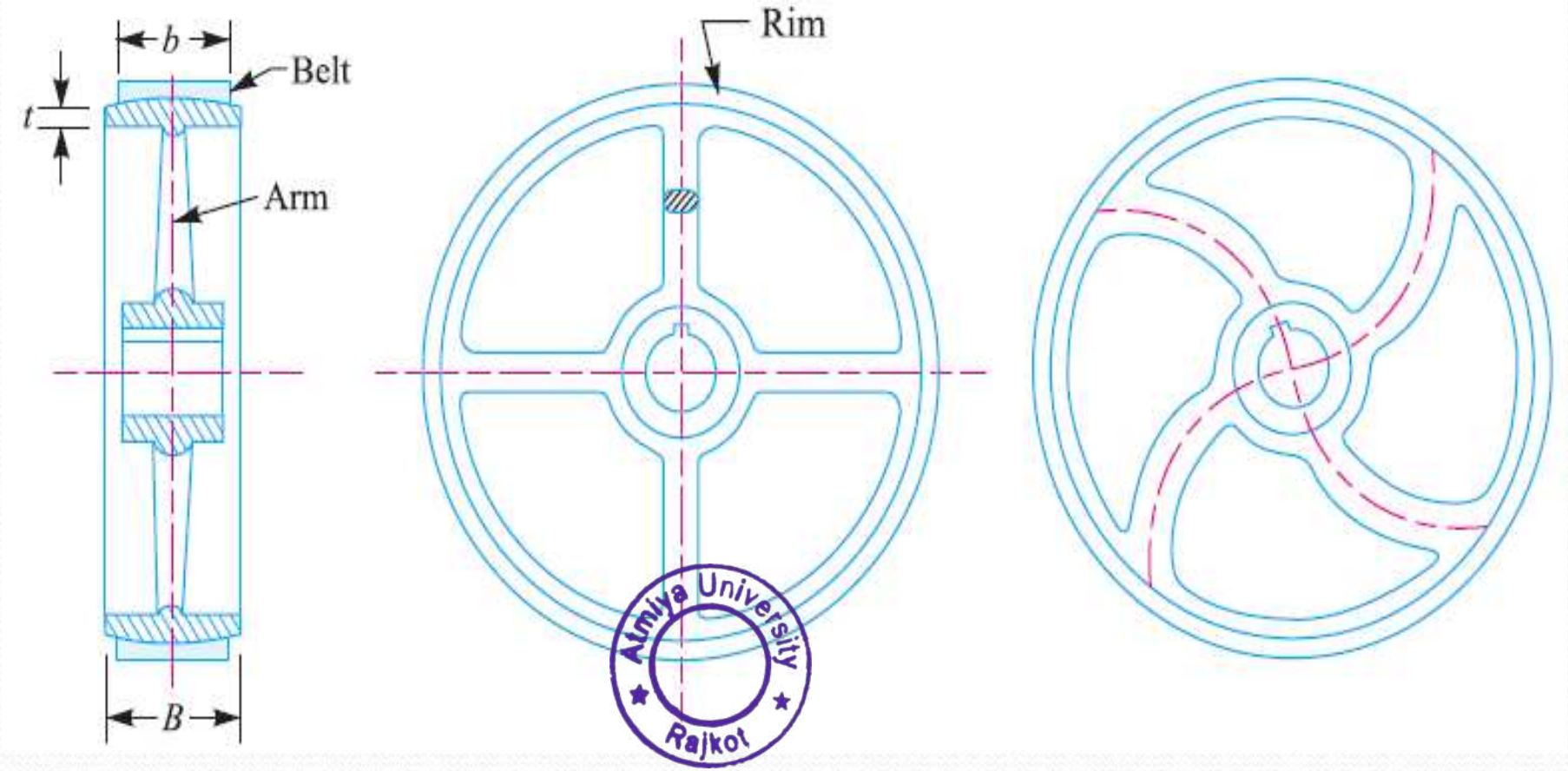

Atmiya University Rajkot

The following procedure may be adopted for the design of cast iron pulleys.

1. *Dimensions of pulley*

(*i*) The diameter of the pulley (D) may be obtained either from velocity ratio consideration or centrifugal stress consideration. We know that the centrifugal stress induced in the rim of the pulley,

$$\sigma_t = \rho . v^2$$

where ρ = Density of the rim material

= 7200 kg/m^3 for cast iron

v = Velocity of the rim = $\pi DN / 60$, D being the diameter of pulley and N is speed of the pulley.

The following are the diameter of pulleys in mm for flat and V-belts.

20, 22, 25, 28, 32, 36, 40, 45, 50, 56, 63, 71, 80, 90, 100, 112, 125, 140, 160, 180, 200, 224, 250, 280, 315, 355, 400, 450, 500, 560, 630, 710, 800, 900, 1000, 1120, 1250, 1400, 1600, 1800, 2000, 2240, 2500, 2800, 3150, 3550, 4000, 5000, 5400.

The first six sizes (20 to 36 mm) are used for V-belts only.

(*ii*) If the width of the belt is known, then width of the pulley or face of the pulley (B) is taken 25% greater than the width of belt.

$$\therefore \quad B = 1.25\, b$$; where b = Width of belt.

According to Indian Standards, IS : 2122 (Part I) – 1973 (Reaffirmed 1990), the width of pulley is fixed as given in the following table :

Atmiya University Rajkot

Belt width in mm	*Width of pulley to be greater than belt width by (mm)*
upto 125	13
125-250	25
250-375	38
475-500	50

The following are the width of flat cast iron and mild steel pulleys in mm :

16, 20, 25, 32, 40, 50, 63, 71, 80, 90, 100, 112, 125, 140, 160, 180, 200, 224, 250, 315, 355, 400, 450, 560, 630.

(*iii*) The thickness of the pulley rim (t) varies from $\frac{D}{300} + 2$ mm to $\frac{D}{200} + 3$ mm for single belt and $\frac{D}{200} + 6$ mm for double belt. The diameter of the pulley (D) is in mm.

2. *Dimensions of arms*

(*i*) The number of arms may be taken as 4 for pulley diameter from 200 mm to 600 mm and 6 for diameter from 600 mm to 1500 mm.

Atmiya University Rajkot

(*ii*) The cross-section of the arms is usually elliptical with major axis (a_1) equal to twice the minor axis (b_1). The cross-section of the arm is obtained by considering the arm as cantilever *i.e.* fixed at the hub end and carrying a concentrated load at the rim end. The length of the cantilever is taken equal to the radius of the pulley. It is further assumed that at any given time, the power is transmitted from the hub to the rim or ***vice versa***, through only half the total number of arms.

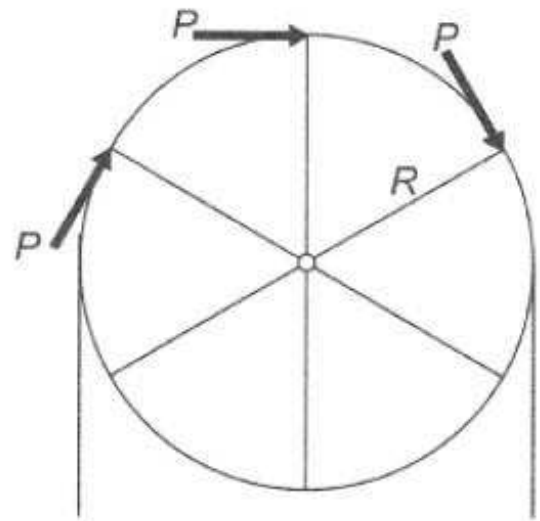

Let T = Torque transmitted,

R = Radius of pulley, and

n = Number of arms,

∴ Tangential load per arm,

$$W_T = \frac{T}{R \times n / 2} = \frac{2T}{R \cdot n}$$

Maximum bending moment on the arm at the hub end,

$$M = \frac{2T}{R \times n} \times R = \frac{2T}{n}$$

and section modulus,

$$Z = \frac{\pi}{32} \times b_1 (a_1)^2$$

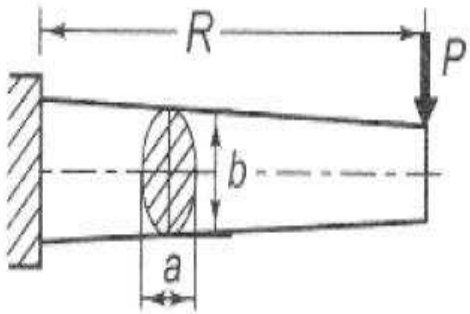

Now using the relation,

σ_b or σ_t = M/Z, the cross-section of the arms is obtained.

(*iii*) The arms are tapered from hub to rim. The taper is usually 1/48 to 1/32.

Atmiya University Rajkot

3. *Dimensions of hub*

(*i*) The diameter of the hub (d_1) in terms of shaft diameter (d) may be fixed by the following relation :

$$d_1 = 1.5\,d + 25 \text{ mm}$$

The diameter of the hub should not be greater than 2 d.

(*ii*) The length of the hub,

$$L = \frac{\pi}{2} \times d$$

The minimum length of the hub is $\frac{2}{3}$ B but it should not be more than width of the pulley (B).

Atmiya University Rajkot

Chain Drive

Performance of different transmission types

	Shaft	Belt	Chain	Gear	Hydraulic	Electric
Required alignment accuracy	High	Medium	Medium	High	None	None
Positive drive	Yes	No (except toothed)	Yes	Yes	Yes	No
Efficiency	High	Medium	High	Variable	Low	Medium
Stiffness	High	Low	High	High	High	N/A
Strength	Medium	Low-medium	High	High	High	N/A
Ability to span large distances	Low	Medium	Medium	Low	Very high	Very high
Maintenance	Low	Medium	High	Medium	Medium	Low
Cost	Low	Low	Low	Medium	High	Medium

Atmiya University Rajkot

Chain Drive: Advantages & Disadvantages

Advantages

1. As no slip takes place during chain drive, hence perfect velocity ratio is obtained.
2. Since the chains are made of metal, therefore they occupy less space in width than a belt or rope drive.
3. It may be used for both long as well as short distances.
4. It gives a high transmission efficiency (upto 98 percent).
5. It gives less load on the shafts.
6. It has the ability to transmit motion to several shafts by one chain only.
7. It transmits more power than belts.
8. It permits high speed ratio of 8 to 10 in one step.
9. It can be operated under adverse temperature and atmospheric conditions.

Disadvantages

1. The production cost of chains is relatively high.
2. The chain drive needs accurate mounting and careful maintenance, particularly lubrication and slack adjustment.
3. The chain drive has velocity fluctuations especially when unduly stretched.

Atmiya University Rajkot

Introduction

- A chain drive consists of an endless chain wrapped around two sprockets.
- A chain can be defined as a series of links connected by a pin joints.
- The sprocket is a toothed wheel with a special profile for the teeth.
- The chain drive is intermediate between belt and gear drives. It has some features of belt drives and some of gear drives.
- **Pitch of chain:** It is distance between the hinge centre of a link and the corresponding hinge centre of adjacent link.
- **Pitch circle diameter of sprocket chain:** It is the diameter of an imaginary circle that passes through the centre of link pins as the chain is wrapped on sprocket.

Atmiya University Rajkot

Chain Drive

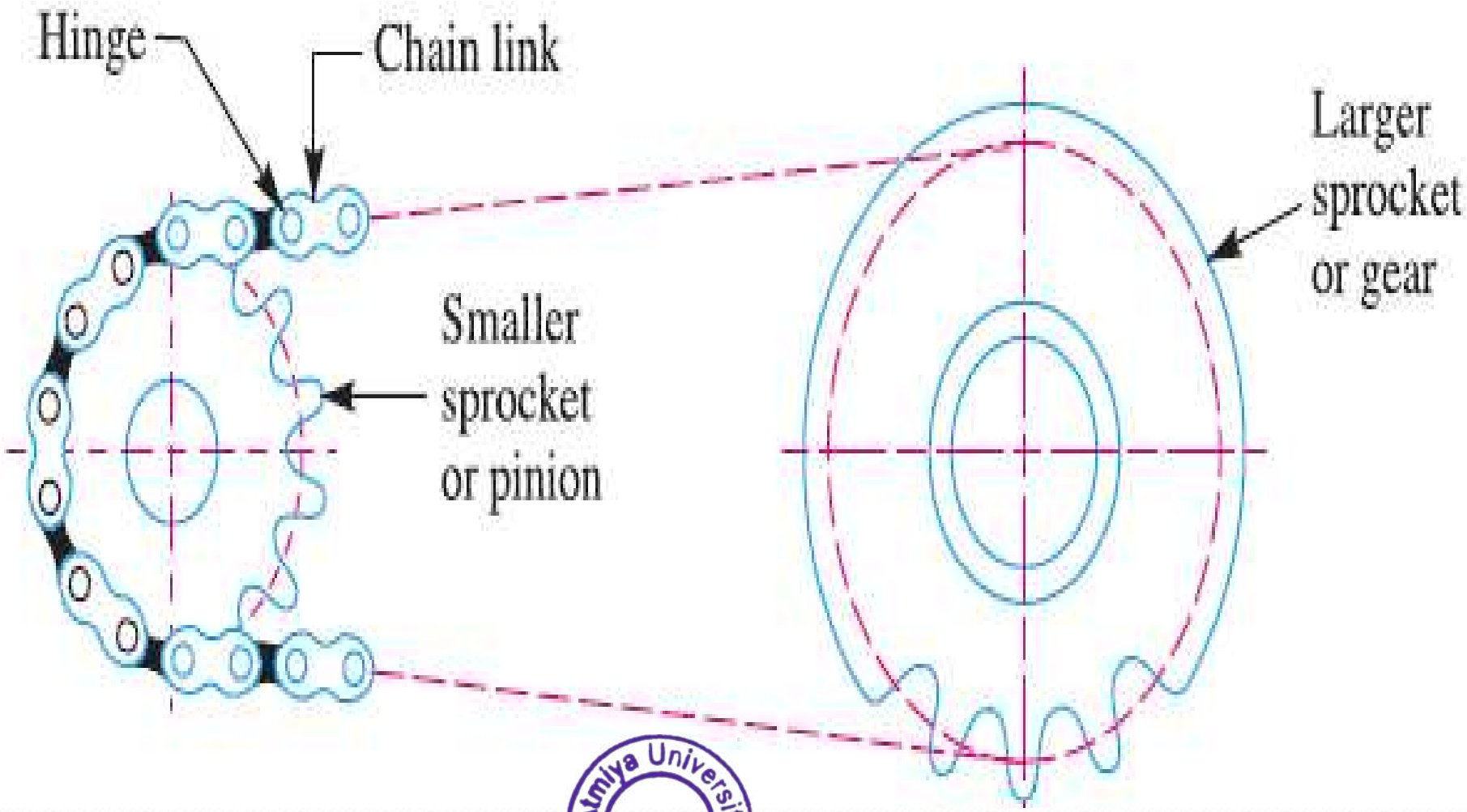

Atmiya University Rajkot

Engagement of a chain and sprocket

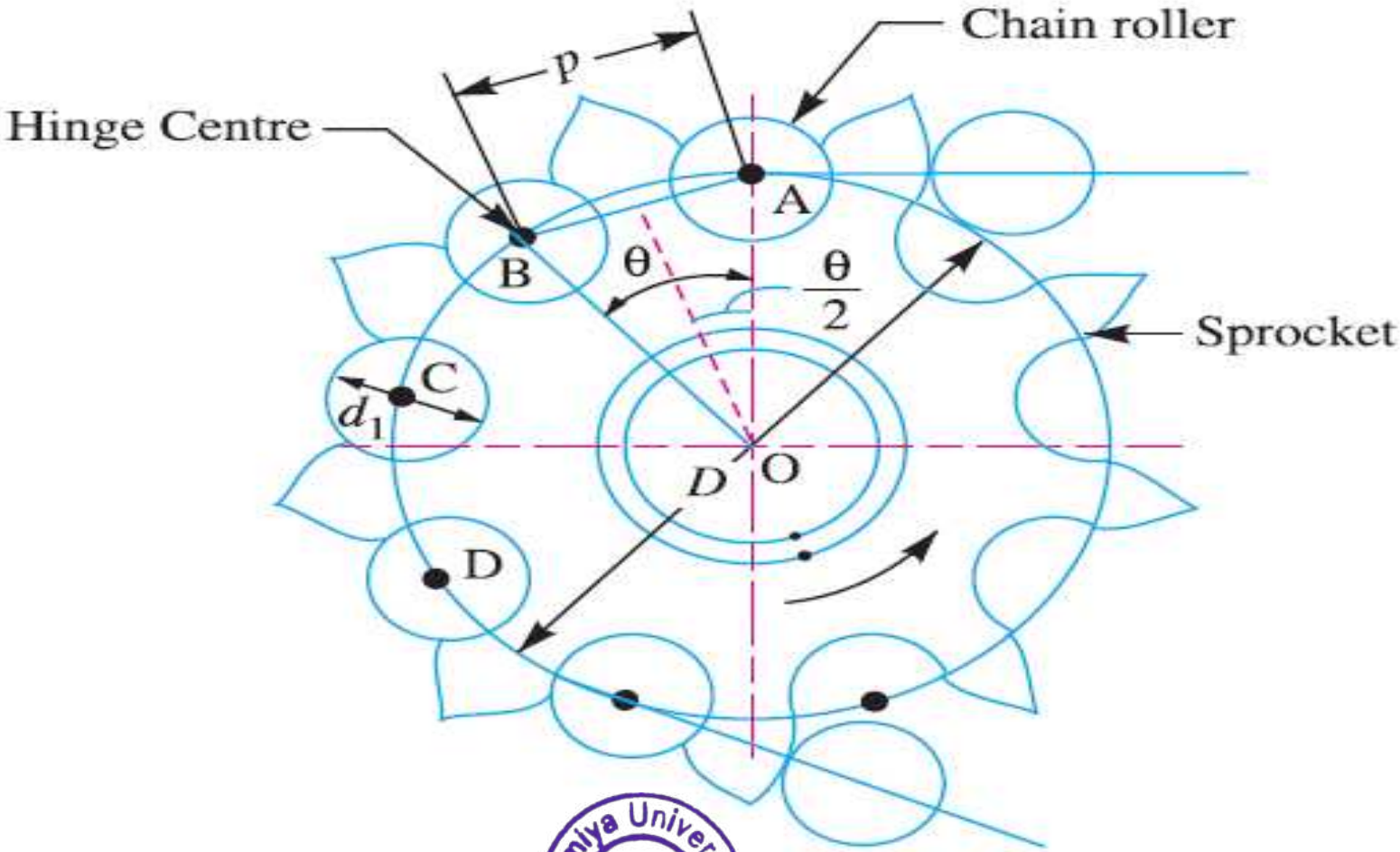

Atmiya University Rajkot

Relation between pitch and pitch circle diameter

$$p = AB = 2\,AO \sin\left(\frac{\theta}{2}\right) = 2 \times \left(\frac{D}{2}\right) \sin\left(\frac{\theta}{2}\right) = D \sin\left(\frac{\theta}{2}\right)$$

We know that $\theta = \dfrac{360^\circ}{T}$

$$\therefore \quad p = D \sin\left(\frac{360^\circ}{2\,T}\right) = D \sin\left(\frac{180^\circ}{T}\right)$$

$$D = p \operatorname{cosec}\left(\frac{180^\circ}{T}\right)$$

D = Diameter of the pitch circle, and

T = Number of teeth on the sprocket.

Atmiya University Rajkot

Chain Types

1. Transmission Chain(Chain to transmit rotary power between shafts)
2. Conveyor chain (for transporting material over long distance)
3. Inverted Tooth Chain (Silent Chain
4. Lifting chain (To lift material)
5. Heavy Duty chain

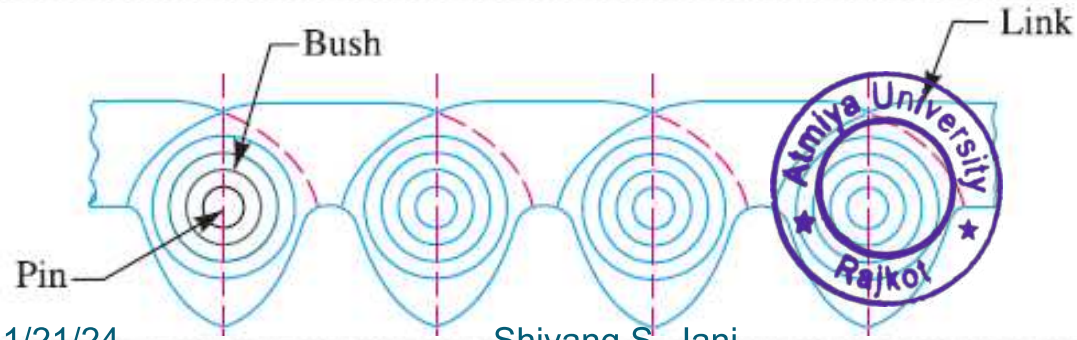

Atmiya University Rajkot

Bush Roller Chain Construction

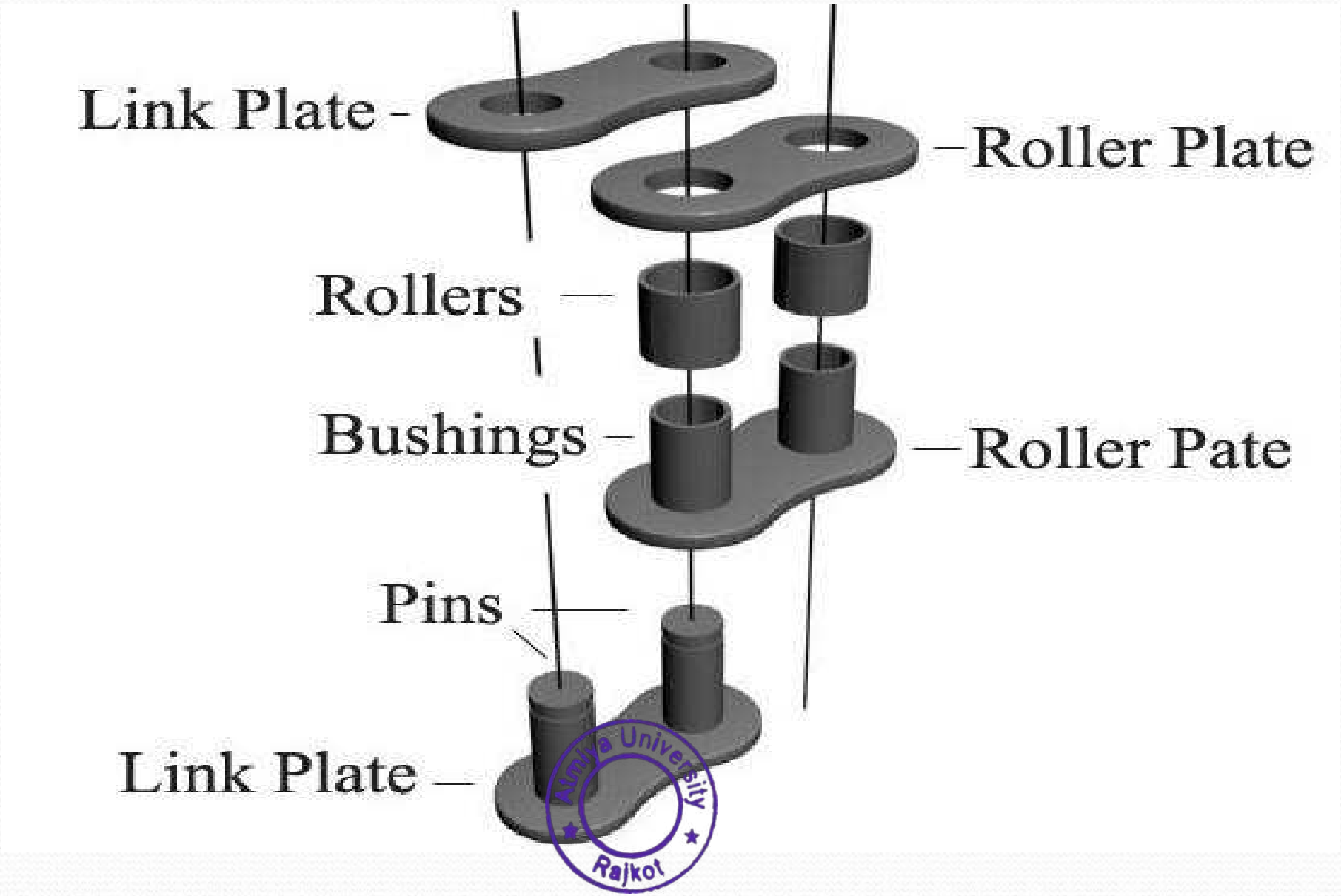

Atmiya University Rajkot

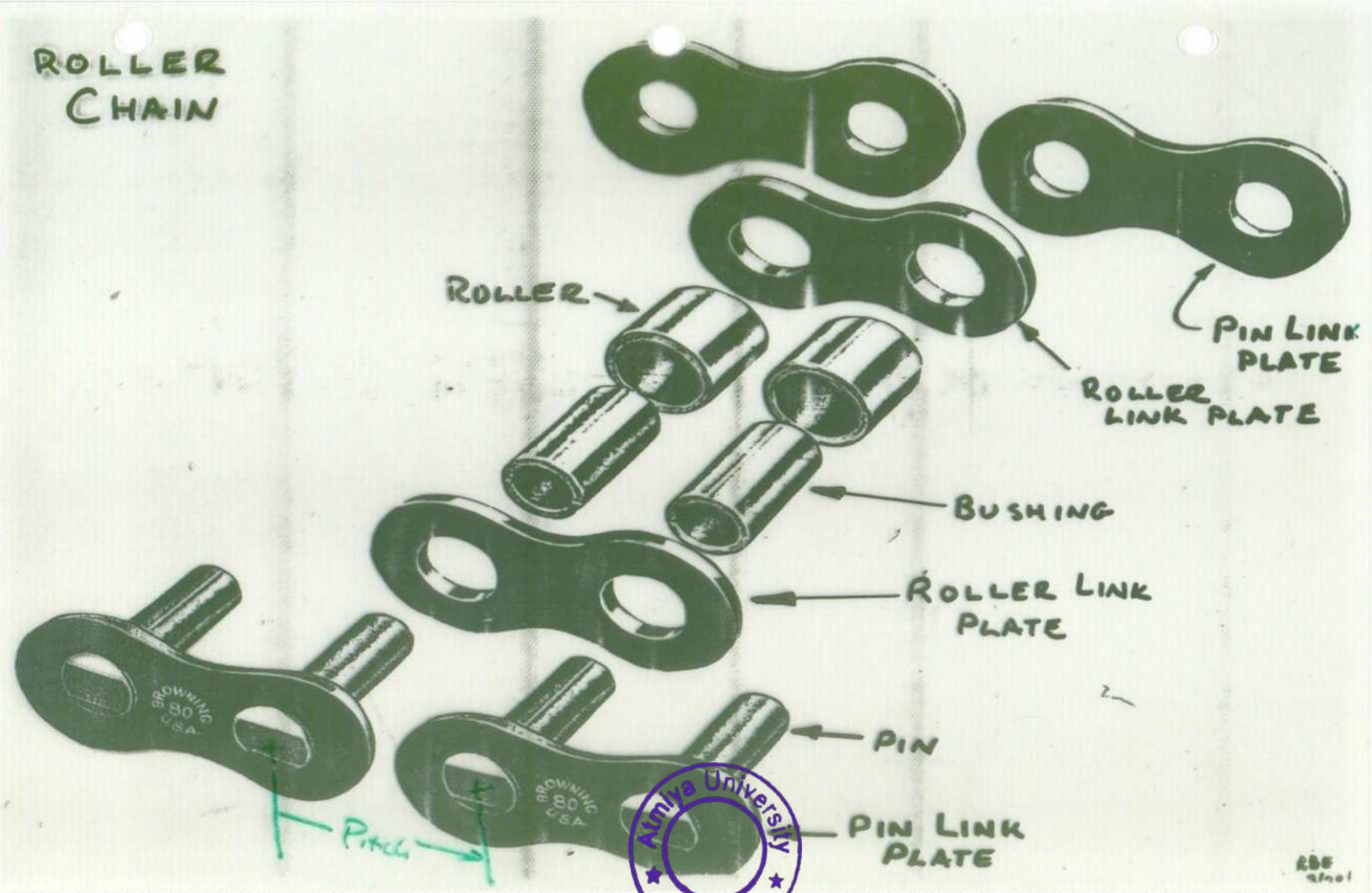

Atmiya University Rajkot

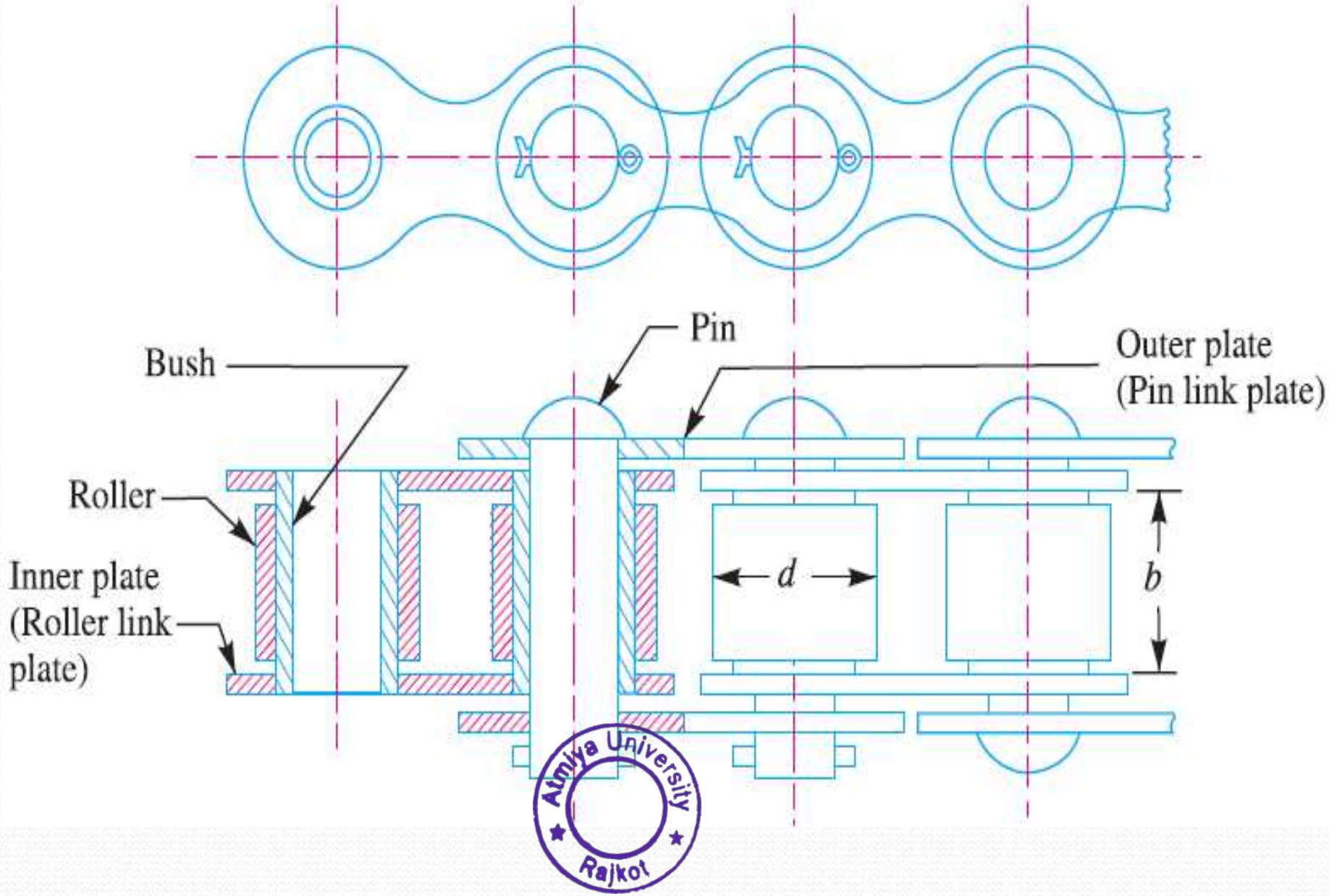

Atmiya University
Rajkot

Connecting Link
(Pin Link)

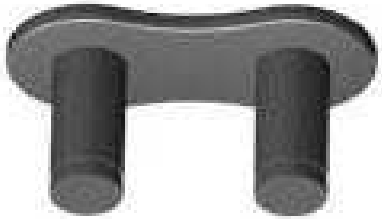

Connecting Link
(Link Plate)

Connecting Link
Retainer

Atmiya University
Rajkot

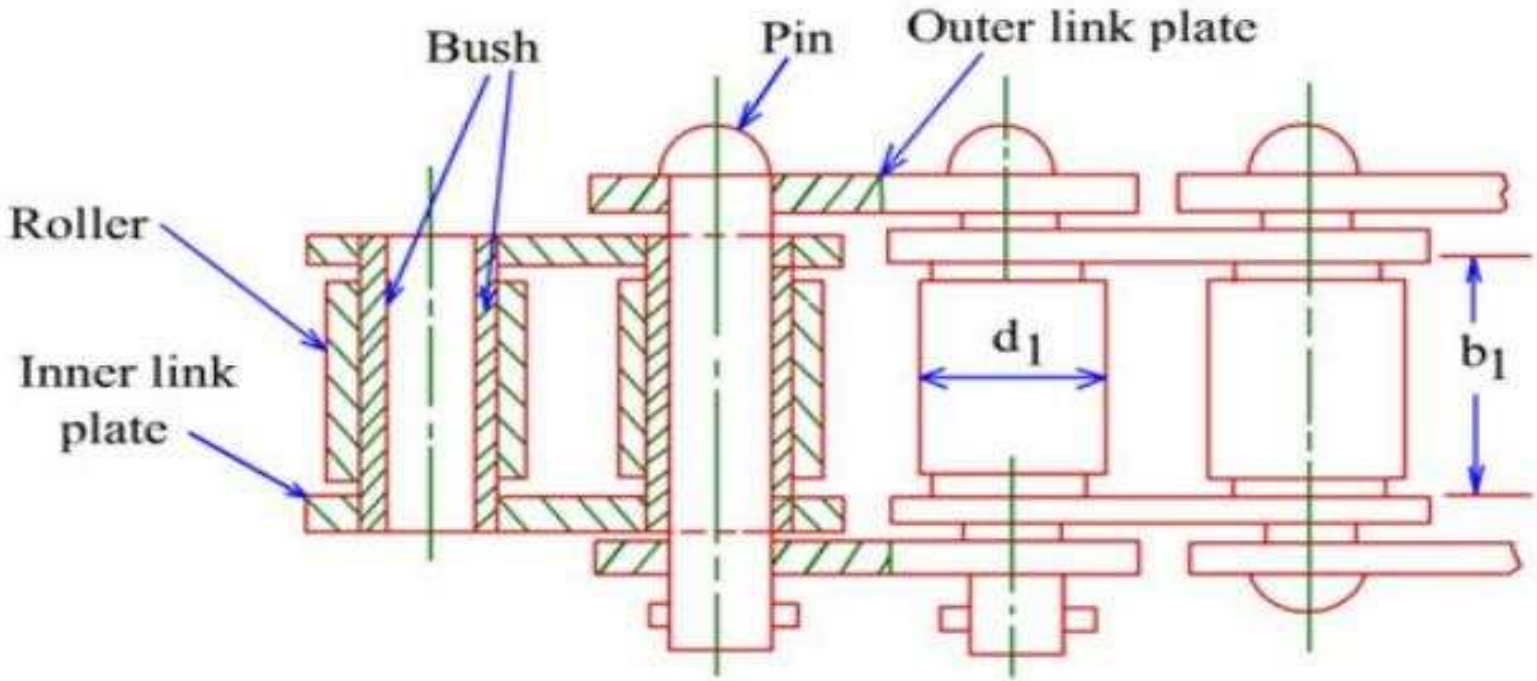

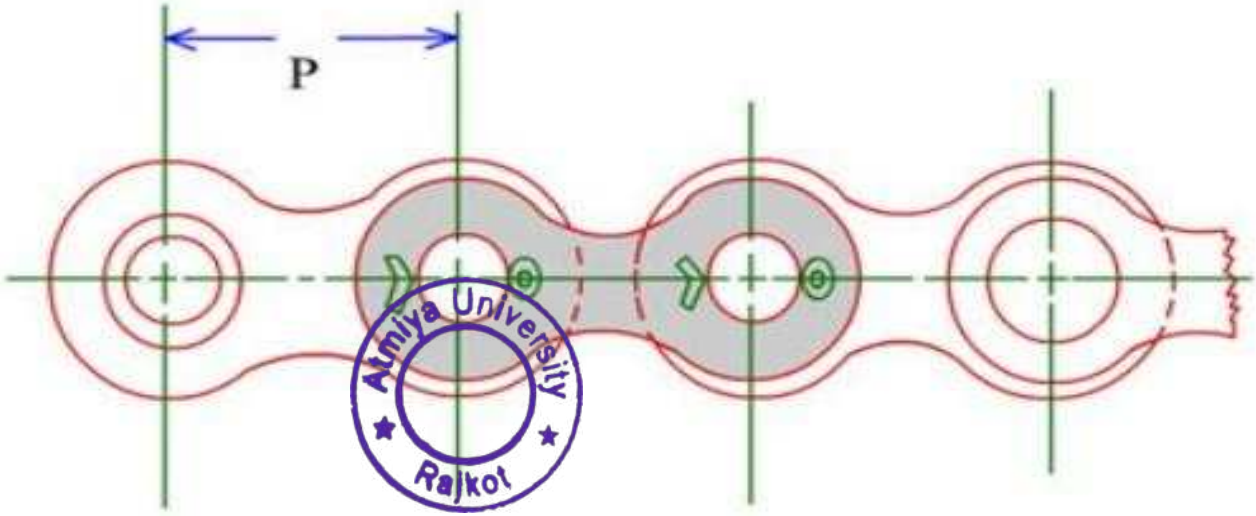

Atmiya University Rajkot

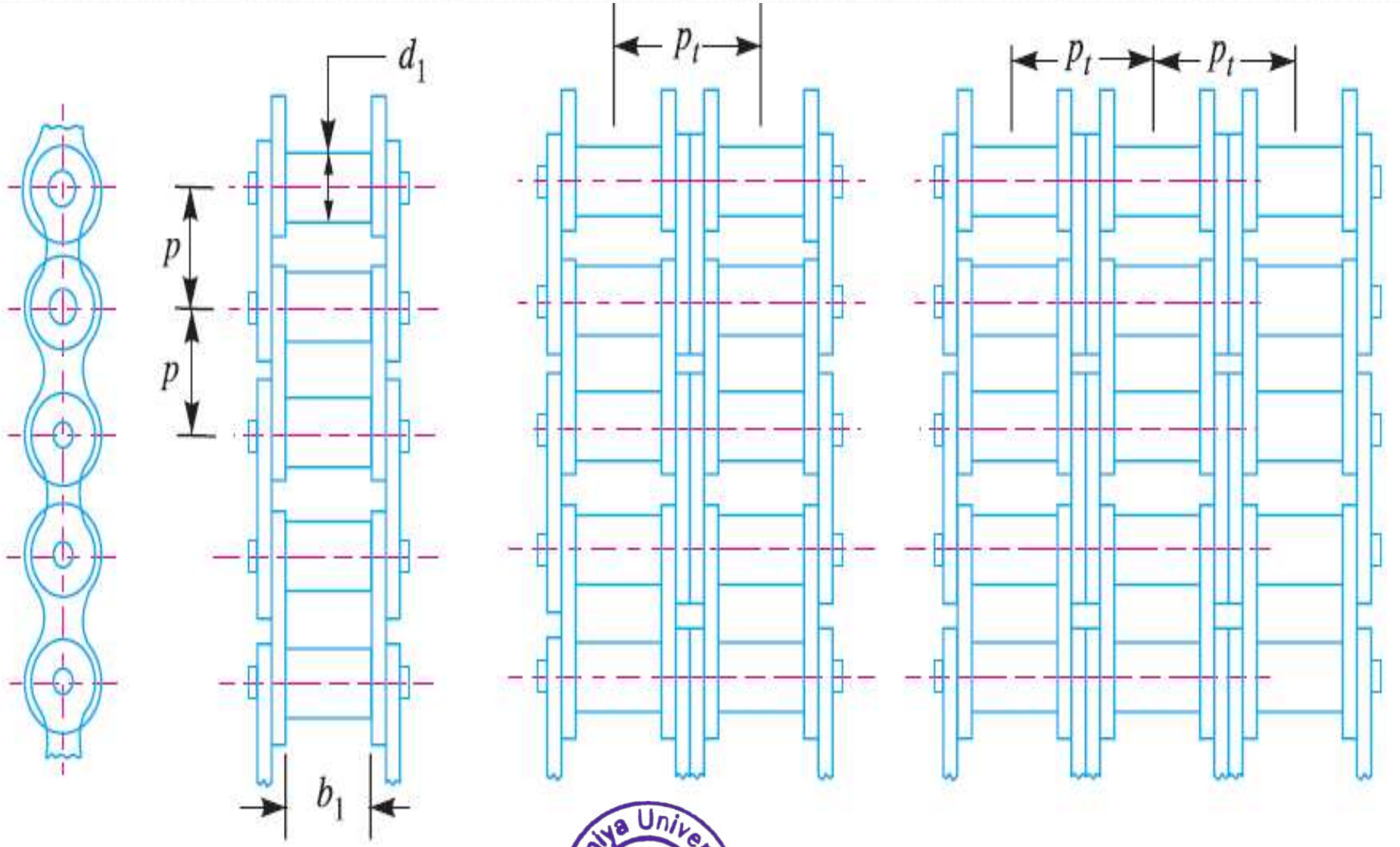

Simplex chain. Duplex chain. Triplex chain.

Atmiya University Rajkot

Polygonal Effect in Chain Drive

The number of teeth on the sprocket affects the velocity ratio during its rotation through the pitch angle. The chain passes around the sprocket as a series of chordal-links. This action is similar to a non-slipping belt wrapped around a rotating polygon. For the sack of clarity, a chain drive with sprocket having four teeth is shown in Fig.

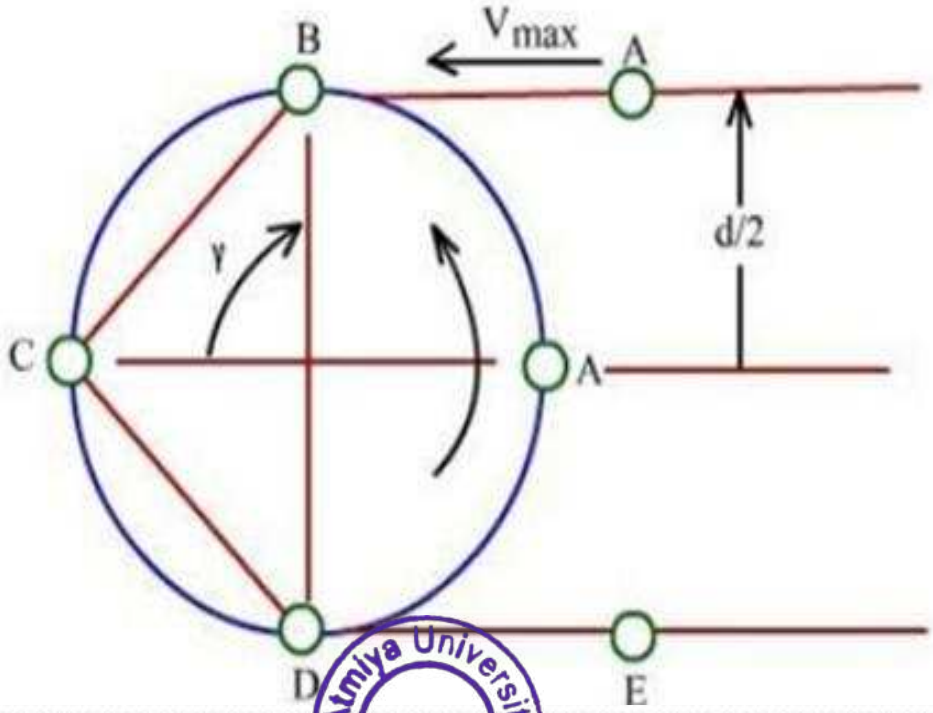

Atmiya University Rajkot

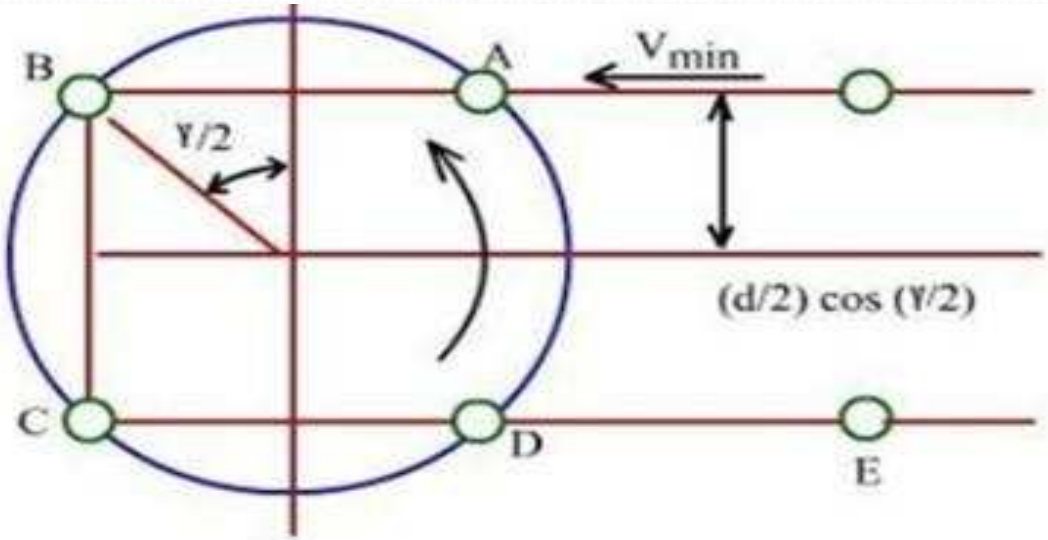

Polygonal action of chain

The sprocket having *z* number of teeth is rotating at a constant speed of *n* revolution per second. Initially, a portion of the chain is tangent to the pitch circle of the sprocket at B (Refer the figure at the top). When the sprocket is moved through an angle $\gamma/2$, the chain link AB assumes new position (horizontal; refer the figure at the bottom) and is closer to the center of the sprocket. As the chain is moving up and down, and the lever arm varies with rotation through $\gamma/2$, resulting in an uneven chain exit velocity. The chain velocity *v* is calculated as,

Atmiya University Rajkot

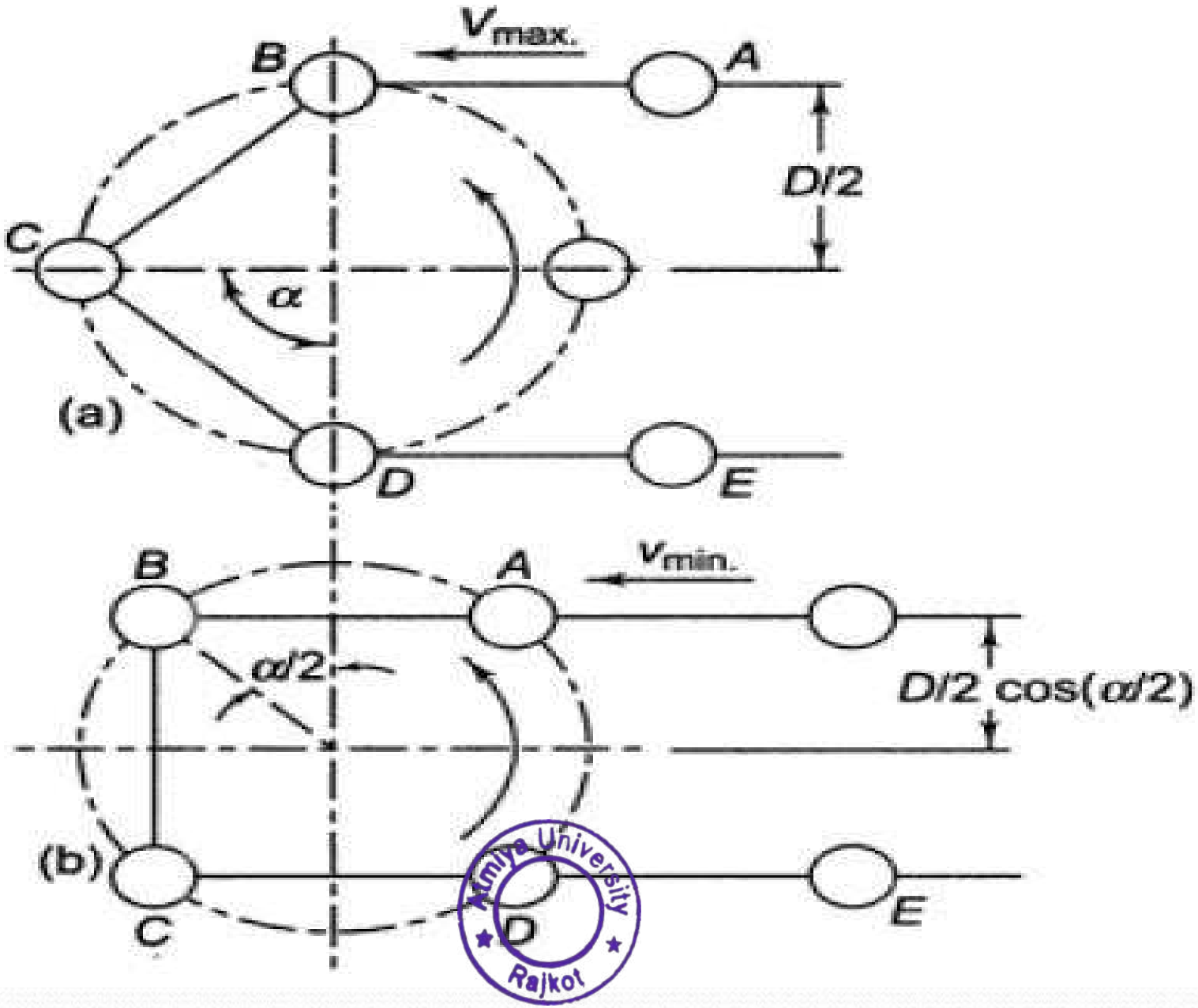

Atmiya University Rajkot

The chain passes around the sprocket as a series of chordal links. This action is similar to that of a non-slipping belt wrapped around a rotating polygon. The chordal action is illustrated in Figure 4.8, where the sprocket has only four teeth. It is assumed that the sprocket is rotating at a constant speed of n rpm. In Fig. 4.9, the chain link AB is at a distance of (D/2) from the centre of the sprocket wheel and its linear velocity is given by,

$$V_{max} = \frac{\pi D n}{60} \; m/s$$

As the sprocket rotates through an angle (α/2), the position of the chain link AB is shown in Figure 4.8. In this case, the link is at a distance of (D/2) x cos(α/2) from the centre of the sprocket and its linear velocity is given by,

$$V_{min} = \frac{\pi D n \cos\left(\frac{\alpha}{2}\right)}{60} \; m/s$$

Atmiya University Rajkot

It is evident that the linear speed of the chain is not uniform but varies from V_{max} to V_{min} during every cycle of tooth engagement. This results in a pulsating and jerky motion. The variation in velocity is given by

$$(V_{max} - V_{min}) \propto \left[1 - \cos\left(\frac{\alpha}{2}\right)\right]$$

$$(V_{max} - V_{min}) \propto \left[1 - \cos\left(\frac{180}{z}\right)\right]$$

As the number of teeth (z) increases to ∞, cos (180/z) or cos (180/∞), i.e., cos (0°) will approach unity and (V_{max} - V_{min}) will become zero. Therefore, the variation will be zero. In order to reduce the variation in chain speed, the number of teeth on the sprocket should be increased.

It has been observed that the speed variation is 4% for a sprocket with 11 teeth, 1.6% for a sprocket with 17 teeth, and less than 1% for a sprocket with 24 teeth.

For smooth operation at moderate and high speeds, it is considered a good practice to use a driving sprocket with at least 17 teeth.

From durability and noise considerations, the minimum number of teeth on the driving sprocket should be 19 or 21.

Atmiya University Rajkot

Geometric Relationships

The engagement of chain on sprocket wheel is shown in Fig. . D is the pitch circle diameter of the sprocket and α is called the pitch angle. The pitch circle diameter of the sprocket is defined as the diameter of an imaginary circle that passes through the centres of link pins as the chain is wrapped on the sprocket.

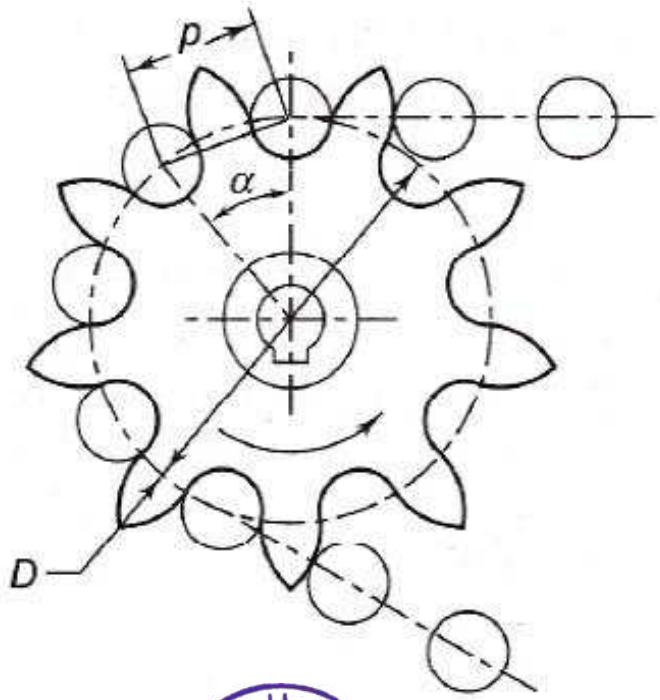

Atmiya University Rajkot

$$\alpha = \frac{360}{Z}$$

$$\sin\left(\frac{\alpha}{2}\right) = \frac{(p/2)}{(D/2)}$$

$$D = \frac{p}{\sin\left(\frac{\alpha}{2}\right)}$$

$$D = \frac{p}{\sin\left(\frac{180}{z}\right)}$$

The velocity ratio i ofthe chain drives is given by

$$i = \frac{n_1}{n_2} = \frac{z_2}{z_1}$$

Wheren_1, n_2 = speeds of rotation of driving and driven shafts (rpm)

z_1,z_2= number of teeth on driving and driven sprockets.

The average velocity of the chain is given by,

$$V = \frac{\pi D n}{60} = \frac{z p n}{60}$$

Atmiya University Rajkot

Where, V is the average velocity in m/s.

The length of the chain is always expressed in terms of the number of links, or

$$L = L_n \times p$$

Where, L = length of the chain (mm)

L_n = number of links in the chain

The number of links in the chain is by the following approximate relationships:

$$L_n = 2\left(\frac{a}{p}\right) + \left(\frac{z_1 + z_2}{2}\right) + \left(\frac{z_1 - z_2}{2\pi}\right)^2 \times \frac{p}{a}$$

where, a = centre distance between axes of driving and driven sprockets (mm)

z_1 = number of teeth on the smaller sprocket

z_2 = number of teeth on the larger sprocket

The above formula is derived by analogy with the length of the belt. The first two terms represent the number of links when ($z_1 = z_2$) and the sides of the chain are parallel. The third term takes into consideration the inclination of the sides. It is obvious that the chain should contain a whole number of links. Therefore, the number of links (L_n) is adjusted to the previous or next digit so as to get an even number. It is always preferred to have an 'even' number of links, since the chain consists of alternate pairs of inner and outer link plates.

When the chain has an odd number of links, an additional link, called 'offset' link, is provided. The offset link is, however, weaker than the main links. After selecting the exact number of links, the centre to centre distance between the axes of the two sprockets is calculated by the following formula:

$$a = \frac{p}{4}\left\{\left[L_n - \left(\frac{z_1 + z_2}{2}\right)\right] + \sqrt{\left[L_n - \left(\frac{z_1 + z_2}{2}\right)\right]^2 - 8\left(\frac{z_1 - z_2}{2\pi}\right)^2}\right\}$$

Atmiya University Rajkot

Modes of Chain Failure

There are four modes of chain failures

(i) **Wear**: The wear of the chain is caused by the articulation of pins in the bushings. The wear results in elongation of the chain, or in other words, the chain pitch is increased. This makes the chain 'ride out' on the sprocket teeth, resulting in a faulty engagement. When the elongation is excessive, it becomes necessary to replace the chain. The permissible elongation for the chain is 1.5 to 2.5%. When the chain is properly lubricated, a layer of oil film between the contacting surfaces of the pin and the bushing reduces wear.

(ii) **Fatigue**: As the chain passes around the sprocket wheel, it is subjected to a tensile force, which varies from a maximum on the tight side to a minimum on the loose side. The chain link is, therefore, subjected to one complete cycle of fluctuating stresses during every revolution of the sprocket wheel. This results in a fatigue failure of side link plates. For infinite life, the tensile stress should be lower than the endurance limit of the link plates.

(iii) **Impact**: The engagement of rollers with the teeth of the sprocket results in impact. When excessive, this may lead to the breakage of roller or bushing. Increasing the number of teeth on the sprocket or reducing chain tension and speed reduces the magnitude of the impact force.

(iv) **Galling**: Galling is a stick-slip phenomenon between the pin and the bushing. When the chain tension is high, welds are formed at the high spots of the contacting area. Such microscopic welds are immediately broken due to relative motion of contacting surfaces and leads to excessive wear, even in the presence of the lubricant.

Atmiya University Rajkot

Design of Bearings

Design of Transmission Systems (DTS)
(21BTMECC404)

Unit - II

Design of Bearings

Prepared By:- Shivang S. Jani
Asst. Professor
Mechanical Engineering Department

BEARINGS

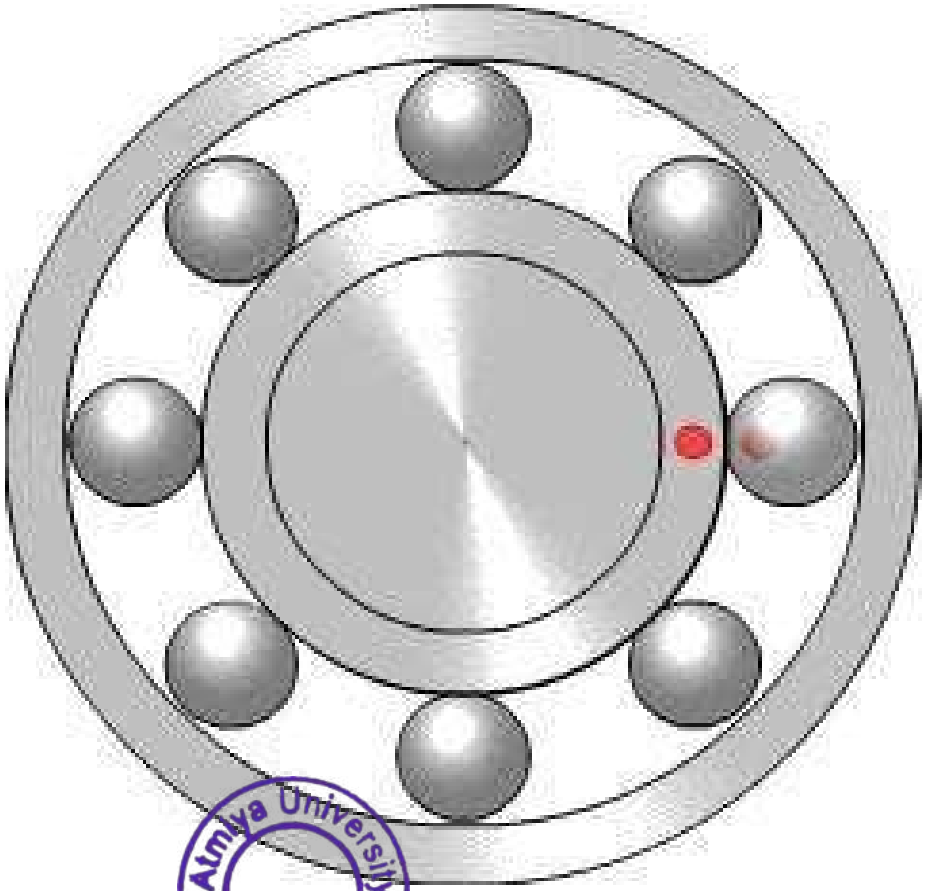

Atmiya University
Rajkot

BEARING DEFINITION & FUNCTION

- A bearing is a mechanical element that permits the relative motion between two parts, such as shaft & the housing, with minimum friction.
- The Function of bearing are as follows:-
- The bearing ensures free rotation of the shaft or the axle with minimum friction.
- The bearing supports the shaft or the axle and holds it in correct position.
- The bearing takes up the forces or the loads that act on the shaft or the axle and transmits them to the frame or the foundation.

Atmiya University Rajkot

CLASSIFICATION OF BEARING BASED ON FORCE ACTS ON THEM

1. Radial Bearings:- A radial bearing supports or take the load in radial direction which is perpendicular to the axis of the shaft.

2. Thrust Bearings(axial bearing):- A thrust bearing supports or take the load in axial direction which acts along to the axis of the shaft.

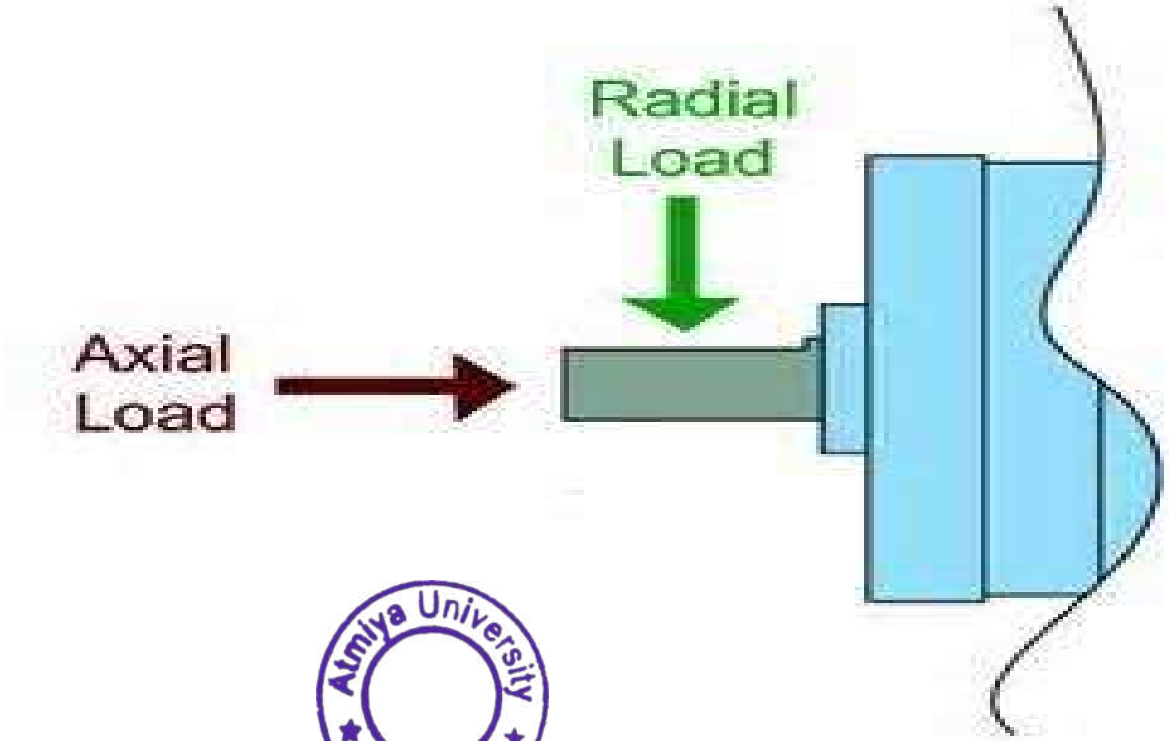

Atmiya University
Rajkot

CLASSIFICATION OF BEARING BASED ON FRICTION BETWEEN THE SHAFT AND BEARING SURFACE.

1. SLIDING CONTACT BEARING OR JOURNAL BEARING OR PLAIN BEARING OR SLEEVE BEARING

- ✓ In sliding contact bearing the shaft slides inside the surface of bearing resulting in friction and wear.
- ✓ In order to reduce the friction and wear these two surfaces are separated by a film of lubricating oil.

2. ROLLING CONTACT BEARING OR ANTI FRICTION BEARING

- ✓ It is also known as Anti Friction bearing or simply a ball bearing.
- ✓ Rolling elements such as balls or rollers are introduced between the surfaces that are in relative motion.

Atmiya University Rajkot

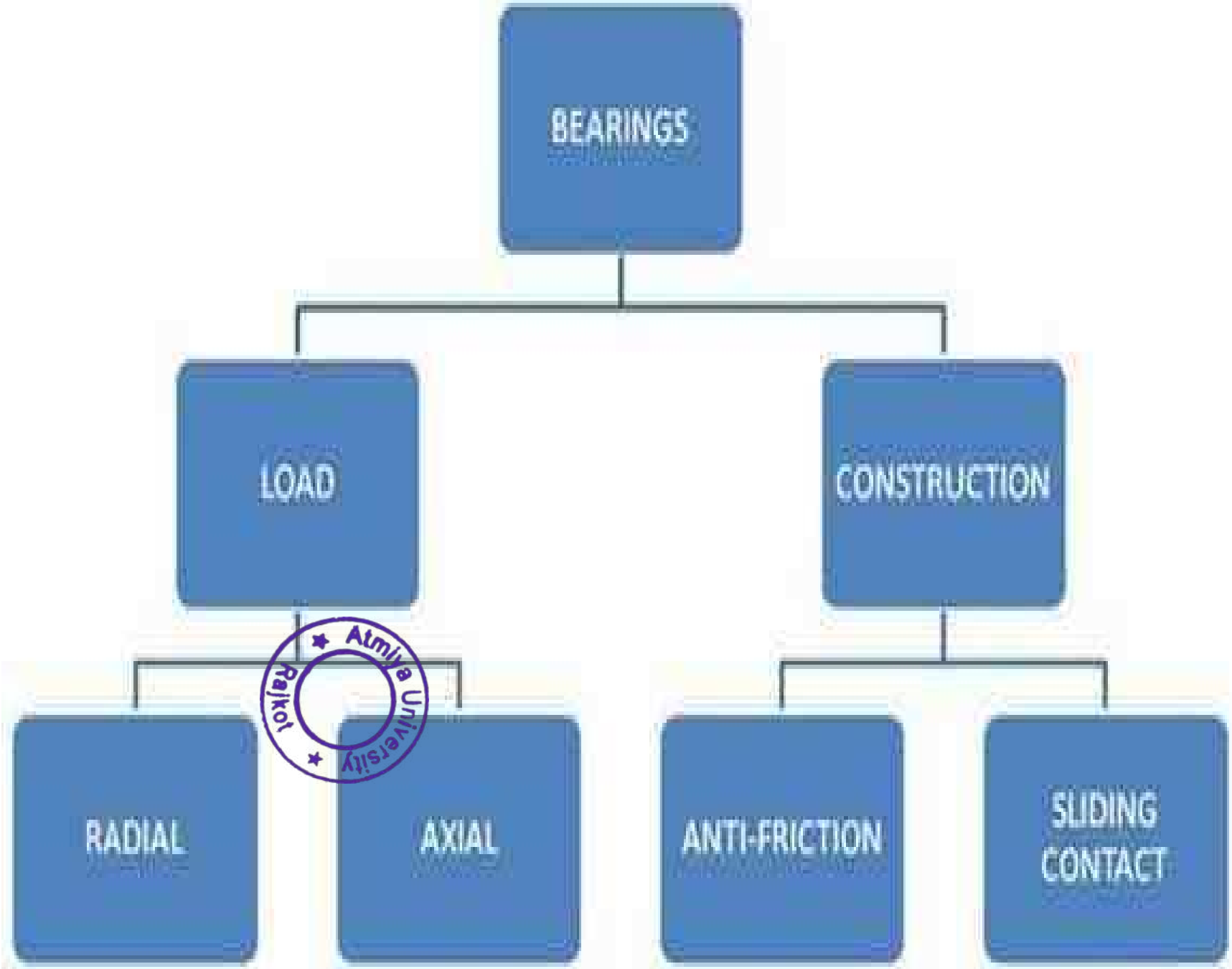

Atmiya University Rajkot

Con't

- Plain bearing is a simple cylinder made to fit around the **journal** or a shaft. Lubricant film separates the bearing surface from the journal.
- Plain bearings are usually made of relatively **soft material** and therefore it does not scratch the shaft.
- Plain bearings are used mainly to support **low speed** shafts carrying **heavy loads**.

Atmiya University Rajkot

- Sliding Contact bearings:- Load is transferred through a thin film of lubricant (oil).
- Rolling Contact bearings:- Load is transferred through rolling elements such as balls, tapered, straight & spherical rollers.

Atmiya University
Rajkot

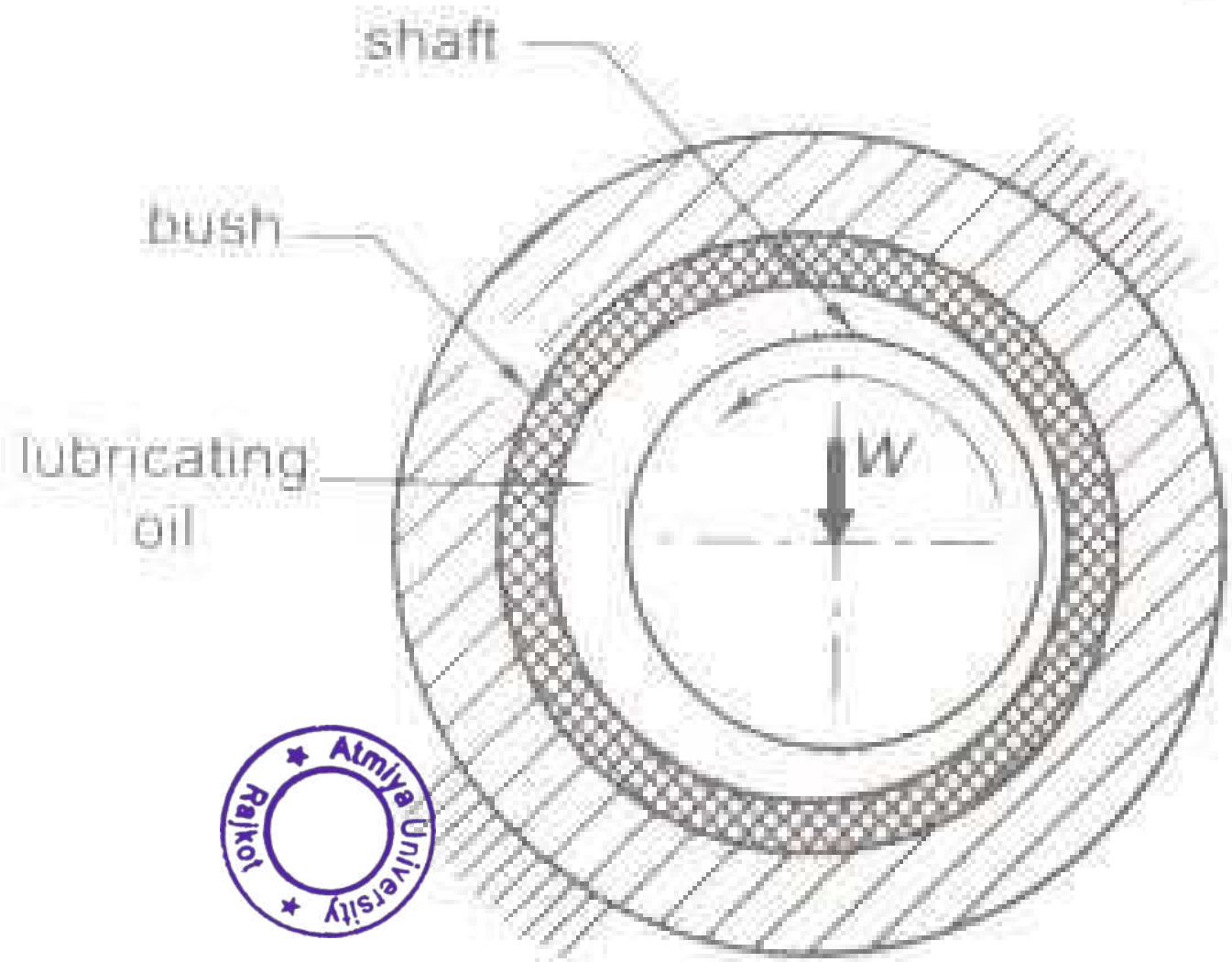

(a) Sliding contact bearing

Atmiya University Rajkot
Atmiya University Rajkot

Sliding contact bearing Construction

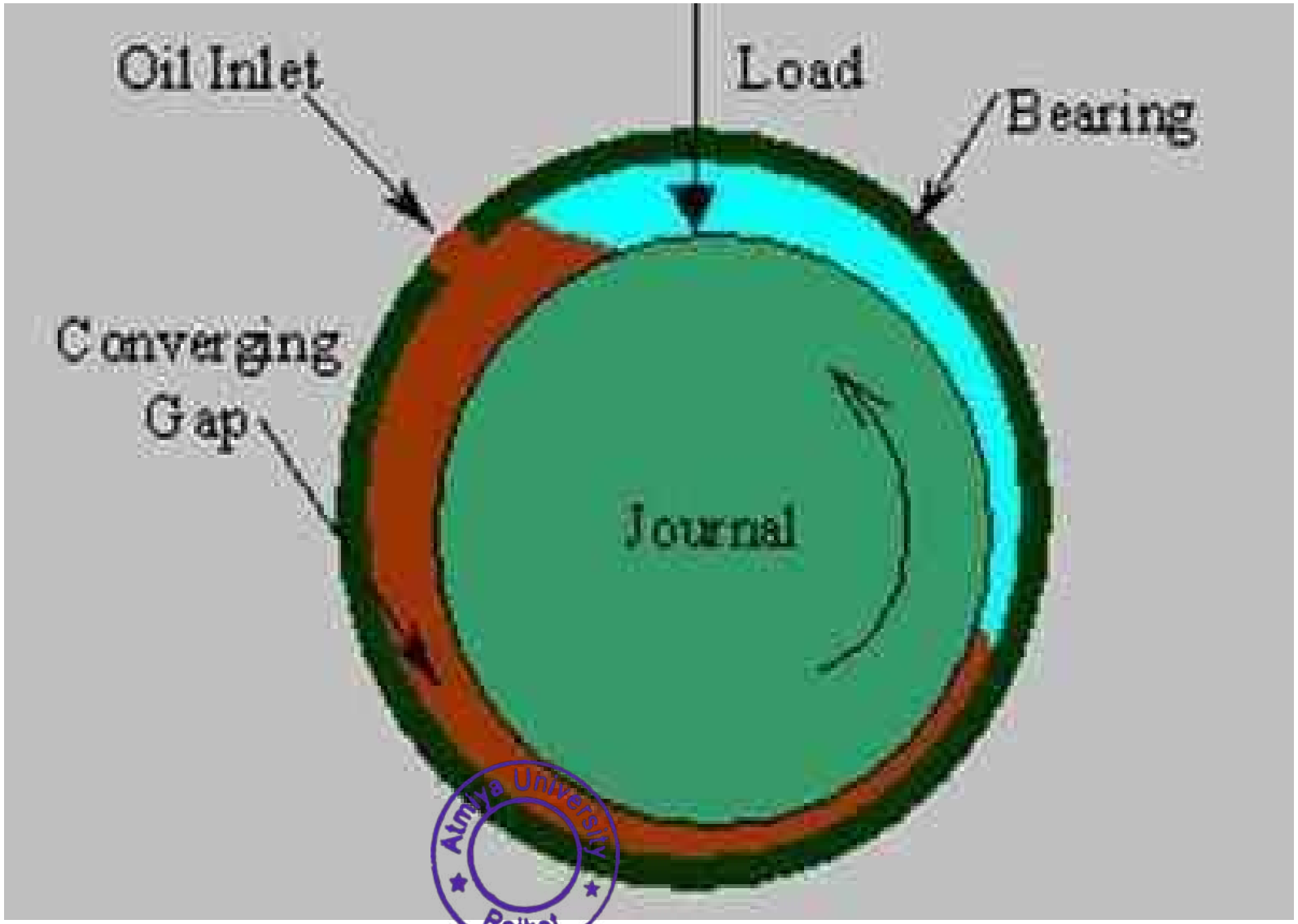

Atmiya University
Rajkot

Rolling Contact Bearing Construction

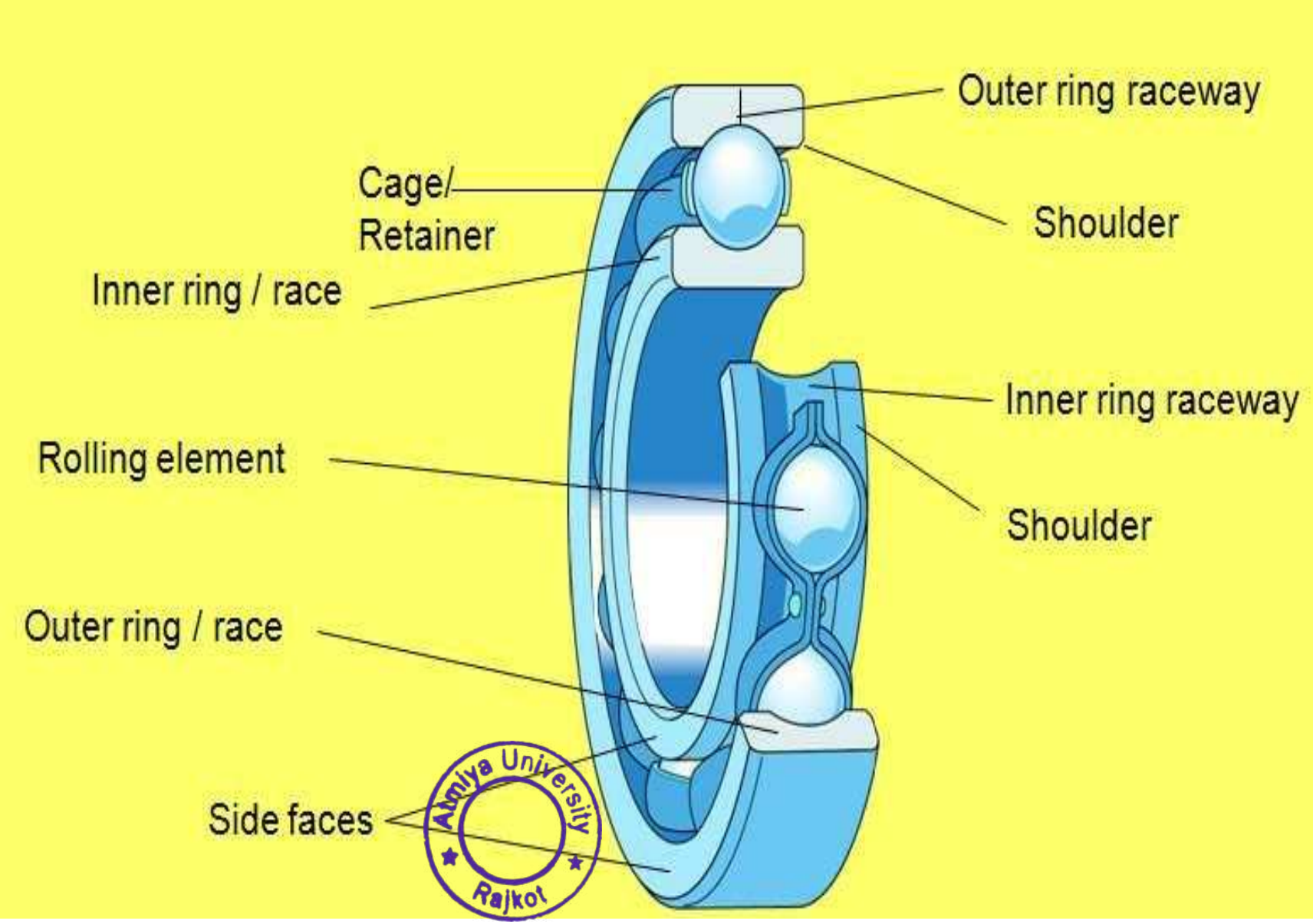

Amiya University
Rajkot

- Ball Bearing
  - Incorporates hardened steel balls
  - Steel balls geometrically contact inner and outer race at a point
  - This creates high stresses locally

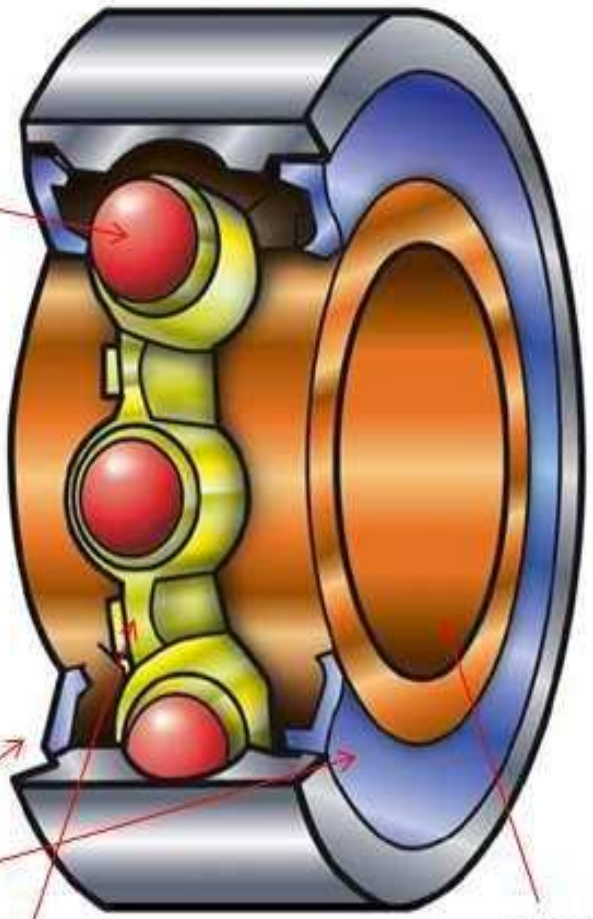

Atmiya University Rajkot
Atmiya University Rajkot

Bearing Diameter

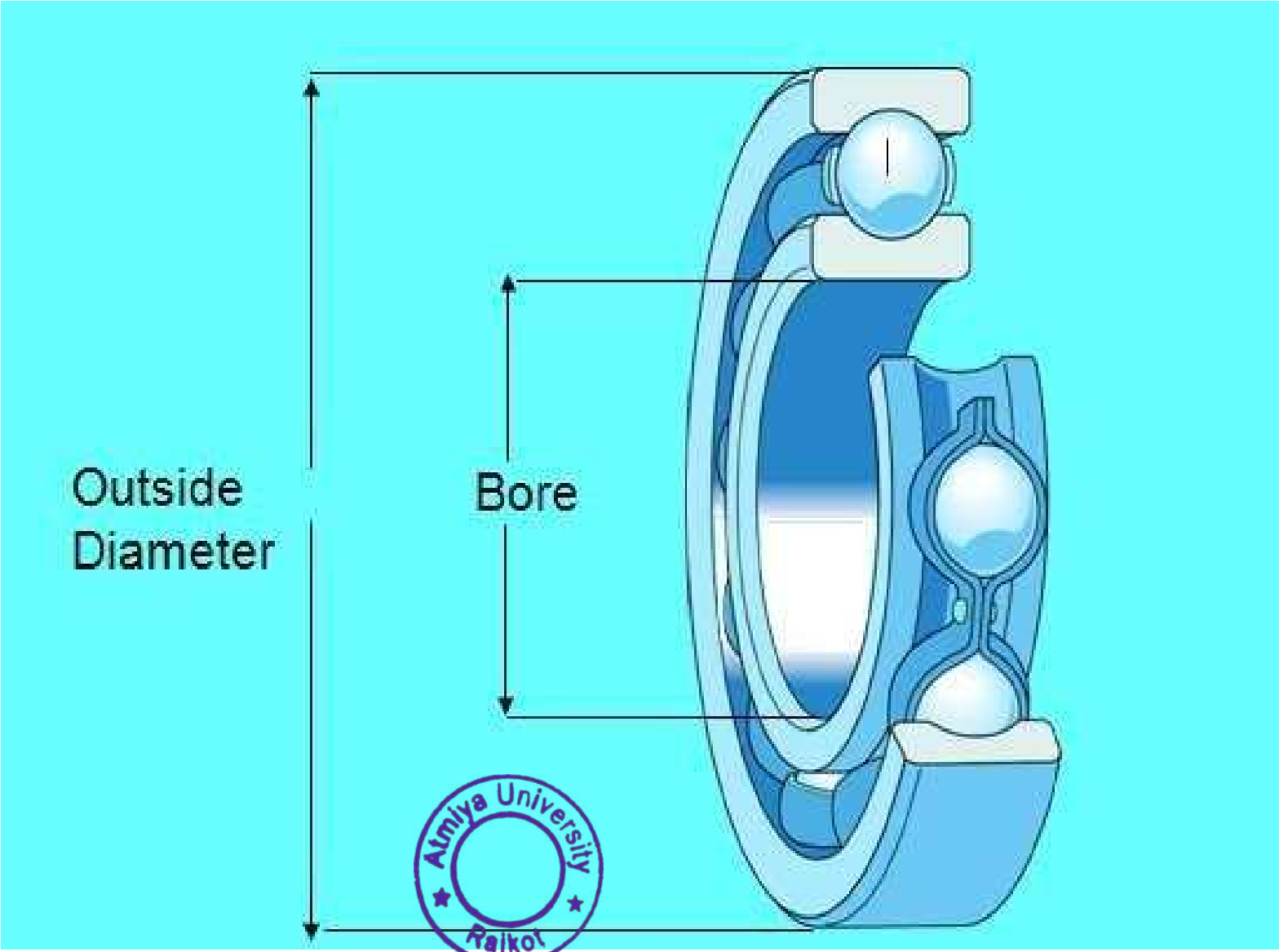

Atmiya University
Rajkot

Exploded View of Rolling Contact Ball Bearing

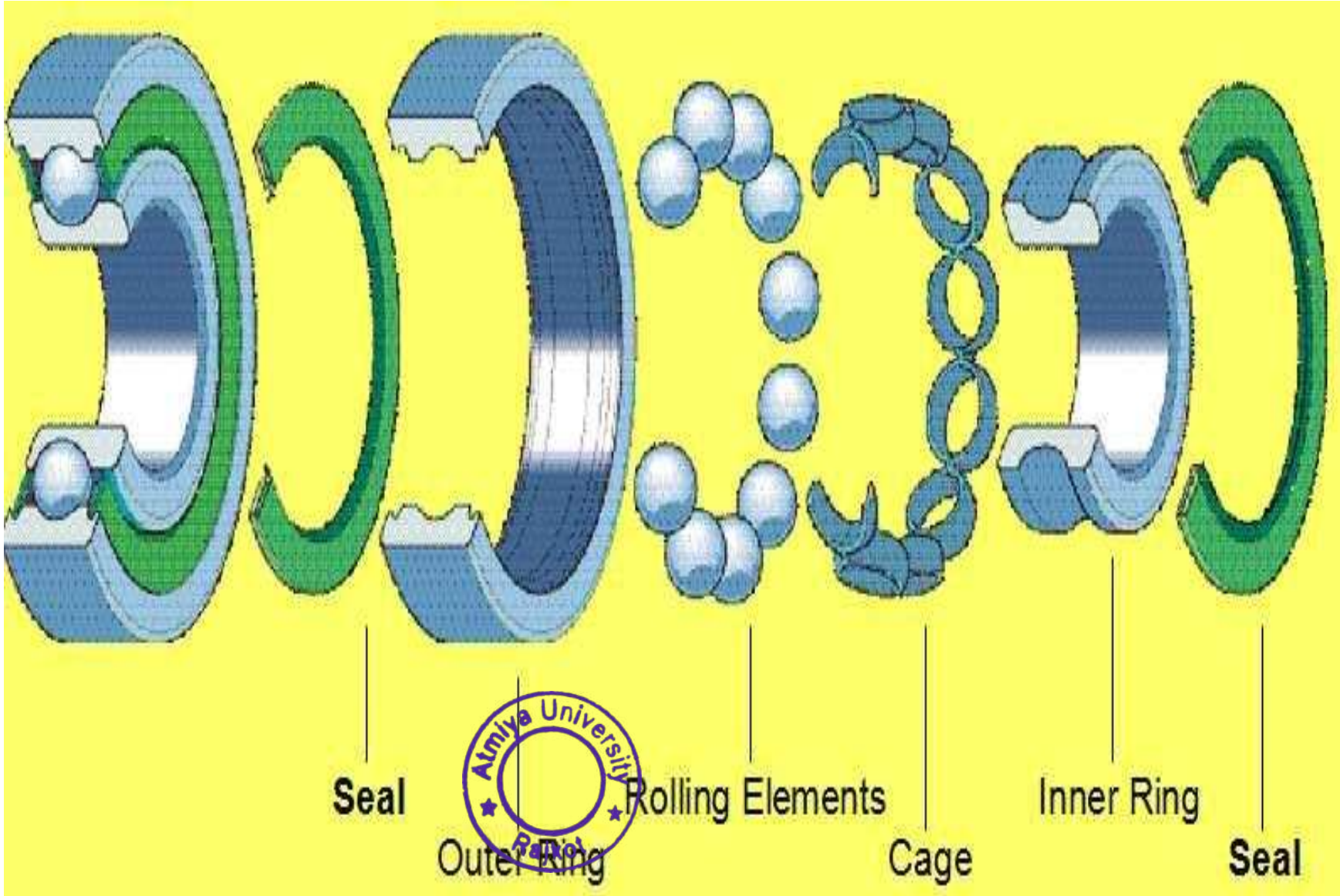

Atmiya University Rajkot

Cylindrical Roller Contact Bearing

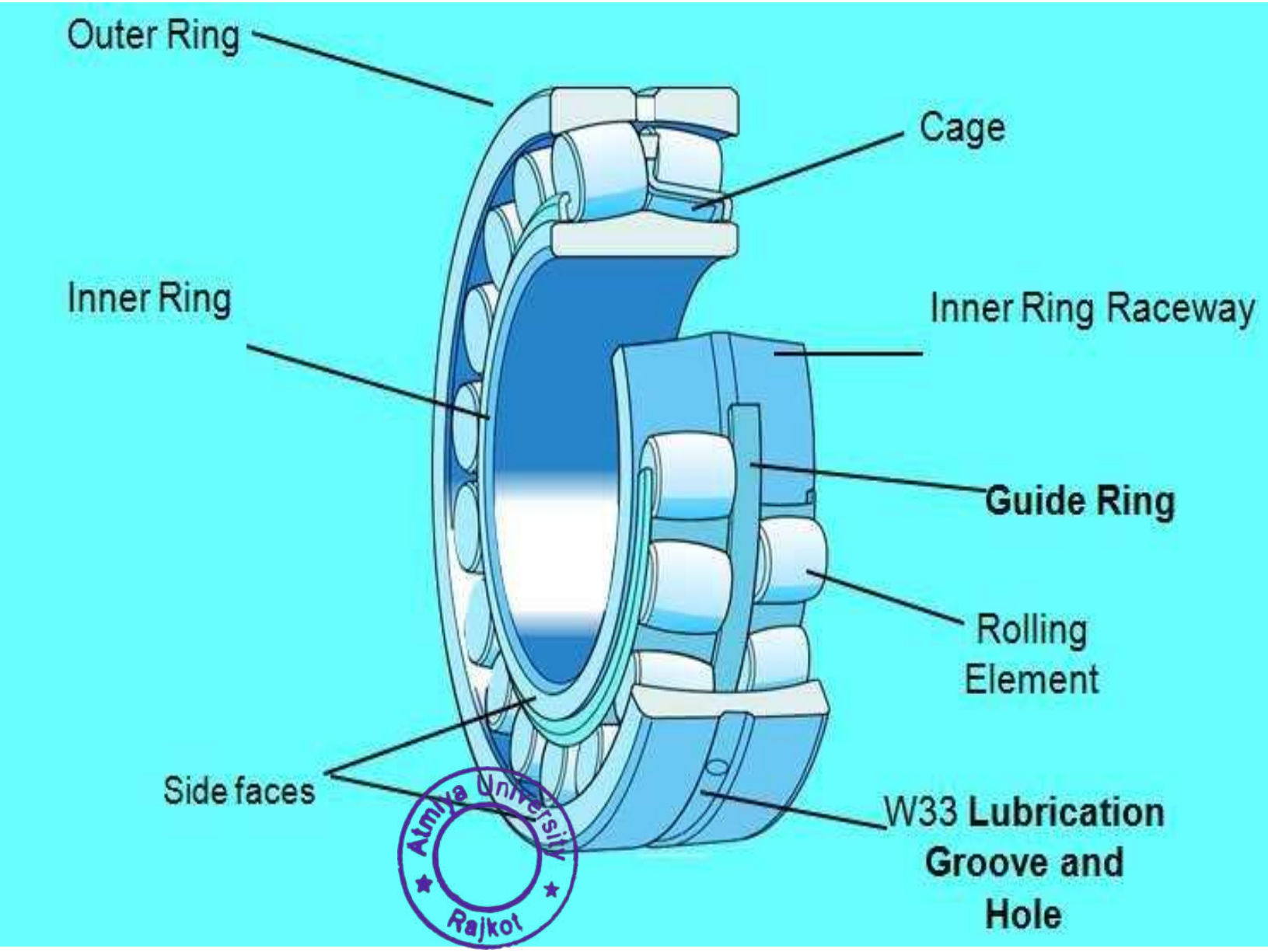

Atmiya University Rajkot

Various Rolling Elements

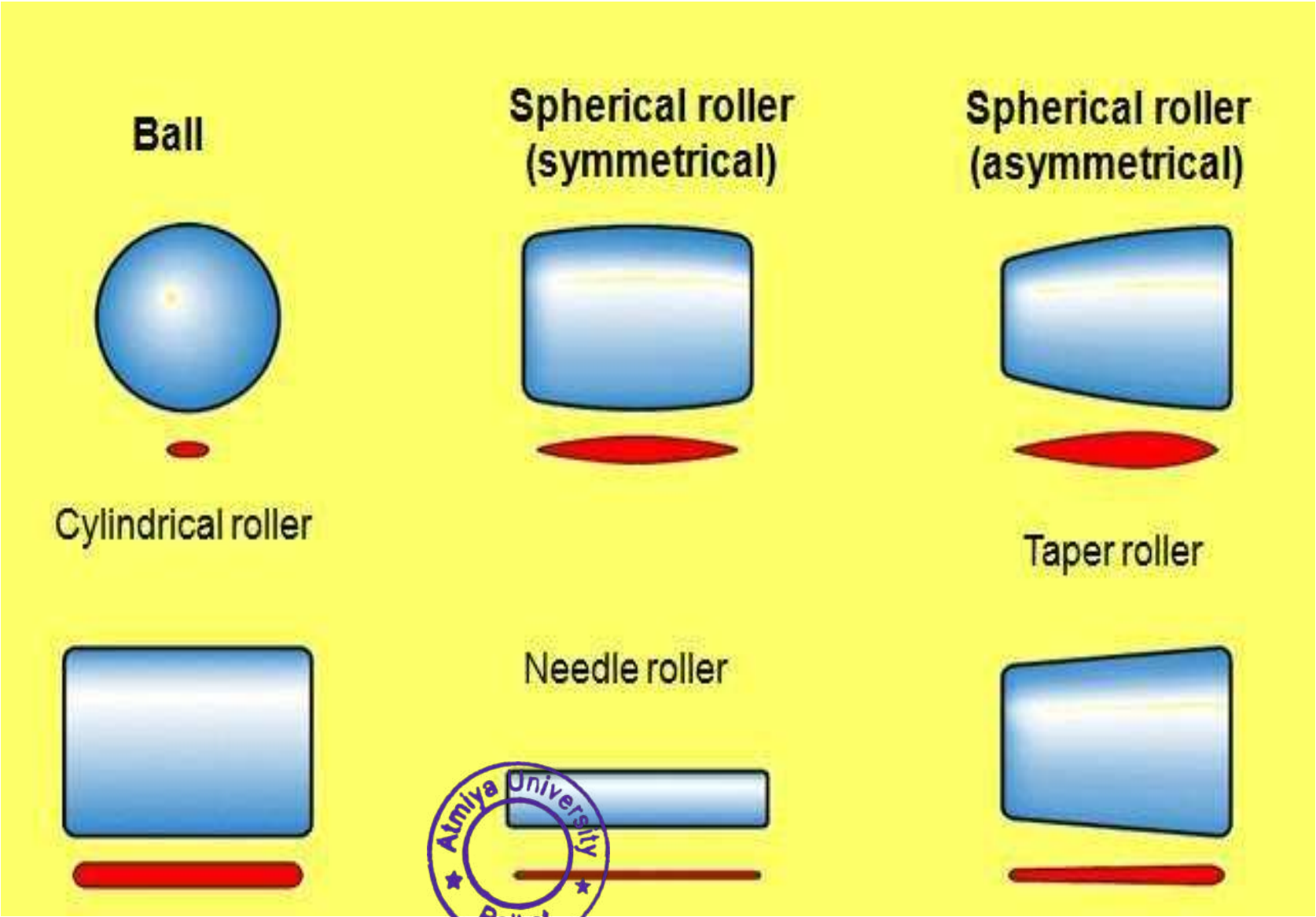

Atmiya University Rajkot

Point & Line Contact in Rolling Contact Bearing

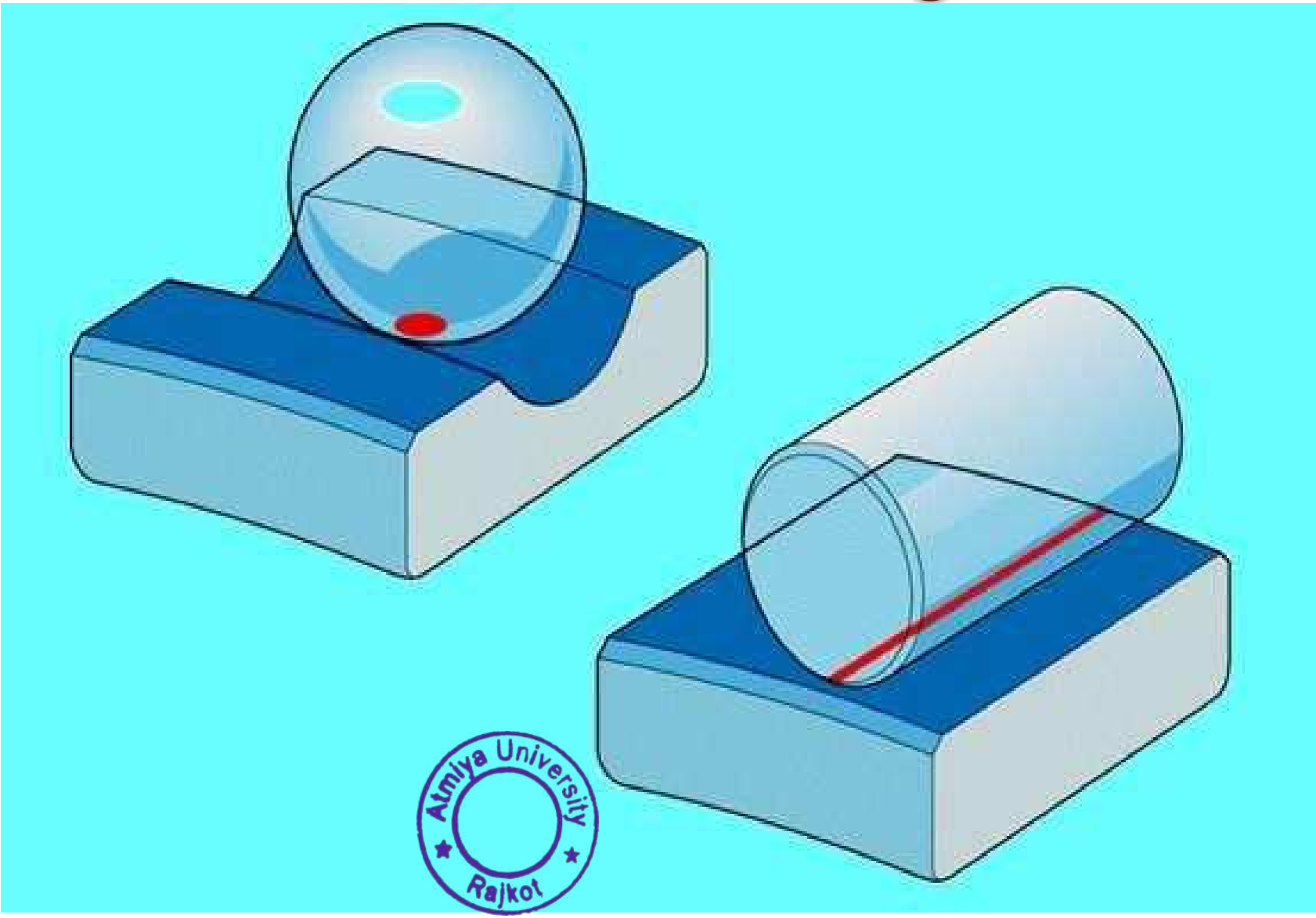

Applications of Sliding Contact Bearing

- **Sliding contact Bearing:-**
  - Crank shaft bearing in Petrol & Diesel engines.
  - Centrifugal Pumps
  - Large Size Electric motors
  - Steam & Gas turbines.
  - Concrete mixer, Rope Conveyor & Marine installations.

Atmiya University Rajkot

Rolling Contact Bearing Applications

- **Rolling Contact Bearings:-**
- Machine Tool Spindles
- Automobile Front & Rear Axles
- Gear boxes
- Small size electric motors

Atmiya University Rajkot

Types of Rolling Contact Bearing

- ✓ Deep Groove Ball Bearing
- ✓ Cylindrical Roller Bearing
- ✓ Angular Contact Bearing
- ✓ Self-Aligning Bearing
- ✓ Taper Roller Bearing
- ✓ Thrust Ball Bearing
- ✓ Needle Roller Bearing
- ✓ Spherical Roller Bearing

Atmiya University
Rajkot

Lubrication

- **Lubrication**:- It is the science of reducing friction by application of a suitable substance called lubricant, between the rubbing surfaces of bodies having relative motion.
- **Classification of Lubricants:-**

1. Liquid Lubricants (e.g – Mineral oils or vegetable oils)
2. Semi-Solid Lubricants (e.g- grease)
3. Solid Lubricants (e.g- graphite & molybdenum disulphide)
4. Gaseous Lubricants

- **Objectives of Lubrication:-**

1) To reduce friction
2) To reduce or prevent wear
3) To carry away heat generated due to friction
4) To protect the journal and the bearing from corrosion

Atmiya University Rajkot

LUBRICANT PROPERTIES

- It should give rise to low friction.
- It should adhere to the surface and reduce the wear.
- It should protect the system from corrosion.
- It should have good cleaning effect on the surface.
- It should carry away as much heat from the surface as possible.
- It should have oxidative stability.
- It should have good thermal conductivity.
- It should be compatible with seal materials.
- It should be cheap and available in plenty.

Atmiya University
Rajkot

LUBRICANT FOR JOURNAL BEARING APPLICATION

- **Recommended Lubricants for the Bearing Application :-**

1. SAE 10 – spindle oil for light loaded bearings and high speeds.
2. SAE 20 – 40 – Machine oil for bearings of IC engines, machine tools, turbines etc.
3. SAE40-50 – Machine oil for diesel engines heavy load and medium speeds.
4. SAE 60-70 – machine oil for high temperature, heavy load and low speeds.

Atmiya University Rajkot

Modes of lubrication

1. Thick Film Lubrication
2. Thin Film Lubrication
3. Elastohydrodynamic lubrication
4. Solid film lubrication

- Thick Film Lubrication:- It describes the condition of lubrication, where the two surfaces of the bearing in relative motion are completely separated by a fluid film.
- Viscosity of lubricant affects the performance of bearing.

Atmiya University Rajkot

- ✓ Thick Film lubrication are further classified into two groups:-
- ✓ 1. Hydrodynamic lubrication
- ✓ 2. Hydrostatic lubrication
- ➢ Hydrodynamic lubrication:- It is defined as the system of lubrication in which the load supporting fluid film is created by the shape and relative motion of the sliding surfaces.
- ➢ Principle of hydrodynamic bearing:-
- ✓ Initially the shaft is at rest as shown in fig.(a) under the action of load W.
- ✓ As the journal start to rotate, it will climb the bearing surface as shown in fig. (b)
- ✓ As the speed is increasing it will force the fluid into the wedge shaped region as shown in fig. (c)

Atmiya University Rajkot

- Since more and more fluid is forced in to wedge shaped clearance space, pressure is generated within the system.
- The pressure distribution around the periphery of the journal bearing is shown in fig.
- Since the pressure is created within the system due to rotation of shaft, this type of bearing is also known as self-acting bearing.
- The pressure generated in the clearance space supports the external load W.
- This mode of lubrication is seen in the bearing mounted on engines & centrifugal pumps.
- A journal bearing is a sliding contact bearing working on hydrodynamic lubrication and which supports the load in any radial direction.

Atmiya University Rajkot

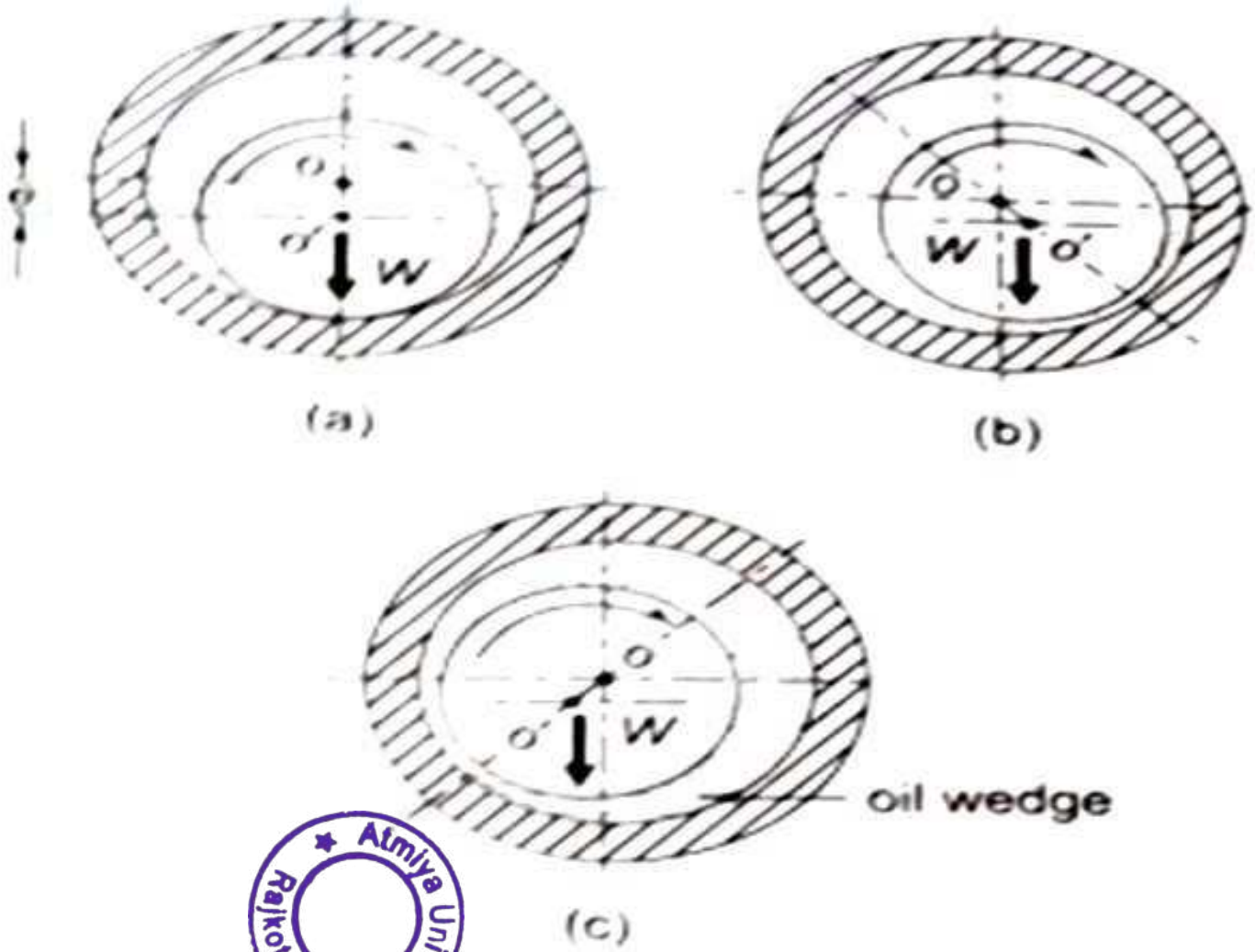

Atmiya University Rajkot

Atmiya University Rajkot

Hydrodynamic Lubrication
(a) Journal at Rest
(b) Journal starts to Rotate
(c) Journal at Full speed

Pressure distribution

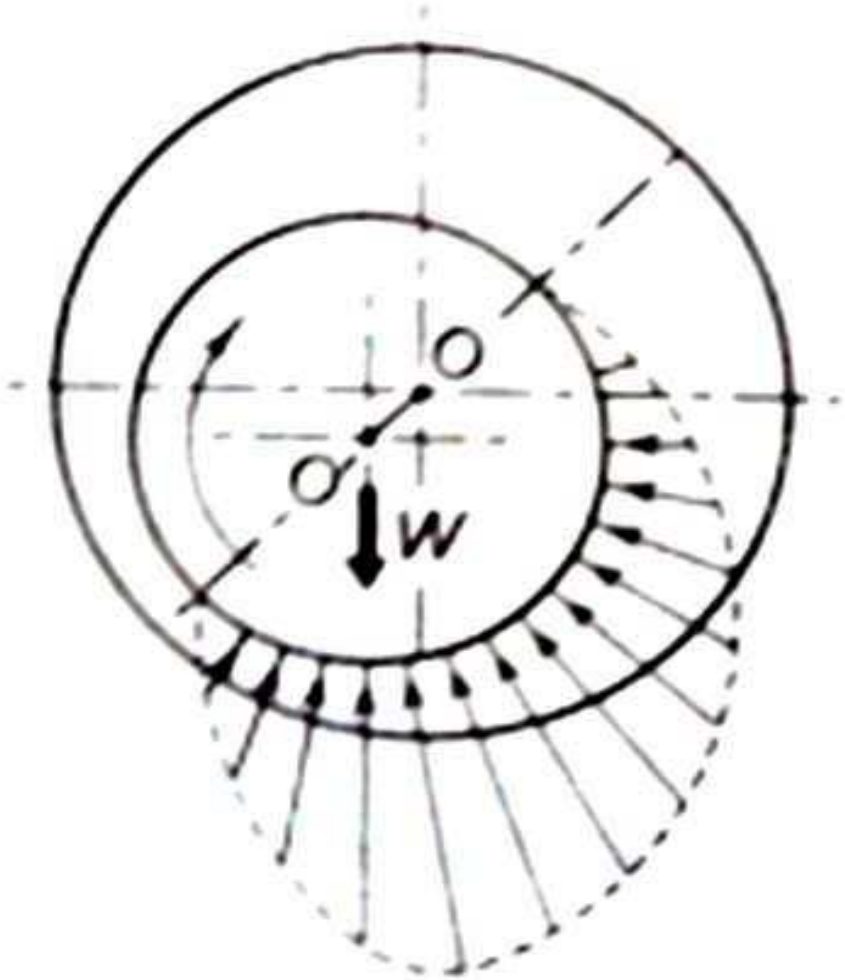

Pressure Distribution in Hydrodynamic Bearing

Atmiya University Rajkot

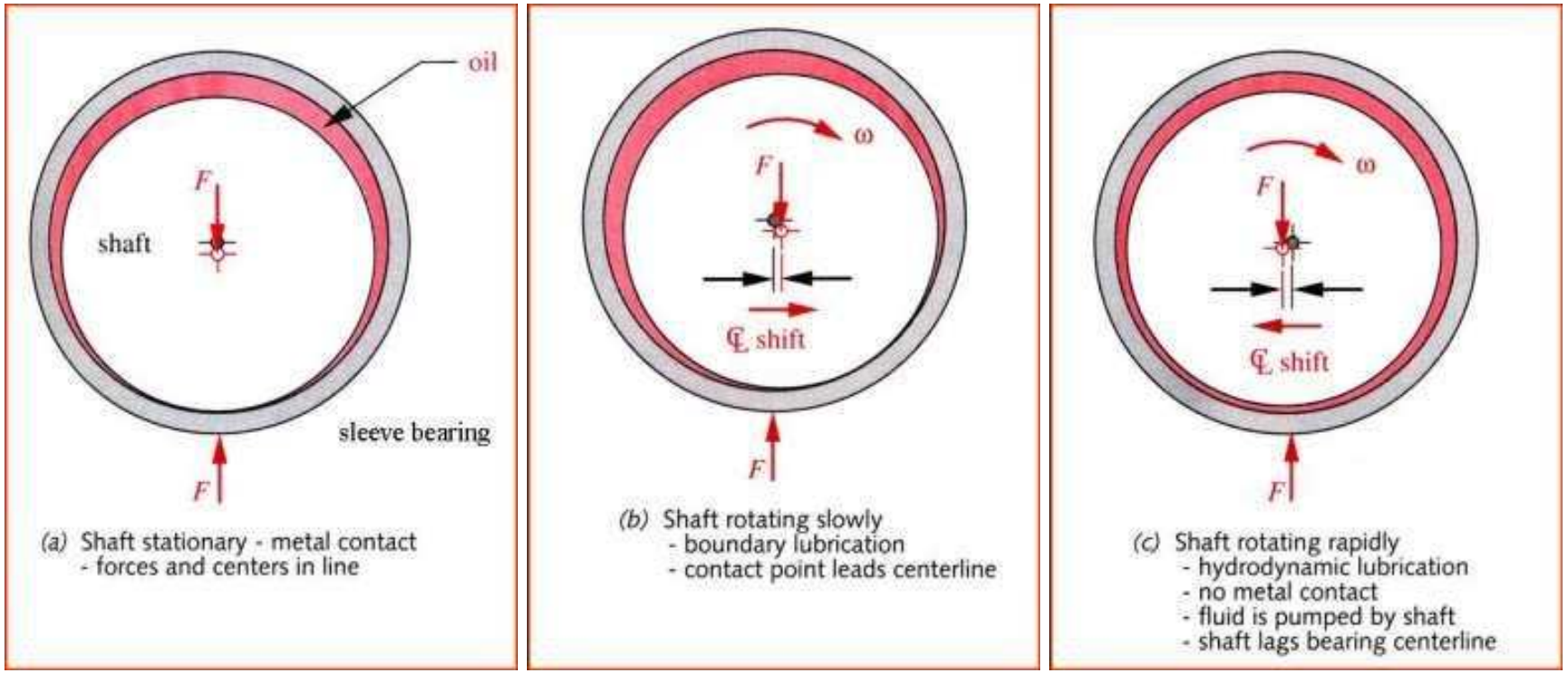

Atmiya University Rajkot

Atmiya University Rajkot

Classification of Hydrodynamic bearing

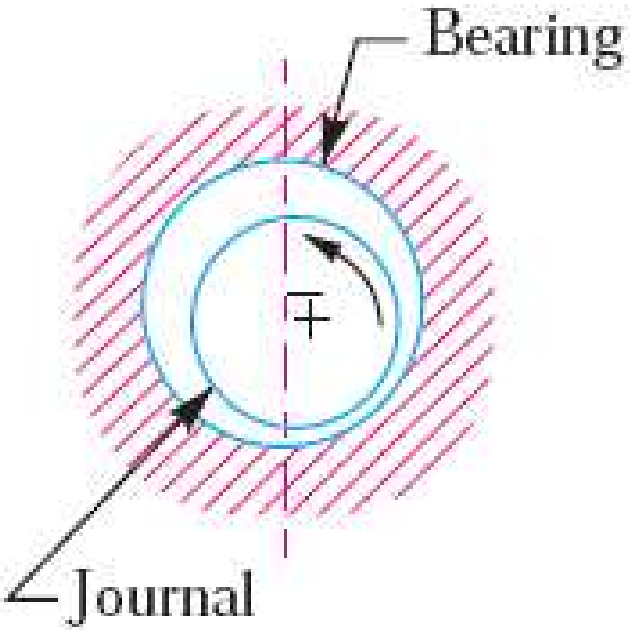

(*a*) Full journal bearing.

The sliding contact bearings in which the sliding action is along the circumference of a circle or an arc of a circle and carrying radial loads are known as ***journal or sleeve bearings. When the angle*** of contact of the bearing with the journal is 360° as shown in Fig. (*a*), *then the bearing is called* a ***full journal bearing. This type of bearing is commonly used in industrial machinery to accommodate*** bearing loads in any radial direction.

Atmiya University Rajkot

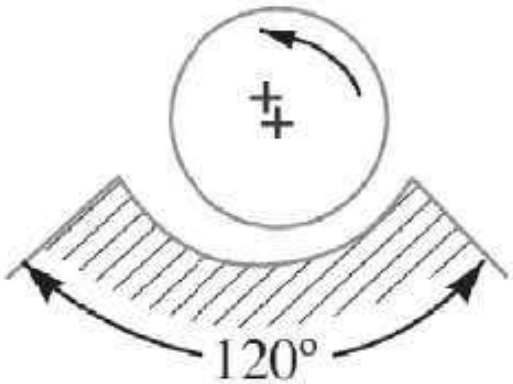

(*b*) Partial journal bearing.

When the angle of contact of the bearing with the journal is 120°, as shown in Fig. (*b*), *then* the bearing is said to be ***partial journal bearing.*** This type of bearing has less friction than full journal bearing, but it can be used only where the load is always in one direction.

The most common application of the partial journal bearings is found in rail road car axles.

The full and partial journal bearings may be called as ***clearance bearings because the diameter of the journal is less than that of*** bearing.

Atmiya University Rajkot

Atmiya University Rajkot

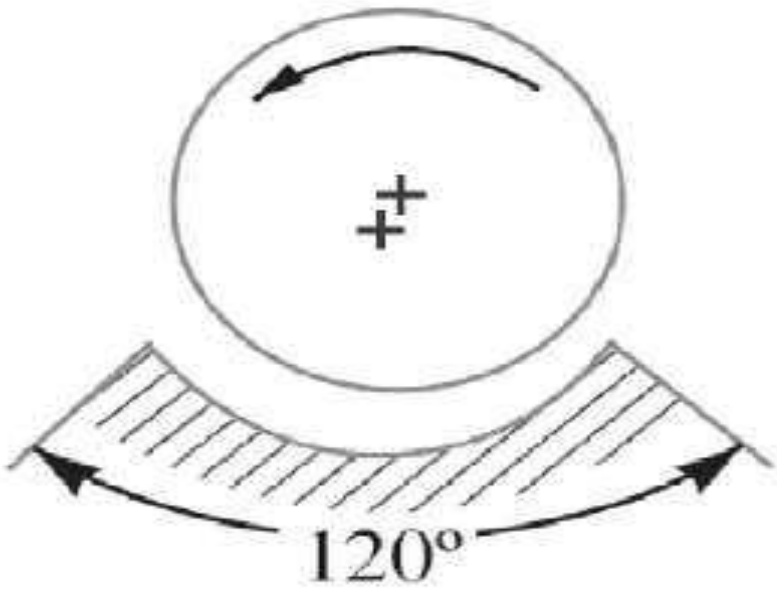

(*c*) Fitted journal bearing.

When a partial journal bearing has no clearance *i.e. the diameters of the journal and bearing are* equal, then the bearing is called a ***fitted bearing, as shown in Fig. (c)***

Atmiya University Rajkot

The sliding contact bearings, according to the thickness of layer of the lubricant between the bearing and the journal, may also be classified as follows :

1. ***Thick film bearings.*** The thick film bearings are those in which the working surfaces are completely separated from each other by the lubricant. Such type of bearings are also called as ***hydrodynamic lubricated bearings.***

2. ***Thin film bearings.*** The thin film bearings are those in which, although lubricant is present, the working surfaces partially contact each other atleast part of the time. Such type of bearings are also called ***boundary lubricated bearings.***

3. ***Zero film bearings.*** The zero film bearings are those which operate without any lubricant present.

4. ***Hydrostatic or externally pressurized lubricated bearings.*** The hydrostatic bearings are those which can support steady loads without any relative motion between the journal and the bearing. This is achieved by forcing externally pressurized lubricant between the members.

Atmiya University Rajkot

Hydrostatic lubrication

- It is defined as a system of lubrication in which the load supporting fluid film separating the two surfaces is created by an external source, like pump, supplying sufficient fluid under pressure.
- Since the lubricant is supplied under pressure, this type of bearing is called externally pressurized bearing.
- Principle of hydrostatic lubrication in journal bearing:-

✓ Initially the shaft rests on the bearing surface as shown in fig.(a).

✓ As the pump starts, high pressure fluid is admitted in the clearance space, forcing the surfaces of bearing and journal to separate out as shown in fig.(b).

Atmiya University Rajkot

Hydrostatic Lubrication

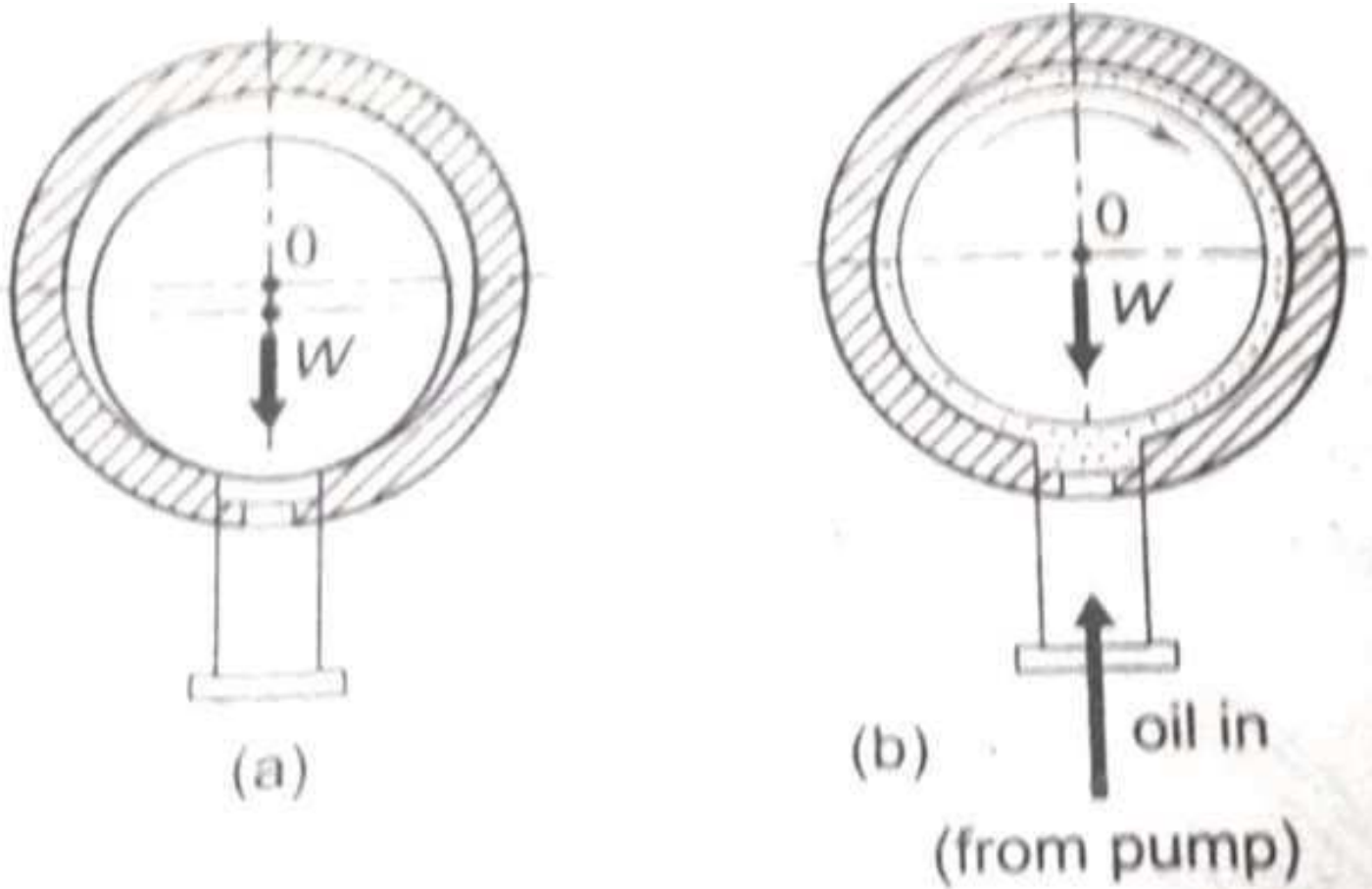

Hydrostatic Lubrication
(a) Journal at Rest
(b) Journal at Full Speed

Atmiya University
Rajkot

- ✓ Hydrostatic bearings are used on vertical turbo generators etc..
- ✓ Disadvantages:-

1) Complex construction
2) Higher initial and maintenance cost.

- ✓ Advantages:-

1) High load carrying capacity even at low speeds.
2) No starting friction
3) No rubbing action at any operating speed or load.

Atmiya University Rajkot

Thin Film Lubrication

- Also known as boundary lubrication
- It is defined as the condition of lubrication, where the lubricant film is relatively thin and there is partial metal to metal contact.
- This mode of lubrication is seen in door hinges and machine tool slides.
- The condition resulting boundary lubrication are excessive load, insufficient surface area or oil supply, low speed and misalignment.

Atmiya University Rajkot

Thick & Thin Film Lubrication

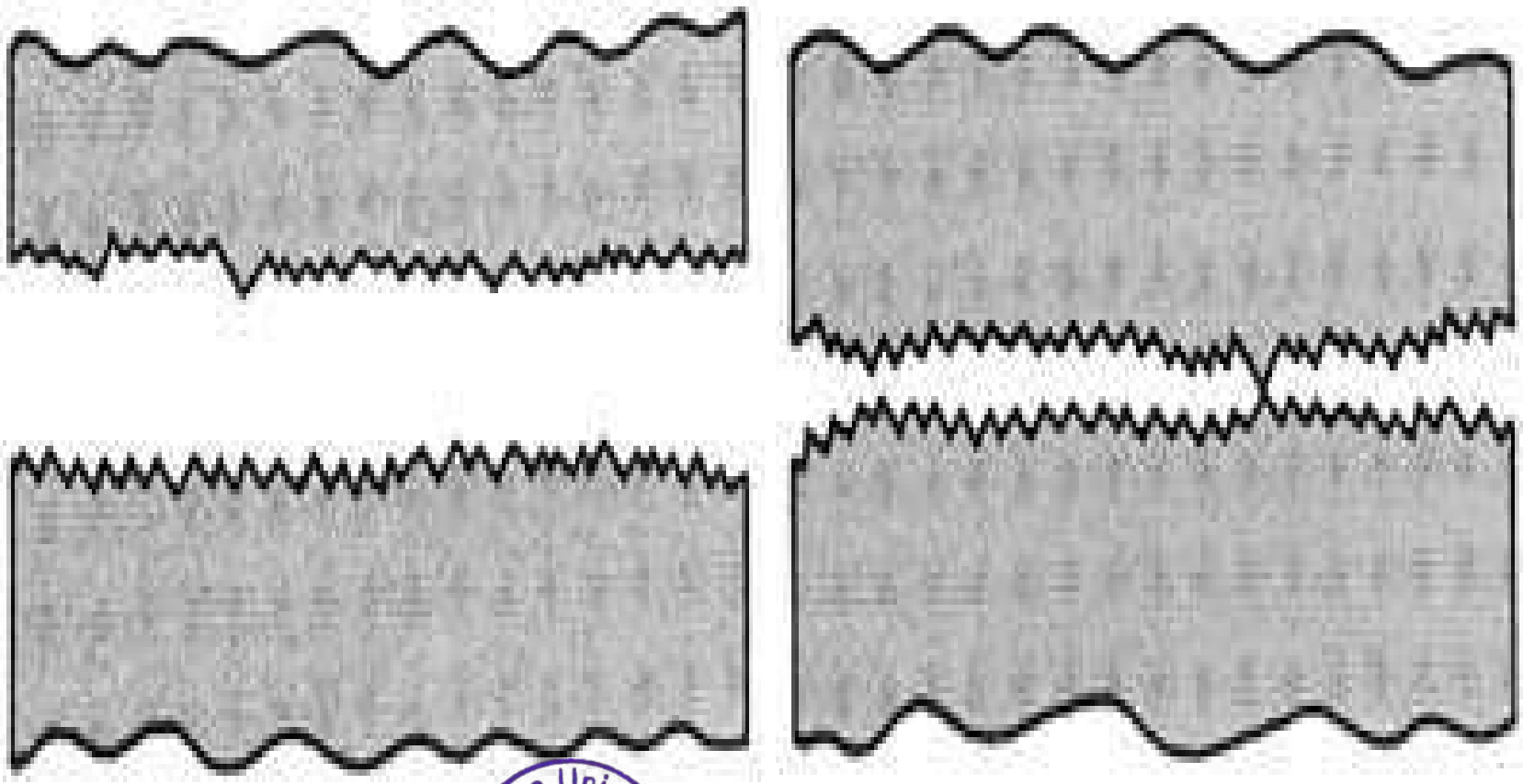

Atmiya University
Rajkot

Elastohydrodynamic Lubrication

- Rolling contact bearings come under this category. The oil film thickness is very small.
- The contact pressures are going to be very high. Hence to prevent the metal-to-metal contact, surface finishes are to be of high quality.
- Such a type of lubrication can be seen in gears, rolling contact bearings, cams etc.
- Since hydrodynamic film is developed due to elastic deflection of parts, this mode of lubrication is called elastohydrodynamic lubrication.

Atmiya University
Rajkot

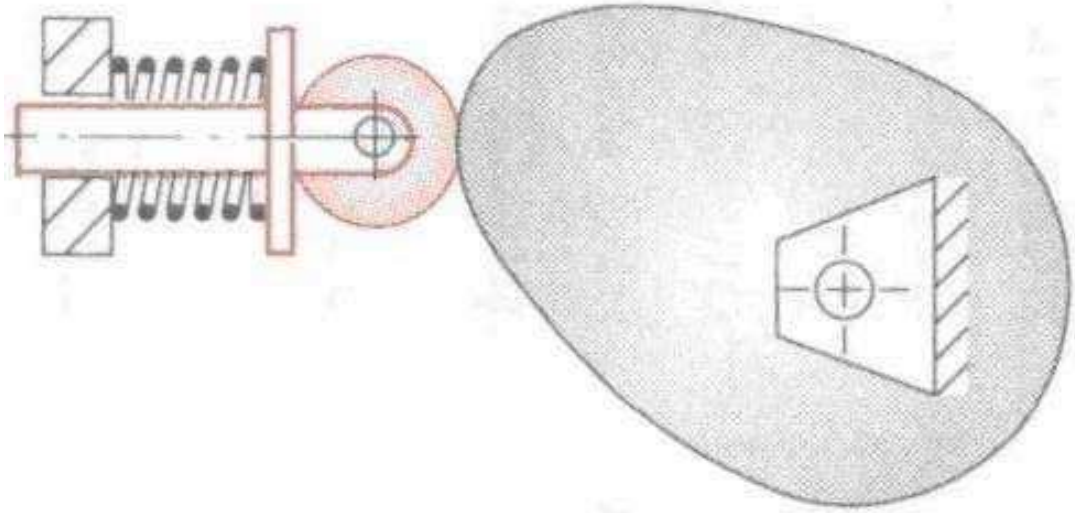

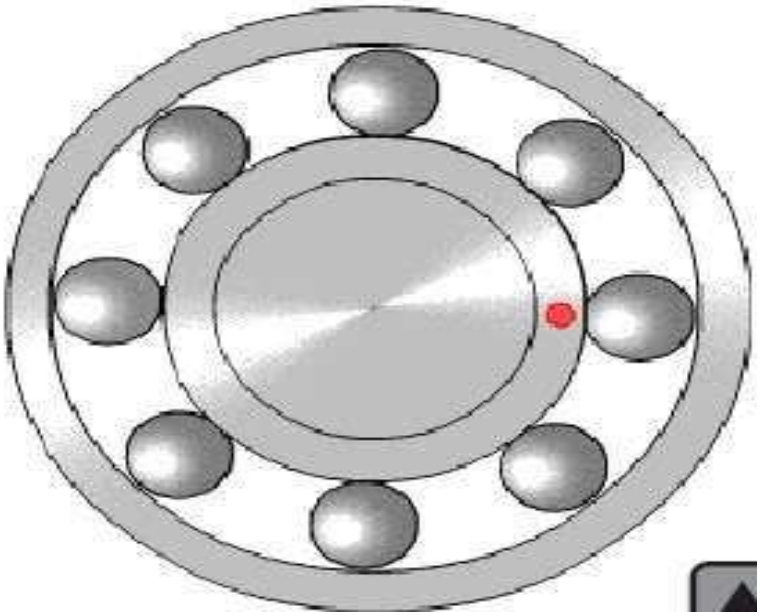

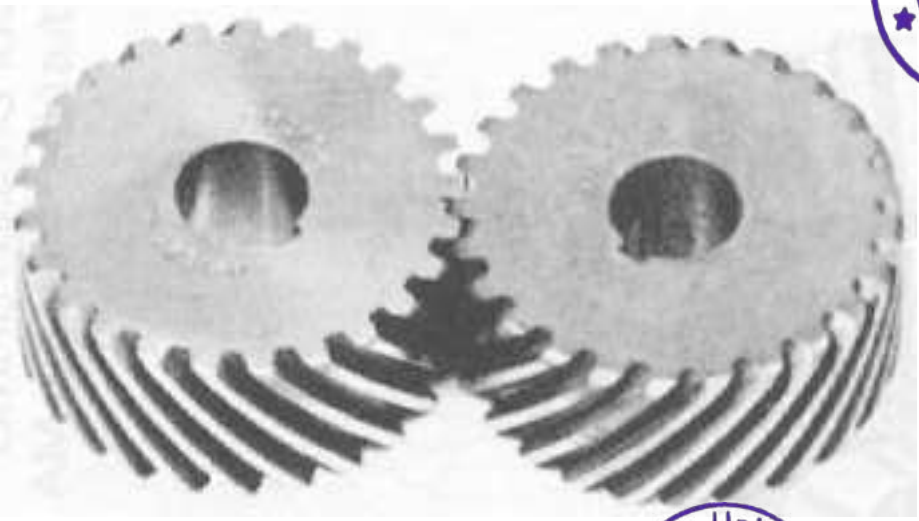

Atmiya University Rajkot

Atmiya University Rajkot

Solid film Lubrication

- For extreme temperature operations ordinary mineral oils are not satisfactory.
- Solid film lubricants such as graphite, molybdenum disulfide or their combinations which withstand high operating temperature are used.
- These types of bearings are common in furnace applications, hot drawing mills etc.

Atmiya University Rajkot

Bearing Characteristic Number

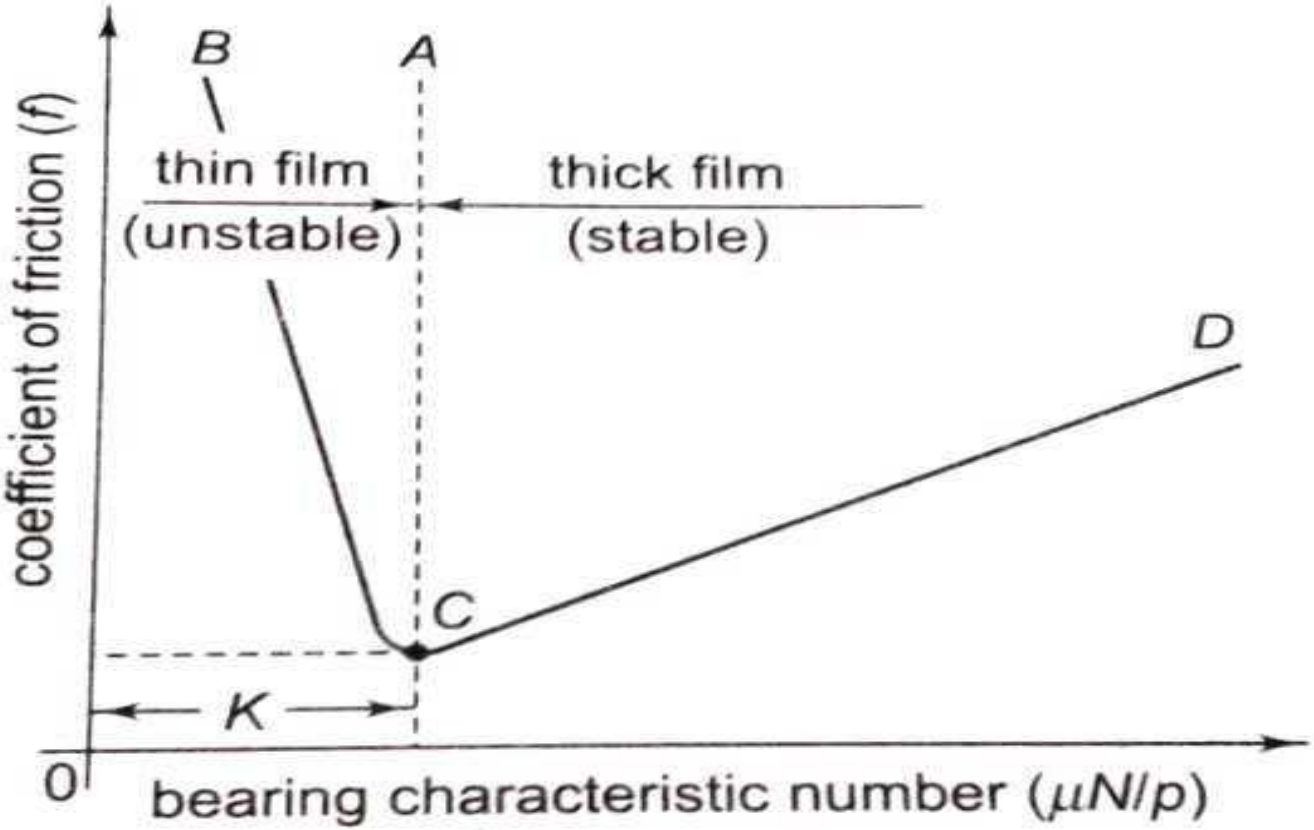

Fig. 16.11 $\mu N/p$ Curve

Atmiya University Rajkot

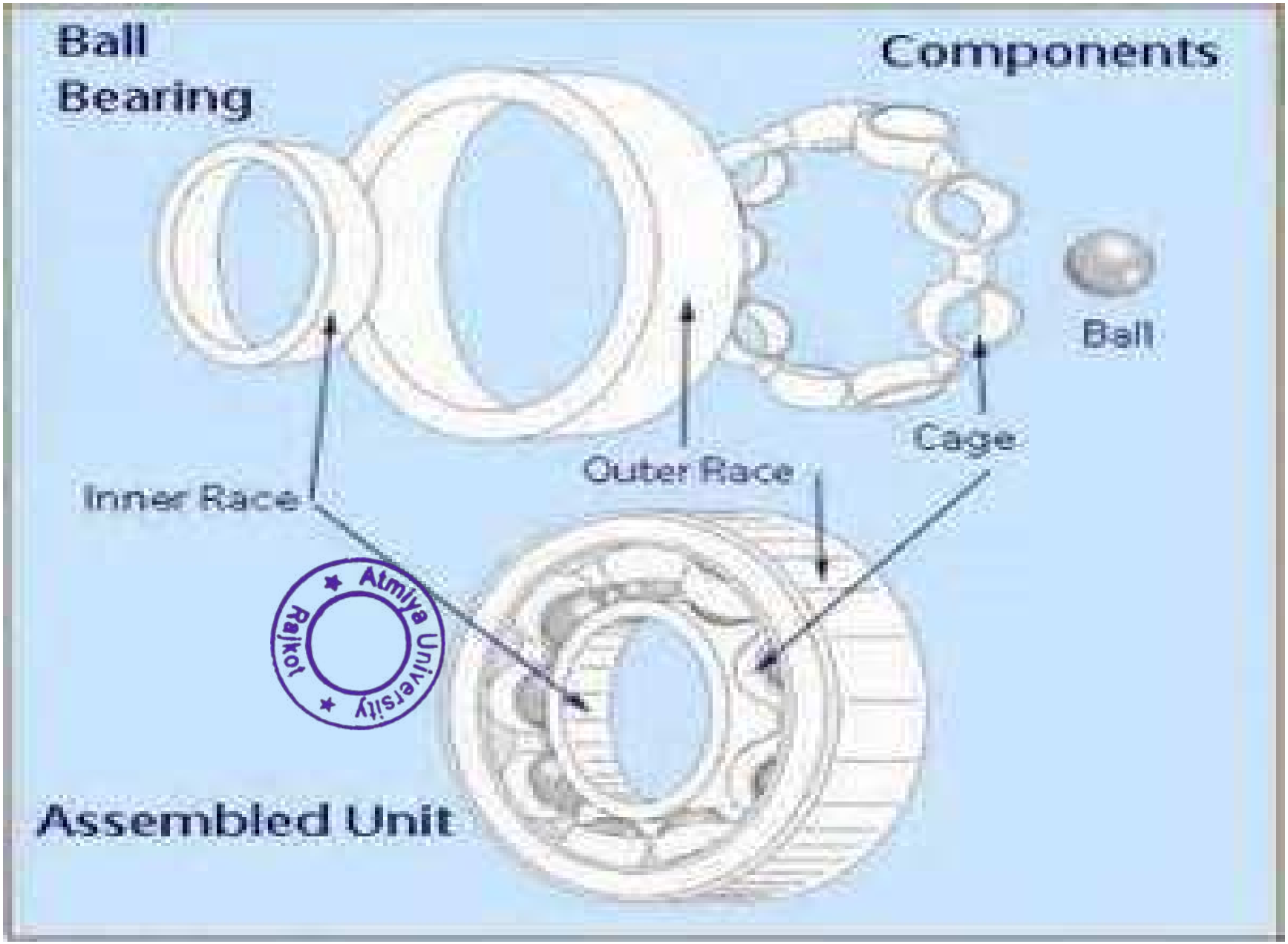

Atmiya University Rajkot

Types of rolling contact bearing

- ✓ Deep Groove Ball Bearing
- ✓ Cylindrical Roller Bearing
- ✓ Angular Contact Bearing
- ✓ Self-Aligning Bearing
- ✓ Taper Roller Bearing
- ✓ Thrust Ball Bearing
- ✓ Needle Roller Bearing
- ✓ Spherical Roller Bearing

Atmiya University Rajkot

Rolling Elements Arrangement

Types of roller bearings: (*a*) straight roller; (*b*) spherical roller, thrust; (*c*) tapered roller, thrust; (*d*) needle; (*e*) tapered roller; (*f*) steep-angle tapered roller. *(Courtesy of The Timken Company.)*

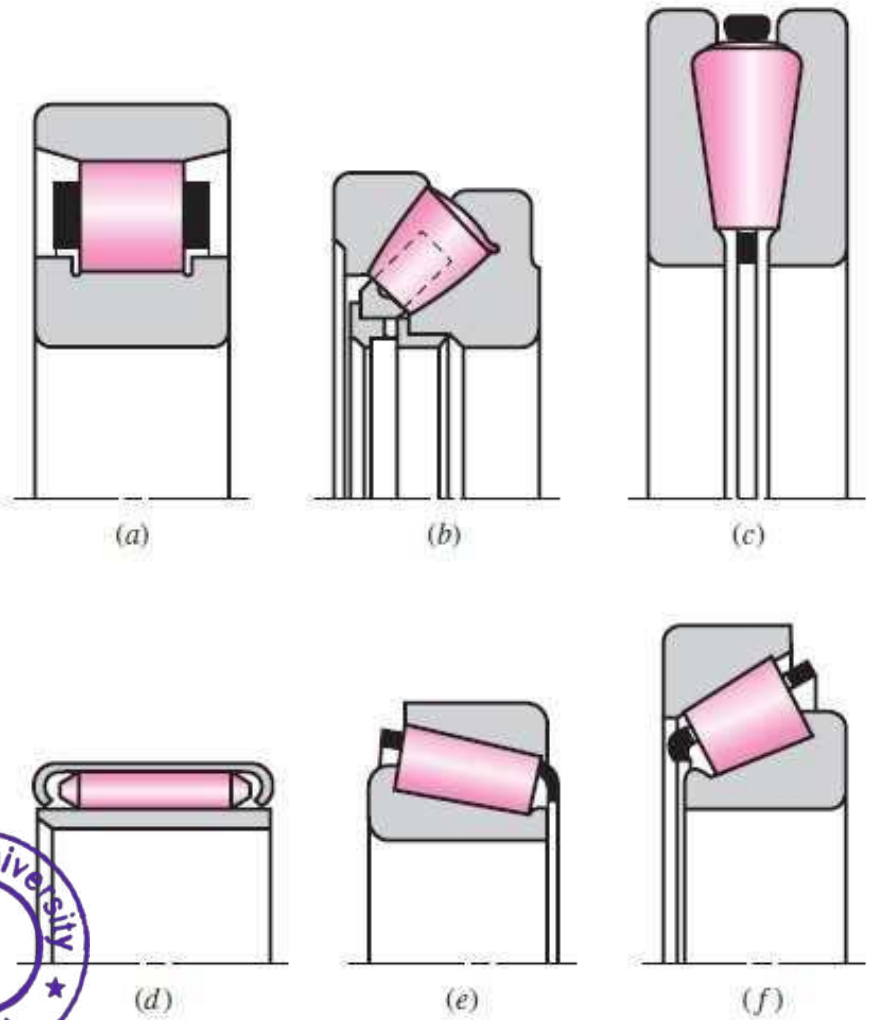

Atmiya University Rajkot

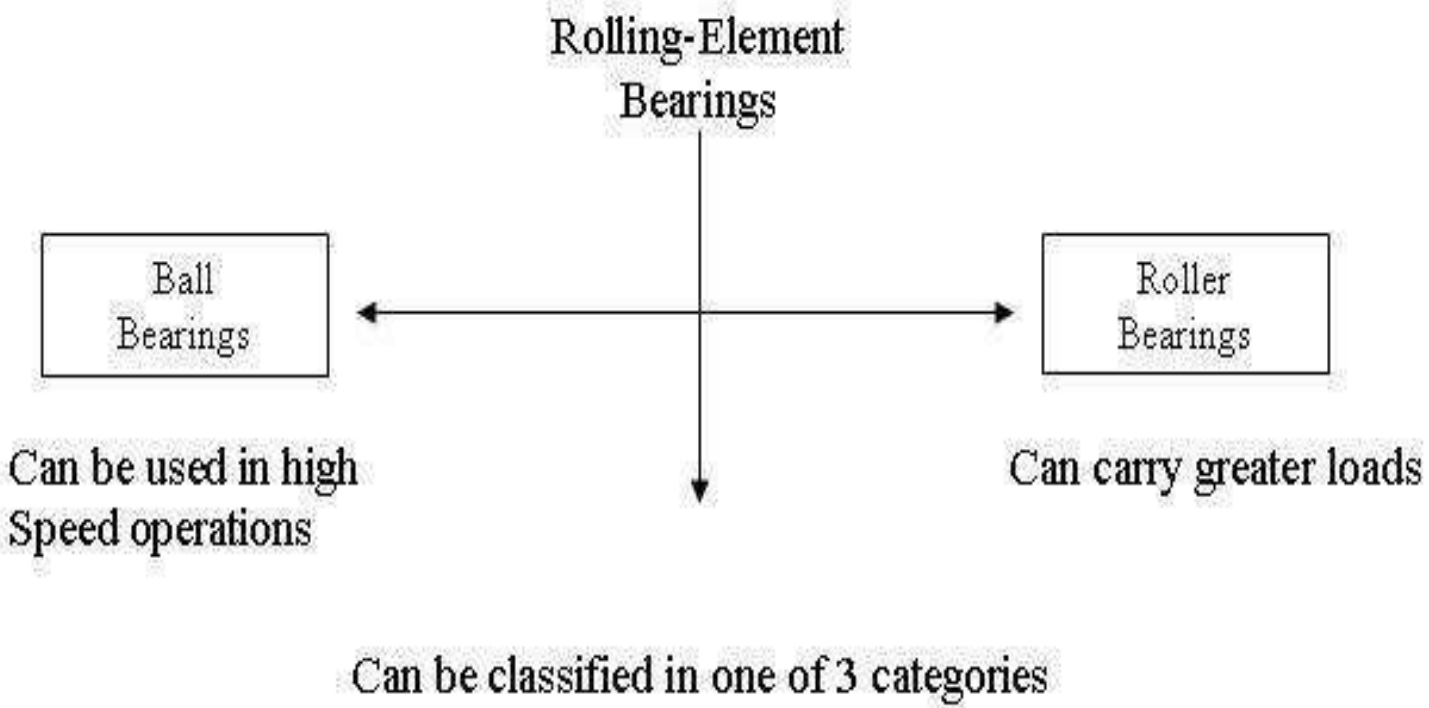

Radial (for carrying radial loads)
Thrust, or axial-contact (for carrying axial loads)
Angular-contact (for carrying combined radial and axial loads)

Atmiya University Rajkot

DEEP GROOVE BALL BAERING

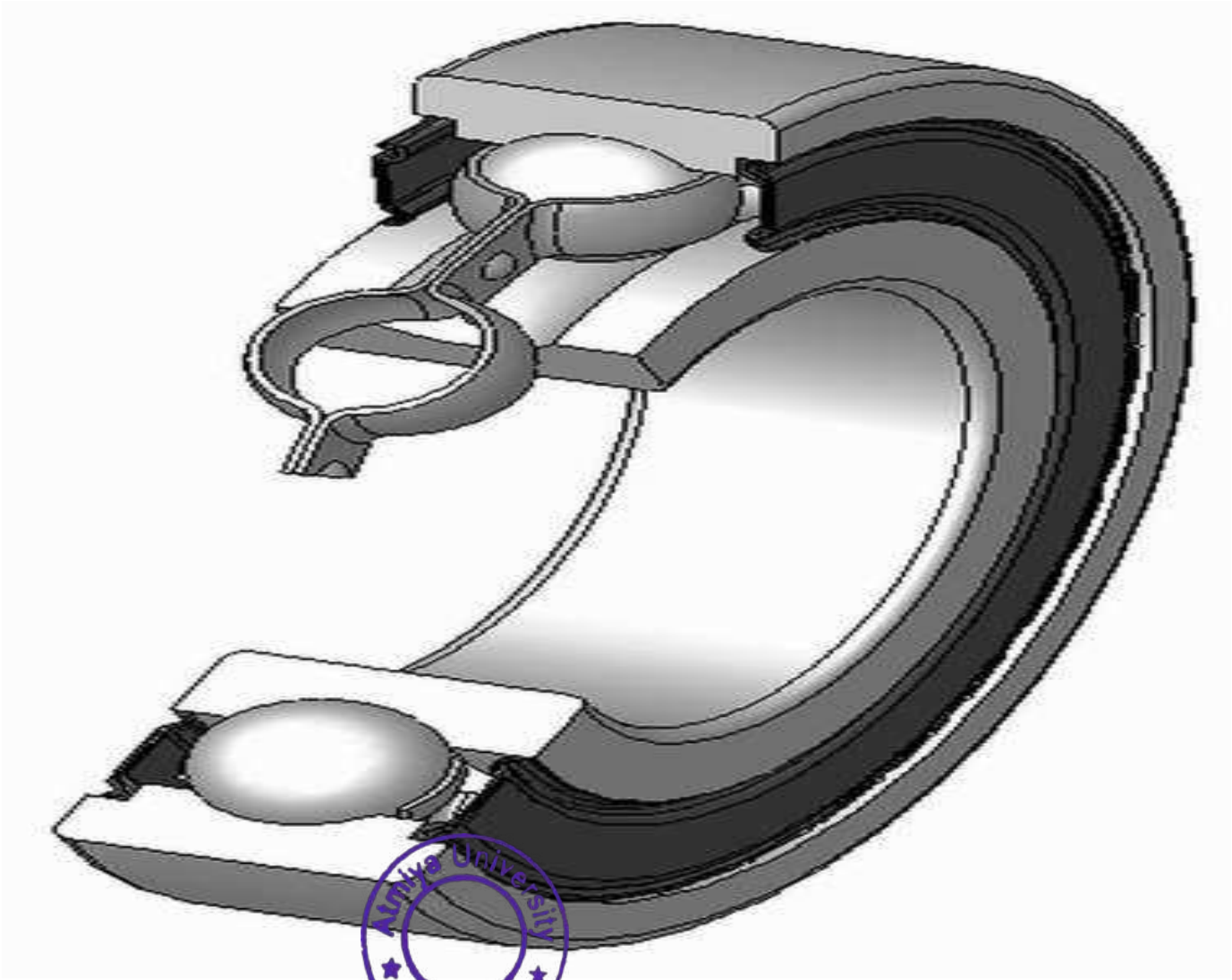

Atmiya University
Rajkot

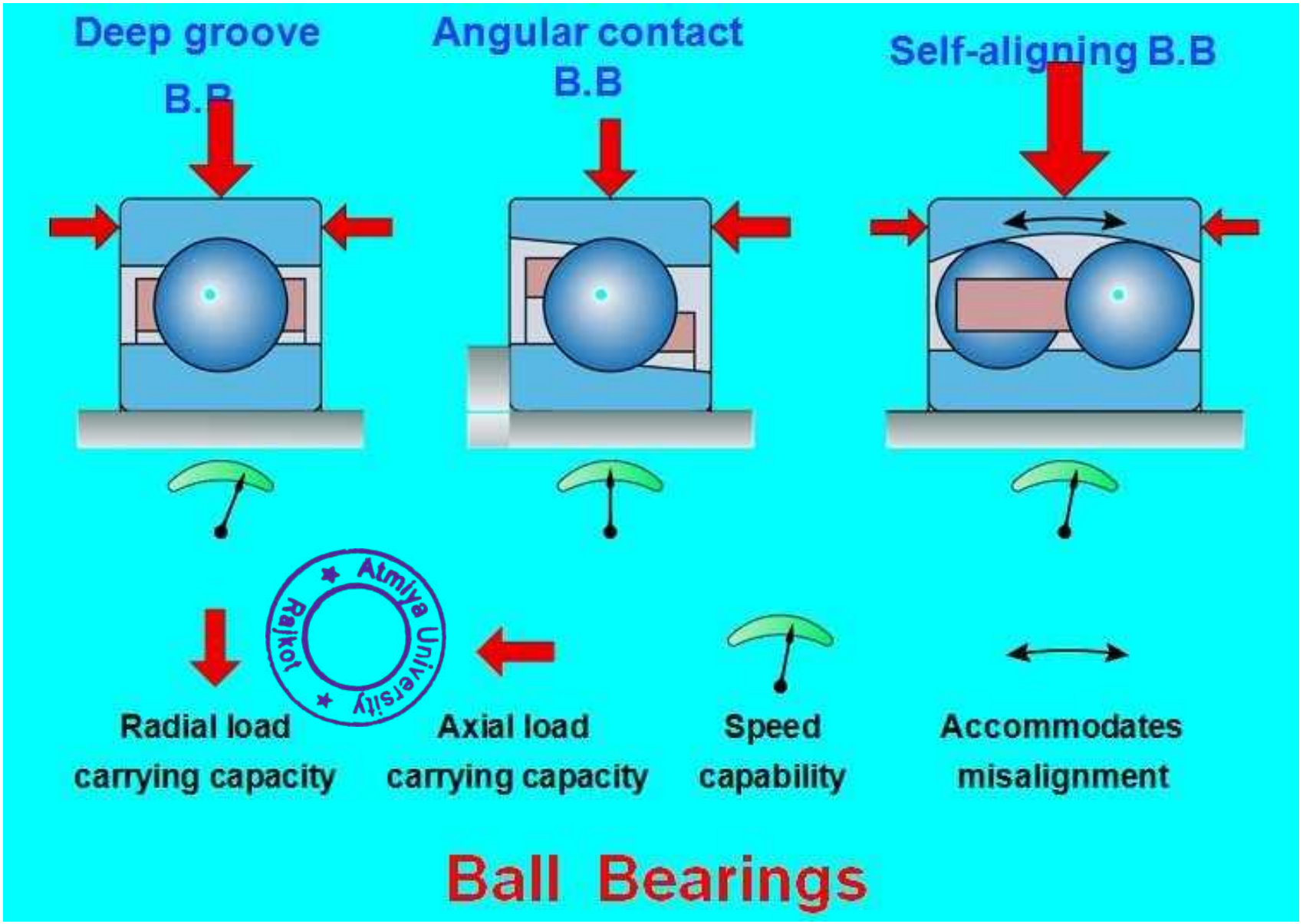

Atmiya University Rajkot

DOUBLE DEEP GROOVE BALL BEARING

Increase radial load carrying capacity

Atmiya University
Rajkot

Atmiya University
Rajkot

- Most frequently used bearing is a deep groove ball bearing.
- Found in almost all kinds of products in general mechanical engineering.
- In this type of bearing the radius of ball is slightly less than the radius of curvature of grooves in the races.
- **ADVANTAGES:-**
- Due to relatively large size of balls, deep groove ball bearing have high radial load carrying capacity and moderate thrust load carrying capacity.
- Due to point contact between the balls and races, frictional loss and the resultant temperature rise is less in this bearing.
- The maximum permissible speed of shaft depends upon the temperature rise of the bearing.
- Therefore Deep groove ball bearing gives excellent performance especially in high speed applications.
- **DISADVANTAGES:-**
- Deep groove ball bearing is not self aligning. Accurate alignment between the axes of shaft and the housing bore is required.
- Deep groove ball bearing has poor rigidity as compared to roller bearing.

Atmiya University Rajkot

Cylindrical Roller Bearing

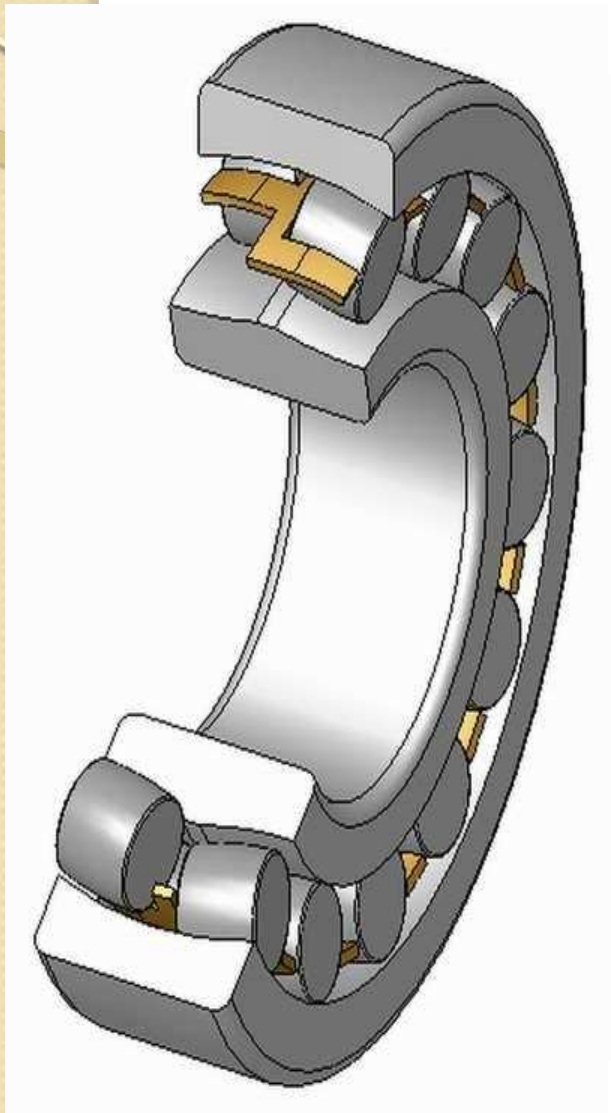

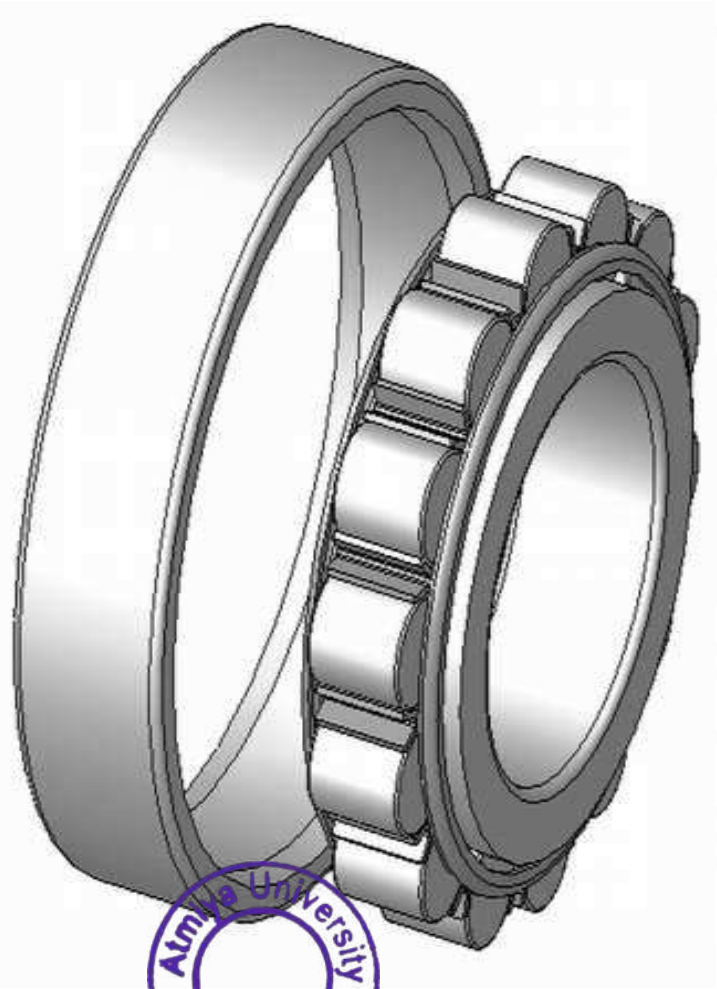

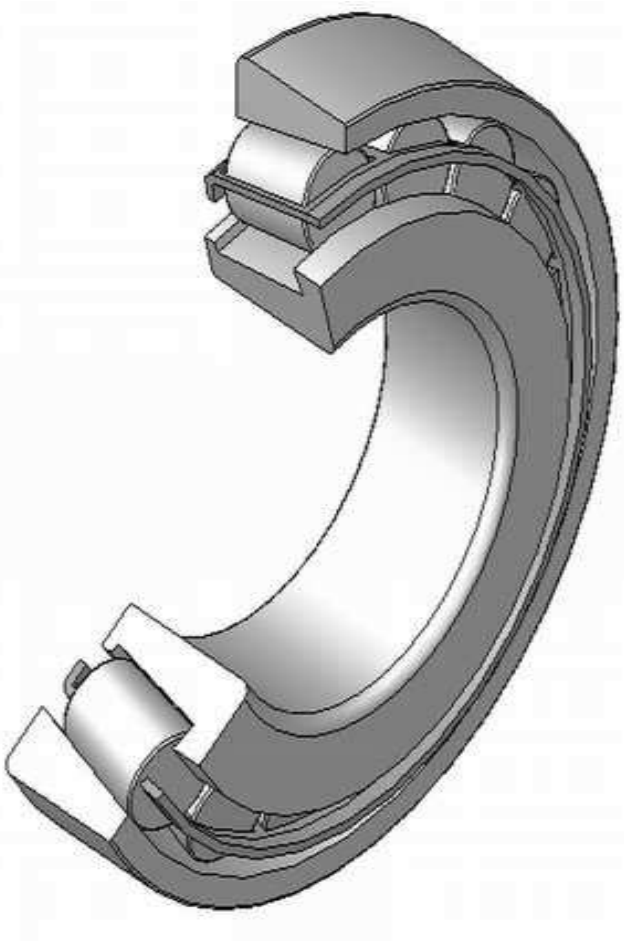

Atmiya University
Rajkot

RADIAL LOAD

Atmiya University Rajkot

Atmiya University Rajkot

Cylindrical Roller Bearing

- When max. load carrying capacity is required in a given space, the point contact in ball bearing is replaced by the line contact of roller bearing.
- Cylindrical roller bearing consist of relatively short rollers that are positioned and guided by the cage.
- **ADVANTAGES:-**
- Due to line contact between the rollers and races, the radial load carrying capacity of cylindrical bearing is very high.
- More rigid than ball bearing.
- The coefficient of friction is low and frictional loss is less in high speed applications.
- **DISADVANTAGES:-**
- It can not take thrust load.
- It is not self aligning, can not tolerate misalignment. It needs precise alignment between the axes of shaft and the bore of the housing.
- It generate more noise.

Atmiya University Rajkot

Angular Contact Bearing

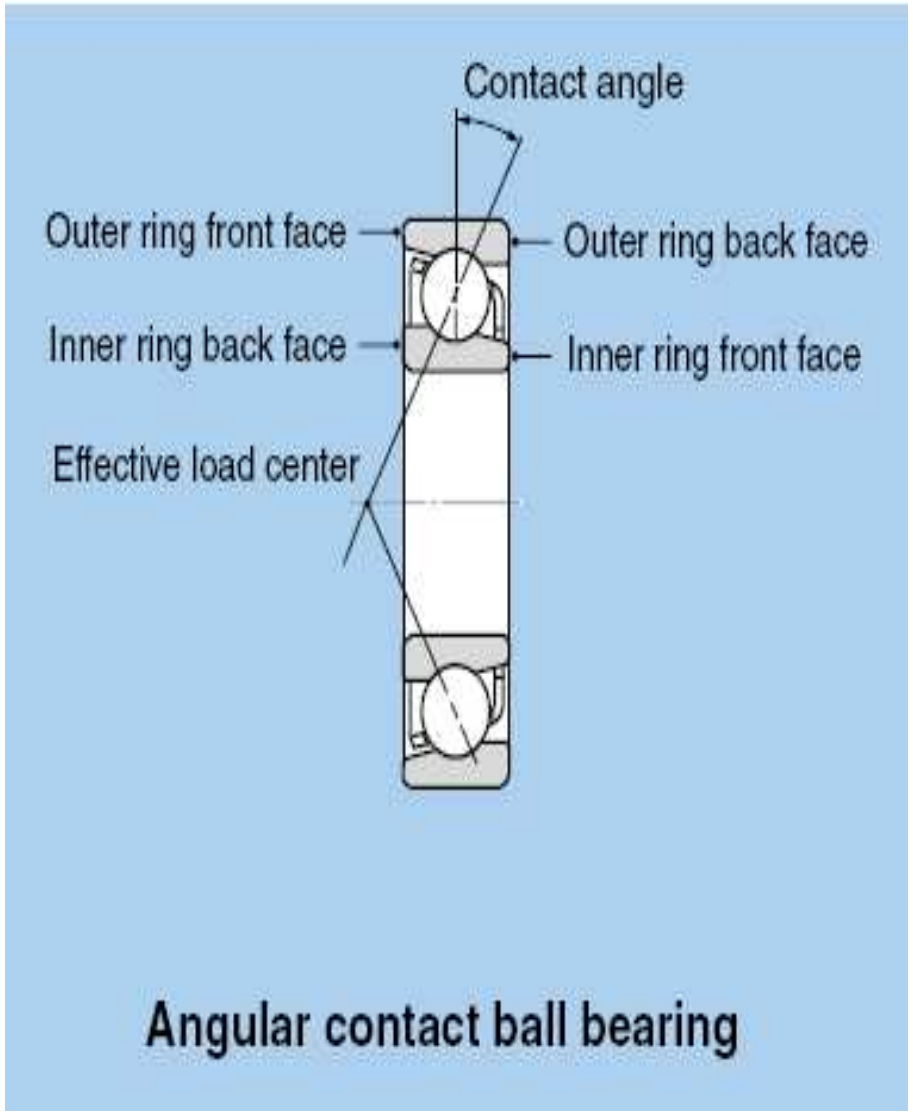

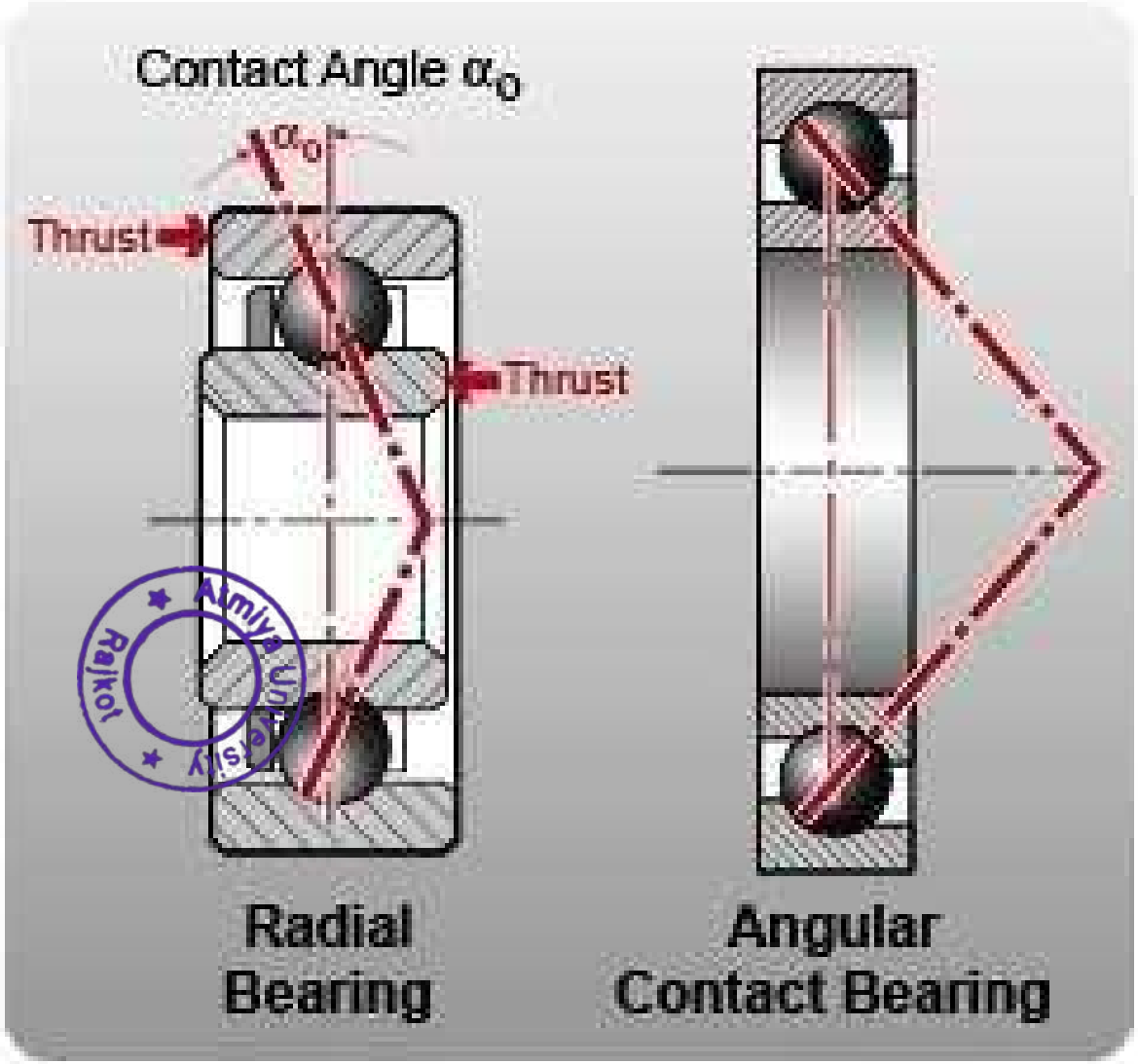

Atmiya University Rajkot

- In angular contact bearing, the grooves in inner and outer races are so shaped that line of reaction at the contact between balls and races makes an angle with the axis of the bearing.
- This reaction has two components – radial and axial.
- Angular contact bearing can take radial and thrust loads.
- Angular contact bearing are often used in pairs, either side by side or at the opposite ends of the shaft, in order to take the thrust load in both directions.
- **ADVANTAGES:-**
- It can take both radial and thrust loads.
- In angular contact bearing one side of the groove in the outer race is cut away to permit the insertion of more no. of balls than that of deep groove ball bearing. This permits the bearing to carry large axial and radial loads. Therefore the load carrying capacity is more than that of deep groove ball bearing.
- **DISADVANTAGES:-**
- Two bearings are required to take the thrust load in either direction.
- Angular contact bearing requires initial pre-load.

Ashiya University Rajkot

Self-Aligning Bearing

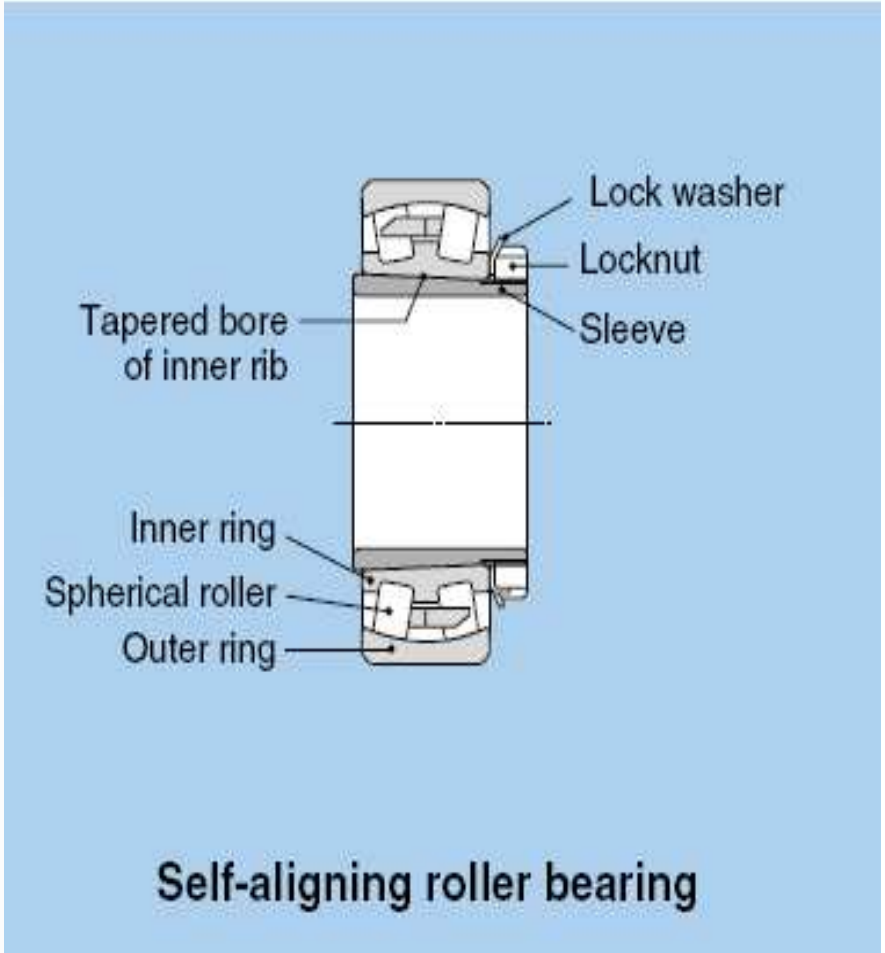

Atmiya University
Rajkot

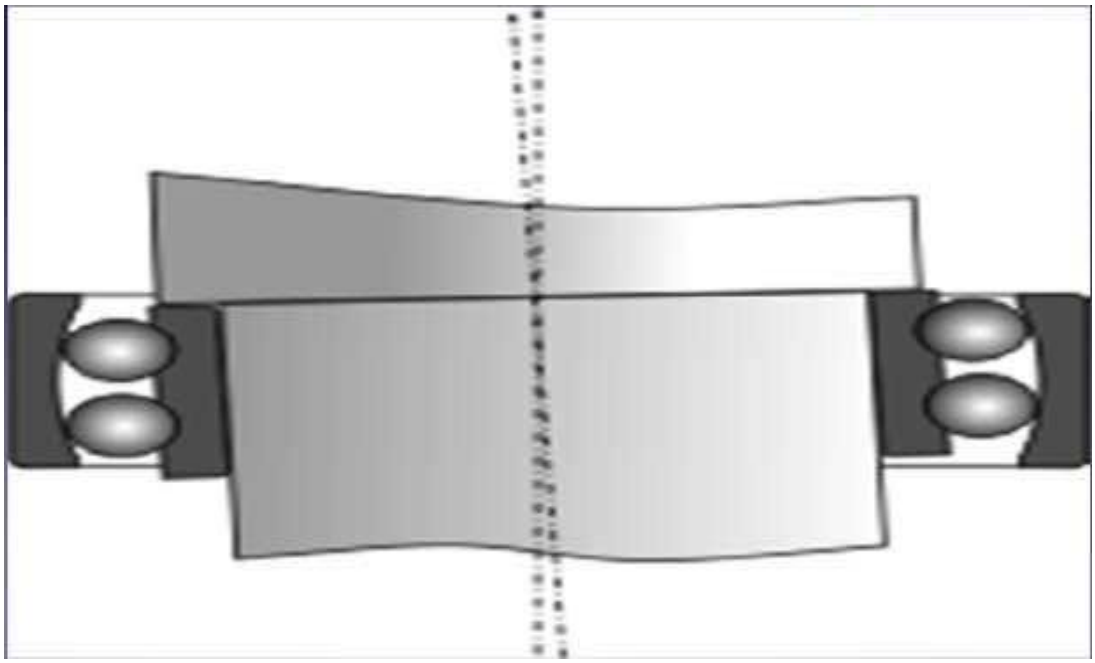

Atmiya University
Rajkot

Atmiya University
Rajkot

- Self Aligning ball bearing consist of two rows of balls, that roll on a common spherical surface in the outer race.
- In self aligning ball bearing the assembly of shaft, inner race and the balls with cage can freely roll adjust itself to the angular misalignment of the shaft.
- Takes radial and moderate axial loads.
- The spherical surface(i.e Self-Aligning ball bearing) allows for MINOR angular misalignment (1.5° to 3°) in the shaft arising from errors in shaft mounting, deflection of the shaft or frame / housing distortion.
- Prevents the bearing from exerting even small bending influence on the shaft.
- Used where bending or accurate mounting is not possible.
- Very low friction.
- Mainly find application in agricultural machinery, railway axle-boxes.

Atmiya University Rajkot

Taper Roller Bearing

Taper Roller Bearing

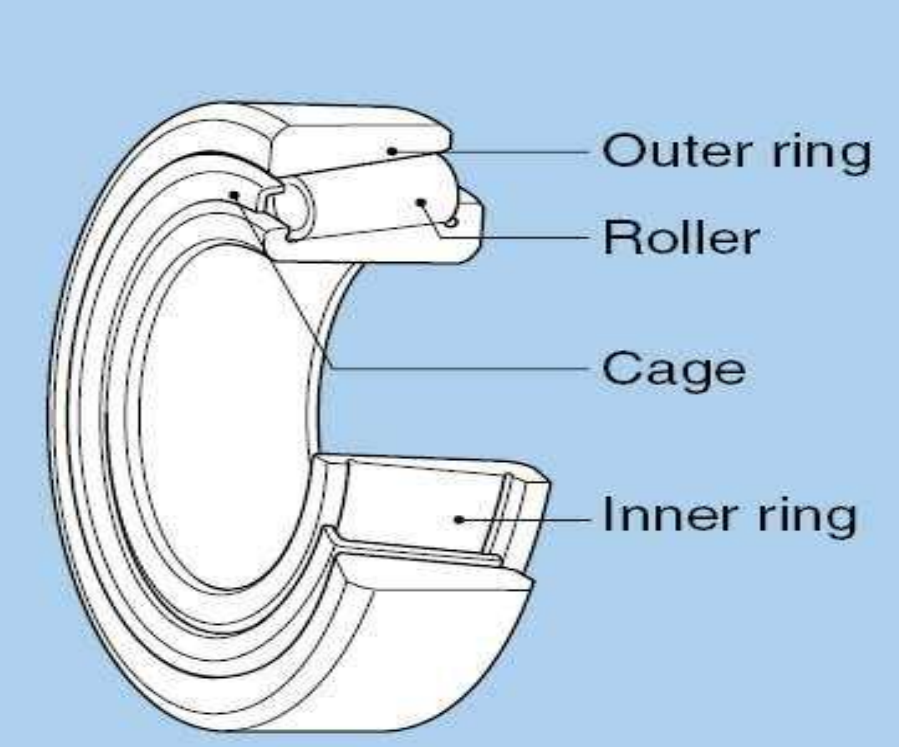

Tapered roller bearing

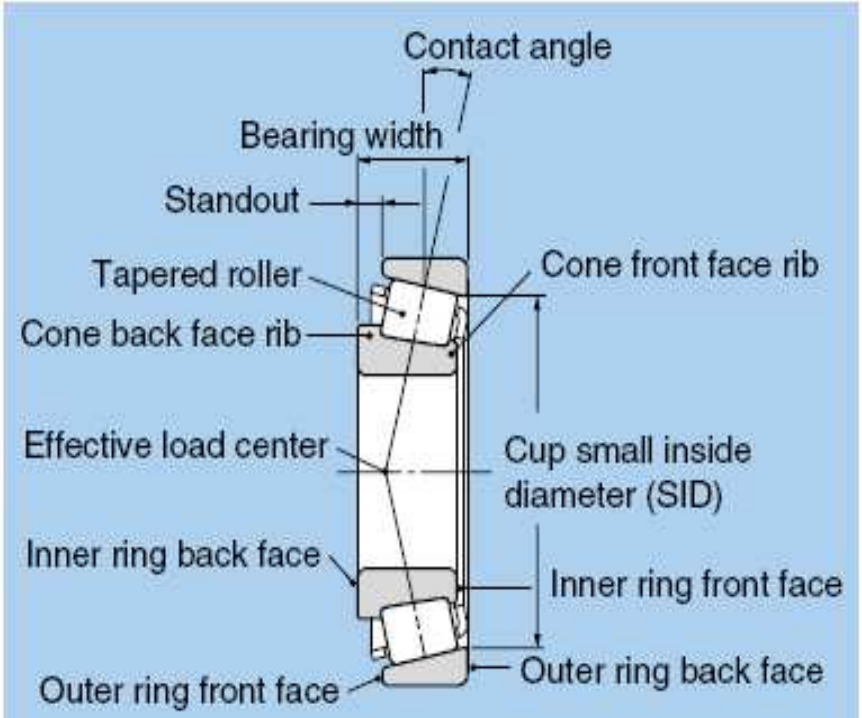

Tapered roller bearing

Atmiya University Rajkot

- Taper roller bearing consist of rolling elements in form of frustum of cone.
- They are arranged in such a way that the axes of individual rolling elements intersect in a common apex point on the axis of bearing.
- Taper roller bearing has separable construction.
- The outer ring is called **cup** and the inner ring is called **cone**.
- **ADVANTAGES:-**
- Taper roller bearing can carry both heavy radial and axial loads.
- Taper roller bearing has more rigidity.
- Taper roller bearing can be easily assembled and disassembled due to separable parts.
- **DISADVANTAGES:-**
- It is necessary to use two taper roller bearing on the shaft to balance the axial force.
- Taper roller bearing can not tolerate the misalignment between the axes of shaft and the housing bore.
- Taper roller bearing are costly.
- Taper roller bearing are used for cars and trucks, propeller shafts and differentials, rail road car axles, large size bearing in rolling mills.
- TRB can take both radial and axial loads and used for gear boxes for heavy trucks, bevel-gear transmission, lathe spindles, etc.

Atmiya University Rajkot

Thrust Ball Bearing

Atmiya University
Rajkot

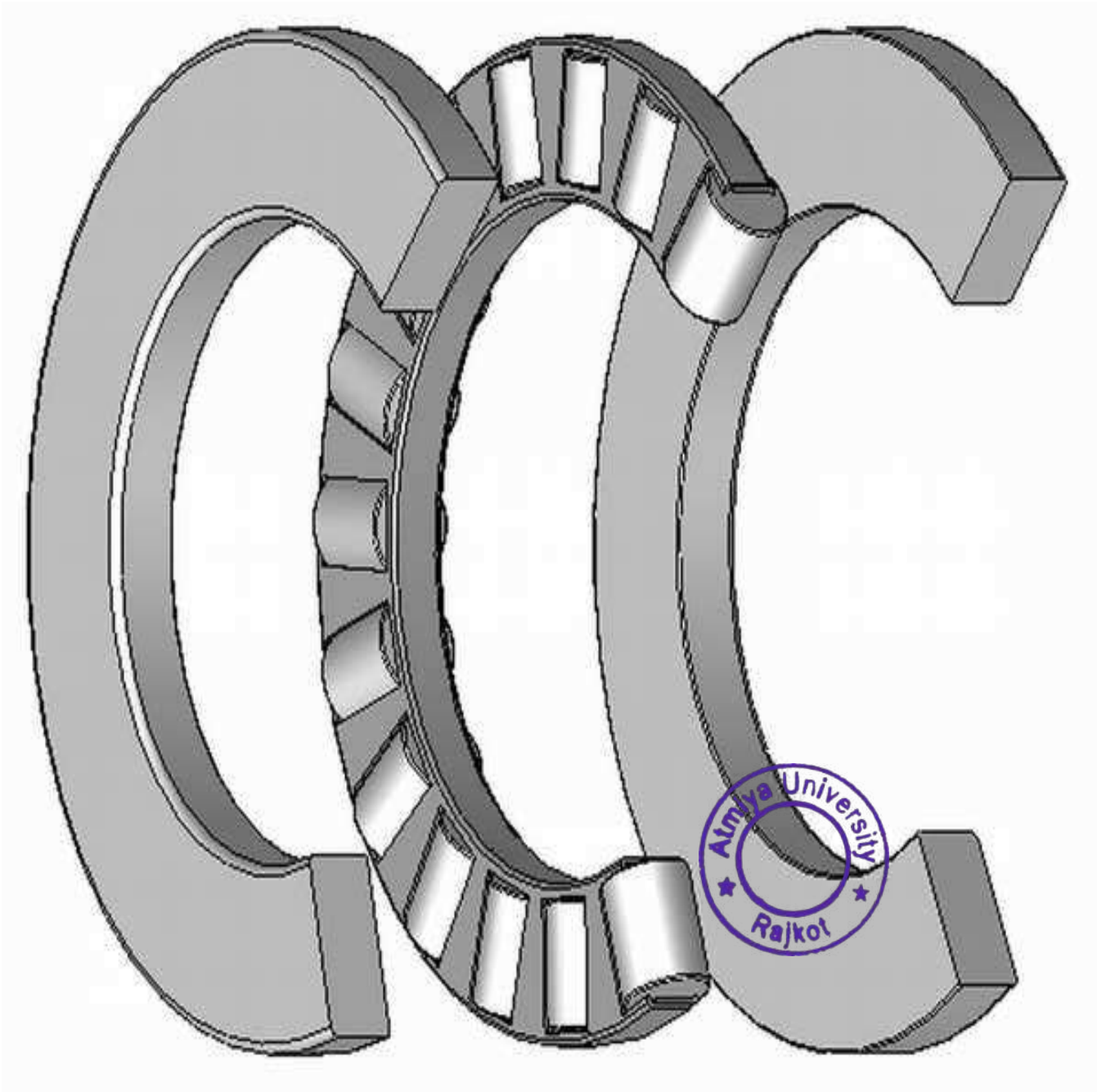

Atmiya University
Rajkot

Atmiya University
Rajkot

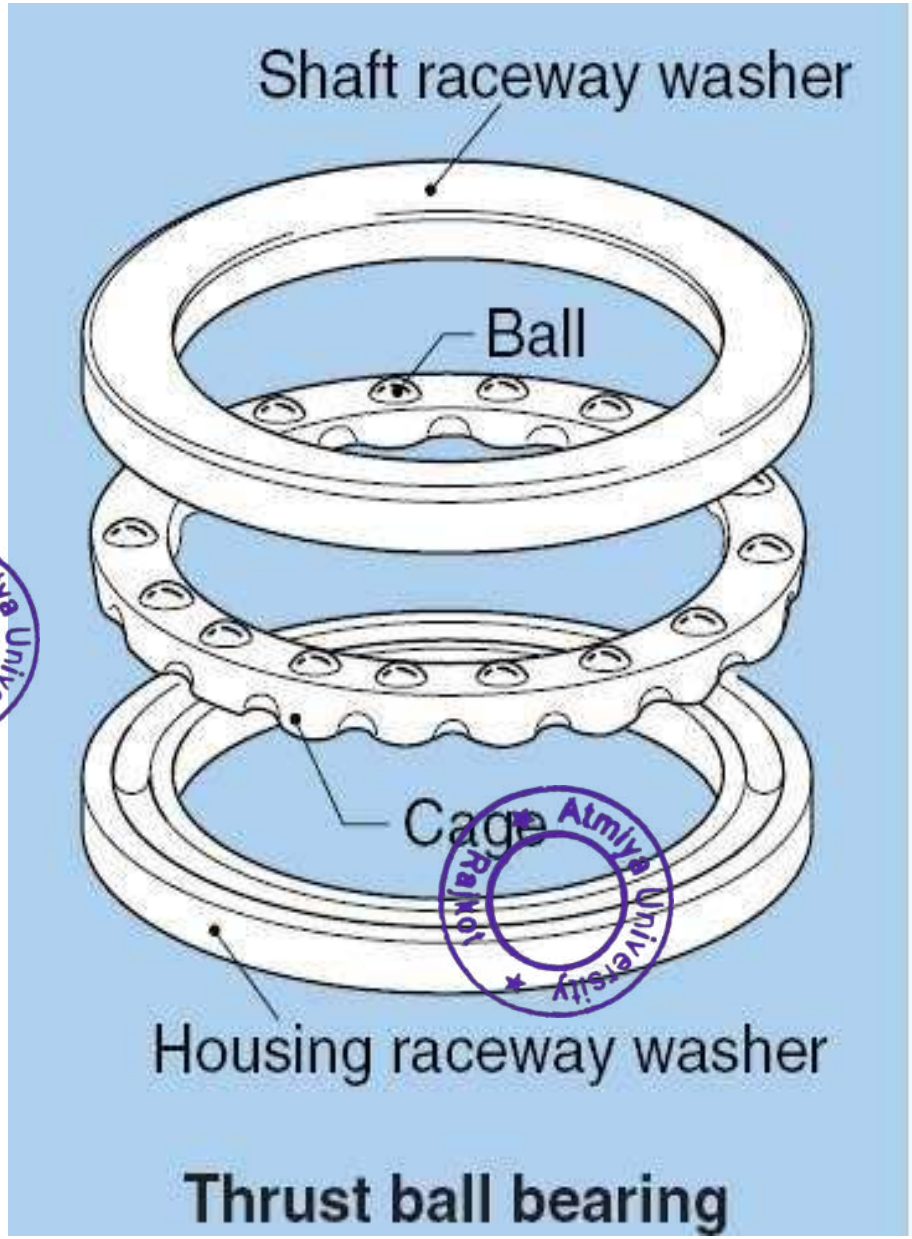

Thrust ball bearing

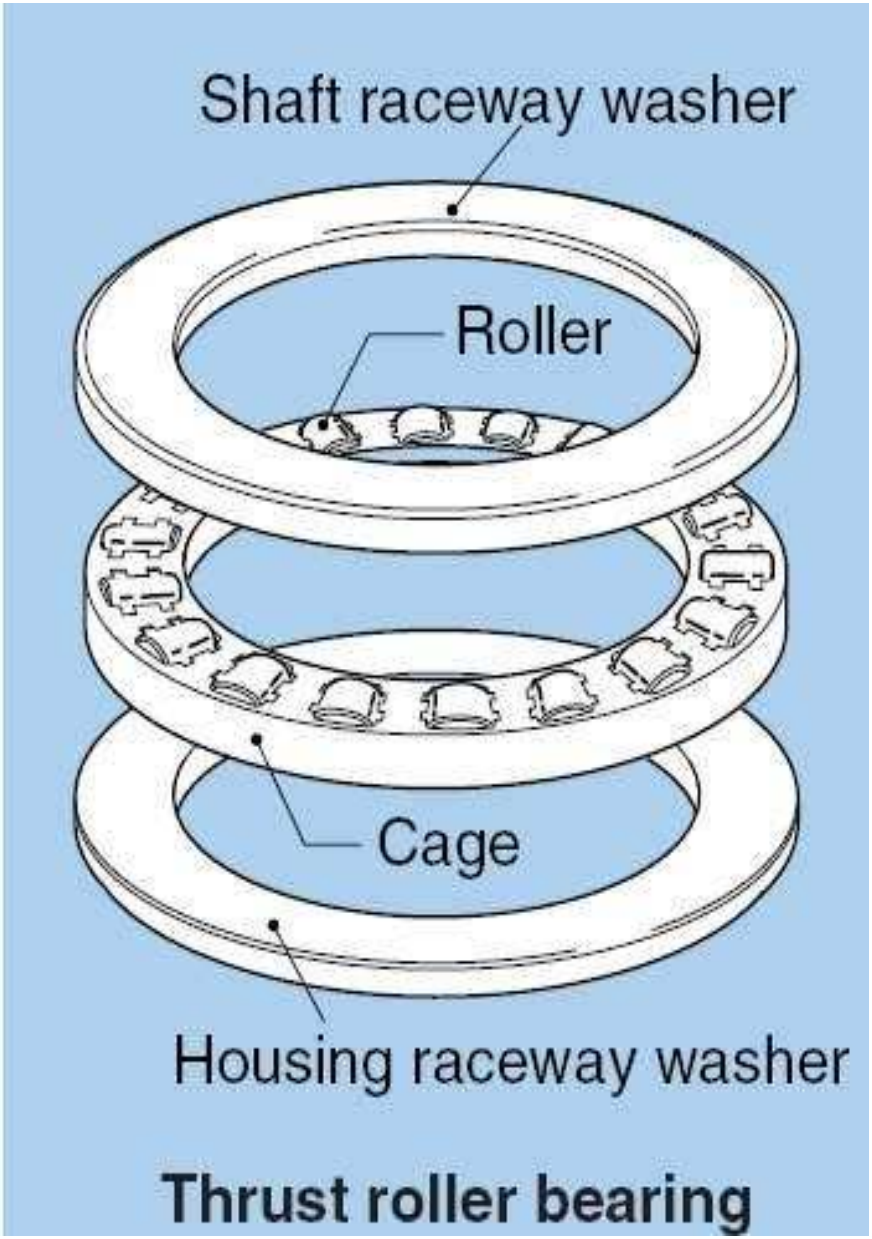

Thrust roller bearing

Atmiya University Rajkot

- Thrust ball bearing consist of a row of balls running between two rings – the shaft ring and the housing ring.
- Thrust ball bearing can take thrust load in only one direction and cannot take any radial load.
- The use of large no. of balls increases thrust load carrying capacity in smaller space. This is the **major advantage** of thrust bearing.
- **DISADVANTAGES:-**
- It cannot take any radial load.
- It is not self-aligning and cannot tolerate misalignment.
- Performance is satisfactory at low and medium speeds.
- At high speeds such bearings give poor service because the balls are subjected to centrifugal forces.
- It does not operate well on horizontal shafts as they do on vertical shafts.
- Thrust ball bearing are used where heavy thrust loads are to be carried.
- **Application:-** Worm gearboxes, crane hooks.

Atmiya University Rajkot

Needle Roller Bearing

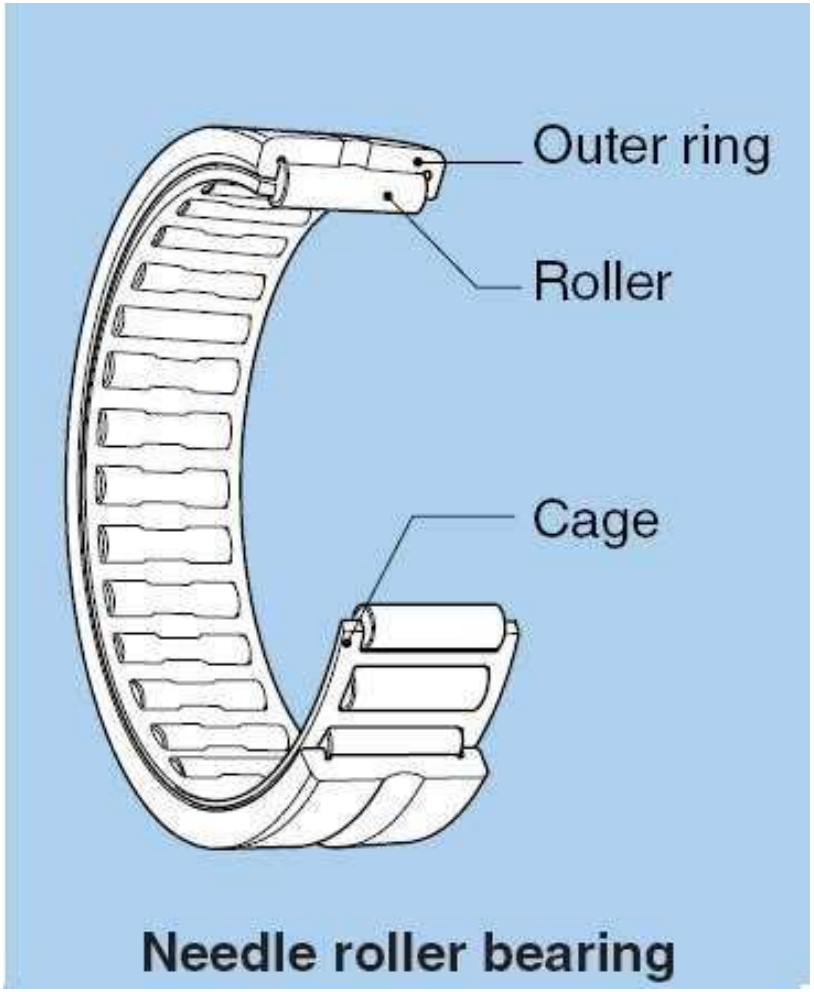

Atmiya University
Rajkot

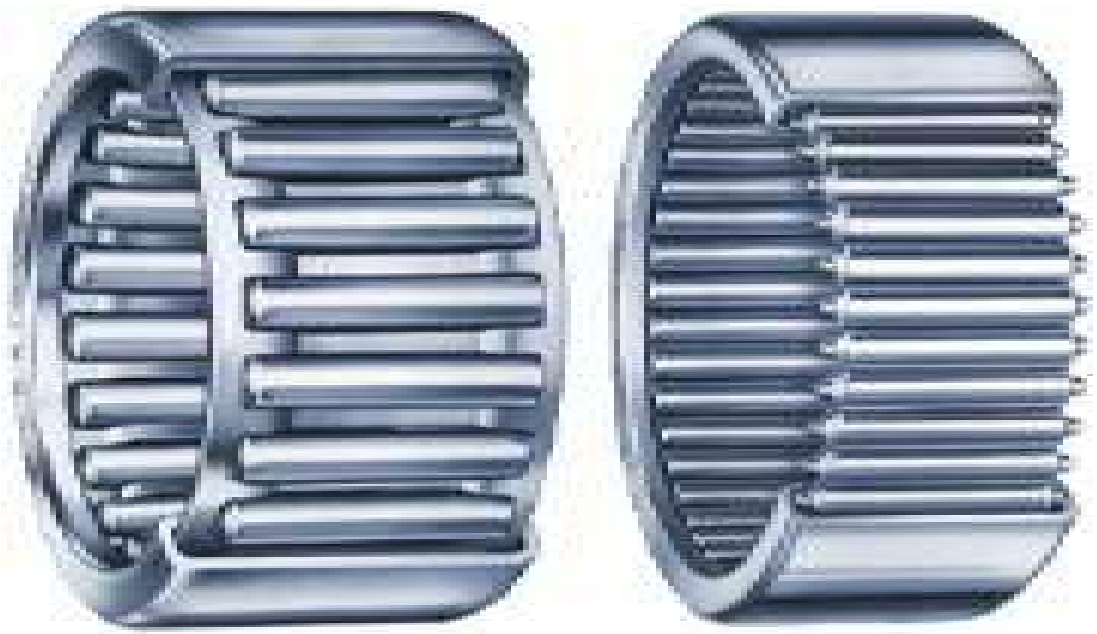

- These are bearings with very small diameter.
- They have no inner race.
- The needles roll on the shaft itself.
- The shaft must have sufficient hardness and surface finish for this purpose.
- This type of bearing is used when the smallest possible diameter is required.
- They have the advantage of light weight and occupy small space.
- They are used in aircraft industry, live tail stock centers, bench-drill spindles, etc.

Atmiya University Rajkot

Spherical Roller Bearing

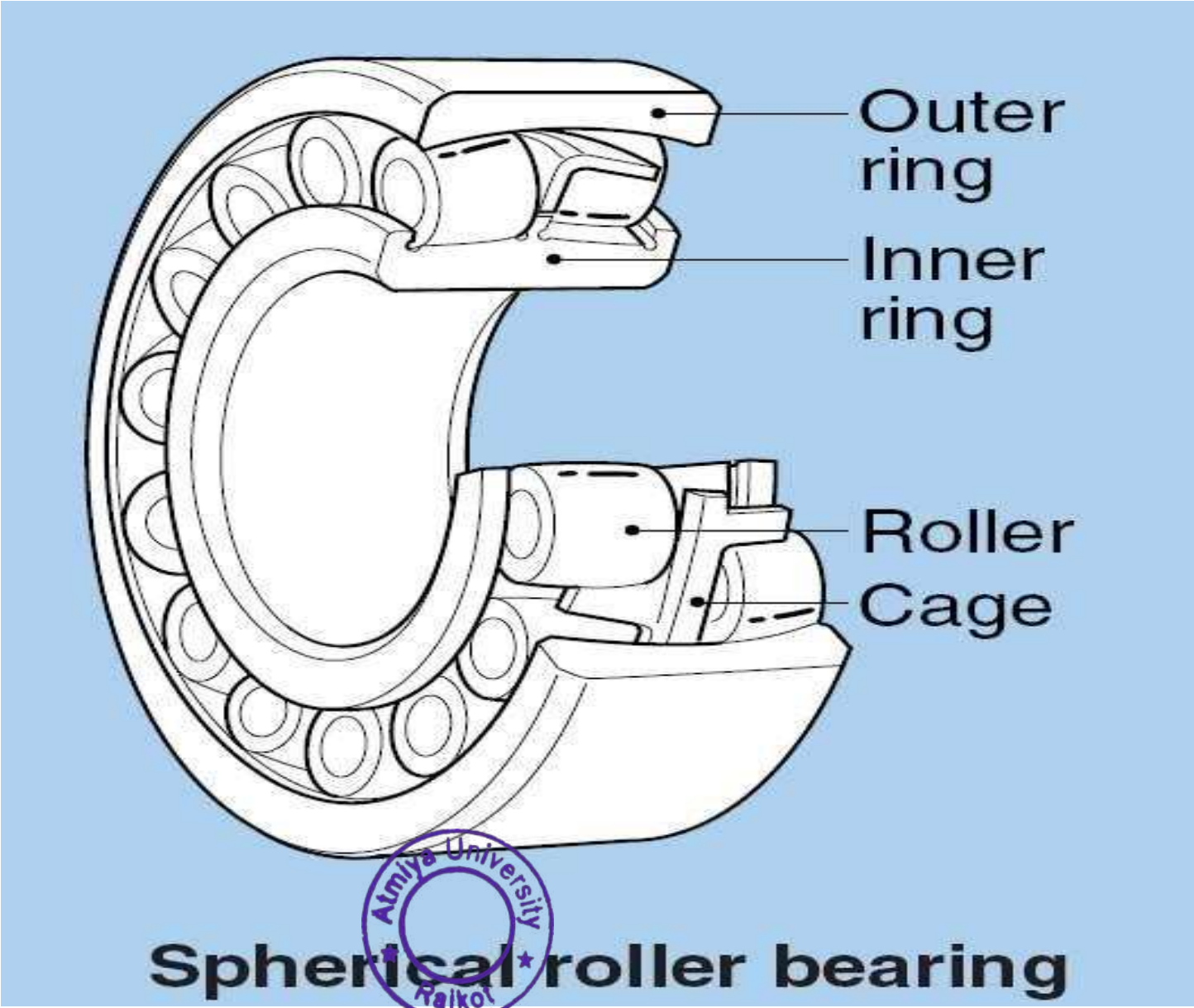

Atmiya University Rajkot

Atmiya University
Rajkot

Atmiya University
Rajkot

- Has two rows of spherical rollers which roll on the common sphered or spherical surface raceway in the outer ring.
- The spherical surface allows for MINOR angular misalignment (1° to 2.5°) in the shaft arising from errors in shaft mounting, deflection of the shaft or frame / housing distortion.
- Prevents the bearing from exerting even small bending influence on the shaft.
- Compare with self-aligning ball bearing it takes very high radial and axial loads.
- Used where bending or accurate mounting is not possible.
- The bearing is capable of supporting heavy loads, and is therefore often used in industrial machinery.

Atmiya University Rajkot

Types & Performance of Rolling Contact Bearings

Bearings types / Characteristics	Deep groove ball bearings	Angular contact ball bearings	Cylindrical roller bearings	Needle roller bearings	Tapered roller bearings	Self-aligning roller bearings	Thrust ball bearings
Load carrying capacity (Radial load / Axial load)			❸				
High speed rotation ❶	☆☆☆☆	☆☆☆☆	☆☆☆☆	☆☆☆	☆☆☆	☆☆	☆
Low noise/vibration ❶	☆☆☆☆	☆☆☆	☆	☆			☆
Low friction torque ❶	☆☆☆☆	☆☆☆	☆				
High rigidity ❶			☆☆	☆☆	☆☆	☆☆☆	
Allowable misalignment for inner/outer rings ❶	☆					☆☆☆	★
Non-separable or separable ❷			○	○	○		○

❶ ☆The number of stars indicates the degree to which that bearing type displays that particular characteristic.
★Not applicable to that bearing type.
❷ ○Indicates both inner ring and outer ring are detachable.
❸ Some cylindrical roller bearings with rib can bear an axial load.

Atmiya University Rajkot

Selection of Bearing-type

- The selection of the type of bearing in a particular application depends upon the requirement of the application and the characteristics of different types of bearings.
- The guidelines for selecting a proper type of bearing are as follows:

(i) For low and medium radial loads, ball bearings are used, whereas for heavy loads and large shaft diameters, roller bearings are selected.

(ii) Self-aligning ball bearings and spherical roller bearings are used in applications where a misalignment between the axes of the shaft and housing is likely to exist.

(iii) Thrust ball bearings are used for medium thrust loads whereas for heavy thrust loads, cylindrical roller thrust bearings are recommended. Double acting thrust bearings can carry the thrust load in either direction.

(iv) Deep groove ball bearings, angular contact bearings and spherical roller bearings are suitable in applications where the load acting on the bearing consists of two components— radial and thrust.

Aligarh Muslim University Rajkot

v) The maximum permissible speed of the shaft depends upon the temperature rise in the bearing. For high speed applications, deep groove ball bearings, angular contact bearings and cylindrical roller bearings are recommended.

(vi) Rigidity controls the selection of bearings in certain applications like machine tool spindles. Double row cylindrical roller bearings or taper roller bearings are used under these conditions. The line of contact in these bearings, as compared with the point of contact in ball bearings, improves the rigidity of the system.

(vii) Noise becomes the criterion of selection in applications like household appliances. For such applications, deep groove ball bearings are recommended.

Atmiya University
Rajkot

Static Load Carrying Capacity

- Static load is defined as the load acting on the bearing when the shaft is stationary.
- It produces permanent deformation in balls and races, which increases with increasing load.
- The permissible static load, therefore, depends upon the permissible magnitude of permanent deformation.
- It has been found that a total permanent deformation of 0.0001 of the ball or roller diameter occurring at the most heavily stressed ball and race contact, can be tolerated in practice, without any disturbance like noise or vibrations.
- The static load carrying capacity of a bearing is defined as the static load which corresponds to a total permanent deformation of balls and races, at the most heavily stressed point of contact, equal to 0.0001 of the ball diameter.

Atmiya University Rajkot

Stribeck's Equation

- Stribeck's equation gives the static load capacity of bearing.
- It is based on the following assumptions:

(i) The races are rigid and retain their circular shape.

(ii) The balls are equally spaced.

(iii) The balls in the upper half do not support any load.

- Figure shows the forces acting on the inner race through the rolling elements, which support the static load C_0.
- It is assumed that there is a single row of balls.
- Considering the equilibrium of forces in the vertical direction,

$$C_o = P_1 + 2P_2 \cos\beta + 2P_3 \cos(2\beta) + \ldots\ldots \qquad \text{(a)}$$

Atmiya University Rajkot

- As the races are rigid, only balls are deformed. Suppose δ1 is the deformation at the most heavily stressed Ball No.1. Due to this deformation, the inner race is deflected with respect to the outer race through δ1.
- As shown in Fig. the centre of the inner ring moves from O to O' through the distance δ_1 without changing its shape.
- Suppose δ_1, δ_2 … are radial deflections at the respective balls.

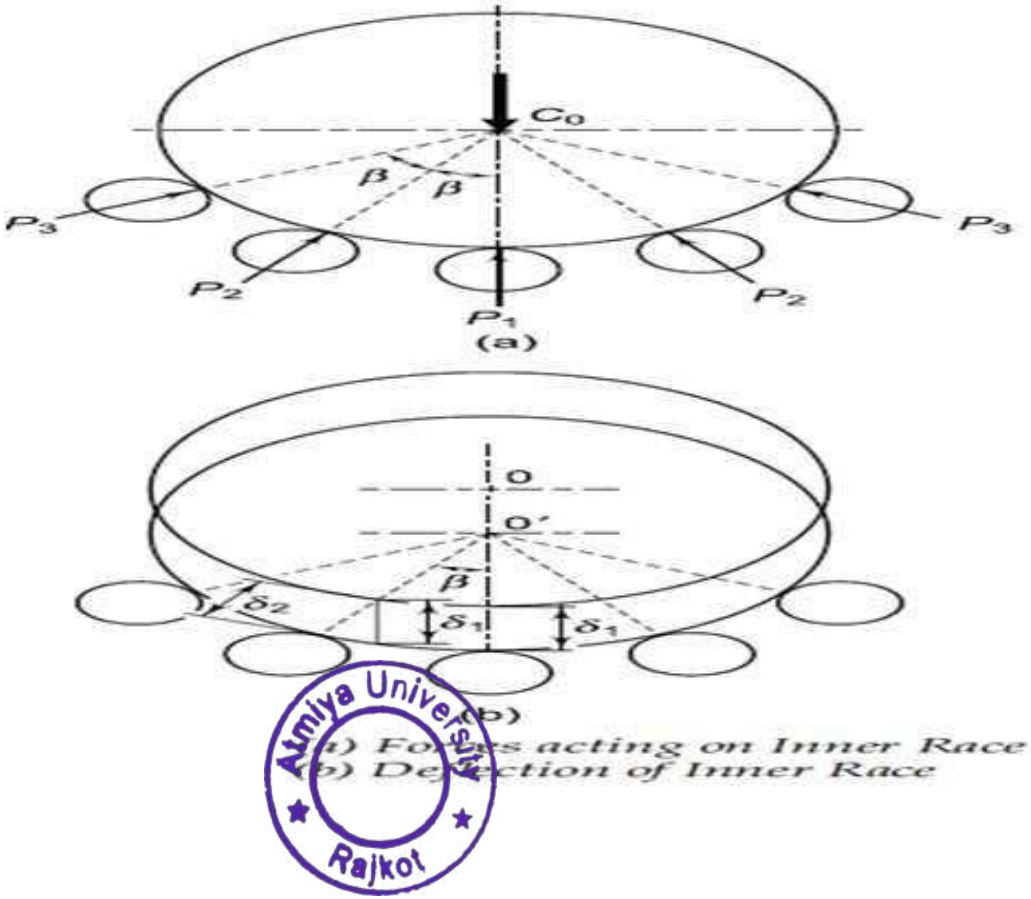

(a) Forces acting on Inner Race
(b) Deflection of Inner Race

Atmiya University Rajkot

Also, $\delta_2 = \delta_1 \cos\beta$ or $\dfrac{\delta_2}{\delta_1} = \cos\beta$ (b)

According to Hertz's equation, the relationship between the load and deflection at each ball is given by,

$$\delta \propto (P)^{2/3}$$

Therefore,

$$\delta_1 = C_1 P_1^{2/3} \quad \text{and} \quad \delta_2 = C_1 P_2^{2/3}$$

$$\therefore \quad \frac{\delta_2}{\delta_1} = \left(\frac{P_2}{P_1}\right)^{2/3} \qquad \text{(c)}$$

From Eq. (b) and (c),

$$\left(\frac{P_2}{P_1}\right)^{2/3} = \cos\beta$$

or $$P_2 = P_1 (\cos\beta)^{3/2}$$

In a similar way,

$$P_3 = P_1 (\cos 2\beta)^{3/2}$$

Substituting these values in Eq. (a),

$$C_0 = P_1 + 2[P_1(\cos\beta)^{3/2}]\cos\beta + 2[P_1(\cos 2\beta)^{3/2}]\cos 2\beta + \ldots\ldots$$

$$= P_1[1 + 2(\cos\beta)^{5/2} + 2(\cos 2\beta)^{5/2} + \ldots..]$$

or $$C_o = P_1 M \qquad \text{(d)}$$

Atmiya University Rajkot
Atmiya University Rajkot

where

$$M = [1 + 2(\cos\beta)^{5/2} + 2(\cos 2\beta)^{5/2} + ...] \qquad \text{(e)}$$

If z is the number of balls,

$$\beta = \frac{360}{z}$$

The values of M for different values of z are tabulated as follows:

Z	8	10	12	15
M	1.84	2.28	2.75	3.47
(z/M)	4.35	4.38	4.36	4.37

It is seen from the above table that (z/M) is practically constant. Stribeck suggested the value for (z/M) as 5.

or $$M = \left(\frac{1}{5}\right)$$

Substituting this value in Eq. (d),

$$C_o = \left(\frac{1}{5}\right) z P_1 \qquad \text{(f)}$$

From experimental evidence, it is found that the force P_1 required to produce a given permanent deformation of the ball is given by,

$$P_1 = kd^2 \qquad \text{(g)}$$

where d is the ball diameter and the factor k depends upon the radii of curvature at the point of contact, and on the modulii of elasticity of materials. From Eqs (f) and (g),

$$C_o = \frac{kd^2 z}{5}$$

The above equation is known as Stribeck's equation.

Atmiya University Rajkot
Atmiya University Rajkot

Dynamic Load Carrying Capacity

- The life of a ball bearing is limited by the fatigue failure at the surfaces of balls and races.
- The dynamic load carrying capacity of the bearing is, therefore, based on the fatigue life of the bearing.
- The life of an individual ball bearing is defined as the number of revolutions (or hours of service at some given constant speed), which the bearing runs before the first evidence of fatigue crack in balls or races.
- Since the life of a single bearing is difficult to predict, it is necessary to define the life in terms of the statistical average performance of a group of bearings.

Atmiya University Rajkot

- Bearings are rated on one of the two criteria—the average life of a group of bearings or the life, which 90% of the bearings will reach or exceed.
- The second criterion is widely used in bearing industry.
- The rating life of a group of identical ball bearings is defined as the number of revolutions that 90% of the bearings will complete or exceed before the first evidence of fatigue crack.
- L_{10} life is generally represented for Rating life of the ball bearings.
- The life of an individual ball bearing may be different from rating life.
- Statistically, it can be proved that the life, which 50% of a group of bearings will complete or exceed, is approximately five times the rating or L_{10} *life*.

Atmiya University Rajkot

- This means that for the majority of bearings, the actual life is considerably more than the rated life.
- The dynamic load carrying capacity of a bearing is defined as the radial load in radial bearings (or thrust load in thrust bearings) that can be carried for a minimum life of one million revolutions.
- The minimum life in this definition is the L_{10} *life, which* 90% of the bearings will reach or exceed before fatigue failure.
- The dynamic load carrying capacity is based on the assumption that the inner race is rotating while the outer race is stationary.
- The formulae for calculating the dynamic load capacity for different types of bearings.
- The manufacturer's catalogues give ready-made values of dynamic load capacities of bearings.

Atmiya University

Equivalent Bearing Load

- In actual applications, the force acting on the bearing has two components – Radial and Axial.
- It is therefore necessary to convert the two components acting on the bearing into a single hypothetical load, fulfilling the conditions applied to the dynamic load carrying capacity.
- The hypothetical load can be compared with the dynamic load capacity.
- The equivalent dynamic load is defined as the constant radial load in radial bearings (or thrust load in thrust bearings), which if applied to the bearing would give same life as that which the bearing will attain under actual condition of forces.

Atmiya University Rajkot

- The expression for the equivalent dynamic load is written as,

$$P = XVF_r + YF_a$$

where,

P = equivalent dynamic load (N)
F_r = radial load (N)
F_a = axial or thrust load (N)
V = race-rotation factor

- X and Y are radial and thrust factors respectively and their values are given in the manufacturer's catalogues.
- The race-rotation factor depends upon whether the inner race is rotating or the outer race.
- The value of V is 1 when the inner race rotates while the outer race is held stationary in the housing.
- The value of V is 1.2 when the outer race rotates with respect to the load, while the inner race remains stationary.

Atmiya University Rajkot

- In most of the applications, the inner race rotates and the outer race is fixed in the housing.
- Assuming *V as* unity, the general equation for equivalent dynamic load is given by,

$$P = XF_r + YF_a$$

- Above equation can be used for calculating equivalent dynamic load.
- The effect of V should be considered in special cases, where the outer race rotates and the inner race is stationary.
- When the bearing is subjected to pure radial load F_r,

$$P = F_r$$

- When the bearing is subjected to pure thrust load F_a,

$$P = F_a$$

Atmiya University Rajkot

Load-life Relationship

- The relationship between the dynamic load carrying capacity, the equivalent dynamic load, and the bearing life is given by,

$$L_{10} = \left(\frac{C}{P}\right)^p$$

where,

L_{10} = rated bearing life (in million revolutions)

C = dynamic load capacity (N), and

$p = 3$ (for ball bearings)

$p = 10/3$ (for roller bearings)

Rearranging Eq. (15.6),

$$C = P\,(L_{10})^{1/p}$$

For all types of ball bearings,

$$C = P\,(L_{10})^{1/3}$$

For all types of roller bearings,

$$C = P\,(L_{10})^{0.3}$$

The relationship between life in million revolutions and life in working hours is given by

$$L_{10} = \frac{60\,n L_{10h}}{10^6}$$

where,

L_{10h} = rated bearing life (hours)

n = speed of rotation (rpm)

Atmiya University Rajkot

Numerical

In a particular application, the radial load acting on a ball bearing is 5 kN and the expected life for 90% of the bearings is 8000 h. Calculate the dynamic load carrying capacity of the bearing, when the shaft rotates at 1450 rpm.

$F_r = 5\ kN$ $\quad L_{10h} = 8000\ h$ $\quad n = 1450\ rpm$

Step I Bearing life (L_{10})

$$L_{10} = \frac{60nL_{10h}}{10^6} = \frac{60(1450)(8000)}{10^6}$$
$$= 696 \text{ million rev.}$$

Step II Dynamic load capacity

- Since the bearing is subjected to purely radial load,
- $P = F_r = 5000\ N$
- $C = P(L_{10})^{1/3} = (5000)(696)^{1/3} = 44\ 310.48\ N$

Amiya University Rajkot

Numerical for Practice

A taper roller bearing has a dynamic load capacity of 26 kN. The desired life for 90% of the bearings is 8000 h and the speed is 300 rpm. Calculate the equivalent radial load that the bearing can carry.

ANSWER:- P = 5854.16 N

Atmiya University Rajkot

Selection of Bearing Life

- While selecting the proper size of a bearing, it is necessary to specify the expected life of the bearing for the given application.
- The information regarding the life expectancy is generally vague and values based on past experience are used.
- For all kinds of vehicles, the speed of rotation is not constant and the desired life is expressed in terms of millions of revolutions.
- The recommended bearing life for wheel applications is given in below table.

Wheel application	*Life (million rev.)*
Automobile cars	50
Trucks	100
Trolley cars	500
Railroad cars	1000

Amity University Rajasthan

- In the other applications, the speed of rotation is relatively constant and the desired life is expressed in terms of hours of service.
- The recommended bearing life for some of the applications is given in table.

(i)	Machines used intermittently such as lifting tackle, hand tools and household appliances	4000–8000 h
(ii)	Machines used for eight hours of service per day, such as electric motors and gear drives	12 000–20 000 h
(iii)	Machines used for continuous operation (24 h per day) such as pumps, compressors and conveyors	40 000–60 000 h

- The values given in the above tables are only for general guidance.
- For a particular application, the designer should consider the past experience, the difficulties faced by the customer in replacing the bearing and the economics of breakdown costs.

Ramiya University Rajkot

Selection of Bearing from Manufacturer's Catalogue

- The basic procedure for the selection of a bearing from the manufacturer's catalogue consists of the following steps:

(i) Calculate the radial and axial forces acting on the bearing and determine the diameter of the shaft where the bearing is to be fitted.

(ii) Select the type of bearing for the given application.

(iii) Determine the values of *X and Y, the radial* and thrust factors, from the catalogue. The values of *X and Y factors for single-row* deep groove ball bearings are given in table.

- The values depend upon two ratios,

$$\left(\frac{F_a}{F_r}\right) \text{ and } \left(\frac{F_a}{C_0}\right),$$

Atmiya University Rajkot

- where C_0 *is the* static load capacity. The selection of the bearing is, therefore, done by trial and error.
- The static and dynamic load capacities of single-row deep groove ball bearings of different series are given table.
- To begin with, a bearing of light series, such as 60, is selected for the given diameter of the shaft and the value of C_0 is found from table.
- Knowing the ratios, the values of *X and Y factors are found from table.*

$$\left(\frac{F_a}{F_r}\right) \text{ and } \left(\frac{F_a}{C_0}\right),$$

(iv) Calculate the equivalent dynamic load from the equation.

$$P = XF_r + YF_a$$

Atmiya University Rajkot

(v) Make a decision about the expected bearing life and express the life L_{10} *in million* revolutions.

(vi) Calculate the dynamic load capacity from the equation.

$$C = P\,(L_{10})^{1/3}$$

(vii) Check whether the selected bearing of series 60 has the required dynamic capacity. If not, select the bearing of the next series and go back to Step (iii) and continue.

- The above procedure is also applicable to other types of bearings.

X and Y factors for single-row deep groove ball bearings[3]

$\left(\frac{F_a}{C_0}\right)$	$\left(\frac{F_a}{F_r}\right) \le e$		$\left(\frac{F_a}{F_r}\right) > e$		e
	X	Y	X	Y	
0.025	1	0	0.56	2.0	0.22
0.040	1	0	0.56	1.8	0.24
0.070	1	0	0.56	1.6	0.27
0.130	1	0	0.56	1.4	0.31
0.250	1	0	0.56	1.2	0.37
0.500	1	0	0.56	1.0	0.44

Atmiya University Rajkot

- In order to explain the selection procedure, let us consider a numerical example.
- Suppose it is required to select a single-row deep groove ball bearing, for a shaft that is 75 mm in diameter and which rotates at 125 rpm. The bearing is subjected to a radial load of 21 kN and there is no thrust load. The expected life of the bearing is 10000 hours.

Step (i)

$F_r = 21\,000$ N $\quad F_a = 0 \quad d = 75$ mm

Step (ii) Type: single-row deep groove ball bearing

Step (iii) Since there is no axial load,

$$P = F_r = 21\,000 \text{ N}$$

Step (iv) $$L_{10} = \frac{60\,n\,L_{10h}}{10^6} = \frac{60\,(125)(10\,000)}{10^6}$$

$$= 75 \text{ million rev.}$$

Step (v) $$C = P\,(L_{10})^{1/3} = 21\,000\,(75)^{1/3}$$

$$= 88\,560.43 \text{ N}$$

Step (vi) It is observed from Table that following bearings are available with 75 mm bore diameter,

No. 6015 (C = 39 700 N)
No. 6215 (C = 63 500 N)
No. 6315 (C = 112 000 N)
No. 6415 (C = 153 000 N)

Therefore, bearing No. 6315 is selected for the above application.

Atmiya University Rajkot

Dimensions and static and dynamic load capacities of single-row deep groove ball bearings[4]

Principal dimensions (mm)			Basic load ratings (N)		Designation
d	D	B	C	C_0	
10	19	5	1480	630	61800
	26	8	4620	1960	6000
	30	9	5070	2240	6200
	35	11	8060	3750	6300

(*Contd*)

Atmiya University Rajkot
Atmiya University Rajkot

Principal dimensions (mm)			Basic load ratings (N)		Designation
d	D	B	C	C_0	
12	21	5	1430	695	61801
	28	8	5070	2240	6001
	32	10	6890	3100	6201
	37	12	9750	4650	6301
15	24	5	1560	815	61802
	32	9	5590	2500	6002
	35	11	7800	3550	6202
	42	13	11400	5400	6302
17	26	5	1680	930	61803
	35	10	6050	2800	6003
	40	12	9560	4500	6202
	47	14	13500	6550	6303
	62	17	22900	11800	6403
20	32	7	2700	1500	61804
	42	8	7020	3400	16404
	42	12	9360	4500	6004
	47	14	12700	6200	6204
	52	15	15900	7800	6304
	72	19	30700	16600	6404
25	37	7	3120	1960	61805
	47	8	7610	4000	16005
	47	12	11200	[illegible]	6005
	52	15	14000	[illegible]	6205
	62	17	225[illegible]	1140[illegible]	6305
	80	21	358[illegible]	19600	6405
30	42	7	3120	2000	61806
	55	9	11200	[illegible]	16006
	55	13	13300	6800	6006
	62	16	19500	10000	6206
	72	19	28100	14600	6306
	90	23	43600	24000	6406
35	47	7	4030	3000	61807
	62	9	12400	6950	16007
	62	14	15900	8500	6007
	72	17	25500	13700	6207
	80	21	33200	18000	6307
	100	25	55300	31000	6407

(Contd)

Principal dimensions (mm)			Basic load ratings (N)		Designation
d	D	B	C	C_0	
40	52	7	4160	3350	61808
	68	9	13300	7800	16008
	68	15	16800	9300	6008
	80	18	30700	16600	6208
	90	23	41000	22400	6308
	110	27	63700	36500	6408
45	58	7	6050	3800	61809
	75	10	15600	9300	16009
	75	16	21200	12200	6009
	85	19	33200	18600	6209
	100	25	52700	30000	6309
	120	29	76100	45500	6409
50	65	7	6240	4250	61810
	80	10	16300	10000	16010
	80	16	21600	13200	6010
	90	20	35100	19600	6210
	110	27	61800	36000	6310
	130	31	87100	52000	6410
55	72	9	8320	5600	61811
	90	11	19500	12200	16011
	90	18	28100	17000	6011
	100	21	43600	25000	6211
	120	29	71500	41500	6311
	140	33	99500	63000	6411
60	78	10	8710	6100	61812
	95	11	19900	13200	16012
	95	18	29600	18300	6012
	110	22	47500	28000	6212
	130	31	81900	48000	6312
	150	35	108000	69500	6412
65	85	10	11700	8300	61813
	100	11	21200	14600	16013
	100	18	30700	19600	6013
	120	23	55900	34000	6213
	140	33	92300	56000	6313
	160	37	119000	78000	6413

(Contd)

Atmiya University Rajkot

Principal dimensions (mm)			Basic load ratings (N)		Designation
d	D	B	C	C_0	
70	90	10	12100	9150	61814
	110	13	28100	19000	16014
	110	20	37700	24500	6014
	125	24	61800	37500	6214
	150	35	104000	63000	6314
	180	42	143000	104000	6414
75	95	10	12500	9800	61815
	115	13	28600	20000	10615
	115	20	39700	26000	6015
	130	25	66300	40500	6215
	160	37	112000	72000	6315
	190	45	153000	114000	6415

Atmiya University Rajkot
Atmiya University Rajkot

- While selecting a ball bearing from the manufacturer's catalogue, very often a term '*series*' of the bearing is used. Some manufacturers use terms such as light series, medium series and heavy series.
- For a given diameter of the shaft, the dimensions of balls and races are smaller in the light series.
- The load capacities are less and cost is also less.
- For the same shaft diameter, the dynamic load carrying capacity of the bearing belonging to the heavy series is more and the cost is also more.
- The trial and error method for the selection of a ball bearing begins with the light series.
- If that is not suitable, a medium series bearing is selected. The last choice is the costliest heavy series bearing.

Atmiya University Rajkot

- A rolling contact bearing is usually designated by three or four digits. The meaning of these digits is as follows:

(i) The last two digits indicate the bore diameter of the bearing in mm (bore diameter divided by 5). For example, XX07 indicates a bearing of 35 mm bore diameter.

(ii) The third digit from the right indicates the series of the bearing. The numbers used to indicate the series are as follows:

Extra light series –1

Light series – 2

Medium series – 3

Heavy series – 4

- For example, X307 indicates a medium series bearing with a bore diameter of 35 mm.

Atmiya University Rajkot

(iii) The fourth digit and sometimes fifth digit from the right specifies the type of rolling contact bearing. For example, the digit 6 indicates deep groove ball bearings.

- Light series bearings permit smallest bearing width and outer diameter for a given bore diameter.
- They have lowest load carrying capacities.
- Medium series bearings have 30 to 40 percent higher dynamic load carrying capacities compared with light series bearings of the same bore diameter.
- They occupy more radial and axial space.
- Heavy series bearings have 20 to 30 percent higher dynamic load carrying capacities compared with medium series bearings of the same bore diameter.

Atmiya University Rajkot

NUMERICALS

1) Single-row deep groove ball bearing is subjected to a pure radial force of 3 kN from a shaft that rotates at 600 rpm. The expected Life L_{10h} of the bearing is 30000 h. The minimum acceptable diameter of the shaft is 40 mm. **Select a suitable ball bearing for this application.**

Given $F_r = 3$ kN $L_{10h} = 30\,000$ h $n = 600$ rpm $d = 40$ mm

Step I *Dynamic load capacity*

The bearing is subjected to pure radial load.

$\therefore \quad P = F_r = 3000$ N

$$L_{10} = \frac{60n\,L_{10h}}{10^6} = \frac{60(600)(30000)}{10^6}$$

$= 1080$ million rev.

From Eq. (15.7),

$$C = P\,(L_{10})^{1/3} = (3000)(1080)^{1/3} = 30\,779.57 \text{ N}$$

Step II *Selection of bearing*

six different bearings are available for the shaft diameter of 40 mm. They are 61808, 16008, 6008, 6208, 6308 and 6408. Out of these, Bearing No. 6208 ($C = 30\,700$ N) is suitable for the above application. The small difference between the expected and actual dynamic capacities, viz., ($30\,779.57 - 30\,700 = 79.57$ N) is considered to be negligible.

Atmiya University Rajkot

- 2) A single-row deep groove ball bearing is subjected to a radial force of 8 kN and a thrust force of 3 kN. The shaft rotates at 1200 rpm. The expected life L10h of the bearing is 20000 h. The minimum acceptable diameter of the shaft is 75 mm. Select a suitable ball bearing for this application.

Given $F_r = 8$ kN $F_a = 3$ kN $L_{10h} = 20\,000$ hr
$n = 1200$ rpm $d = 75$ mm

- **Step I:- X and Y factors**
- When the bearing is subjected to radial as well as axial load, the values of *X and Y factors are obtained from* table by trial and error procedure.
- It is observed from table, that values of X are constant and the values of Y vary only in case when,

Atmiya University Rajkot

$$\left(\frac{F_a}{F_r}\right) > e$$

- In this case, the value of Y varies from 1.0 to 2.0. We will assume the average value 1.5 as the first trial value for the factor *Y. Therefore,*

$$X = 0.56 \quad Y = 1.5 \quad F_r = 8000 \text{ N} \quad F_a = 3000 \text{ N}$$

$$P = XF_r + YF_a = 0.56(8000) + 1.5(3000) = 8980 \text{ N}$$

$$L_{10} = \frac{60n\,L_{10h}}{10^6} = \frac{60(1200)(20\,000)}{10^6}$$

$$= 1440 \text{ million rev.}$$

$$C = P\,(L_{10})^{1/3} = (8980)(1440)^{1/3} = 101\,406.04 \text{ N}$$

- From table, it is observed that for the shaft of 75 mm diameter, Bearing No. 6315 (*C = 112000*) is suitable for the above data. For this bearing,

$$C_o = 72000 \text{ N}$$

Therefore,

$$\left(\frac{F_a}{F_r}\right) = \left(\frac{3000}{8000}\right) = 0.375$$

and

$$\left(\frac{F_a}{C_o}\right) = \left(\frac{3000}{72000}\right) = 0.04167$$

Atmiya University Rajkot

Referring to table,

$$e = 0.24 \text{ (approximately)} \quad \text{and} \quad \left(\frac{F_a}{F_r}\right) > e$$

The value of Y is obtained by linear interpolation.

$$Y = 1.8 - \frac{(1.8 - 1.6)}{(0.07 - 0.04)} \times (0.04167 - 0.04) = 1.79$$

and $\quad X = 0.56$

$$y = y_1 + (x - x_1)\frac{(y_2 - y_1)}{(x_2 - x_1)}$$

Y = 1.811

Step II:- Dynamic load capacity (Take Y = 1.811)

$$P = XF_r + YF_a = 0.56(8000) + 1.79(3000) = 9850 \text{ N}$$

$$C = P\,(L_{10})^{1/3} = 9850\,(1440)^{1/3} = 111\,230.46 \text{ N}$$

Step III:- Selection of bearing

From table, Bearing No. 6315 (*C = 112000) is* suitable for the above application.

Note:- Linear interpolation is a process of finding new value from straight line drawn between two co-ordinate points. From the known two values (x_1, y_1) and (x_2, y_2), you can find the y value, which is an unknown value at x point using the below given formula.

Kampala University Bethel

A single-row deep groove ball bearing No. 6002 is subjected to an axial thrust of 1000 N and a radial load of 2200 N. **Find the expected life that 50% of the bearings will complete under this condition.**

Given:- $F_a = 1000\ N$ $F_r = 2200\ N$ Bearing = No. 6002

- ***Step I X and Y factors***

Referring to Table the capacities of bearing No. 6002 are,

$C_o = 2500\ N$ *and* $C = 5590\ N$

$F_a = 1000\ N$ $F_r = 2200\ N$

$$\left(\frac{F_a}{F_r}\right) = \left(\frac{1000}{2200}\right) = 0.455$$

$$\left(\frac{F_a}{C_o}\right) = \left(\frac{1000}{2500}\right) = 0.4$$

Referring to Table , $\left(\frac{F_a}{F_r}\right)$

Atmiya University Rajkot

- The value of *Y is obtained by linear* interpolation.

$$Y = 1.2 - \frac{(1.2 - 1.0)}{(0.5 - 0.25)} \times (0.4 - 0.25) = 1.08 \text{ and}$$
$$X = 0.56$$

- **Step II Bearing life (L_{10})**

$$P = XF_r + YF_a = 0.56(2200) + 1.08(1000)$$
$$= 2312 \text{ N}$$

$$C = P\,(L_{10})^{1/3} \qquad 5590 = 2312\,(L_{10})^{1/3}$$

Therefore, L_{10} = 14.13 million rev.

Step III Bearing life (L_{50})

- It can be proved that the life *(L_{50}), which 50% of the* bearings will complete or exceed, is approximately five times the life *L_{10} which 90% of the bearings* will complete or exceed.
- **Therefore, L_{50} = 5L_{10} = 5 (14.13) = 70.65 million rev.**

Atmiya University Rajkot

DESIGN FOR CYCLIC LOADS AND SPEEDS

- In certain applications, ball bearings are subjected to cyclic loads and speeds. As an example, consider a ball bearing operating under the following conditions:

(i) radial load 2500 N at 700 rpm for 25% of the time,

(ii) radial load 5000 N at 900 rpm for 50% of the time, and

(iii) radial load 1000 N at 750 rpm for the remaining 25% of the time.

- Under these circumstances, it is necessary to consider the complete work cycle while finding out the dynamic load capacity of the bearing.
- The procedure consists of dividing the work cycle into a number of elements, during which the operating conditions of load and speed are constant.

Atmiya University Rajkot

- Suppose that the work cycle is divided into *x* elements. Let $P_1, P_2, \ldots P_x$ *be the loads and* $n_1, n_2, \ldots, n_x$ *be the speeds during these elements. During* the first element, the life L_1 *corresponding to load* P_1*, is given by*

$$L_1 = \left(\frac{C}{P_1}\right)^3 \times 10^6 \text{ rev.}$$

In one revolution, the life consumed is $\left(\frac{1}{L_1}\right)$ or $\left(\frac{P_1^3}{C^3} \times \frac{1}{10^6}\right)$

- Let us assume that the first element consists of N_1 revolutions. Therefore, the life consumed by the first element is given by,

$$\frac{N_1 P_1^3}{10^6 C^3}$$

- Similarly, the life consumed by the second element is given by,

Atmiya University Rajkot

- Similarly, the life consumed by the second element is given by,

$$\frac{N_2 P_2^3}{10^6 C^3}$$

- Adding these expressions, the life consumed by the complete work cycle is given by,

$$\frac{N_1 P_1^3}{10^6 C^3} + \frac{N_2 P_2^3}{10^6 C^3} + \cdots + \frac{N_x P_x^3}{10^6 C^3} \quad \text{a}$$

- If P_e *is the equivalent load for the complete work* cycle, the life consumed by the work cycle is given by,

$$\frac{N P_e^3}{10^6 C^3} \quad \text{b}$$

where, $N = N_1 + N_2 + \ldots + N_x$

Equating expressions (a) and (b),

$$N_1 P_1^3 + N_2 P_2^3 + \ldots + N_x P_x^3 = N P_e^3$$

or

$$P_e = \sqrt[3]{\left[\frac{N_1 P_1^3 + N_2 P_2^3 + \cdots}{N_1 + N_2 + \cdots}\right]}$$

or

$$P_e = \sqrt[3]{\left[\frac{\Sigma N P^3}{\Sigma N}\right]}$$

Atmiya University Rajkot

where, $N = N_1 + N_2 + \ldots + N_x$

Equating expressions (a) and (b),

$$N_1 P_1^3 + N_2 P_2^3 + \ldots + N_x P_x^3 = N P_e^3$$

or $$P_e = \sqrt[3]{\left[\frac{N_1 P_1^3 + N_2 P_2^3 + \cdots}{N_1 + N_2 + \cdots}\right]}$$

or $$P_e = \sqrt[3]{\left[\frac{\Sigma N P^3}{\Sigma N}\right]}$$

- The above equation is used for calculating the dynamic load capacity of a bearing,
- When the load does not vary in steps of constant magnitude, but varies continuously with time, the above equation is modified and written as,

$$P_e = \left[\frac{\int_0^N P^3 dN}{\int_0^N dN}\right]^{1/3}$$

$$P_e = \left[\frac{1}{N}\int P^3 dN\right]^{1/3}$$

- In case of bearings, where there is a combined radial and axial load, it should be first converted into equivalent dynamic load before the above computations are carried out.

Arsiya University Raikot

Examples

A single-row deep groove ball bearing has a dynamic load capacity of 40500 N and operates on the following work cycle:

(i) radial load of 5000 N at 500 rpm for 25% of the time

(ii) radial load of 10000 N at 700 rpm for 50% of the time; and

(iii) radial load of 7000 N at 400 rpm for the remaining 25% of the time.

Calculate the expected life of the bearing in hours.

Solution:-

Given *C = 40500 N*

Step I Equivalent load for complete work cycle

Consider the work cycle of one minute duration. The values of load *P and revolutions N are tabulated* as follows:

Atmiya University Rajkot

- Prepare a Table as follows,
- The values of load *P and revolutions N are tabulated* as follows:

Element No.	*P (N)*	*Element time (minute)*	*Speed (rpm)*	*Revolutions N in element time*
1	5000	0.25	500	125
2	10000	0.5	700	350
3	7000	0.25	400	100
Total		1.00		575

$$P_e = \sqrt[3]{\left[\frac{N_1P_1^3 + N_2P_2^3 + N_3P_3^3}{N_1 + N_2 + N_3}\right]}$$

$$= \sqrt[3]{\left[\frac{125(5000)^3 + 350(10000)^3 + 100(7000)^3}{575}\right]}$$

$$= 8860.06 \text{ N}$$

Atmiya University Rajkot

Step II Bearing life ($L10_h$)

- According to the load life relationship,

$$L_{10} = \left(\frac{C}{P_e}\right)^3 = \left(\frac{40\,500}{8860.06}\right)^3 = 95.51 \text{ million rev.}$$

$$L_{10h} = \frac{L_{10} \times 10^6}{60n} = \frac{95.51 \times 10^6}{60(575)} = 2768.45 \text{ h}$$

Atmiya University
Rajkot

A ball bearing is operating on a work cycle consisting of three parts—a radial load of 3000 N at 1440 rpm for one quarter cycle, a radial load of 5000 N at 720 rpm for one half cycle, and radial load of 2500 N at 1440 rpm for the remaining cycle. The expected life of the bearing is 10 000 h. Calculate the dynamic load carrying capacity of the bearing.

Solution

Given L_{10h} = *10 000 h*

Step I Equivalent load for complete work cycle

Considering the work cycle of one minute duration,

$$N_1 = \frac{1}{4}(1440) = 360 \text{ rev.}$$

$$N_2 = \frac{1}{2}(720) = 360 \text{ rev.}$$

$$N_3 = \frac{1}{4}(1440) = 360 \text{ rev.}$$

Atmiya University Rajkot

The average speed of rotation is given by,

$$n = N_1 + N_2 + N_3 = 1080 \text{ rpm}$$

$$P_e = \sqrt[3]{\left[\frac{N_1 P_1^3 + N_2 P_2^3 + N_3 P_3^3}{N_1 + N_2 + N_3}\right]}$$

$$= \sqrt[3]{\left[\frac{360(3000)^3 + 360(5000)^3 + 360(2500)^3}{1080}\right]}$$

$$= 3823 \text{ N}$$

Step II Dynamic load carrying capacity of bearing

$$L_{10} = \frac{60 n L_{10h}}{10^6} = \frac{60(1080)(10\,000)}{10^6}$$

$$= 648 \text{ million rev.}$$

$$C = P(L_{10})^{1/3} = 3823(648)^{1/3} = 33\,082 \text{ N}$$

Atmiya University Rajkot

A single-row deep groove ball bearing is subjected to a 30 second work cycle that consists of the following two parts:

	Part I	*Part II*
duration (s)	*10*	*20*
radial load (kN)	*45*	*15*
axial load (kN)	*12.5*	*6.25*
speed (rpm)	*720*	*1440*

The static and dynamic load capacities of the ball bearing are 50 and 68 kN respectively. Calculate the expected life of the bearing in hours.

Solution

Given *Co = 50 kN C = 68 kN*

Step I Equivalent load for complete work cycle

For Part I,

Atmiya University Rajkot

$$\left(\frac{F_a}{F_r}\right) = \left(\frac{12.5}{45}\right) = 0.278$$

and $$\left(\frac{F_a}{C_o}\right) = \left(\frac{12.5}{50}\right) = 0.25$$

From Table 15.4, $e = 0.37$

$\therefore$ $$\left(\frac{F_a}{F_r}\right) < e$$

$\therefore$ $X = 1 \qquad Y = 0$

$$P_1 = F_r = 45\,000 \text{ N}$$

also $$N_1 = \frac{10}{60} \times (720) = 120 \text{ N}$$

For Part II,

$$\left(\frac{F_a}{F_r}\right) = \left(\frac{6.25}{15}\right) = 0.417$$

and $$\left(\frac{F_a}{C_o}\right) = \left(\frac{6.25}{50}\right) = 0.125$$

From Table 15.4, $e = 0.31$ (approximately)

$\therefore$ $$\left(\frac{F_a}{F_r}\right) > e$$

Atmiya University Rajkot
Atmiya University Rajkot

Assuming linear interpolation,

$$Y = 1.6 - \frac{(1.6 - 1.4)}{(0.130 - 0.07)} \times (0.125 - 0.07)$$

$$= 1.42 \text{ and } X = 0.56$$

$$P_2 = XF_r + YF_a = 0.56(15\,000) + 1.42(6250)$$

$$= 17\,275 \text{ N}$$

$$N_2 = \frac{20}{60} \times (1440) = 480 \text{ rev.}$$

$$N_1 + N_2 = 120 + 480 = 600 \text{ rev.}$$

The number of revolutions completed in one work cycle of 30 second duration is 600. Therefore, 1200 revolutions will be completed in one minute. Or,

$$n = 1200 \text{ rpm}$$

From Eq. (15.15)

$$P_e = \sqrt[3]{\left[\frac{N_1 P_1^3 + N_2 P_2^3}{N_1 + N_2}\right]}$$

$$= \sqrt[3]{\left[\frac{120(45\,000)^3 + 480(17\,275)^3}{600}\right]}$$

$$= 28\,167.89 \text{ N}$$

Atmiya University Rajkot

Step II Bearing life (L_{10h})

$$L_{10} = \left(\frac{C}{P_e}\right)^3 = \left(\frac{68000}{28167.89}\right)^3 = 14.069 \text{ million rev.}$$

$$L_{10h} = \frac{L_{10} \times 10^6}{60\,n} = \frac{14.069 \times 10^6}{60(1200)} = 195.4 \text{ h}$$

Atmiya University
Rajkot

BEARING WITH A PROBABILITY OF SURVIVAL OTHER THAN 90 PER CENT

- In the definition of rating life, it is mentioned that the rating life is the life that 90% of a group of identical bearings will complete or exceed before fatigue failure. The reliability *R is defined as,*

$$R = \frac{\text{No. of bearings which have successfully completed } L \text{ million revolutions}}{\text{Total number of bearings under test}}$$

- Therefore, the reliability of bearings selected from the manufacturer's catalogue is 0.9 or 90%.
- In certain applications, where there is risk to human life, it becomes necessary to select a bearing having a reliability of more than 90%.
- Figure shows the distribution of bearing failures. The relationship between bearing life and reliability is given by a statistical curve known as *Wiebull distribution.*

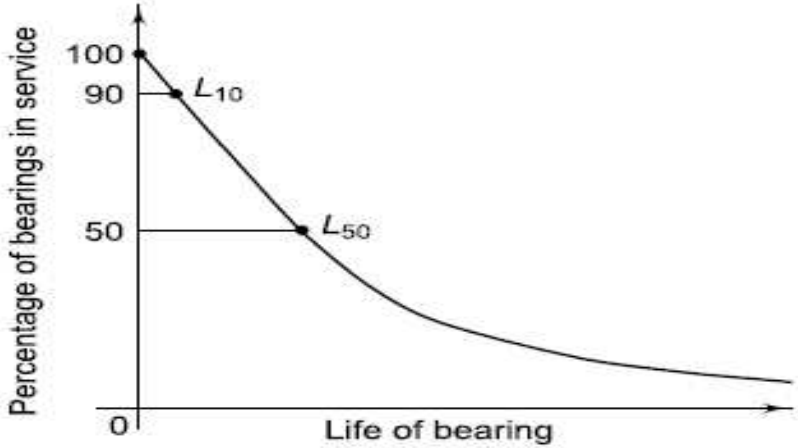

For Wiebull distribution,

$$R = e^{-(L/a)^b} \tag{15.16}$$

where R is the reliability (in fraction), L is the corresponding life and a and b are constants. Rearranging the above equation, we have

$$\left(\frac{1}{R}\right) = e^{(L/a)^b}$$

or

$$\log_e\left(\frac{1}{R}\right) = \left(\frac{L}{a}\right)^b \tag{a}$$

If L_{10} is the life corresponding to a reliability of 90% or R_{90} then,

$$\log_e\left(\frac{1}{R_{90}}\right) = \left(\frac{L_{10}}{a}\right)^b \tag{b}$$

Dividing Eq. (a) by Eq. (b), we have

$$\left(\frac{L}{L_{10}}\right) = \left[\frac{\log_e\left(\frac{1}{R}\right)}{\log_e\left(\frac{1}{R_{90}}\right)}\right]^{1/b} \tag{15.17}$$

where $R_{90} = 0.9$

The values of a and b are

$$a = 6.84 \quad \text{and} \quad b = 1.17$$

Atmiya University Rajkot

These values are obtained from the condition,

$$L_{50} = 5L_{10} \tag{15.18}$$

where L_{50} is the median life or life which 50% of the bearings will complete or exceed before fatigue failure. Equation (15.17) is used for selecting the bearing when the reliability is other than 90%.

In a system, if there are a number of bearings, the individual reliability of each bearing should be fairly high. If there are N bearings in the system, each having the same reliability R then the reliability of the complete system is given by,

$$R_s = (R)^N \tag{15.19}$$

where R_s indicates the probability of one out of N bearings failing during its lifetime.

Atmiya University Rajkot

Atmiya University Rajkot

A single-row deep groove ball bearing is subjected to a radial force of 8 kN and a thrust force of 3 kN. The values of X and Y factors are 0.56 and 1.5 respectively. The shaft rotates at 1200 rpm. The diameter of the shaft is 75 mm and Bearing No. 6315 (C =112 000 N) is selected for this application.

(i) Estimate the life of this bearing, with 90% reliability.

(ii) Estimate the reliability for 20 000 h life.

Solution:-

Given:- ***Fr = 8 kN Fa = 3 kN X = 0.56 Y = 1.5***

n = 1200 rpm d = 75 mm C = 112 000 N

Step 1 Bearing life with 90% reliability:-

Atmiya University Rajkot

$$P = XF_r + YF_a = 0.56\,(8000) + 1.5\,(3000)$$
$$= 8980 \text{ N}$$

$$L_{10} = \left(\frac{C}{P}\right)^3 = \left(\frac{112\,000}{8980}\right)^3 = 1940.10 \text{ million rev.}$$

$$L_{10h} = \frac{L_{10}(10^6)}{60n} = \frac{1940.10(10^6)}{60(1200)} = 26\,945.83 \text{ h} \quad \text{(i)}$$

Step II *Reliability for 20 000 hr life*

$$\left(\frac{L}{L_{10}}\right) = \left[\frac{\log_e\left(\frac{1}{R}\right)}{\log_e\left(\frac{1}{R_{90}}\right)}\right]^{1/b}$$

or

$$\left(\frac{L}{L_{10}}\right)^b = \left[\frac{\log_e\left(\frac{1}{R}\right)}{\log_e\left(\frac{1}{R_{90}}\right)}\right]$$

Substituting the following values,
$L = 20\,000$ h $\quad L_{10} = 26\,945.83$ h $\quad R_{90} = 0.90$
$b = 1.17$ we get,

$$\left(\frac{20\,000}{26\,945.83}\right)^{1.17} = \left[\frac{\log_e\left(\frac{1}{R}\right)}{\log_e\left(\frac{1}{0.90}\right)}\right]$$

$$R = 0.9283 \text{ or } 92.83\% \quad \text{(ii)}$$

Atmiya University Rajkot
Atmiya University Rajkot

- A ball bearing, subjected to a radial load of 5 kN, is expected to have a life of 8000 h at 1450 rpm with a reliability of 99%. Calculate the dynamic load capacity of the bearing, so that it can be selected from the manufacturer's catalogue based on a reliability of 90%.

- **Solve by yourself**

Atmiya University
Rajkot

Single-row deep groove ball bearing is used to support the lay shaft of a four speed automobile gear box. It is subjected to the following loads in respective speed ratios:

Gear	*Axial load (N)*	*Radial load (N)*	*% time engaged*
First gear	3250	4000	1%
Second gear	500	2750	3%
Third gear	50	2750	21%
Fourth gear	Nil	Nil	75%

The lay shaft is fixed to the engine shaft and rotates at 1750 rpm. The static and dynamic load carrying capacities of the bearing are 11600 and 17600 N respectively. The bearing is expected to be in use for 4000 hours of operation. Find out the reliability with which the life could be expected.

Solution

Given:- $n = 1750$ *rpm* $C_o = 11\,600$ *N*

$C = 17\,600$ *N* $L_h = 4000$ *h*

Atmiya University Rajkot

Step I:- Equivalent load for complete work cycle

Considering the work cycle of one minute duration,

$$N_1 = \frac{1}{100}(1750) = 17.50 \text{ rev.}$$

$$N_2 = \frac{3}{100}(1750) = 52.50 \text{ rev.}$$

$$N_3 = \frac{21}{100}(1750) = 367.50 \text{ rev.}$$

$$N_4 = \frac{75}{100}(1750) = 1312.50 \text{ rev.}$$

$$(N_1 + N_2 + N_3 + N_4) = 1750 \text{ rev.}$$

First gear

$$\left(\frac{F_a}{F_r}\right) = \left(\frac{3250}{4000}\right) = 0.8125$$

and $$\left(\frac{F_a}{C_o}\right) = \left(\frac{3250}{11600}\right) = 0.28$$

From Table 15.4, it is observed that the value of e will be from 0.37 to 0.44.

$$\therefore \quad \left(\frac{F_a}{F_r}\right) > e$$

The value of factor Y is obtained by linear interpolation.

$$Y = 1.2 - \frac{(1.2 - 1.0)}{(0.5 - 0.25)} \times (0.28 - 0.25) = 1.176$$

and $X = 0.56$

Atmiya University Rajkot

$$P_1 = XF_r + YF_a = 0.56(4000) + 1.176(3250)$$
$$= 6062 \text{ N}$$

Second gear

$$\left(\frac{F_a}{F_r}\right) = \left(\frac{500}{2750}\right) = 0.182$$

and $$\left(\frac{F_a}{C_o}\right) = \left(\frac{500}{11600}\right) = 0.0431$$

From Table 15.4, it is observed that the value of e will be from 0.24 to 0.27.

$$\therefore \quad \left(\frac{F_a}{F_r}\right) < e$$

From Eq. (15.4),

$$P_2 = F_r = 2750 \text{ N}$$

Third gear

$$\left(\frac{F_a}{F_r}\right) = \left(\frac{50}{2750}\right) = 0.0182$$

Atmiya University Rajkot
Atmiya University Rajkot

and $$\left(\frac{F_a}{C_o}\right) = \left(\frac{50}{11600}\right) = 0.00431$$

From Table 15.4, it is observed that the value of e will be 0.22 or less. Assuming,

$$\therefore \quad \left(\frac{F_a}{F_r}\right) < e$$

$$P_3 = F_r = 2750 \text{ N}$$

Fourth gear

$$P_4 = 0$$

$$P_e = \sqrt[3]{\left[\frac{N_1P_1^3 + N_2P_2^3 + N_3P_3^3 + N_4P_4^3}{N_1 + N_2 + N_3 + N_4}\right]}$$

$$= \sqrt[3]{\left[\frac{17.5(6062)^3 + 52.5(2750)^3 + 367.5(2750)^3 + 1312.5(0)}{1750}\right]}$$

$$= 1932.67 \text{ N}$$

Atmiya University Rajkot

Step II *Bearing life L_{10} and L*

$$L_{10} = \left(\frac{C}{P}\right)^3 = \left(\frac{17\,600}{1932.67}\right)^3 = 755.2 \text{ million rev.}$$

$$L = \frac{60nL_h}{10^6} = \frac{60\,(1750)(4000)}{10^6} = 420 \text{ million rev.}$$

Step III *Reliability of bearing*

From Eq. (15.17),

$$\left(\frac{L}{L_{10}}\right) = \left[\frac{\log_e\left(\frac{1}{R}\right)}{\log_e\left(\frac{1}{R_{90}}\right)}\right]^{1/b}$$

or

$$\left(\frac{L}{L_{10}}\right)^b = \left[\frac{\log_e\left(\frac{1}{R}\right)}{\log_e\left(\frac{1}{R_{90}}\right)}\right]$$

Substituting the following values,

$L = 420$ million rev. $L_{10} = 755.2$ million rev.

$R_{90} = 0.90$ $b = 1.17$

we get,

$$\left(\frac{420}{755.2}\right)^{1.17} = \left[\frac{\log_e\left(\frac{1}{R}\right)}{\log_e\left(\frac{1}{0.90}\right)}\right]$$

$\therefore$ $R = 0.9483$ or 94.83%

Atmiya University Rajkot

BEARING FAILURE—CAUSES AND REMEDIES

- There are two basic types of bearing failure — breakage of parts like races or cage and the surface destruction.
- The fracture in the outer race of the ball bearing occurs due to overload.
- When the bearing is misaligned, the load acting on some balls or rollers sharply increases and may even crush them.
- The failure of the cage is caused due to the centrifugal force acting on the balls.
- The complete breakage of the parts of the ball bearing can be avoided by selecting the correct ball bearing, adjusting the alignment between the axes of the shaft and the housing and operating within permissible speeds.

Atmiya University Rajkot

- In general, the failure of antifriction bearing occurs not due to breakage of parts but due to damage of working surfaces of their parts. The principal types of surface wear are as follows:

(i) Abrasive Wear Abrasive wear occurs when the bearing is made to operate in an environment contaminated with dust, foreign particles, rust or spatter. Remedies against this type of wear are provision of oil seals, increasing surface hardness and use of high viscosity oils. The thick lubricating film developed by these oils allows fine particles to pass without scratching.

(ii) Corrosive Wear The corrosion of the surfaces of bearing parts is caused by the entry of water or moisture in the bearing. It is also caused due to corrosive elements present in the Extreme Pressure (EP) additives that are added in the lubricating oils.

Atmiya University Rajkot

- These elements attack the surfaces of the bearing, resulting in fine wear uniformly distributed over the entire surface. Remedies against this type of wear are, providing complete enclosure for the bearing free from external contamination, selecting proper additives and replacing the lubricating oil at regular intervals.

(iii) Pitting Pitting is the main cause of the failure of antifriction bearings. Pitting is a surface fatigue failure which occurs when the load on the bearing part exceeds the surface endurance strength of the material. This type of failure is characterised by pits, which continue to grow resulting in complete destruction of the bearing surfaces. Pitting depends upon the magnitude of Hertz' contact stress and the number of stress cycles. The surface endurance strength can be improved by increasing the surface hardness.

Atmiya University Rajkot

(iv) Scoring Excessive surface pressure, high surface speed and inadequate supply of lubricant result in breakdown of the lubricant film. This results in excessive frictional heat and overheating at the contacting surfaces. Scoring is a stick-slip phenomenon, in which alternate welding and shearing takes place rapidly at high spots. Here, the rate of wear is faster. Scoring can be avoided by selecting the parameters, such as surface speed, surface pressure and the flow of lubricant in such a way that the resulting temperature at the contacting surfaces is within permissible limits.

Atmiya University
Rajkot

LUBRICATION OF ROLLING CONTACT BEARINGS

- The purpose of lubrication in antifriction bearings is to reduce the friction between balls and races.
- The other objectives are dissipation of frictional heat, prevention of corrosion and protection of the bearing from dirt and other foreign particles.
- There are two types of lubricants—oil and grease. Compared with grease, oil offers the following advantages:

(i) It is more effective in carrying frictional heat.

(ii) It feeds more easily into contact areas of the bearing under load.

(iii) It is more effective in flushing out dirt, corrosion and foreign particles from the bearing.

Atmiya University Rajkot

- The advantages offered by grease lubricated bearings are simple housing design, less maintenance cost, better sealing against rust and less possibility of leakage.
- The guidelines for selecting the lubricant are as follows:

(i) When the temperature is less than 100°C, grease is suitable, while lubricating oils are preferred for applications where the temperature exceeds 100°C.

(ii) When the product of bore (in mm) Y speed (in rpm) is below 200 000, grease is suitable. For higher values, lubricating oils are recommended.

(iii) Grease is suitable for low and moderate loads, while lubricating oils are used for heavy duty applications.

(iv) If there is a central lubricating system, which is required for the lubrication of other parts, the same lubricating oil is used for bearings, e.g., gearboxes.

- The choice of lubricating oil is necessary for high speed, heavy load applications, while in the remaining majority of applications, grease offers the simplest and cheapest mode of lubrication.

Aditya University Peddapuram

Design of Bearings

Design of Transmission Systems (DTS)
(21BTMECC404)

Unit - II

Design of Bearings

Prepared By:- Shivang S. Jani
Asst. Professor
Mechanical Engineering Department

BEARINGS

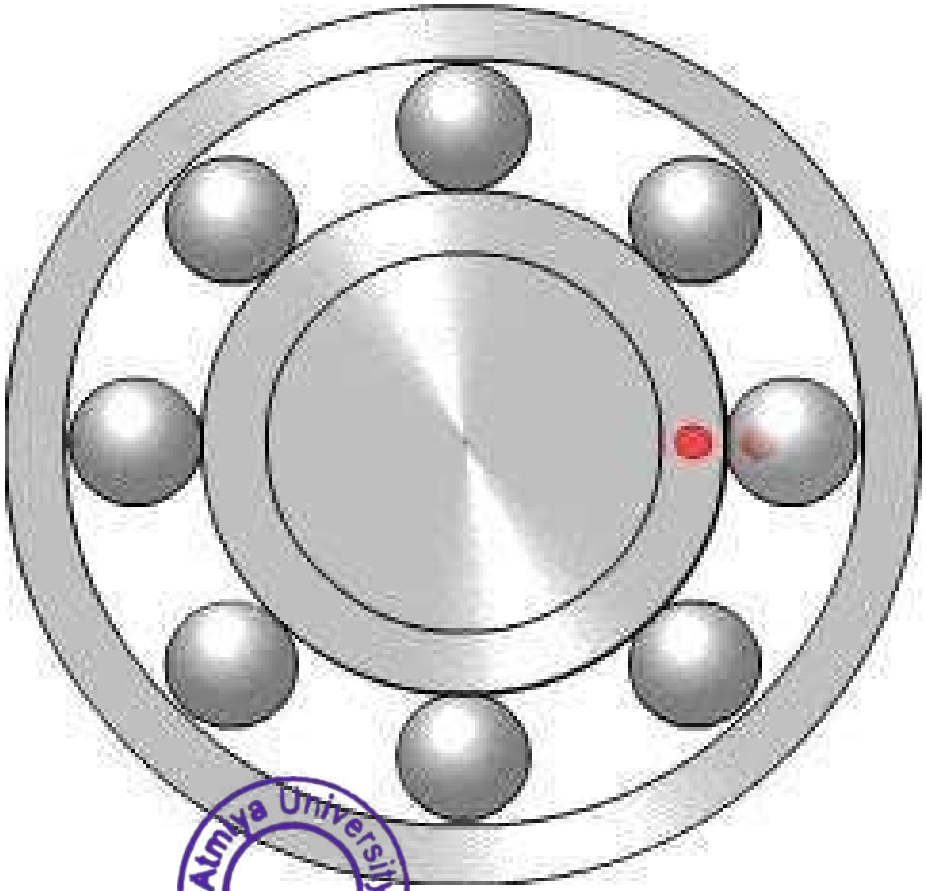

Atmiya University
Rajkot

BEARING DEFINITION & FUNCTION

- A bearing is a mechanical element that permits the relative motion between two parts, such as shaft & the housing, with minimum friction.
- The Function of bearing are as follows:-
- The bearing ensures free rotation of the shaft or the axle with minimum friction.
- The bearing supports the shaft or the axle and holds it in correct position.
- The bearing takes up the forces or the loads that act on the shaft or the axle and transmits them to the frame or the foundation.

Atmiya University Rajkot

CLASSIFICATION OF BEARING BASED ON FORCE ACTS ON THEM

1. Radial Bearings:- A radial bearing supports or take the load in radial direction which is perpendicular to the axis of the shaft.

2. Thrust Bearings(axial bearing):- A thrust bearing supports or take the load in axial direction which acts along to the axis of the shaft.

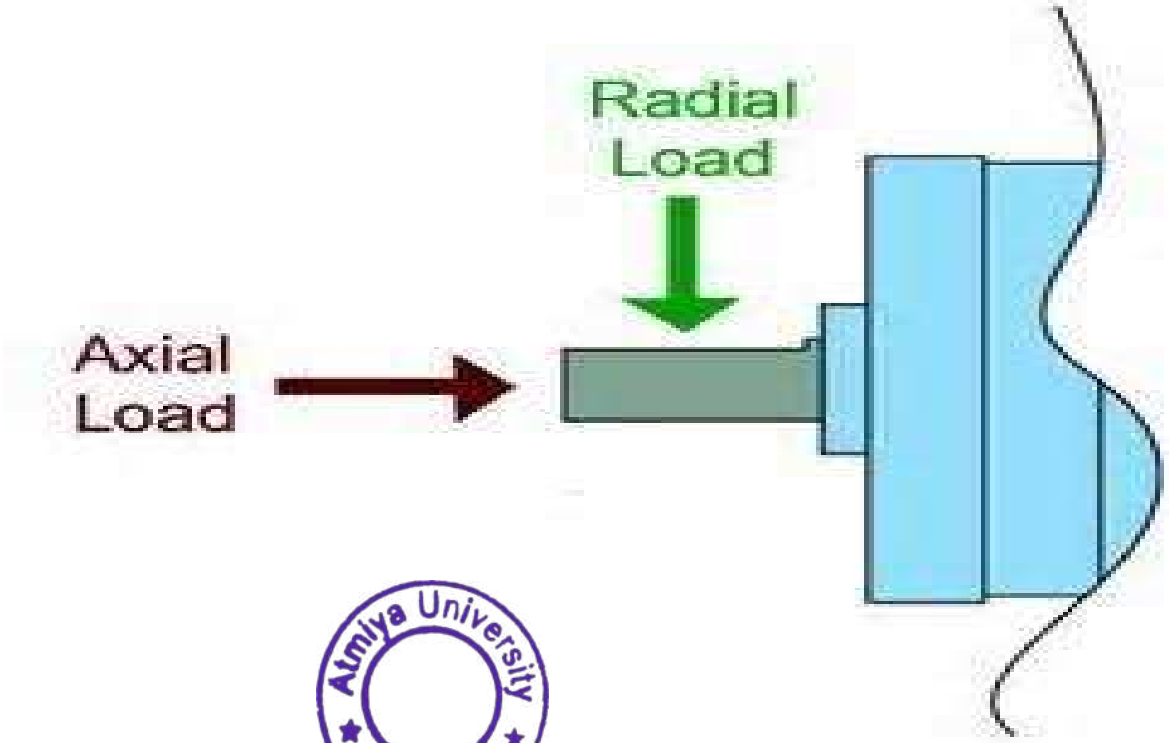

Atmiya University
Rajkot

CLASSIFICATION OF BEARING BASED ON FRICTION BETWEEN THE SHAFT AND BEARING SURFACE.

1. SLIDING CONTACT BEARING OR JOURNAL BEARING OR PLAIN BEARING OR SLEEVE BEARING

- ✓ In sliding contact bearing the shaft slides inside the surface of bearing resulting in friction and wear.
- ✓ In order to reduce the friction and wear these two surfaces are separated by a film of lubricating oil.

2. ROLLING CONTACT BEARING OR ANTI FRICTION BEARING

- ✓ It is also known as Anti Friction bearing or simply a ball bearing.
- ✓ Rolling elements such as balls or rollers are introduced between the surfaces that are in relative motion.

Atmiya University Rajkot

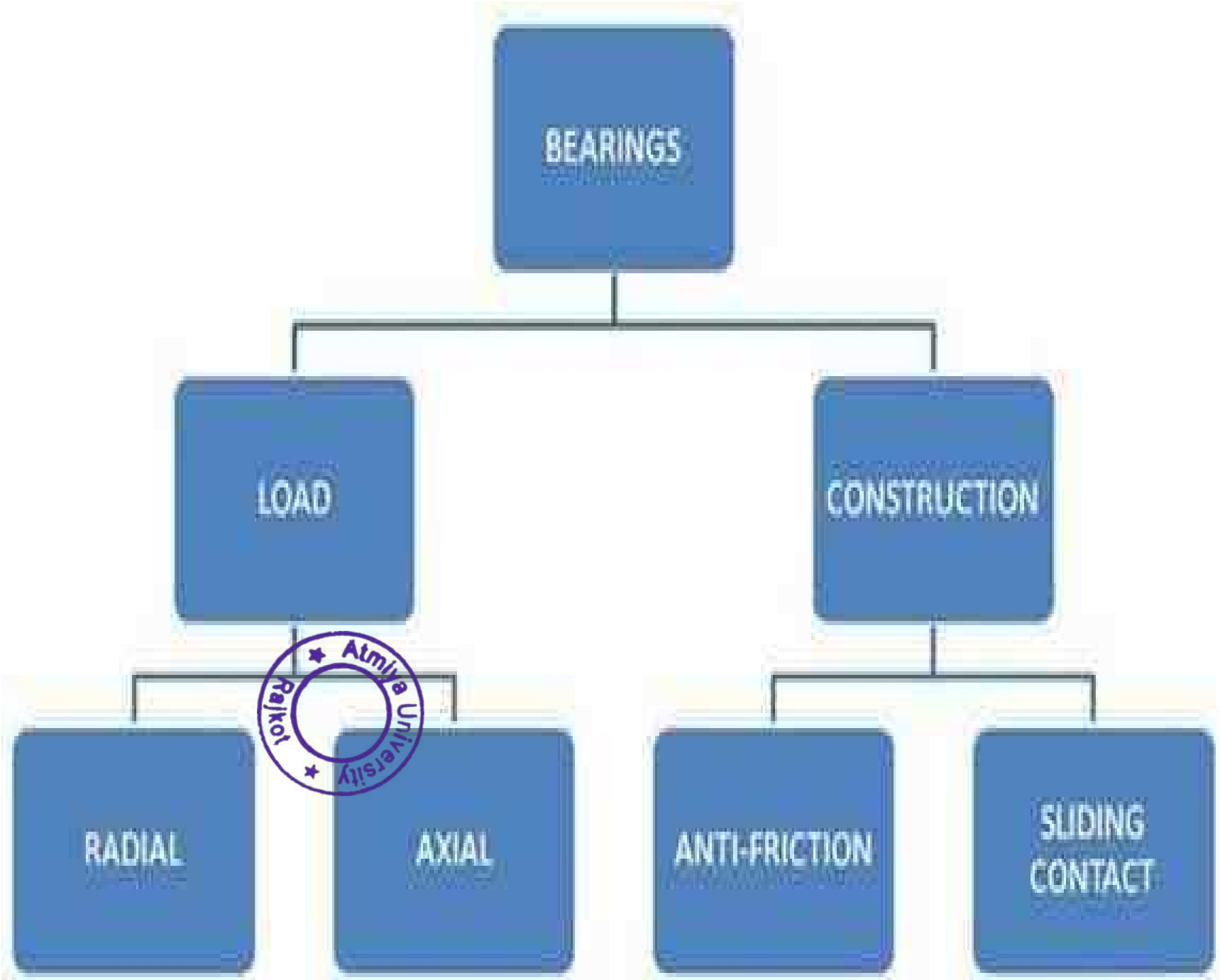

Atmiya University Rajkot

Con't

- Plain bearing is a simple cylinder made to fit around the **journal** or a shaft. Lubricant film separates the bearing surface from the journal.
- Plain bearings are usually made of relatively **soft material** and therefore it does not scratch the shaft.
- Plain bearings are used mainly to support **low speed** shafts carrying **heavy loads**.

Atmiya University Rajkot

- Sliding Contact bearings:- Load is transferred through a thin film of lubricant (oil).
- Rolling Contact bearings:- Load is transferred through rolling elements such as balls, tapered, straight & spherical rollers.

Atmiya University
Rajkot

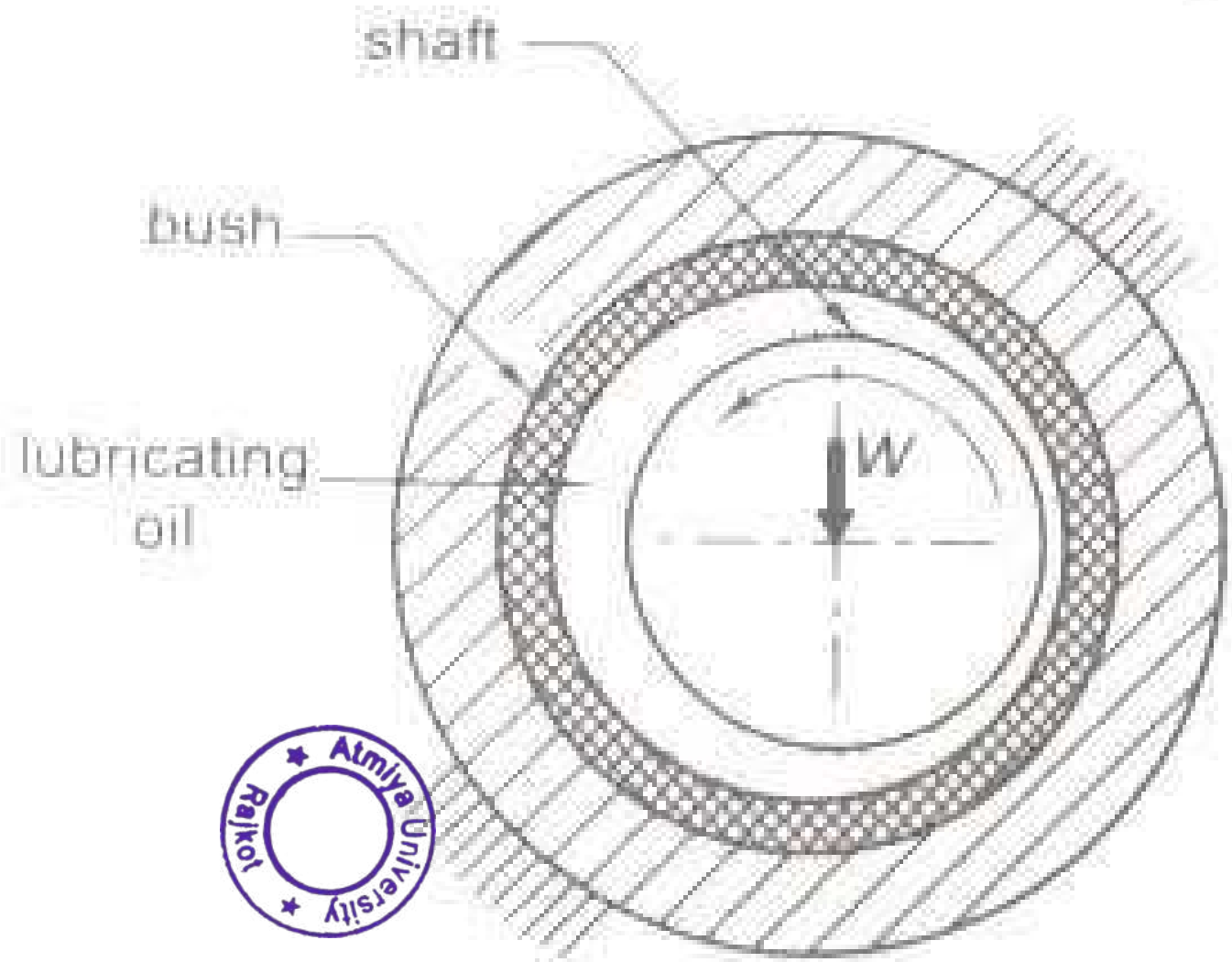

(a) Sliding contact bearing

Atmiya University Rajkot
Atmiya University Rajkot

Sliding contact bearing Construction

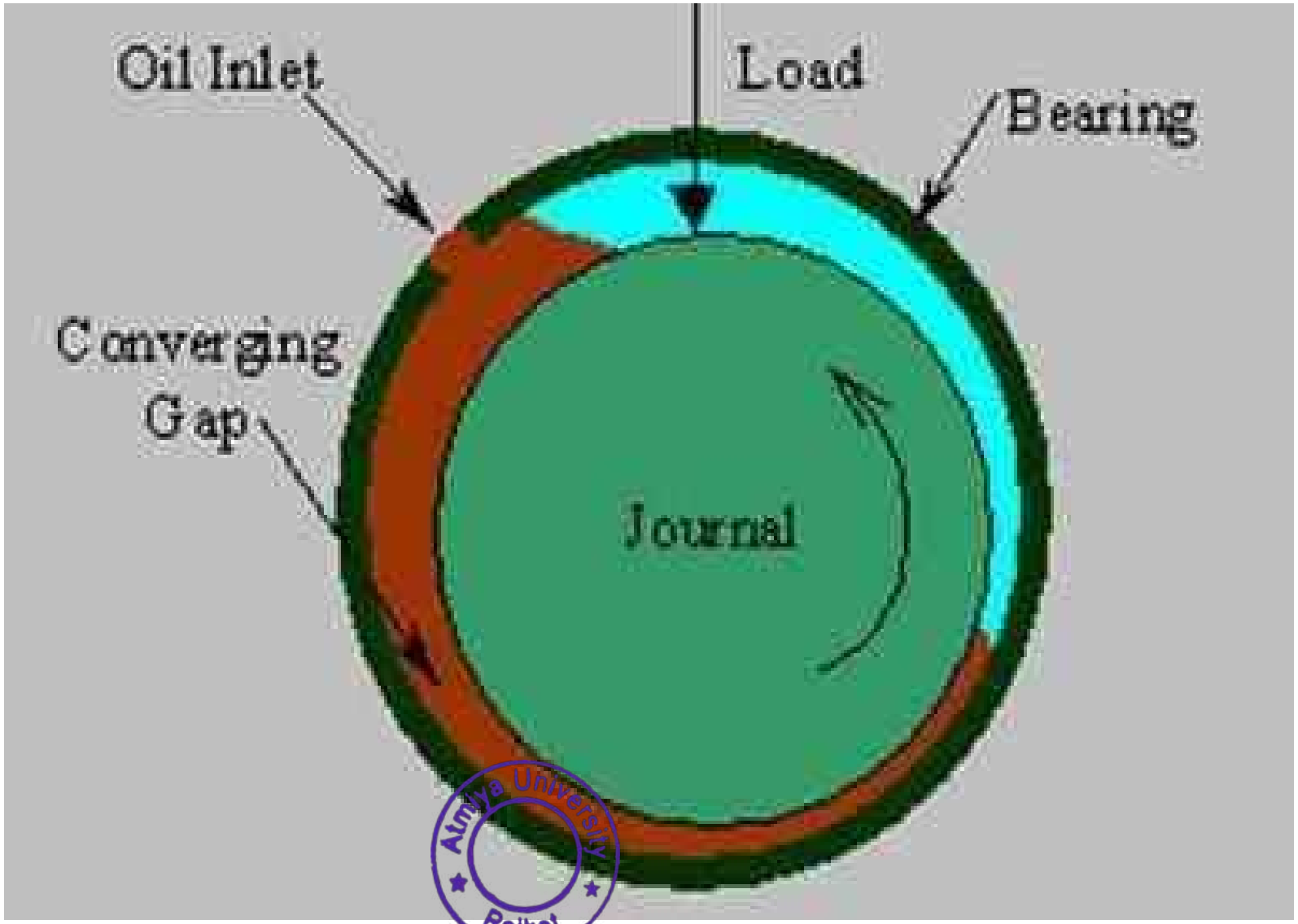

Atmiya University
Rajkot

Rolling Contact Bearing Construction

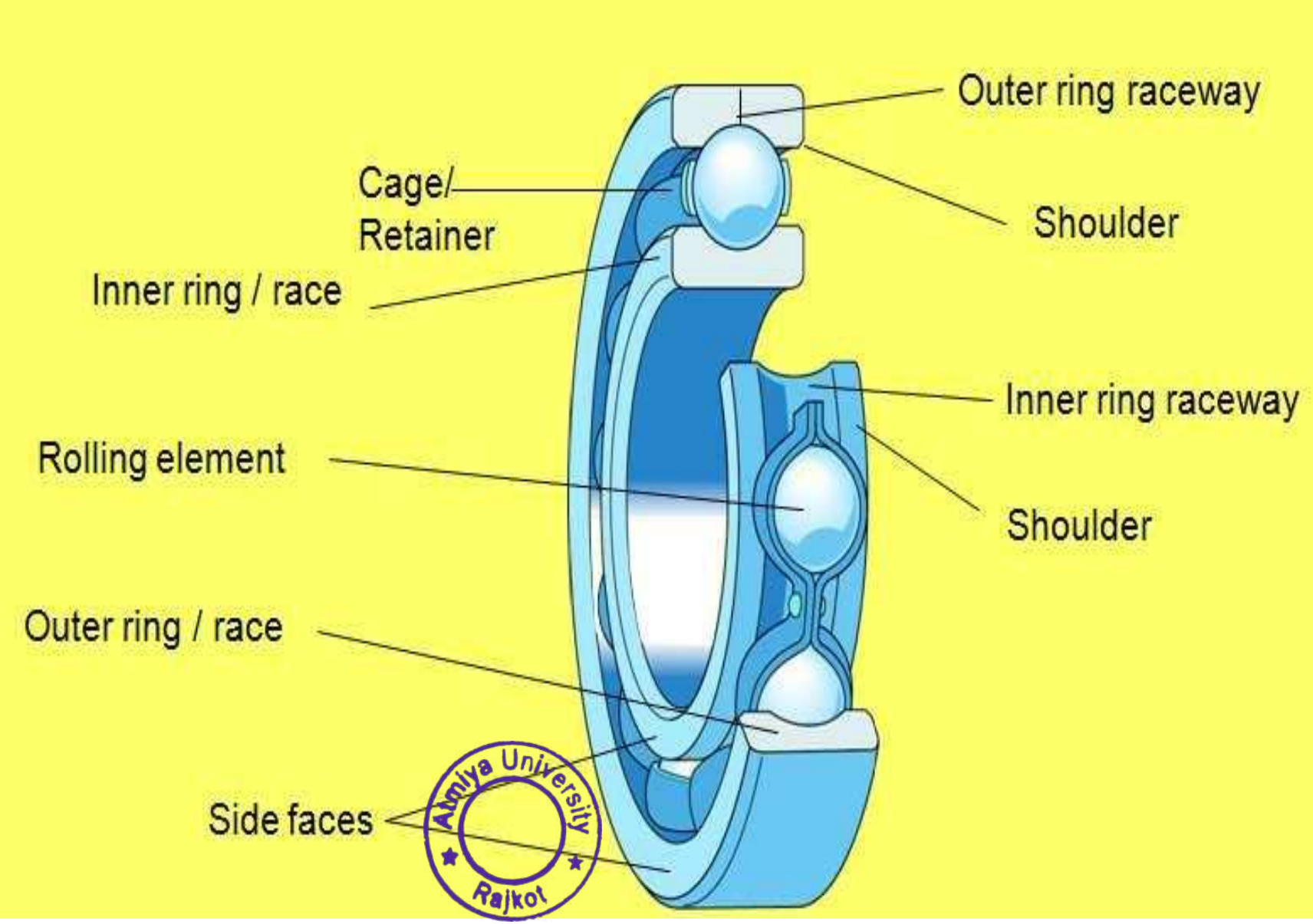

Amiya University Rajkot

- Ball Bearing
  - Incorporates hardened steel balls
  - Steel balls geometrically contact inner and outer race at a point
  - This creates high stresses locally

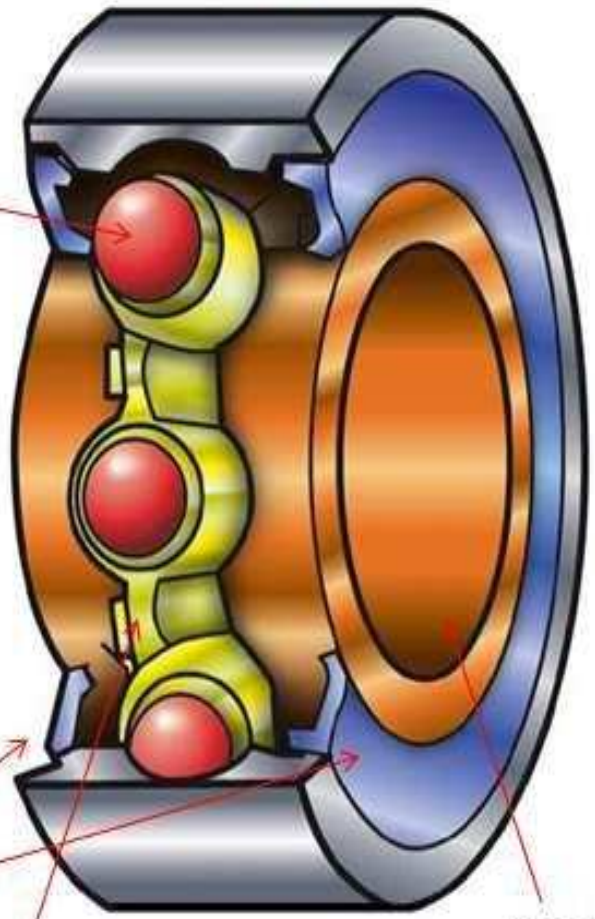

www.duratrax.com

Atmiya University Rajkot
Atmiya University Rajkot

Bearing Diameter

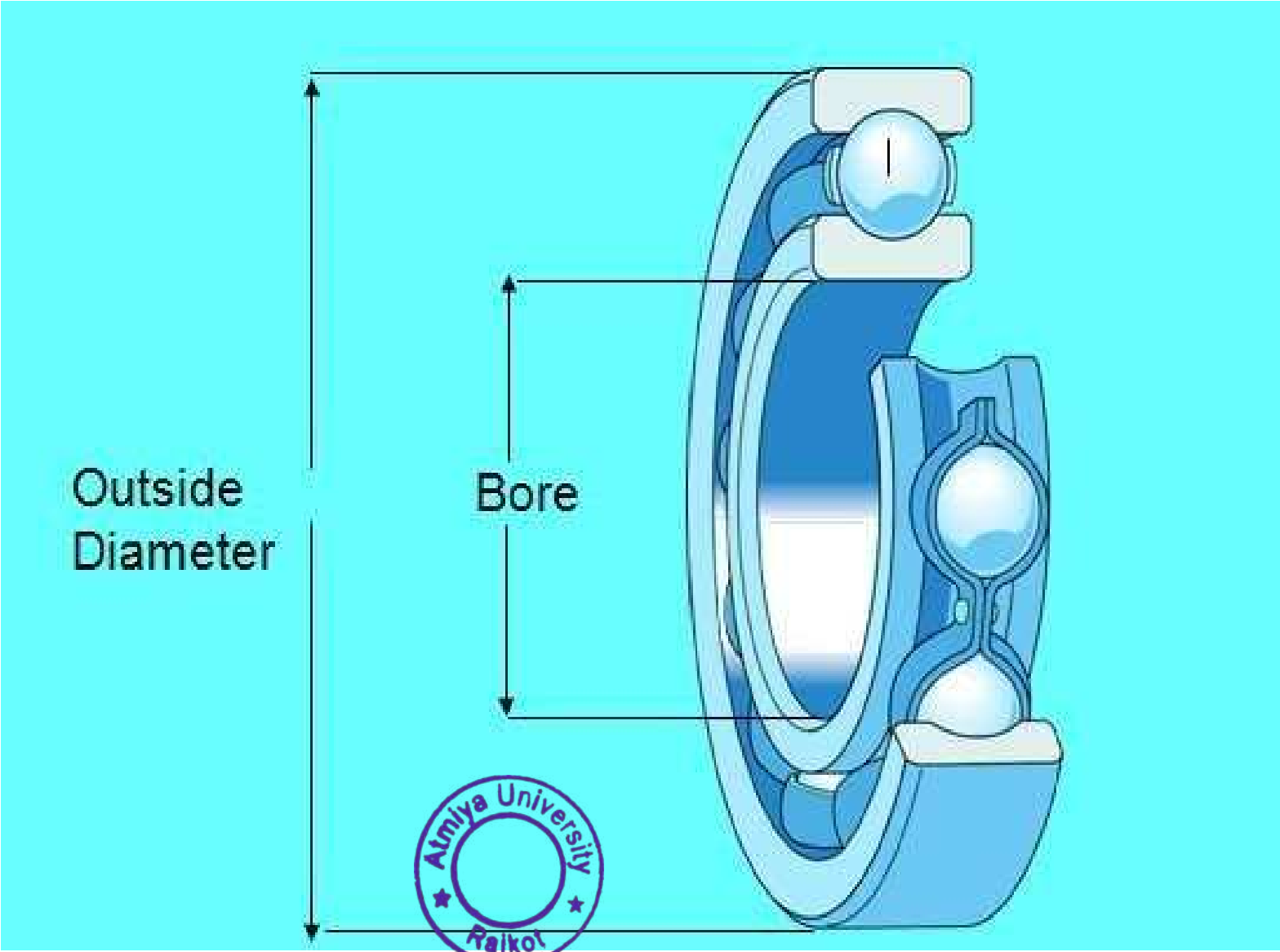

Atmiya University
Rajkot

Exploded View of Rolling Contact Ball Bearing

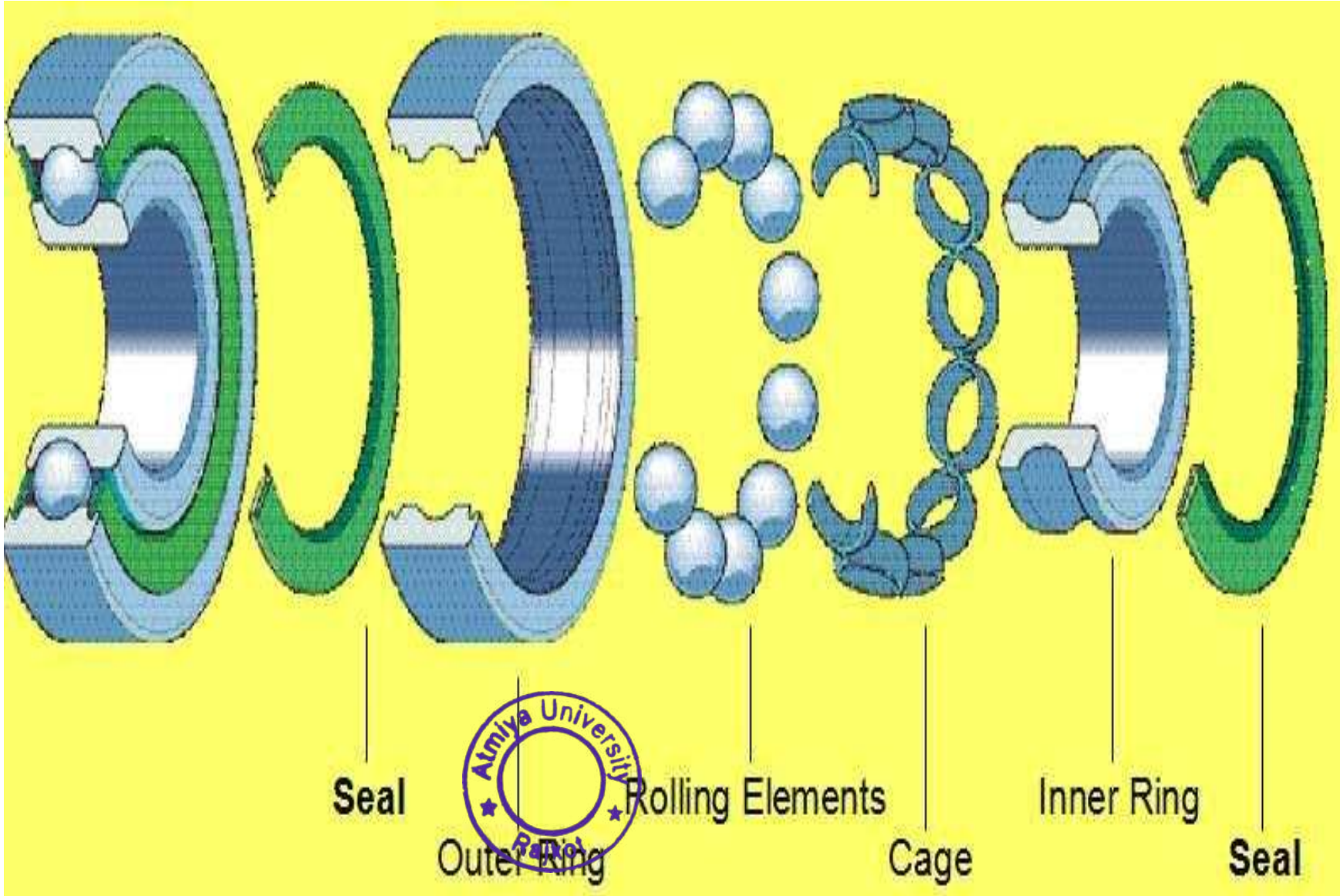

Atmiya University Rajkot

Cylindrical Roller Contact Bearing

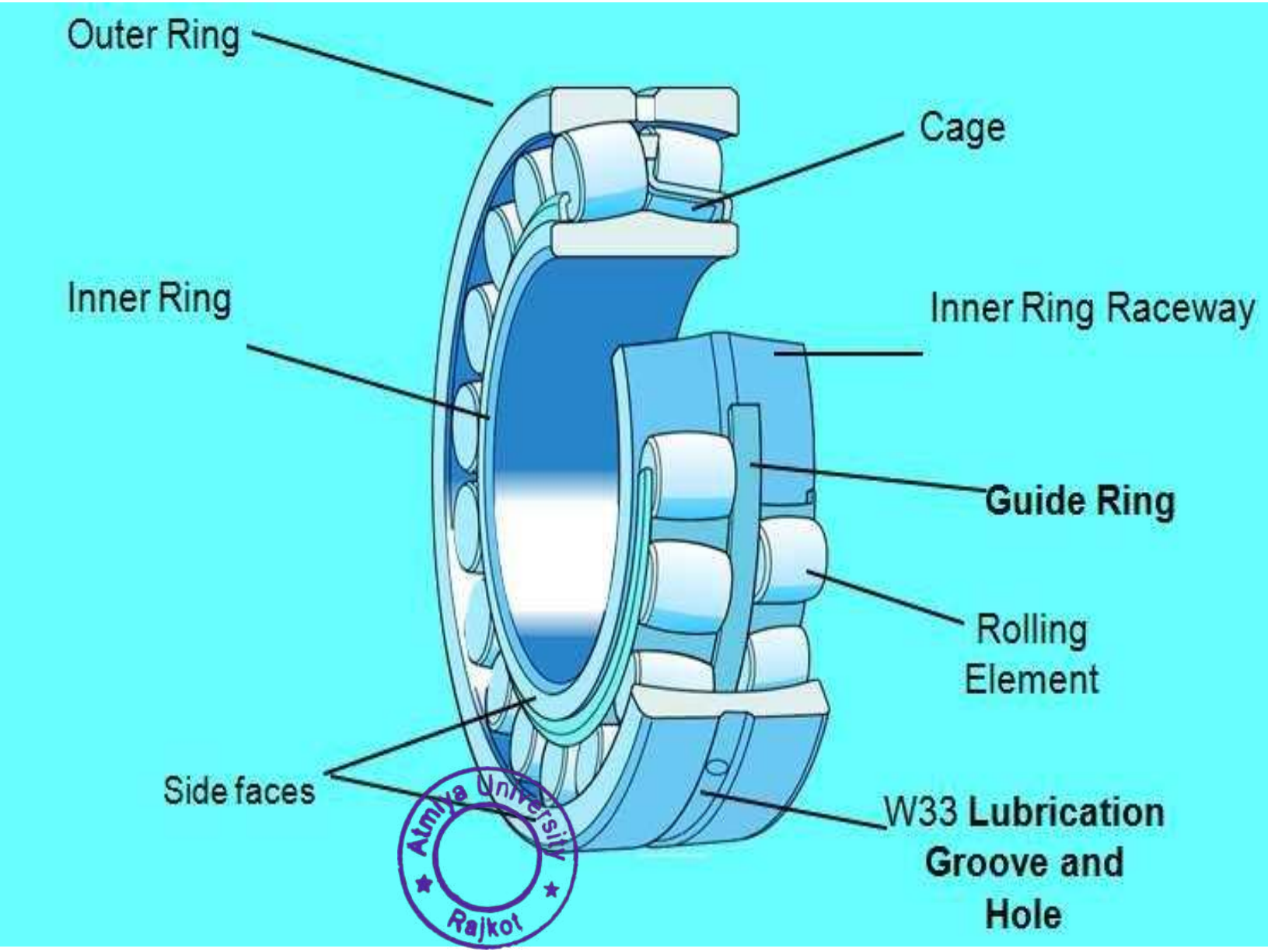

Atmiya University Rajkot

Various Rolling Elements

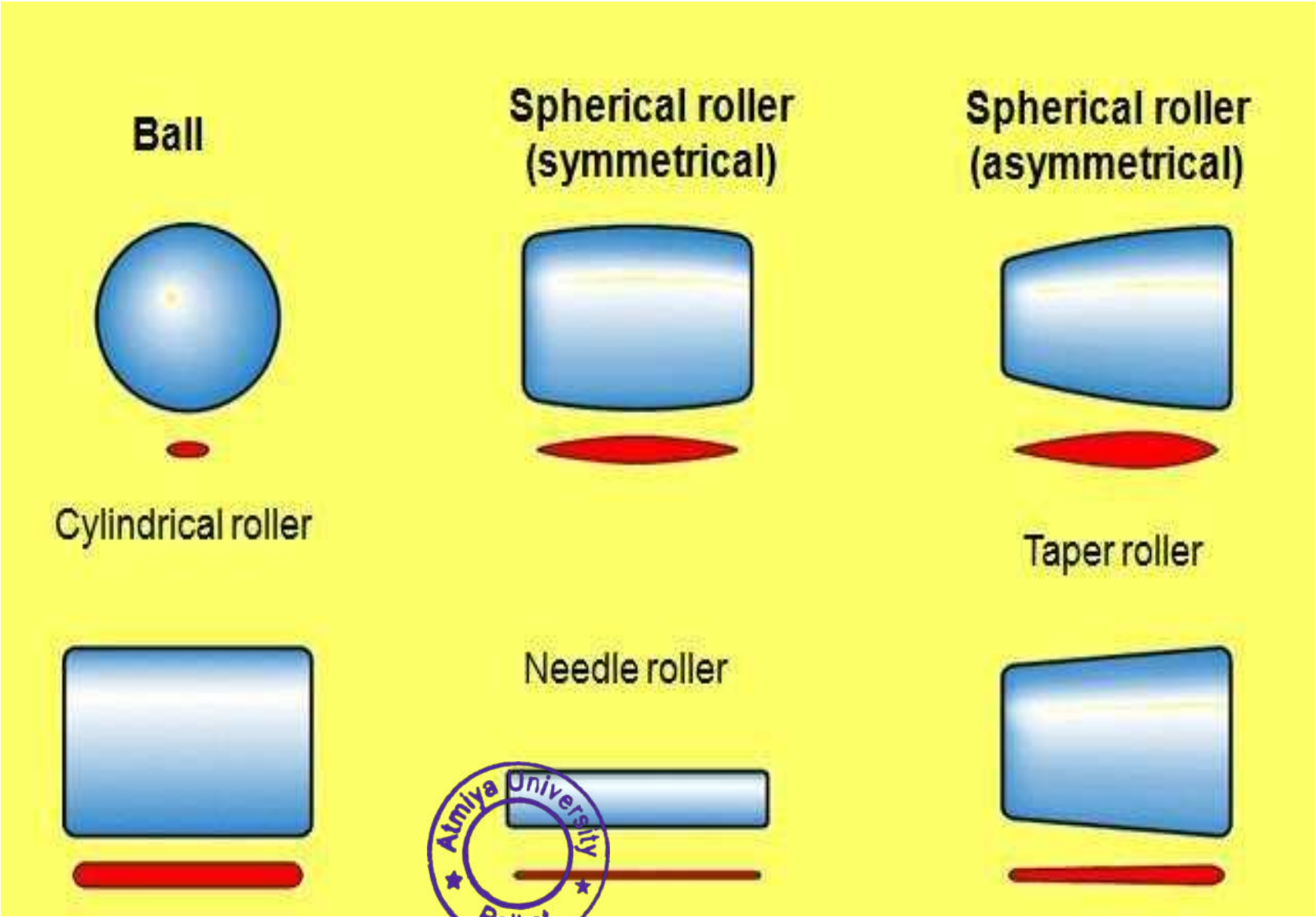

Atmiya University Rajkot

Point & Line Contact in Rolling Contact Bearing

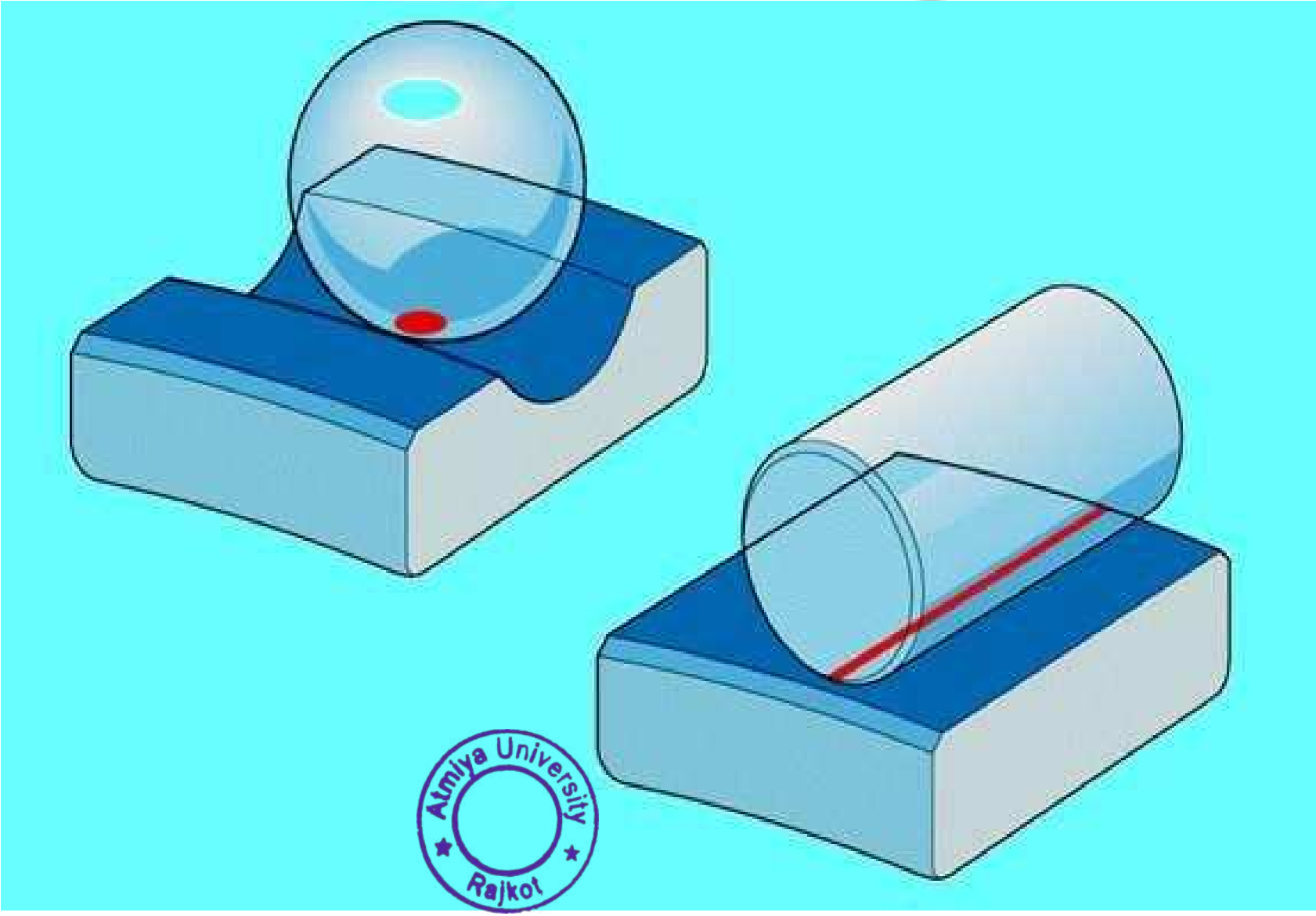

Applications of Sliding Contact Bearing

- **Sliding contact Bearing:-**
  - Crank shaft bearing in Petrol & Diesel engines.
  - Centrifugal Pumps
  - Large Size Electric motors
  - Steam & Gas turbines.
  - Concrete mixer, Rope Conveyor & Marine installations.

Atmiya University Rajkot

Rolling Contact Bearing Applications

- ✓ **Rolling Contact Bearings:-**
- Machine Tool Spindles
- Automobile Front & Rear Axles
- Gear boxes
- Small size electric motors

Atmiya University
Rajkot

Types of Rolling Contact Bearing

- ✓ Deep Groove Ball Bearing
- ✓ Cylindrical Roller Bearing
- ✓ Angular Contact Bearing
- ✓ Self-Aligning Bearing
- ✓ Taper Roller Bearing
- ✓ Thrust Ball Bearing
- ✓ Needle Roller Bearing
- ✓ Spherical Roller Bearing

Atmiya University
Rajkot

Lubrication

- **Lubrication**:- It is the science of reducing friction by application of a suitable substance called lubricant, between the rubbing surfaces of bodies having relative motion.
- **Classification of Lubricants:-**

1. Liquid Lubricants (e.g – Mineral oils or vegetable oils)
2. Semi-Solid Lubricants (e.g- grease)
3. Solid Lubricants (e.g- graphite & molybdenum disulphide)
4. Gaseous Lubricants

- **Objectives of Lubrication:-**

1) To reduce friction
2) To reduce or prevent wear
3) To carry away heat generated due to friction
4) To protect the journal and the bearing from corrosion

Atmiya University Rajkot

LUBRICANT PROPERTIES

- It should give rise to low friction.
- It should adhere to the surface and reduce the wear.
- It should protect the system from corrosion.
- It should have good cleaning effect on the surface.
- It should carry away as much heat from the surface as possible.
- It should have oxidative stability.
- It should have good thermal conductivity.
- It should be compatible with seal materials.
- It should be cheap and available in plenty.

Atmiya University
Rajkot

LUBRICANT FOR JOURNAL BEARING APPLICATION

- **Recommended Lubricants for the Bearing Application :-**

1. SAE 10 – spindle oil for light loaded bearings and high speeds.
2. SAE 20 – 40 – Machine oil for bearings of IC engines, machine tools, turbines etc.
3. SAE40-50 – Machine oil for diesel engines heavy load and medium speeds.
4. SAE 60-70 – machine oil for high temperature, heavy load and low speeds.

Atmiya University Rajkot

Modes of lubrication

1. Thick Film Lubrication
2. Thin Film Lubrication
3. Elastohydrodynamic lubrication
4. Solid film lubrication

- Thick Film Lubrication:- It describes the condition of lubrication, where the two surfaces of the bearing in relative motion are completely separated by a fluid film.
- Viscosity of lubricant affects the performance of bearing.

Atmiya University Rajkot

- ✓ Thick Film lubrication are further classified into two groups:-
- ✓ 1. Hydrodynamic lubrication
- ✓ 2. Hydrostatic lubrication
- ➢ Hydrodynamic lubrication:- It is defined as the system of lubrication in which the load supporting fluid film is created by the shape and relative motion of the sliding surfaces.
- ➢ Principle of hydrodynamic bearing:-
- ✓ Initially the shaft is at rest as shown in fig.(a) under the action of load W.
- ✓ As the journal start to rotate, it will climb the bearing surface as shown in fig. (b)
- ✓ As the speed is increasing it will force the fluid into the wedge shaped region as shown in fig. (c)

Atmiya University Rajkot

- Since more and more fluid is forced in to wedge shaped clearance space, pressure is generated within the system.
- The pressure distribution around the periphery of the journal bearing is shown in fig.
- Since the pressure is created within the system due to rotation of shaft, this type of bearing is also known as self-acting bearing.
- The pressure generated in the clearance space supports the external load W.
- This mode of lubrication is seen in the bearing mounted on engines & centrifugal pumps.
- A journal bearing is a sliding contact bearing working on hydrodynamic lubrication and which supports the load in any radial direction.

Atmiya University Rajkot

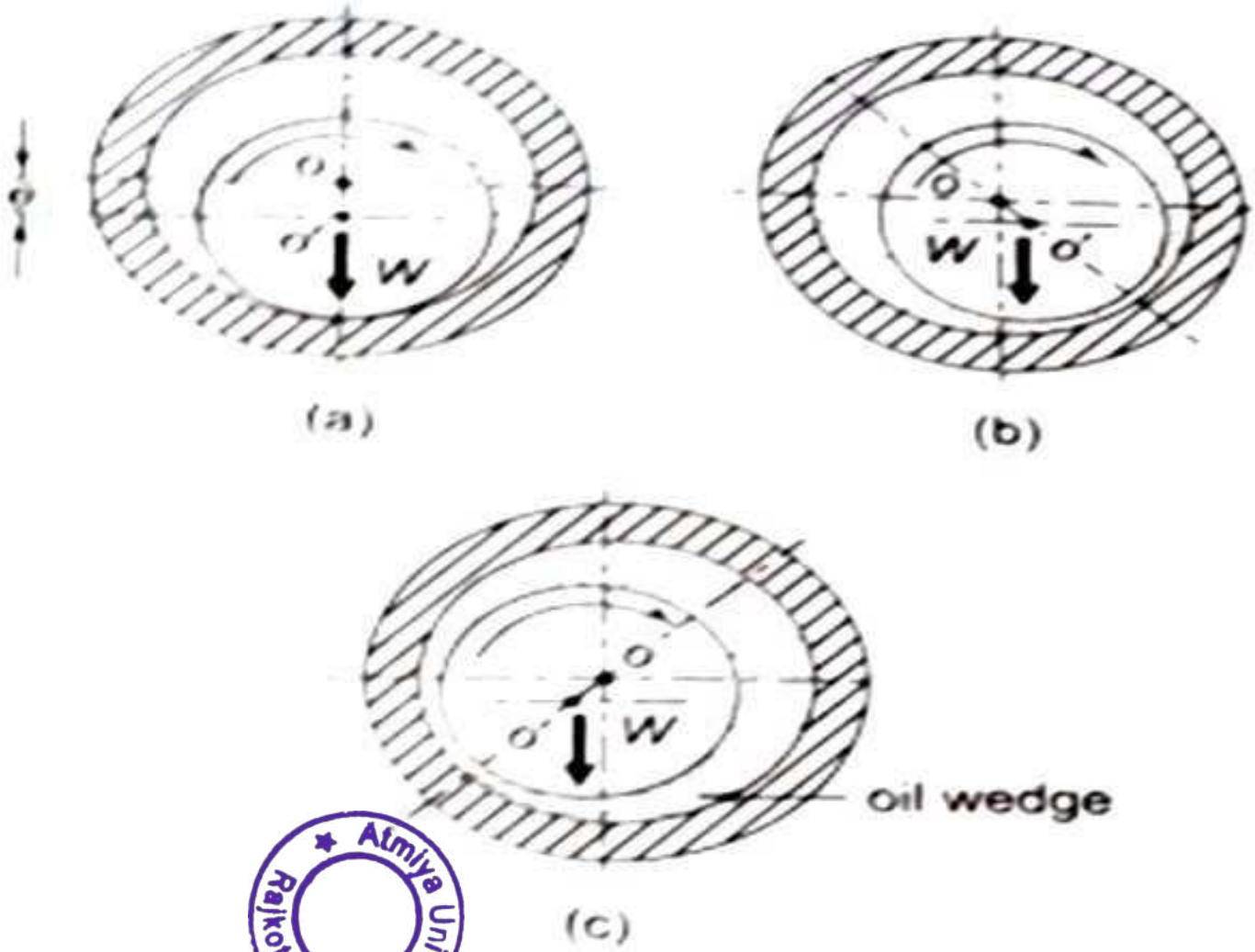

Atmiya University Rajkot

Atmiya University Rajkot

Hydrodynamic Lubrication
(a) Journal at Rest
(b) Journal starts to Rotate
(c) Journal at Full speed

Pressure distribution

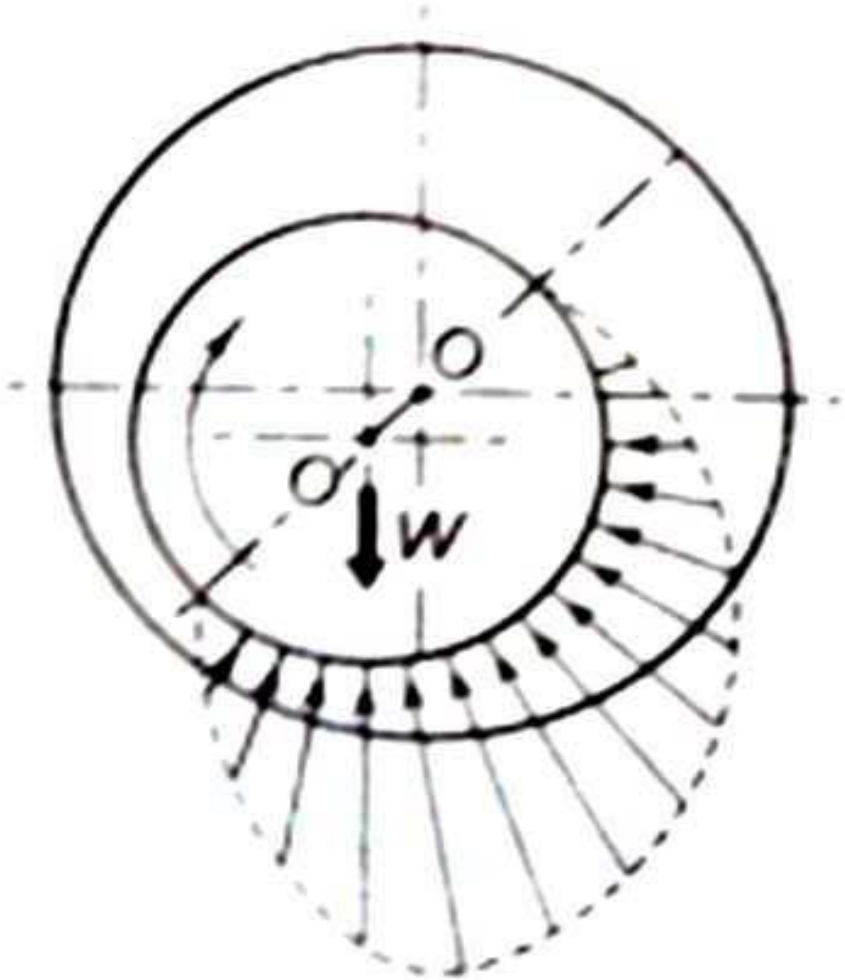

Pressure Distribution in Hydrodynamic Bearing

Atmiya University Rajkot

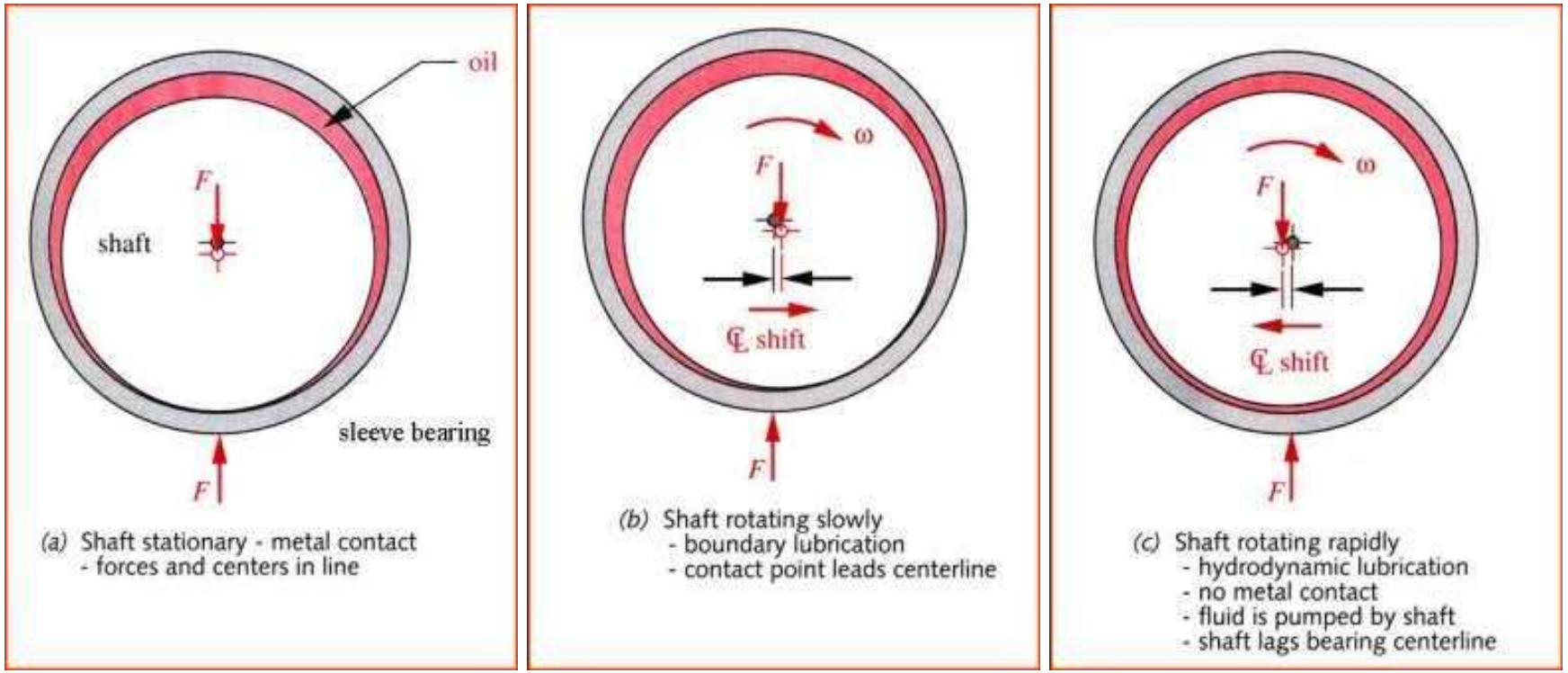

Atmiya University Rajkot

Atmiya University Rajkot

Classification of Hydrodynamic bearing

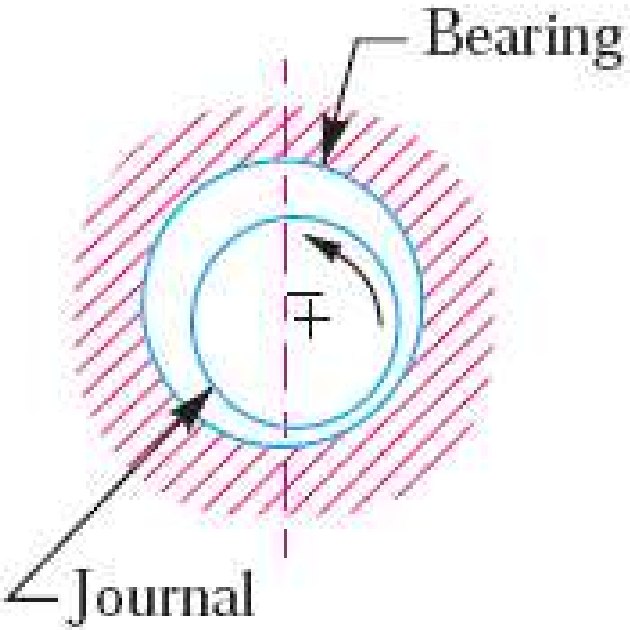

(*a*) Full journal bearing.

The sliding contact bearings in which the sliding action is along the circumference of a circle or an arc of a circle and carrying radial loads are known as ***journal or sleeve bearings. When the angle*** of contact of the bearing with the journal is 360° as shown in Fig. (*a*), *then the bearing is called* a ***full journal bearing. This type of bearing is commonly used in industrial machinery to accommodate*** bearing loads in any radial direction.

Atmiya University Rajkot

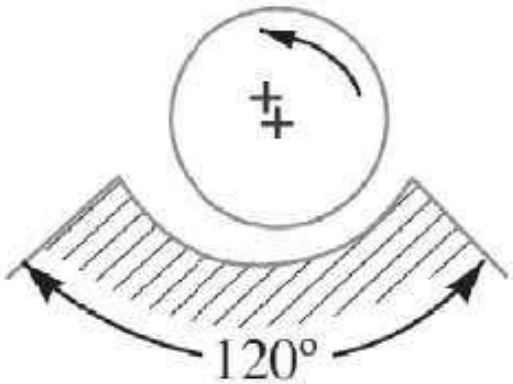

(*b*) Partial journal bearing.

When the angle of contact of the bearing with the journal is 120°, as shown in Fig. (*b*), *then* the bearing is said to be ***partial journal bearing.*** This type of bearing has less friction than full journal bearing, but it can be used only where the load is always in one direction.

The most common application of the partial journal bearings is found in rail road car axles.

The full and partial journal bearings may be called as ***clearance bearings because the diameter of the journal is less than that of*** bearing.

Atmiya University Rajkot

Atmiya University Rajkot

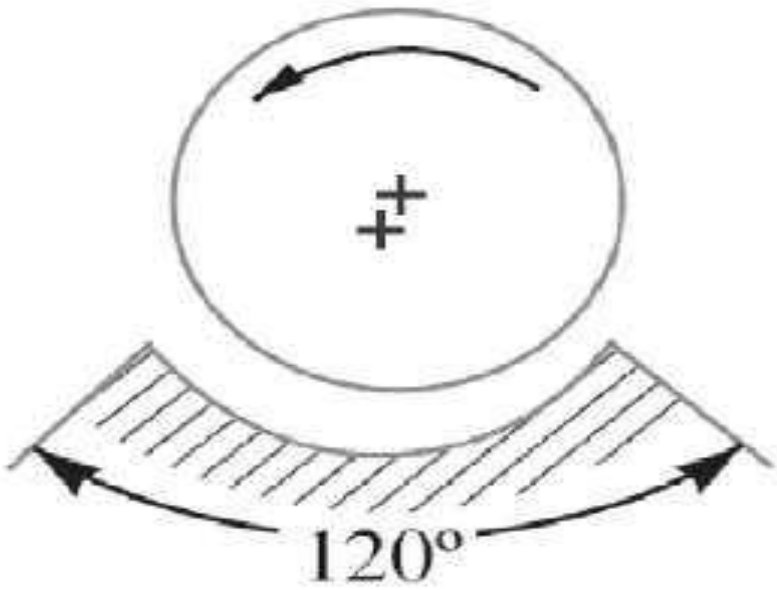

(*c*) Fitted journal bearing.

When a partial journal bearing has no clearance *i.e. the diameters of the journal and bearing are* equal, then the bearing is called a ***fitted bearing, as shown in Fig. (c)***

Atmiya University Rajkot

The sliding contact bearings, according to the thickness of layer of the lubricant between the bearing and the journal, may also be classified as follows :

1. ***Thick film bearings.*** The thick film bearings are those in which the working surfaces are completely separated from each other by the lubricant. Such type of bearings are also called as ***hydrodynamic lubricated bearings.***

2. ***Thin film bearings.*** The thin film bearings are those in which, although lubricant is present, the working surfaces partially contact each other atleast part of the time. Such type of bearings are also called ***boundary lubricated bearings.***

3. ***Zero film bearings.*** The zero film bearings are those which operate without any lubricant present.

4. ***Hydrostatic or externally pressurized lubricated bearings.*** The hydrostatic bearings are those which can support steady loads without any relative motion between the journal and the bearing. This is achieved by forcing externally pressurized lubricant between the members.

Atmiya University Rajkot

Hydrostatic lubrication

- It is defined as a system of lubrication in which the load supporting fluid film separating the two surfaces is created by an external source, like pump, supplying sufficient fluid under pressure.
- Since the lubricant is supplied under pressure, this type of bearing is called externally pressurized bearing.
- Principle of hydrostatic lubrication in journal bearing:-

✓ Initially the shaft rests on the bearing surface as shown in fig.(a).

✓ As the pump starts, high pressure fluid is admitted in the clearance space, forcing the surfaces of bearing and journal to separate out as shown in fig.(b).

Atmiya University Rajkot

Hydrostatic Lubrication

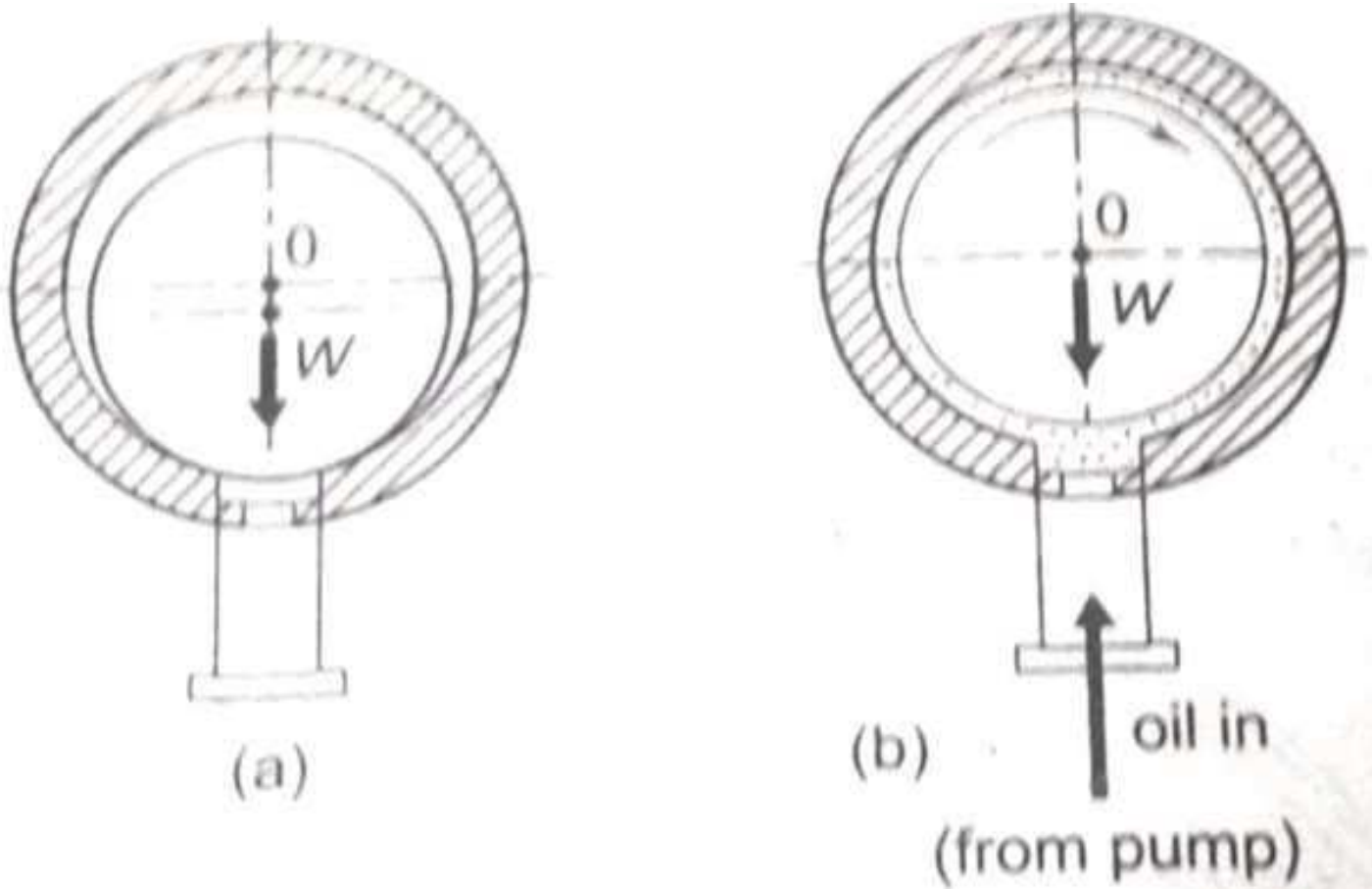

Hydrostatic Lubrication
(a) Journal at Rest
(b) Journal at Full Speed

Atmiya University
Rajkot

- ✓ Hydrostatic bearings are used on vertical turbo generators etc..
- ✓ Disadvantages:-

1) Complex construction
2) Higher initial and maintenance cost.

- ✓ Advantages:-

1) High load carrying capacity even at low speeds.
2) No starting friction
3) No rubbing action at any operating speed or load.

Atmiya University Rajkot

Thin Film Lubrication

- Also known as boundary lubrication
- It is defined as the condition of lubrication, where the lubricant film is relatively thin and there is partial metal to metal contact.
- This mode of lubrication is seen in door hinges and machine tool slides.
- The condition resulting boundary lubrication are excessive load, insufficient surface area or oil supply, low speed and misalignment.

Atmiya University
Rajkot

Thick & Thin Film Lubrication

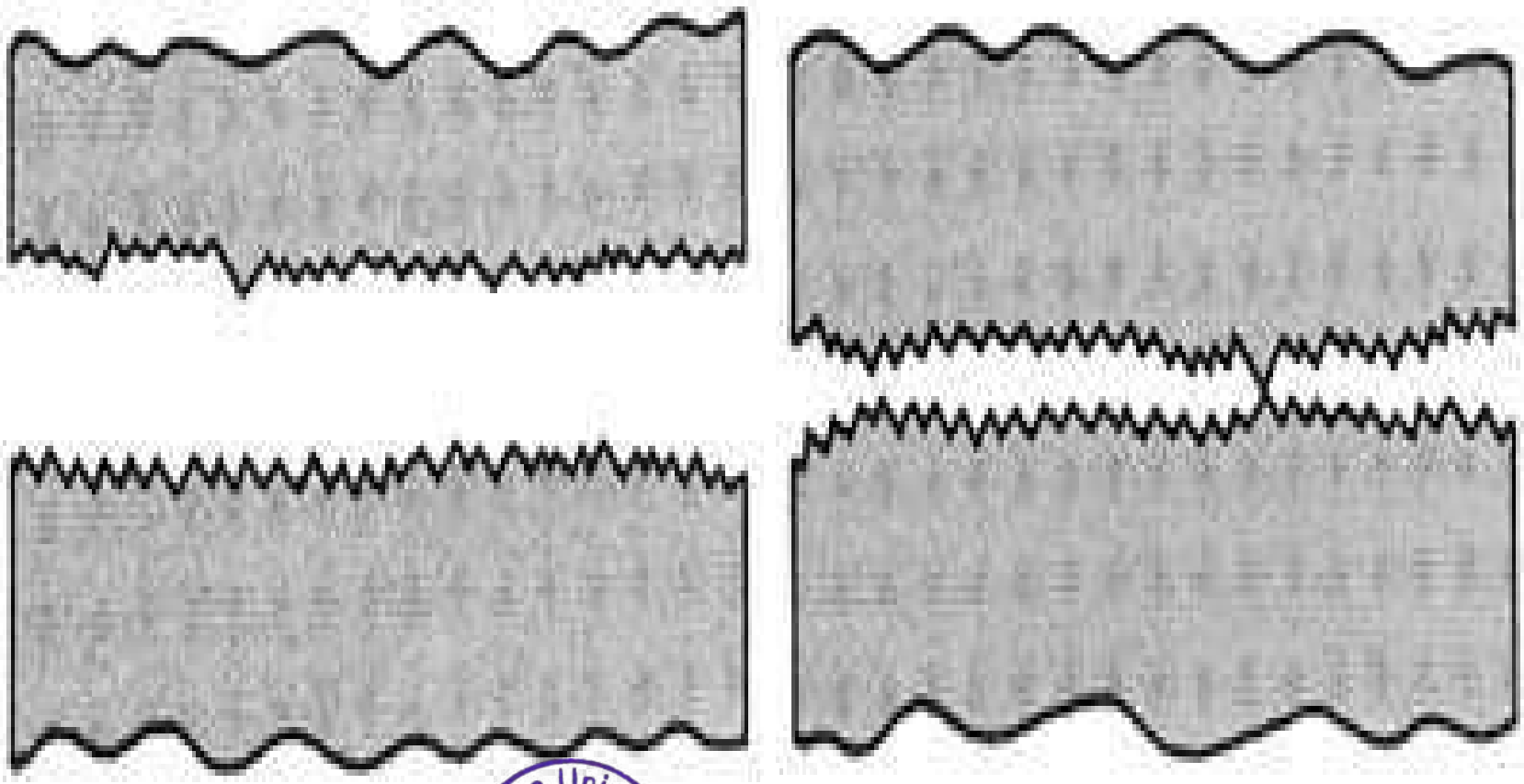

Atmiya University
Rajkot

Elastohydrodynamic Lubrication

- Rolling contact bearings come under this category. The oil film thickness is very small.
- The contact pressures are going to be very high. Hence to prevent the metal-to-metal contact, surface finishes are to be of high quality.
- Such a type of lubrication can be seen in gears, rolling contact bearings, cams etc.
- Since hydrodynamic film is developed due to elastic deflection of parts, this mode of lubrication is called elastohydrodynamic lubrication.

Atmiya University
Rajkot

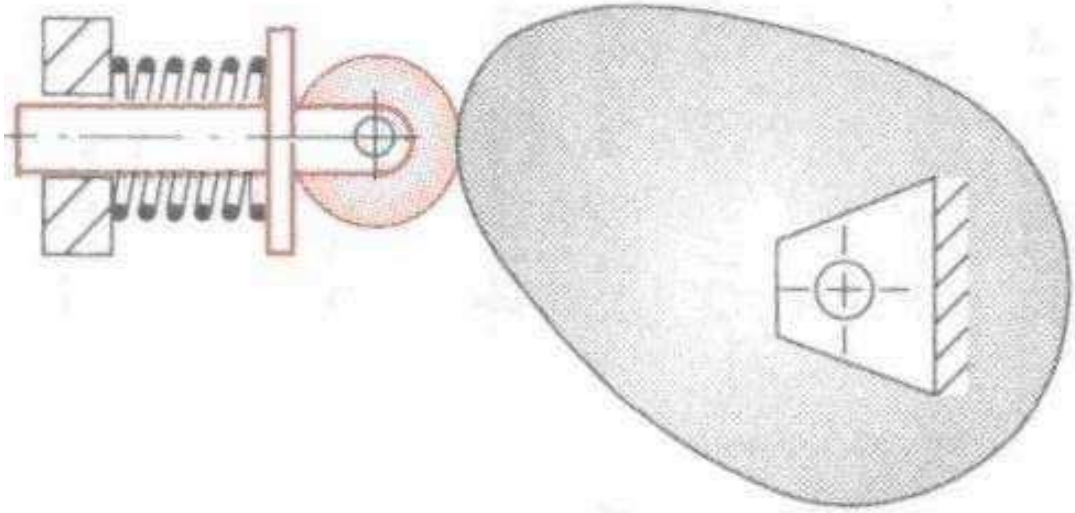

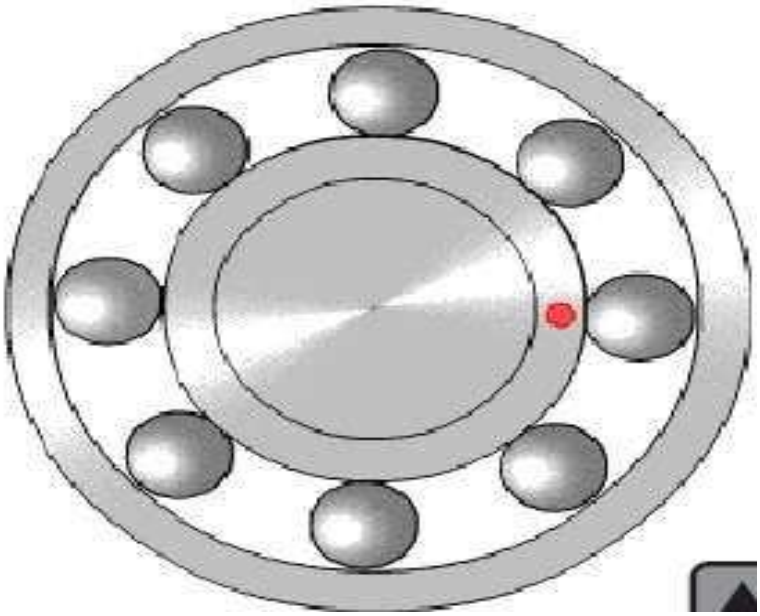

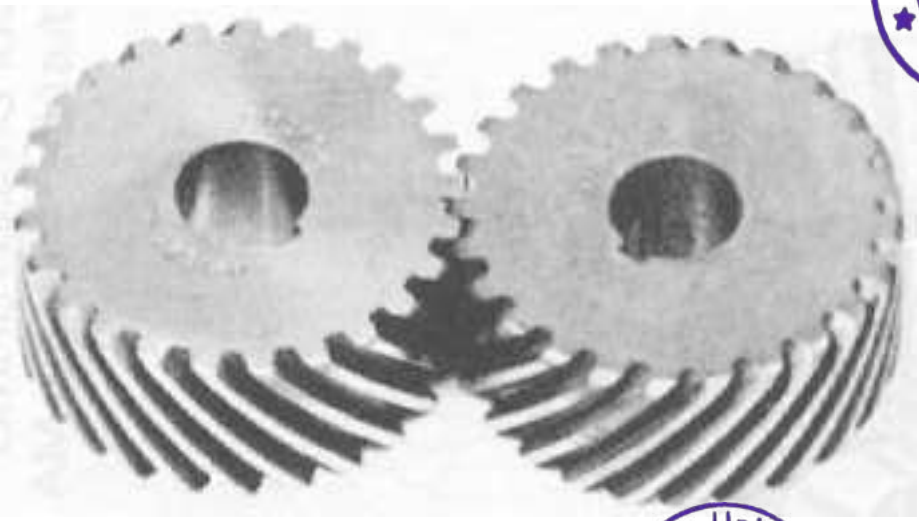

Atmiya University Rajkot

Atmiya University Rajkot

Solid film Lubrication

- For extreme temperature operations ordinary mineral oils are not satisfactory.
- Solid film lubricants such as graphite, molybdenum disulfide or their combinations which withstand high operating temperature are used.
- These types of bearings are common in furnace applications, hot drawing mills etc.

Atmiya University Rajkot

VISCOSITY

- Viscosity is defined as the internal frictional resistance offered by a fluid to change its shape or relative motion of its parts.
- An oil film placed between two parallel plates is shown in Fig.

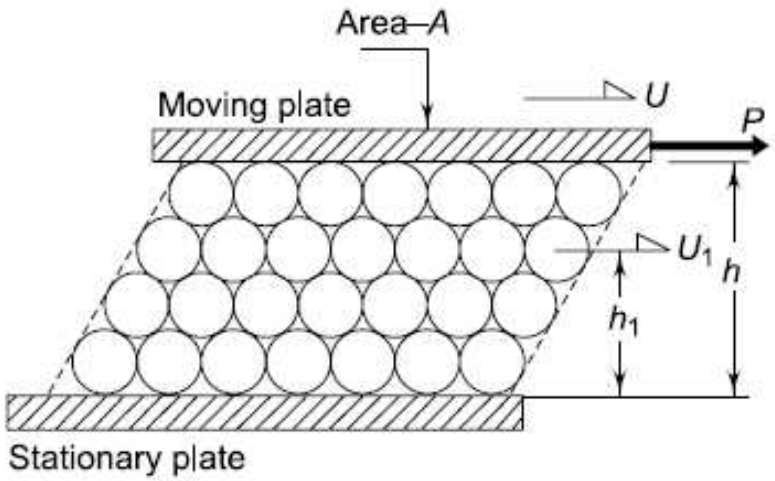

- The lower plate is stationary while the upper plate is moved with a velocity U by means of a force P.
- The molecules of oil are visualised as small balls, which roll in layers between two plates.
- The oil will stick to both the surfaces, and therefore the layer of molecules in contact with the stationary plate has zero velocity.
- Similarly, the layer of molecules in contact with the upper plate will move with a velocity *U*.

Atmiya University Rajkot

- The intermediate layers will move with velocities which are proportional to their distance from the stationary plate. Therefore,

$$\frac{U}{h} = \frac{U_1}{h_1} = \frac{U_2}{h_2}$$

- This type of orderly movement is called *streamline, laminar or viscous flow*. The tangential force per unit area, i.e., (P/A), is shear stress, while the ratio (U/h) is the rate of shear.
- According to Newton's law of viscosity, the shear stress is proportional to the rate of shear at any point in the fluid. Therefore,

$$\left(\frac{P}{A}\right) \propto \left(\frac{U}{h}\right)$$

or

$$P = \mu A\left(\frac{U}{h}\right)$$

- When the velocity distribution is non-linear with respect to *h, the term (U/h) in the above equation is* replaced by (*dU/dh) and the equation is rewritten as,*

$$\mu = \frac{Ph}{AU} = \frac{(\mathrm{N})(\mathrm{mm})}{(\mathrm{mm}^2)(\mathrm{mm/s})}$$

$$= \mathrm{N\text{-}s/mm^2} \quad \text{or} \quad \mathrm{MPa\text{-}s}$$

Atmiya University Rajkot

- The popular unit of viscosity is the *Poise, which* gives absolute viscosity in dyne-s/cm^2.
- Poise is a large unit and viscosities of most of the lubricating oils are given in terms of centi-Poise (cP), which is one-hundredth of a Poise.
- Therefore, following two separate notations are used for viscosity:
- m = viscosity in units of (N-s/mm^2) or (MPa-s)
- z = viscosity in units of (cP)
- The relationship between z and m is as follows:

$$1\,\text{cP} = \frac{1}{10^2}\,\text{Poise}$$

$$= \frac{1}{10^2}\,\frac{\text{dyne-s}}{\text{cm}^2}$$

$$= \frac{1}{10^2} \times \left(\frac{\text{N}}{10^5}\right)\left[\frac{\text{s}}{10^2\,\text{mm}^2}\right]$$

$$= (10^{-9})\ \text{N-s/mm}^2$$

$$\therefore \quad 1\ \text{N-s/mm}^2 = 1\ \text{MPa s} = (10^9)\ \text{cP}$$

Therefore,

$$\mu = \frac{z}{10^9}$$

Atmiya University Rajkot

PETROFF'S EQUATION

- Petroff's equation is used to determine the coefficient of friction in journal bearings. It is based on the following assumptions:

(i) The shaft is concentric with the bearing.

(ii) The bearing is subjected to light load.

- In practice, such conditions do not exist.
- However, Petroff's equation is important because it defines the group of dimensionless parameters that govern the frictional properties of the bearing.
- Vertical shaft rotating in the bearing is shown in Fig. 16.10(a).

r = radius of the journal (mm)

l = length of the bearing (mm)

c = radial clearance (mm)

n_s = journal speed (rev/sec)

- The velocity at the surface of the journal is given by,

$$U = (2\pi r)\, n_s$$

Atmiya University Rajkot

- According to Newton's law of viscosity and using Eq.,

$$P = \mu A\left(\frac{U}{h}\right)$$

- We will apply the above equation for viscous flow through the annular portion between the journal and the bearing in the circumferential direction.

P = tangential frictional force
A = area of journal surface = $(2\pi r)l$
U = surface velocity = $(2\pi r)n_s$
h = distance between journal and bearing surfaces = c

Substituting above values in Eq. (b),

$$P = \mu(2\pi rl)(2\pi rn_s)\left(\frac{1}{c}\right) = \frac{4\pi^2 r^2 l\mu n_s}{c}$$

The frictional torque is given by,

$$(M_t)_f = Pr = \frac{4\pi^2 r^3 l\mu n_s}{c}$$

Atmiya University Rajkot

- Let us consider a radial force (*W), acting on the* bearing as shown in Fig. 16.10(b). The unit bearing pressure (*p) acting on the bearing is given by,*

$$p = \frac{W}{\text{projected area of bearing}} = \frac{W}{(2rl)}$$

$$W = 2\,prl$$

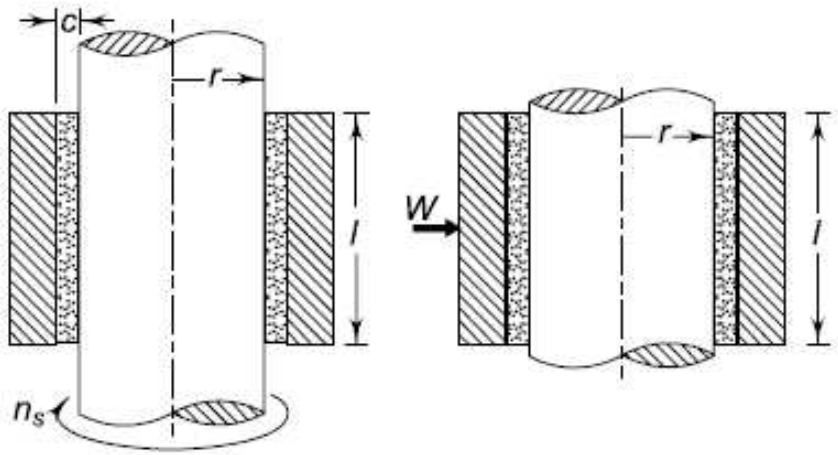

(a) (b)

The frictional force will be ($f\,W$) and frictional torque will be ($f\,Wr$). Therefore,

$$(M_t)_f = f\,Wr = f\,(2prl)r = f(2p\,r^2 l) \qquad \text{(f)}$$

where f is the coefficient of friction.

From (d) and (f),

$$\frac{4\pi^2 r^3 l \mu n_s}{c} = f\,(2\,pr^2\,l)$$

$$f = (2\pi^2)\left(\frac{r}{c}\right)\left(\frac{\mu n_s}{p}\right) \qquad \text{(Petroff's equation)}$$

Atmiya University Rajkot

Petroff's equation indicates that there are two important dimensionless parameters, namely, $\left(\frac{r}{c}\right)$ and $\left(\frac{\mu n_s}{p}\right)$ that govern the coefficient of friction and other frictional properties like frictional torque, frictional power loss and temperature rise in the bearing.

Atmiya University Rajkot

Atmiya University Rajkot

Bearing Characteristic Number

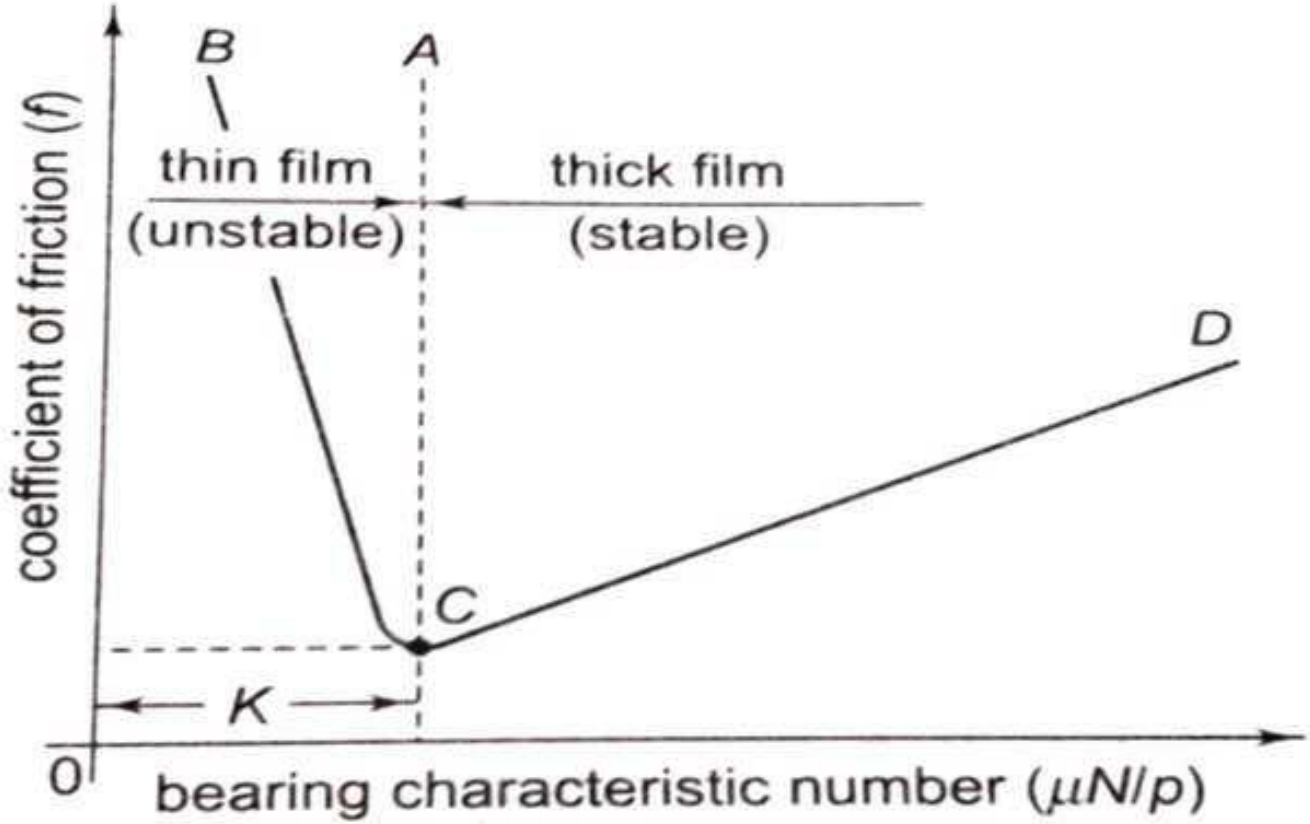

$\mu N/p$ Curve

Atmiya University
Rajkot

- In hydrodynamic bearings, initially the journal is at rest.
- There is no relative motion and no hydrodynamic film.
- Therefore, there is metal to metal contact between the surfaces of the journal and the bearing.
- As the journal starts to rotate, it takes some time for the hydrodynamic film to build sufficient pressure in the clearance space.
- During this period, there is partial metal to metal contact and a partial lubricant film.
- This is thin film lubrication.
- As the speed is increased, more and more lubricant is forced into the wedge-shaped clearance space and sufficient pressure is built up, separating the surfaces of the journal and the bearing.
- This is thick film lubrication.
- Therefore, there is a transition from thin film lubrication to thick film lubrication as the speed increases.
- The transition from thin film lubrication to thick film hydrodynamic lubrication can be better visualized by means of a curve called $\mu N/p$ *curve*.

Atmiya University Rajkot

- The *μN/p curve* is an experimental curve developed by McKee brothers.
- A *bearing characteristic number is a* dimensionless group of parameters given by,
- $$\text{Bearing characteristic number} = \left(\frac{\mu N}{p}\right)$$

where,

- *μ= absolute viscosity of the lubricant*
- *N = speed of the journal*
- *p = unit bearing pressure (load per unit of* projected area of bearing)
- The bearing characteristic number is plotted on the abscissa.
- The coefficient of friction *f is plotted* on the ordinate.
- The coefficient of friction *f is the* ratio of tangential frictional force to the radial load acting on the bearing.
- As seen in Fig., there are two distinct parts of the curve—*BC and CD.*

Atmiya University Rajkot

- (i) In the region *BC, there is partial metal* to metal contact and partial patches of lubricant. This is the condition of thin film or boundary lubrication.
- (ii) In the region *CD, there is relatively thick* film of lubricant and hydrodynamic lubrication takes place.
- (iii) *AC is the dividing line between these two* modes of lubrication. The region to the left of the line *AC is the thin film zone while the* region to the right of the line *AC is the thick* film zone.
- (iv) It is observed that the coefficient of friction is minimum at *C or at the transition between* these two modes. The value of the bearing characteristic number corresponding to this minimum coefficient is called the *bearing modulus. It is denoted by K in the figure.*
- The bearing should not be operated near the critical value *K at the point C. A slight drop in the* speed *(N) or a slight increase in the load (p) will* reduce the value of $\mu N/p$ *resulting in boundary* lubrication.
- It is observed from the $(\mu N/p)$ *curve that when* viscosity of the lubricant is very low, the value of $(\mu N/p)$ *parameter will be low and boundary* lubrication will result. Therefore, if the viscosity of the lubricant is very low then the lubricant will not separate the surfaces of the journal and the bearing and metal to metal contact will occur resulting in excessive wear at the contacting surfaces.

Aligarh University Rajkot

- The ($\mu N/p$) *curve is important because it defines* the stability of hydrodynamic journal bearings and helps to visualize the transition from boundary lubrication to thick film lubrication.

Atmiya University
Rajkot

VISCOUS FLOW THROUGH RECTANGULAR SLOT

The flow of lubricating oil through a rectangular slot is shown in Fig. 16.12(a). l is the length of the slot in the direction of flow, while b and h are

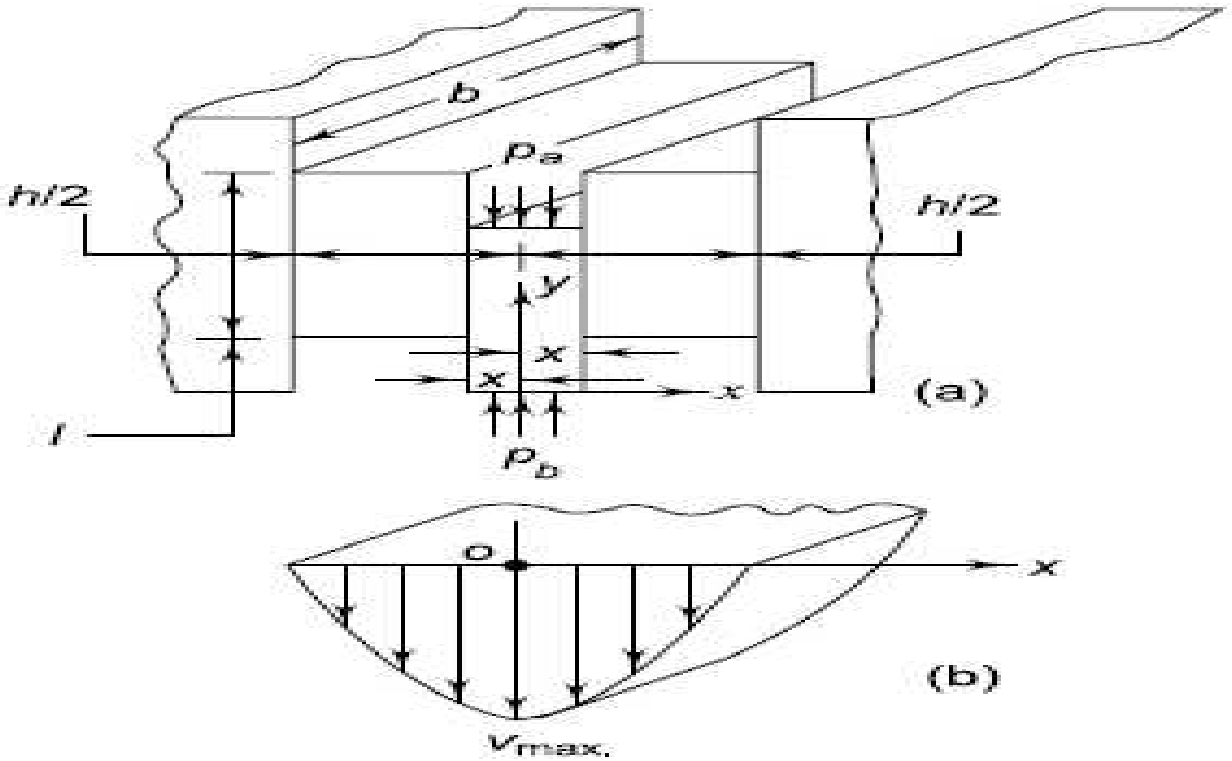

Fig. 16.12 *Viscous flow through slot: (a) Rectangular slot (b) Velocity distribution*

Atmiya University Rajkot

dimensions of the slot in a plane perpendicular to the direction of flow. The dimensions b is very large compared with h so that losses at the sides are neglected. The pressure difference between the

two sides of the central slice is $(p_a - p_b)$ or Δp. The downward force due to this pressure difference is area $(2xb)$ multiplied by the pressure difference (Δp) or $(2xb\ \Delta p)$. On account of this force, the rectangular slice of width $(2x)$ is extruded down. The shear resistance on both surfaces of the slice is due to the viscosity of the lubricant. According to Newton's law,

$$P = \mu A\left(\frac{dU}{dh}\right)$$

$$= \mu(2lb)\left(\frac{dv}{dx}\right)$$

where v is the velocity in the Y direction.

Considering equilibrium of forces in the vertical direction,

$$2xb\Delta p = -\mu(2lb)\left(\frac{dv}{dx}\right)$$

or

$$dv = -\left(\frac{\Delta p}{\mu l}\right)x\,dx$$

The negative sign is introduced in the above equation because velocity v decreases as x increases.

Integrating the expression,

$$v = -\left(\frac{\Delta p}{\mu l}\right)\frac{x^2}{2} + C \qquad \text{(a)}$$

Atmiya University Rajkot
Atmiya University Rajkot

The constant C of integration is evaluated from the boundary condition,

$$v = 0 \quad \text{when} \quad x = \pm\left(\frac{h}{2}\right)$$

Therefore,

$$C = \left(\frac{\Delta p}{\mu l}\right)\frac{h^2}{8} \tag{b}$$

From (a) and (b),

$$v = \frac{\Delta p}{2\mu l}\left[\frac{h^2}{4} - x^2\right] \tag{c}$$

It is observed from Eq. (c), that the velocity distribution along the X-axis is parabolic, which is shown in Fig. 16.12(b). The maximum velocity at the centre ($x = 0$) is given by,

$$v_{\text{max.}} = \frac{\Delta p h^2}{8\mu l}$$

For parabolic profile, the average height is two-third of the maximum height. Therefore,

$$(v_{\text{ave}}) = \left(\frac{2}{3}\right)v_{\text{max.}} = \frac{\Delta p h^2}{12\mu l}$$

The flow Q of the lubricant through the slot is given by,

$$Q = (v_{\text{ave}}) \times (\text{area}) = \left(\frac{\Delta p h^2}{12\mu l}\right) \times (bh)$$

$$\therefore \quad Q = \frac{\Delta p b h^3}{12\mu l} \tag{16.7}$$

This is the fundamental equation for viscous flow through the rectangular slot.

Atmiya University Rajkot

RAIMONDI AND BOYD METHOD

There is no exact solution to Reynold's equation for a journal bearing having a finite length. However, AA Raimondi and John Boyd of Westinghouse Research Laboratory solved this equation on computer using the iteration technique. The results of this work are available in the form of charts and tables. In the Raimondi and Boyd method, the performance of the bearing is expressed in terms of dimensionless parameters. Table 16.1 gives values of these parameters[2,3] for a full journal bearing with side flow.

In Fig. 16.25, O and O' are the axes of bearing and journal respectively. The distance OO' is called eccentricity and denoted by the letter e. The radial clearance c is given by,

$$c = R - r \qquad (16.15)$$

Atmiya University Rajkot

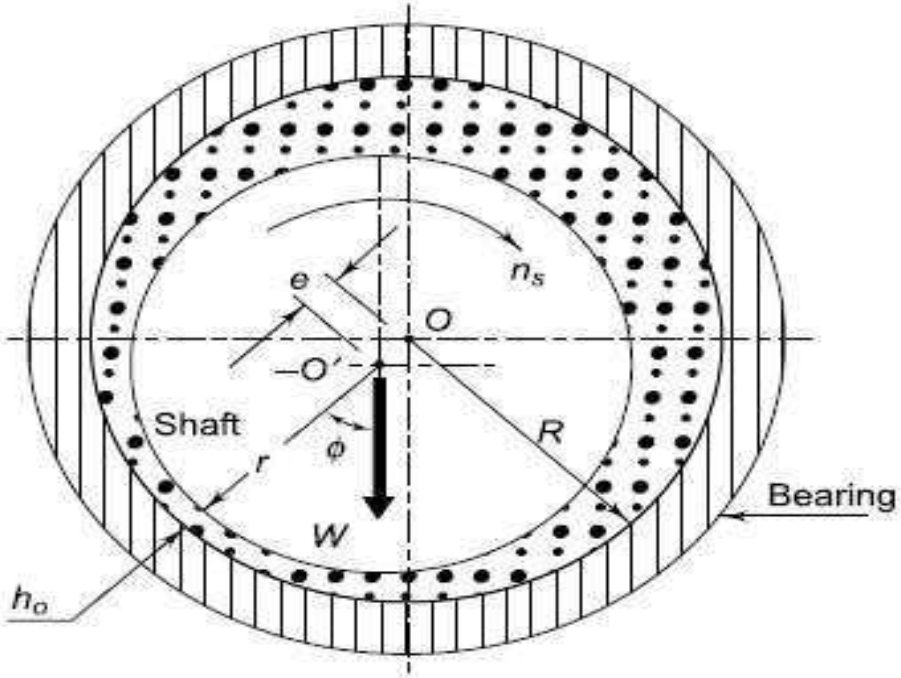

Fig. 16.25

where,

c = radial clearance (mm)

R = radius of bearing (mm)

r = radius of journal (mm)

The eccentricity ratio (ε) is defined as the ratio of eccentricity to radial clearance.

Therefore,

$$\varepsilon = \frac{e}{c} \tag{16.16}$$

where, ε is the eccentricity ratio.

Atmiya University Rajkot

Referring to Fig. 16.25,

$$R = e + r + h_o \qquad \text{(a)}$$

where,

h_o = minimum film thickness (mm)

Substituting Eq. (16.16) in expression (a),

$$c = R - r = e + h_o = c\varepsilon + h_o$$

or $$c\,(1 - \varepsilon) = h_o$$

$$\therefore \qquad \varepsilon = 1 - \left(\frac{h_o}{c}\right) \qquad (16.17)$$

The quantity $\left(\frac{h_o}{c}\right)$ is called the minimum film thickness variable.

The Sommerfeld number is given by

$$S = \left(\frac{r}{c}\right)^2 \frac{\mu n_s}{p} \qquad (16.18)$$

where,

S = Sommerfeld number (dimensionless)

μ = viscosity of the lubricant (N-s/mm^2) or (MPa-s)

n_s = journal speed (rev./s)

p = unit bearing pressure, i.e., load per unit of the projected area (N/mm^2)

The Sommerfeld number contains all variables, which are controlled by the designer.

The angle ϕ shown in Fig. 16.25 is called the angle of eccentricity or attitude angle. It locates the position of minimum film thickness with respect to the direction of load. The values of ϕ given in Table 16.1 are in degrees. The coefficient of friction variable (CFV) is given by,

Atmiya University Rajkot

Table 16.1 *Dimensionless performance parameters for full journal bearing with side flow*

$\left(\frac{l}{d}\right)$	ε	$\left(\frac{h_o}{c}\right)$	S	ϕ	$\left(\frac{r}{c}\right)f$	$\left(\frac{Q}{rcn_s l}\right)$	$\left(\frac{Q_s}{Q}\right)$	$\left(\frac{p}{p_{max.}}\right)$
∞	0	1.0	∞	(70.92)	∞	π	0	–
	0.1	0.9	0.240	69.10	4.80	3.03	0	0.826
	0.2	0.8	0.123	67.26	2.57	2.83	0	0.814
	0.4	0.6	0.0626	61.94	1.52	2.26	0	0.764
	0.6	0.4	0.0389	54.31	1.20	1.56	0	0.667
	0.8	0.2	0.021	42.22	0.961	0.760	0	0.495
	0.9	0.1	0.0115	31.62	0.756	0.411	0	0.358
	0.97	0.03	–	–	–	–	0	–
	1.0	0	0	0	0	0	0	0
1	0	1.0	∞	(85)	∞	π	0	–
	0.1	0.9	1.33	79.5	26.4	3.37	0.150	0.540
	0.2	0.8	0.631	74.02	12.8	3.59	0.280	0.529
	0.4	0.6	0.264	63.10	5.79	3.99	0.497	0.484
	0.6	0.4	0.121	50.58	3.22	4.33	0.680	0.415
	0.8	0.2	0.0446	36.24	1.70	4.62	0.842	0.313
	0.9	0.1	0.0188	26.45	1.05	4.74	0.919	0.247
	0.97	0.03	0.00474	15.47	0.514	4.82	0.973	0.152
	1.0	0	0	0	0	0	1.0	0
$\left(\frac{1}{2}\right)$	0	1.0	∞	(88.5)	∞	π	0	–
	0.1	0.9	4.31	81.62	85.6	3.43	0.173	0.523
	0.2	0.8	2.03	74.94	40.9	3.72	0.318	0.506
	0.4	0.6	0.779	61.45	17.0	4.29	0.552	0.441
	0.6	0.4	0.319	48.14	8.10	4.85	0.730	0.365
	0.8	0.2	0.0923	33.31	3.26	5.41	0.874	0.267
	0.9	0.1	0.0313	23.66	1.60	5.69	0.939	0.206
	0.97	0.03	0.00609	13.75	0.610	5.88	0.980	0.126
	1.0	0	0	0	0	–	1.0	0
$\left(\frac{1}{4}\right)$	0	1.0	∞	(89.5)	∞	π	0	–
	0.1	0.9	16.2	82.31	322.0	3.45	0.180	0.515
	0.2	0.8	7.57	75.18	153.0	3.76	0.330	0.489
	0.4	0.6	2.83	60.86	61.1	4.37	0.567	0.415
	0.6	0.4	1.07	46.72	26.7	4.99	0.746	0.334
	0.8	0.2	0.261	31.04	8.8	5.60	0.884	0.240
	0.9	0.1	0.0736	21.85	3.50	5.91	0.945	0.180
	0.97	0.03	0.0101	12.22	0.922	6.12	0.984	0.108
	1.0	0	0	0	0	–	1.0	0

Atmiya University Rajkot
Atmiya University Rajkot

$$(\text{CFV}) = \left(\frac{r}{c}\right) f \qquad (16.19)$$

where f is the coefficient of friction. The frictional torque is given by,

$$(M_t)_f = fWr \text{ N-mm}$$

$$\begin{aligned}\text{Frictional power} &= (2\pi n_s)\,(fWr) \text{ N-mm/s}\\ &= (2\pi n_s)\,(fWr)\,(10^{-3}) \text{ W}\\ &= (2\pi n_s)\,(fWr)\,(10^{-6}) \text{ kW}\end{aligned}$$

Therefore,

$$(\text{kW})_f = \frac{2\pi n_s f W r}{10^6} \qquad (16.20)$$

The flow variable (FV) is given by,

$$(\text{FV}) = \frac{Q}{r c n_s l} \qquad (16.21)$$

where,

l = length of the bearing (mm)

Q = flow of the lubricant (mm^3/s)

In this case, Q represents the total flow of the lubricating oil, a part of which is circulated around the periphery of the journal, while the remaining oil flows out as side leakage. Q_s represents the side leakage, which can be calculated from the values of parameter $\left(\frac{Q_s}{Q}\right)$ given in the table.

The maximum pressure (p_{max}) developed in the film is calculated from the ratio $\left(\frac{p}{p_{max.}}\right)$ given in the last column of the table. This value is based on the assumption that the oil is supplied at the atmospheric pressure. If the oil is supplied at a higher pressure, the maximum pressure ($p_{max.}$) will also increase by the corresponding value.

Atmiya University Rajkot

TEMPERATURE RISE

- Heat is generated in the bearing due to viscosity of the lubricating oil. The frictional work is converted into heat, which increases the temperature of the lubricant.
- Assuming that the total heat generated in the bearing is carried away by the total oil flow in the bearing, the expression for temperature rise can be determined. From Eq. (16.20),

$$(\text{kW})_f = (2\pi n_s)(f\,Wr)(10^{-6})$$

The heat generated (H_g) is given by,

$$H_g = (\text{kW})_f = (2\pi n_s)(fWr)(10^{-6})\ \text{kW or kJ/s}$$

Substituting,

$$f = \left(\frac{c}{r}\right)(\text{CFV}) \quad \text{and} \quad W = 2\,plr$$

in the above expression

$$H_g = (4\pi)(10^{-6})rcn_s lp\,(\text{CFV}) \qquad \text{(a)}$$

The heat carried away by oil flow (H_c) is given by,

$$H_c = m\,C_p\,\Delta t \qquad \text{(b)}$$

where,

m = mass of the lubricating oil passing through the bearing (kg/s)

C_p = specific heat of lubricating oil (kJ/kg°C)

Δt = temperature rise (°C)

Atmiya University Rajkot

The mass of the lubricating oil is given by,

$$m = \rho Q\,(10^{-6})\ \text{kg/s}$$

Substituting

$$Q = rcn_s l\,(\text{FV})$$

the mass is given by

$$m = \rho(rcn_s l)\,(FV)\,(10^{-6})\ \text{kg/s} \qquad \text{(c)}$$

Substituting Eq. (c) in Eq. (b),

$$H_c = C_p\,\Delta t\,\rho(rcn_s l)\,(\text{FV})\,(10^{-6}) \qquad \text{(d)}$$

Equating the expressions for H_g and H_c,

$$\Delta t = \left(\frac{4\pi p}{\rho C_p}\right)\frac{(\text{CFV})}{(\text{FV})} \qquad (16.22)$$

For most lubricating oils,

$$\rho = 0.86 \quad \text{and} \quad C_p = 1.76\ \text{kJ/kg°C}$$

Substituting these values in Eq. (16.22),

$$\Delta t = \frac{8.5\,p(\text{CFV})}{(\text{FV})} \qquad (16.23)$$

The average temperature of the lubricating oil is given by

$$T_{\text{av}} = T_i + \left(\frac{\Delta t}{2}\right) \qquad (16.24)$$

where T_i is the inlet temperature.

Atmiya University Rajkot
Atmiya University Rajkot

BEARING DESIGN—SELECTION OF PARAMETERS

- In the preliminary stages of journal bearing design, it is required to select suitable values for the following parameters:

(i) length-to-diameter ratio

(ii) unit bearing pressure

(iii) start-up load

(iv) radial clearance

(v) minimum oil film thickness

(vi) maximum oil film temperature.

Atmiya University Rajkot

- ***(i) Length to Diameter Ratio: In the design of*** hydrodynamic bearings, the diameter of the shaft is determined by strength or rigidity considerations and not on the basis of bearing capacity. The shaft diameter is usually determined by using the criteria such as permissible stress, permissible lateral deflection or permissible angle of twist. Therefore, it is the bearing length that the designer has to decide to obtain a given bearing capacity.
- The length to diameter ratio (*l/d*) *affects the* performance of the bearing. As the ratio increases, the resulting film pressure increases as shown in Fig. A long bearing, therefore, has more load carrying capacity compared with a short bearing. A short bearing, on the other hand, has greater side flow, which improves heat dissipation.

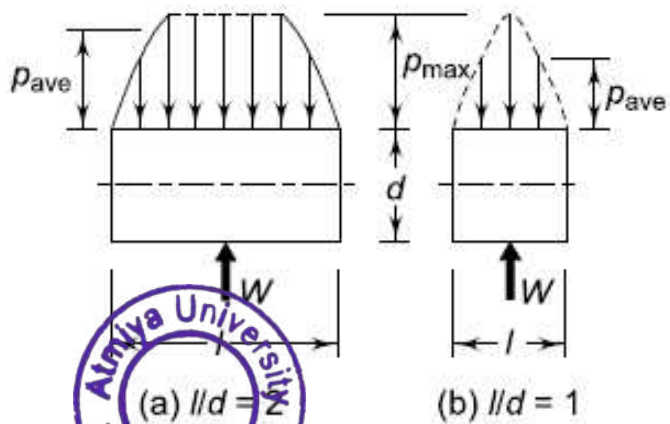

Fig. 16.26 *Effect of (l/d) ratio on Average Bearing Pressure*

Atmiya University Rajkot

- The long bearings are more susceptible to metal to metal contact at the two edges, when the shaft is deflected under load. The longer the bearing, the more difficult it is to get sufficient oil flow through the passage between the journal and the bearing.
- Therefore, the design trend is to use *(l/d) ratio as* 1 or less than 1. When the shaft and the bearing are precisely aligned, the shaft deflection is within the limit and cooling of lubricant and bearing does not present a serious problem, the *(l/d) ratio* can be taken as more than 1. In practice, the *(l/d)* ratio varies from 0.5 to 2.0, but in the majority of applications, it is taken as 1 or less than 1. The following terminology is used in relation to *(l/d)* ratio,
- (a) When *(l/d) ratio is more than 1, the bearing* is called '*long' bearing.*
- (b) When *(l/d) ratio is less than 1, the bearing is* called '*short' bearing.*
- (c) When *(l/d) ratio is equal to 1, the bearing is* called '*square' bearing.*

Atmiya University Rajkot

- ***(ii) Unit Bearing Pressure: The unit bearing*** pressure is the load per unit of projected area of the bearing in running condition. It depends upon a number of factors, such as bearing material, operating temperature, the nature and frequency of load and service conditions. The values of unit bearing pressure, based on past experience, are given in Table.

Application	Unit bearing pressure (p) (N/mm^2)
(i) *Diesel engines*	
Main bearing	5–10
Crank pin	7–14
Gudgeon pin	13–14
(ii) *Automotive engines*	
Main bearing	3–4
Crank pin	10–14
(iii) *Air compressors*	
Main bearing	1–1.5
Crank pin	1.5–3.0
(iv) *Centrifugal pumps*	
Main bearing	0.5–0.7
(v) *Electric motors*	
Main bearing	0.7–1.5
(vi) *Transmission shafting*	
Light duty	0.15
Heavy duty	1.00
(vii) *Machine tools*	
Main bearing	2

Atmiya University Rajkot

- ***(iii) Start-up Load: The unit bearing pressure for*** starting conditions should not exceed 2 N/mm^2. The start-up load is the static load when the shaft is stationary. It mainly consists of the dead weight of the shaft and its attachments. The start up load can be used to determine the minimum length of the bearing on the basis of starting conditions.
- ***(iv) Radial Clearance: The radial clearance should*** be small to provide the necessary velocity gradient. However, this requires costly finishing operations, rigid mountings of the bearing assembly and clean lubricating oil without any foreign particles. This increases the initial and maintenance costs. The practical value of radial clearance is 0.001 mm per mm of the journal radius.

$$c = (0.001)\ r$$

- ***(v) Minimum Oil Film Thickness: The surface finish*** of the journal and the bearing is governed by the value of the minimum oil film thickness selected by the designer and vice versa. There is a lower limit for the minimum oil film thickness, below which metal to metal contact occurs and the hydrodynamic film breaks. This lower limit is given by,

$$h_0 = (0.0002)r$$

Atmiya University Rajkot

- ***(vi) Maximum Oil Film Temperature :The*** lubricating oil tends to oxidise when the operating temperature exceeds 120°. Also, the surface of babbitt bearing tends to soften at 125°C (for bearing pressure of 7 N/mm^2) and at 190°C (for bearing pressure of 1.4 N/mm^2). Therefore, the operating temperature should be kept within these limits. In general, the limiting temperature is 90°C for bearings made of babbitts.
- Bearings can be designed for two different conditions—bearings for maximum load carrying capacity and bearings for minimum frictional loss.
- The optimum values of h_o/c for full journal bearing for these conditions are as follows:

$\left(\frac{l}{d}\right)$ ratio	$\left(\frac{h_o}{c}\right)$ for maximum load	$\left(\frac{h_o}{c}\right)$ for minimum friction
∞	0.66	0.60
1	0.53	0.30
0.5	0.43	0.12
0.25	0.27	0.03

- The designer can use the above values for design of bearings under optimum conditions.

Atmiya University Rajkot

NUMERICALS

Atmiya University
Rajkot

The following data is given for a 360° hydrodynamic bearing:

radial load = 3.2 kN

journal speed = 1490 rpm

journal diameter = 50 mm

bearing length = 50 mm

radial clearance = 0.05 mm

viscosity of lubricant = 25 cP

Assuming that the total heat generated in the bearing is carried by the total oil flow in the bearing, calculate

(i) coefficient of friction

(ii) power lost in friction

(iii) minimum oil film thickness

(iv) flow requirement in litres/min

(v) temperature rise

Atmiya University Rajkot

Solution

Given:- W = 3.2 kN, n = 1490 rpm, d = 50 mm

l = 50 mm c = 0.05 mm z = 25 Cp

Step I *Performance parameters*

$$p = \frac{W}{ld} = \frac{(3.2)(1000)}{(50)(50)} = 1.28\ \text{N/mm}^2$$

$$S = \left(\frac{r}{c}\right)^2 \frac{\mu n_s}{p} = \left(\frac{25}{0.05}\right)^2 \left(\frac{25}{10^9}\right)\left(\frac{1490}{60}\right)\left(\frac{1}{1.28}\right)$$

$$= 0.121$$

$$\left(\frac{l}{d}\right) = \left(\frac{50}{50}\right) = 1$$

From Table 16.1,

$$\left(\frac{r}{c}\right) f = 3.22 \qquad \left(\frac{h_o}{c}\right) = 0.4 \qquad \frac{Q}{rcn_s l} = 4.33$$

Step II *Coefficient of friction*

$$f = 3.22\left(\frac{c}{r}\right) = 3.22\left(\frac{0.05}{25}\right) = 0.00644 \qquad \text{(i)}$$

Step III *Power lost in friction*

From Eq. (16.20),

$$(\text{kW})_f = \frac{2\pi n_s\ fWr}{10^6}$$

$$= \frac{2\pi\,(1490/60)\,(0.00644)\,(3.2)(1000)\,(25)}{10^6}$$

$$= 0.08 \qquad \text{(ii)}$$

Atmiya University Rajkot

Step IV *Minimum oil film thickness*

$$h_o = 0.4c = 04(0.05) = 0.02 \text{ mm} \qquad \text{(iii)}$$

Step V *Flow requirement*

$$Q = 4.33\, rcn_s\, l = 4.33(25)(0.05)(1490/60)(50)$$

$$= 6720.5 \text{ mm}^3/\text{s}$$

$$Q = (6720.5)\,(10^{-3}) \text{ cc/s}$$

$$Q = (6720.5)\,(10^{-3})(10^{-3}) \text{ litres/s } (1000 \text{ cc} = 1 \text{ litre})$$

$$Q = (6720.5)(10^{-6})\,(60) \text{ litre/min}$$

$$= 0.403 \text{ litre/min} \qquad \text{(iv)}$$

Step VI *Temperature rise*

From Eq. 16.23,

$$\Delta t = \frac{8.3\,p(\text{CFV})}{(\text{FV})}$$

$$= \frac{8.3(1.28)(3.22)}{(4.33)} = 7.9°C \qquad \text{(v)}$$

Atmiya University Rajkot
Atmiya University Rajkot

The following data is given for a full hydrodynamic bearing used for electric motor:

radial load = 1200 N

journal speed = 1440 rpm

journal diameter = 50 mm

static load on the bearing = 350 N

The values of surface roughness (cla) of the journal and the bearing are 2 and 1 micron *respectively. The minimum oil film thickness should be five times the sum of surface roughness of the journal and the bearings. Determine*

(i) length of the bearing;

(ii) radial clearance;

(iii) minimum oil fi lm thickness;

(iv) viscosity of lubricant; and

(v) fl ow of lubricant.

Select a suitable oil for this application assuming the operating temperature as 65°C.

Atmiya University Rajkot

- **Solution**
- Given:- *W = 1200 N n = 1440 rpm*
- *d = 50 mm static load = 350 N* h_o *= 5 (sum of surface roughness)*

Step I Length of the bearing

Starting condition

The starting load on the bearing is the static load, i.e., 350 N. As discussed in Article 16.13, the start-up bearing pressure is usually taken as 2 N/mm^2.

$$p = \frac{W}{ld} \quad \text{or} \quad l = \frac{W}{pd} = \frac{350}{(2)(50)} = 3.5\,\text{mm} \qquad \text{(a)}$$

Running condition

During running condition, the radial load on the bearing is 1200 N. From Table 16.2, the range of permissible bearing pressure in the application of an electric motor is from 0.7 to 1.5 N/mm^2. We will assume the permissible bearing pressure as 1 N/mm^2 in this range. Therefore, during running conditions,

$$p = \frac{W}{ld} \quad \text{or} \quad l = \frac{W}{pd} = \frac{1200}{(1)(50)} = 24\,\text{mm} \qquad \text{(b)}$$

From (a) and (b), the minimum length of the bearing is 24 mm.

$$\therefore \qquad \left(\frac{l}{d}\right) = \frac{24}{50} = 0.48$$

We will assume the standard value for (l/d) ratio as 0.5.

$$\left(\frac{l}{d}\right) = 0.50$$

$$l = 0.5\,d = 0.5\,(50) = 25\,\text{mm} \qquad \text{(i)}$$

Atmiya University Rajkot

Step II *Radial clearance*

The standard value of radial clearance in case of Babbitt bearing is given by,

$$c = (0.001)\, r = (0.001)(25) = 0.025 \text{ mm} \qquad \text{(ii)}$$

Step III *Minimum oil film thickness*

The minimum oil film thickness is given by,

$h_o = 5$ (sum of values of surface roughness of journal and bearing)

$$h_o = 5\,(2 + 1) = 15 \text{ microns} = 0.015 \text{ mm} \qquad \text{(iii)}$$

Step IV *Viscosity of lubricant*

Refer to Table 16.1,

$$\left(\frac{l}{d}\right) = \frac{1}{2} \quad \text{and} \quad \left(\frac{h_o}{c}\right) = \frac{0.015}{0.025} = 0.6$$

For the above mentioned values,

$$S = 0.779 \quad \text{and} \quad \frac{Q}{rcn_s l} = 4.29$$

$$n_s = \frac{1440}{60} = 24 \text{ rps}$$

$$p = \frac{W}{ld} = \frac{1200}{(25)(50)} = 0.96 \text{ N/mm}^2$$

$$S = \left(\frac{r}{c}\right)^2 \frac{\mu n_s}{p} \quad \text{or} \quad 0.779 = (1000)^2 \frac{\mu(24)}{(0.96)}$$

or $\mu = (31.16)(10^{-9})$ N-sec/mm^2 or 31.16 cP (iv)

Atmiya University Rajkot

Step V *Selection of lubricant*

Referring to Fig. 16.8, it is observed that the values of viscosity for SAE-30 and SAE-40 oils are 30 and 38 cP respectively at the operating temperature of 65°C. We will select SAE-40 oil for this application, which will satisfy the minimum viscosity of 31.16 cP.

Step VI *Flow of lubricant*

$$Q = 4.29\ rcn_s l = 4.29\ (25)(0.025)\ (24)(25)$$
$$= 1608.75\ \text{mm}^3/\text{s} \qquad \text{(v)}$$

Atmiya University Rajkot

Atmiya University Rajkot

The following data is given for a 360° hydrodynamic bearing:

radial load = 10 kN

journal speed = 1440 rpm

unit bearing pressure = 1000 kPa

clearance ratio (r/c) = 800

viscosity of lubricant = 30 mPa s

Assuming that the total heat generated in the bearing is carried by the total oil flow in the bearing, calculate:

(i) dimensions of bearing;

(ii) coefficient of friction;

(iii) power lost in friction;

(iv) total flow of oil;

(v) side leakage; and

(vi) temperature rise.

Atmiya University Rajkot

- **Solution**
- Given *W = 10 kN, n = 1440 rpm, p = 1000 kPa, r/c = 800, μ = 30 mPa s*
- *Step I Dimensions of bearing*

We will assume,

$$\left(\frac{l}{d}\right) = 1$$

$$p = 1000 \text{ kPa} = 1000\ (10^3) \text{ Pa} = 1000\ (10^3)(10^{-6}) \text{ MPa} = 1 \text{ MPa} = 1 \text{ N/mm}^2$$

$$p = \frac{W}{ld} = \frac{W}{d^2} \quad \text{or} \quad 1 = \frac{10\,000}{d^2} \quad \therefore\ d = 100 \text{ mm}$$

$$d = l = 100 \text{ mm} \qquad \text{(i)}$$

Step II Performance parameters

$$\mu = 30 \text{ m Pa s} = 30 \text{ milli Pascals s} = 30\ (10^{-3}) \text{ Pa s} = 30\ (10^{-9}) \text{ MPa s}$$

or $$\mu = 30\ (10^{-9}) \text{ N-s/mm}^2$$

$$S = \left(\frac{r}{c}\right)^2 \frac{\mu n_s}{p} = (800)^2 \frac{(30)(10^{-9})(1440/60)}{(1)} = 0.4608$$

The values of dimensionless performance parameters are obtained by linear interpolation from Table (16.1). The principal of linear interpolation is illustrated in Fig. 16.27. For (l/d =1)

Atmiya University Rajkot

$$\left(\frac{r}{c}\right) f = 5.79 + (12.8 - 5.79)\frac{(0.4608 - 0.264)}{(0.631 - 0.264)}$$

$$= 9.55$$

$$\left(\frac{Q}{rcn_s l}\right) = 3.99 - (3.99 - 3.59)\frac{(0.4608 - 0.264)}{(0.631 - 0.264)}$$

$$= 3.78$$

$$\frac{Q_s}{Q} = 0.497 - (0.497 - 0.28)\frac{(0.4608 - 0.264)}{(0.631 - 0.264)}$$

$$= 0.38$$

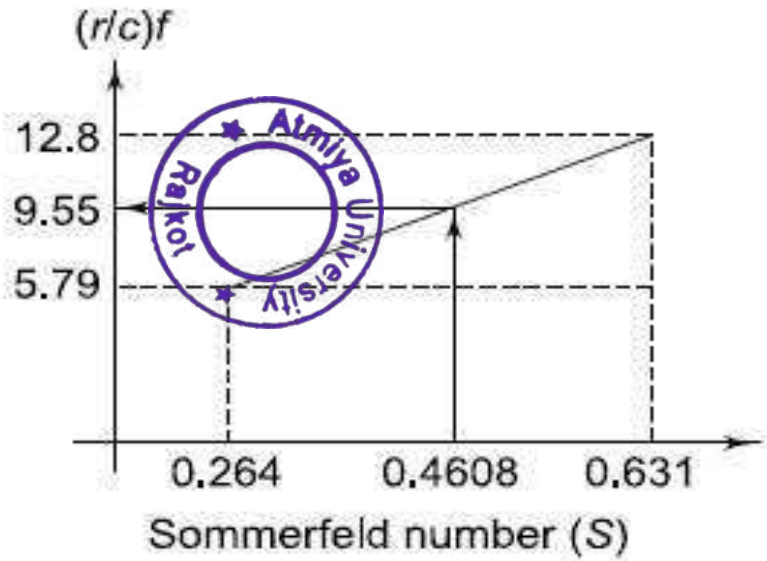

(a)

Atmiya University Rajkot

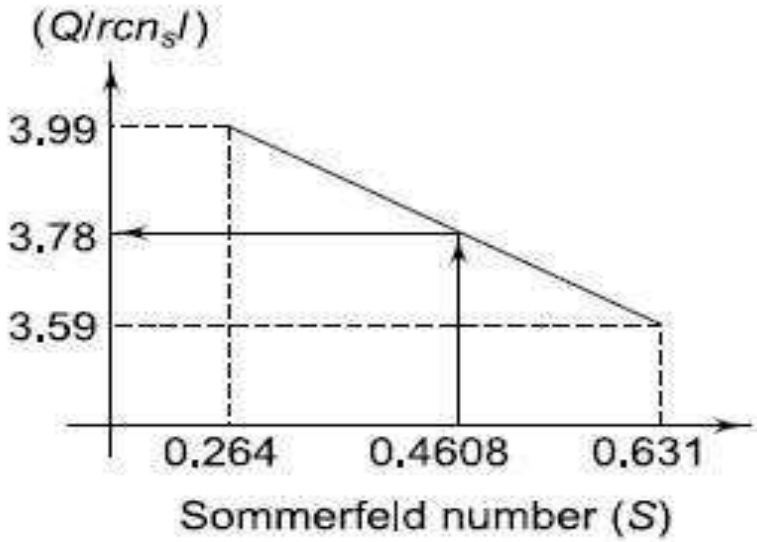

(b)

Fig. 16.27

Step III *Coefficient of friction*

$$f = 9.55\left(\frac{C}{P}\right) = 9.55\left(\frac{1}{800}\right) = 0.0119 \qquad \text{(ii)}$$

Step IV *Power lost in friction*

From Eq. (16.20),

$$(\text{kW})_f = \frac{2\pi n_s f W r}{10^6}$$

$$= \frac{2\pi(1440/60)(0.0119)(10000)(50)}{10^6} = 0.9 \qquad \text{(iii)}$$

Atmiya University Rajkot

Step V *Total flow of oil*

$$Q = 3.78 r c n_s l$$

$$= 3.78(50)\left(\frac{50}{800}\right)(1440/60)(100)$$

$$= 28\,350 \text{ mm}^3/\text{s} \qquad \text{(vi)}$$

Step VI *Side leakage*

$$Q_s = 0.38\,Q = 0.38(28\,350) = 10\,773 \text{ mm}^3/\text{s} \qquad \text{(v)}$$

Step VII *Temperature rise*

From Eq. 16.23,

$$\Delta t = \frac{8.3\,p(\text{CFV})}{(\text{FV})} = \frac{8.3(1)(9.55)}{(3.78)} = 22.97°C \qquad \text{(vi)}$$

Atmiya University Rajkot

Atmiya University Rajkot

Introduction to Gear

Design of Transmission Systems (21BTMECC404)

Unit No.3

Design of Gears

Prepared By:- Shivang S. Jani

Asst. Professor

Mechanical Engineering Department,

Atmiya University, Rajkot

GEAR DRIVE

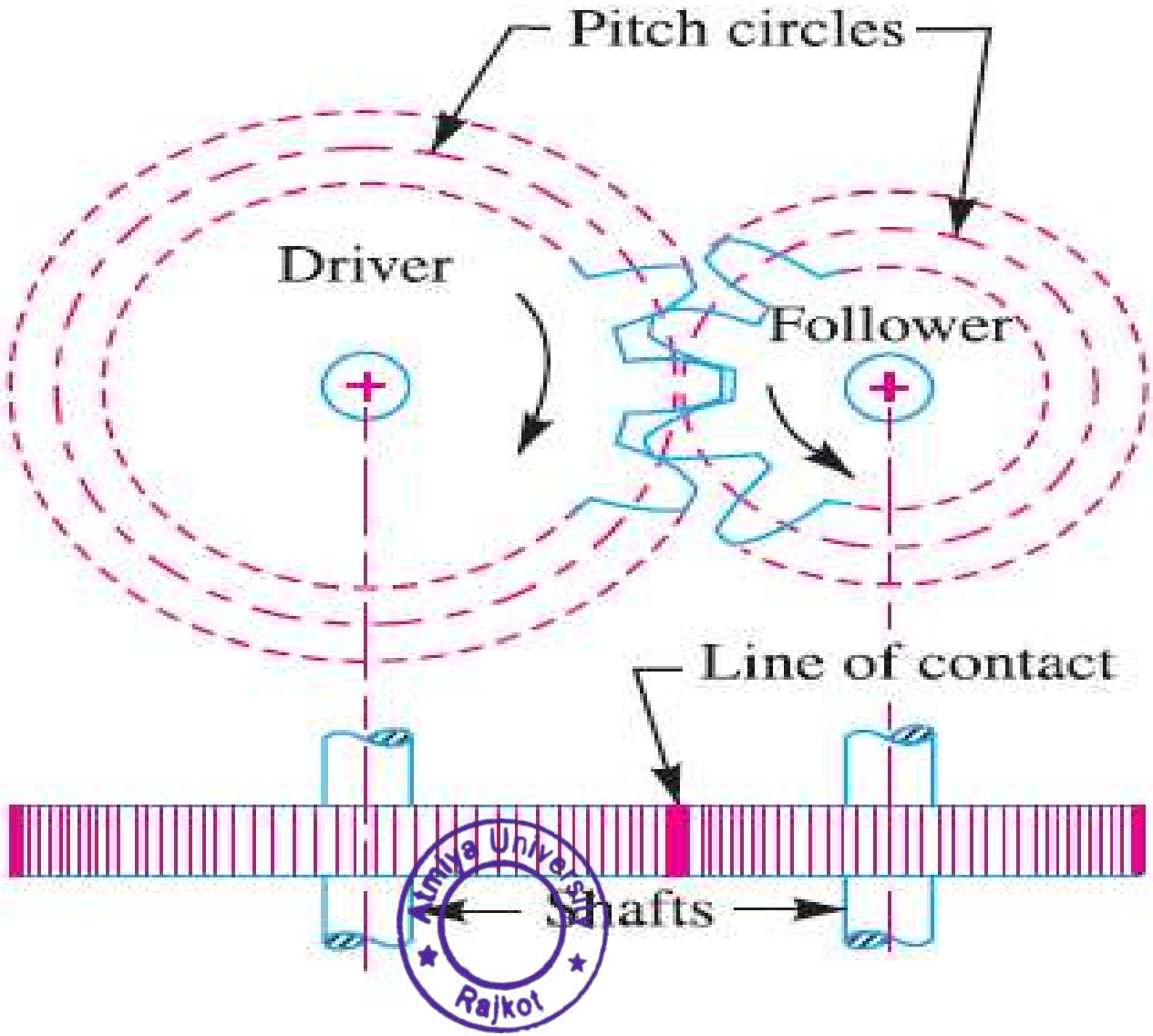

Atmiya University Rajkot

Advantages of Gear Drives

1. It transmits exact velocity ratio. (no slip)
2. It may be used to transmit large power.
3. It may be used for small centre distances of shafts which can be parallel, intersecting or non parallel and non intersecting.
4. It has high efficiency.
5. It has reliable service.
6. It has compact layout.
7. It may be used for higher speed ratio and high speed power transmission.

Atmiya University
Rajkot

Disadvantages of Gear Drives

1. Since the manufacture of gears require special tools and equipment, therefore it is costlier than other drives.
2. The error in cutting teeth may cause vibrations and noise during operation.
3. It requires suitable lubricant and reliable method of applying it, for the proper operation of gear drives.
4. It can not be used for transmitting power over the long distance

Atmiya University Rajkot

Classification of Gears

- According to the position of axes of the shafts.

1. Parallel (Spur)
2. Intersecting and Perpendicular (Bevel)
3. Intersecting and non-parallel (Bevel)
4. Non-intersecting and Perpendicular (Worm)
5. Non-intersecting and non-parallel (Crossed helical)

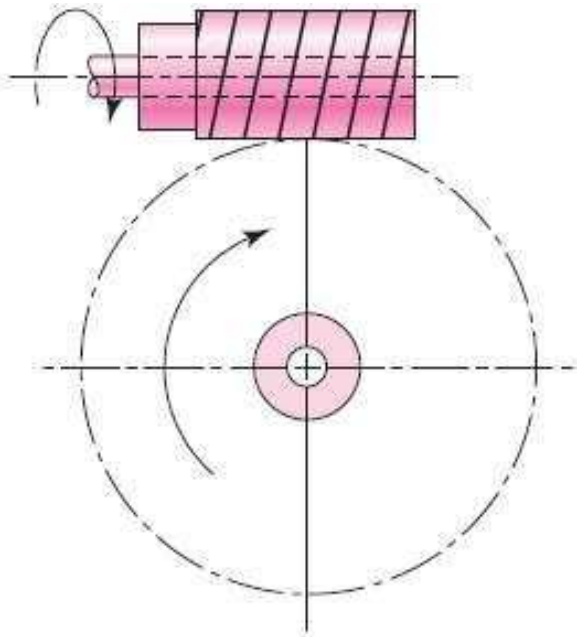

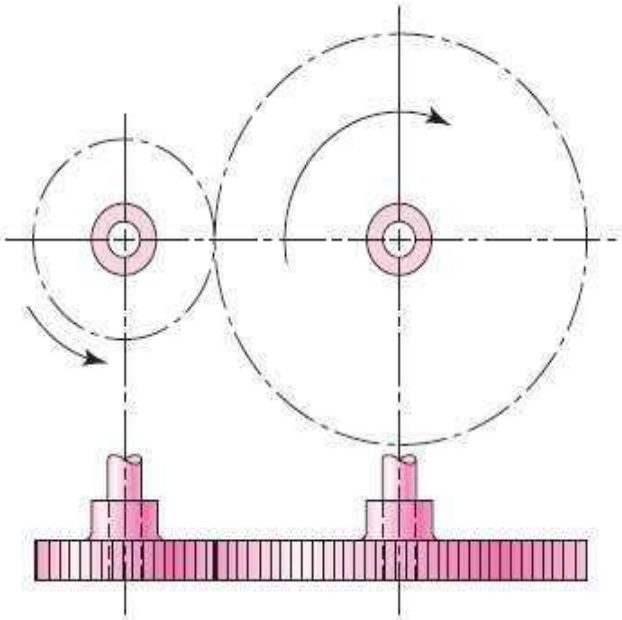

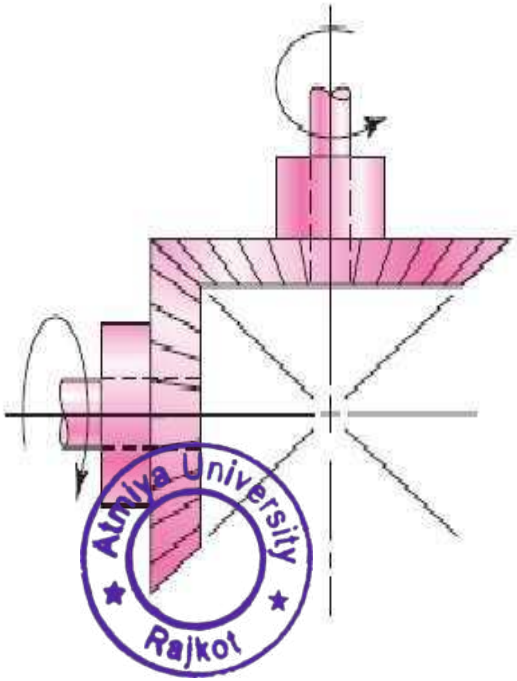

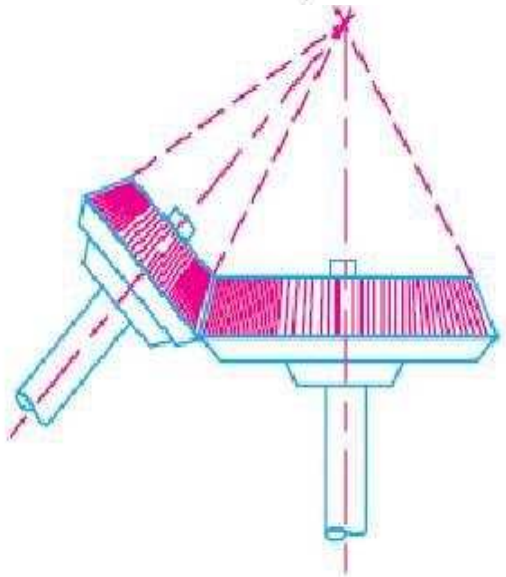

Atmiya University Rajkot

Classification of Gears

- According to the type of gearing.

1. External gearing
2. Internal gearing
3. Rack and pinion

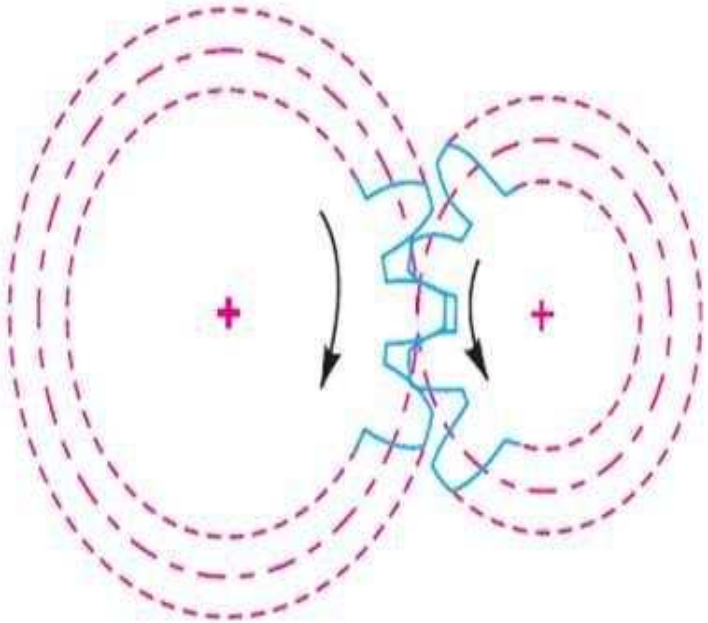

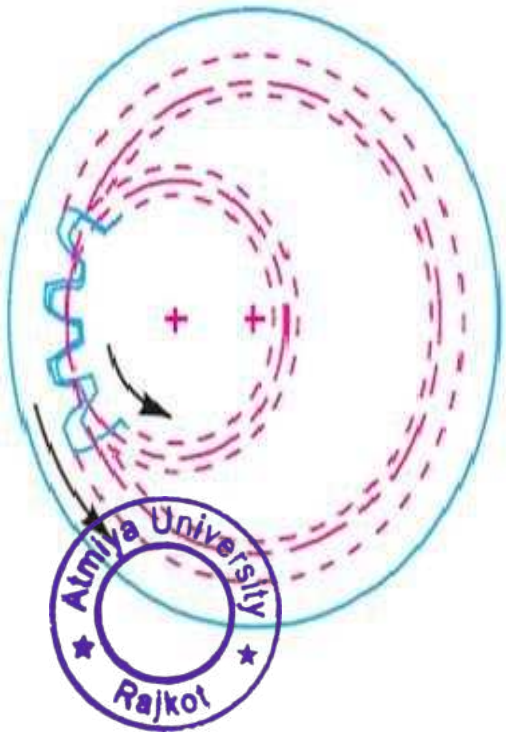

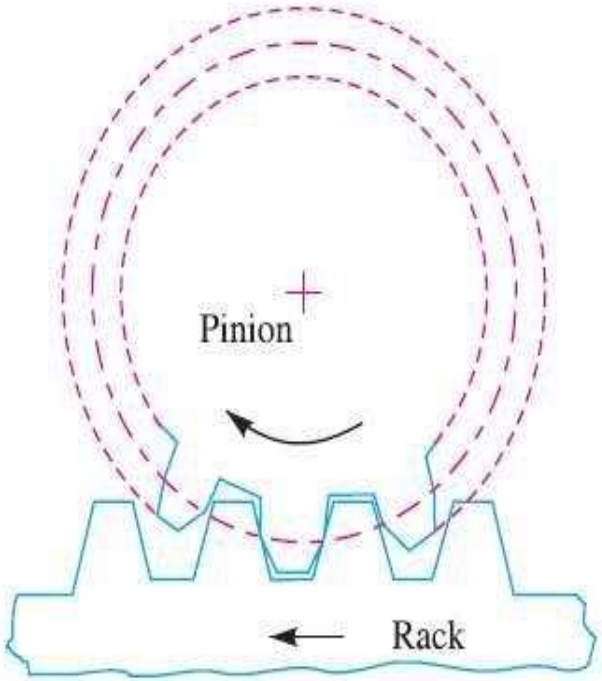

Atmiya University
Rajkot

Classification of Gears

- **According to the position of teeth on the gear surface.**

1. Straight (Spur)
2. Inclined (Helical)
3. Curved (Spiral)

- **According to the peripheral velocity of the gears. The gears, according to the peripheral velocity of the gears, may be classified as :**

1. Low velocity
2. Medium velocity
3. High velocity.

Atmiya University Rajkot

Spur Gear

Most commonly used Gear type.

Teeth are parallel to the axis of the gear.

Transmit power from one shaft to other parallel shaft.

Advantages:

Low Cost

Ease of manufacture

Availability

Disadvantages:

Only works with mating gear.

Axis of each gear must be parallel

Applications:

Washing Machines, Rolling Mills, Marine Engines etc.

Atmiya University Rajkot

Helical Gear

Teeth are at an angle to the gear axis

This gradual arrangement makes helical gear operate much more smoothly and quietly than spur gear

Advantages:

Smooth and quiet due to gradual tooth

Engagements

Parallel shaft arrangement similar to spur gear due to winding teeth for maximum torque transmission

Disadvantage:

Difficult to Manufacture

Cost is High

Resulting axial thrust component

Applications:

Fertilizer industries, Printing industries, earth moving industries, Conveyors, Elevators

Atmiya University Rajkot

Bevel Gear

Useful when the direction of shaft location has to be changed

Mounted on shaft that are 90deg apart, can also be designed to work in other angles

Teeth can be straight, Spiral or Hypoid

Advantages:

Operate on Shafts intersecting at an Angle

Sliding friction will be low

Disadvantages:

Assembled with respective shaft precisely

At high speed it will produce noise

Applications:

Textile Machine, Sewing Machine, Automobile vehicle etc.

Atmiya University Rajkot

Worm Gear

Used when large Gear Reduction is needed

Have good intersecting property

Used widely in material Handling and transportation machinery, machine tools etc…

Advantages:

Higher speed reduction could be secured;

speed reduction could be secured up to 300:1

Worm and worm gears operate silently

Disadvantages:

Manufacturing cost is high as compared with manufacturing cost of bevel gear

Worm and worm gear set will have heavy power losses

Efficiency will be low

Applications:

Tuning Instruments, Lifts/Elevators etc.

Atmiya University Rajkot

Herringbone Gear

Two helical gears that have been placed side by side

Referred to as “double helical”

No thrust loading on the bearings

Advantages:

The double helical form balances the inherent thrust forces

Efficient transfer of torque and smooth motion at very high rotational velocities

Disadvantages:

High cost due to special gear shaping equipment and special cutting tools

Applications:

Used in Heavy Machinery

Atmiya University Rajkot

Terminology: Terms used in Gears

1. **Pitch circle:** It is an imaginary circle which by pure rolling action, would give the same motion as the actual gear.
2. **Pitch circle diameter:** It is the diameter of the pitch circle. The size of the gear is usually specified by the pitch circle diameter. It is also called as pitch diameter.
3. **Pitch point:** It is a common point of contact between two pitch circles.
4. **Pitch surface:** It is the surface of the rolling discs which the meshing gears have replaced at the pitch circle.

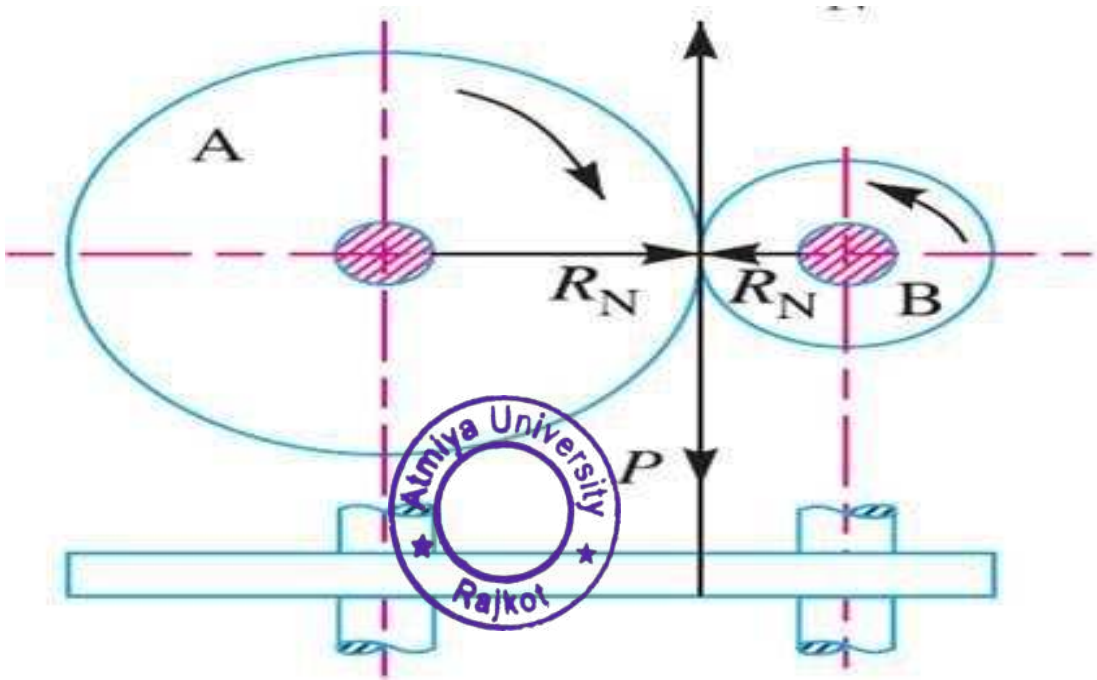

Atmiya University Rajkot

Terminology: Terms used in Gears

5. Pressure angle or angle of obliquity:

It is the angle between the common normal to two gear teeth at the point of contact and the common tangent at the pitch point. It is usually denoted by φ. The standard pressure angles are 14.5° and 20°.

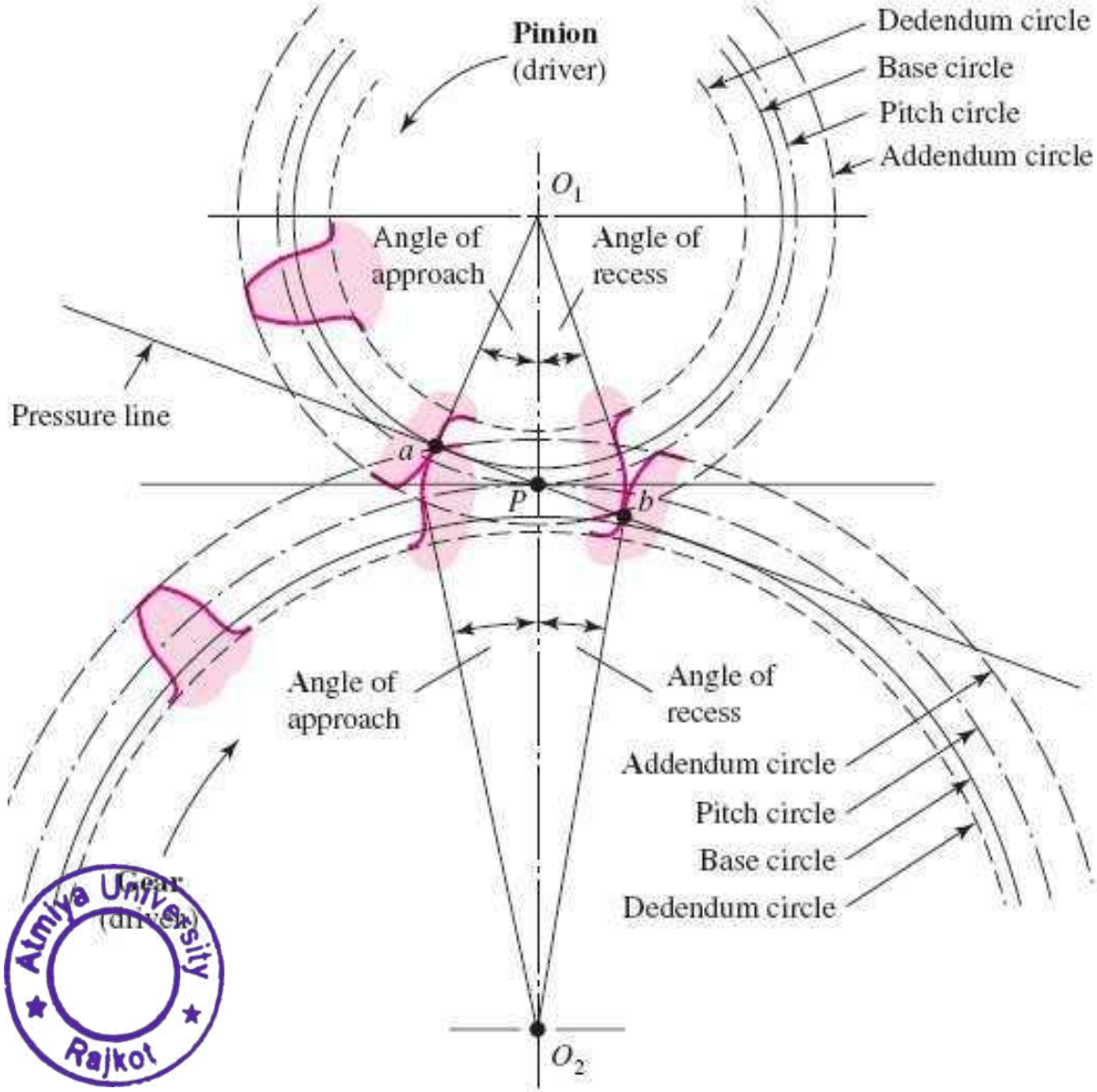

Atmiya University Rajkot

Terminology: Terms used in Gears

6. Addendum. It is the radial distance of a tooth from the pitch circle to the top of the tooth.

7. Dedendum. It is the radial distance of a tooth from the pitch circle to the bottom of the tooth.

8. Addendum circle. It is the circle drawn through the top of the teeth and is concentric with the pitch circle.

9. Dedendum circle. It is the circle drawn through the bottom of the teeth. It is also called **root circle.**

Note : Root circle diameter = Pitch circle diameter × cos φ, where φ is the pressure angle.

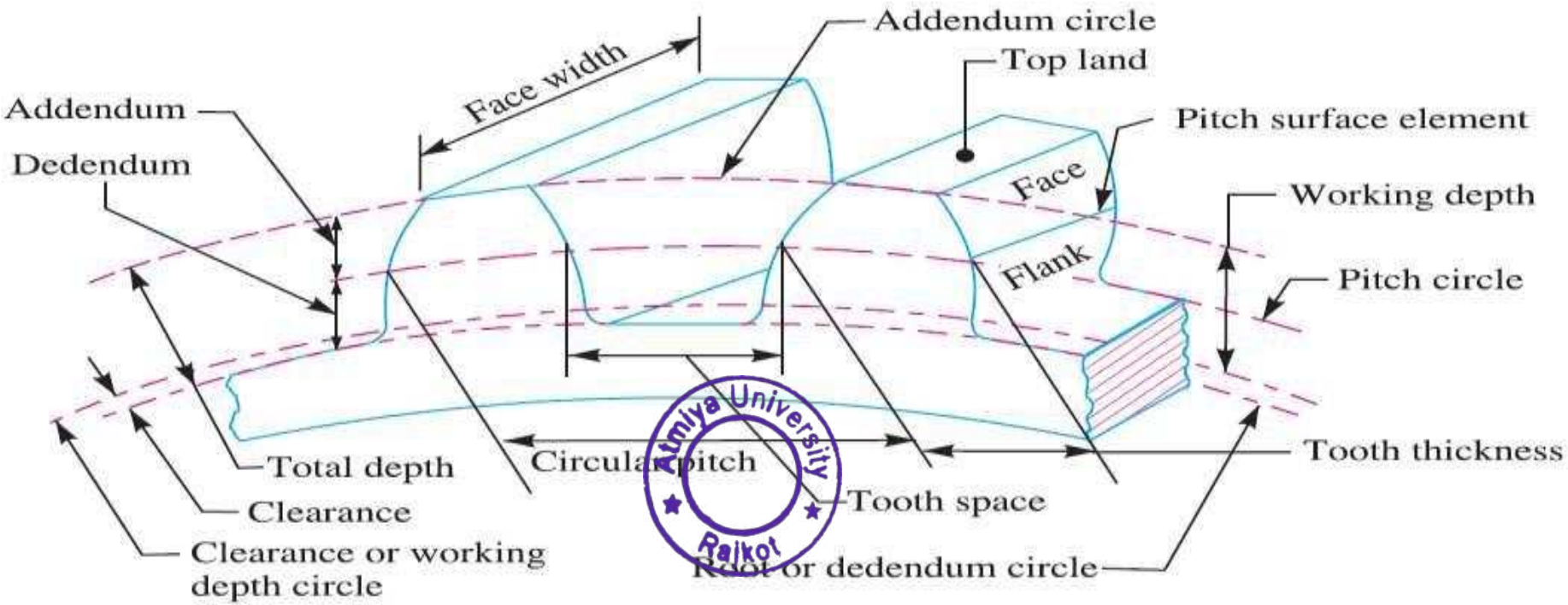

Atmiya University Rajkot

Terminology: Terms used in Gears

10. Circular pitch. It is the distance measured on the circumference of the pitch circle from a point of one tooth to the corresponding point on the next tooth. It is usually denoted by p_c.

Mathematically, Circular pitch, $p_c = \pi D/T$

where D = Diameter of the pitch circle, and

T = Number of teeth on the wheel.

A little consideration will show that the two gears will mesh together correctly, if the two wheels have the same circular pitch.

$$p_c = \frac{\pi D_1}{T_1} = \frac{\pi D_2}{T_2} \quad \text{or} \quad \frac{D_1}{D_2} = \frac{T_1}{T_2}$$

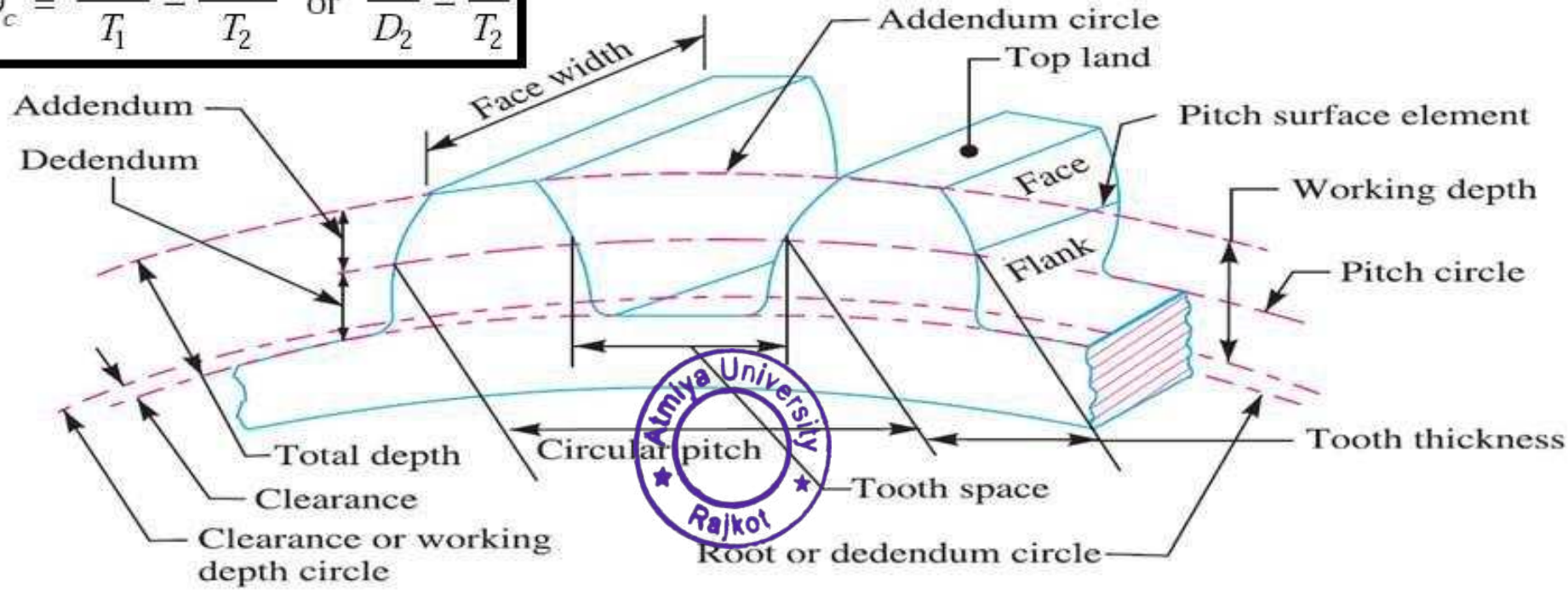

Atmiya University Rajkot

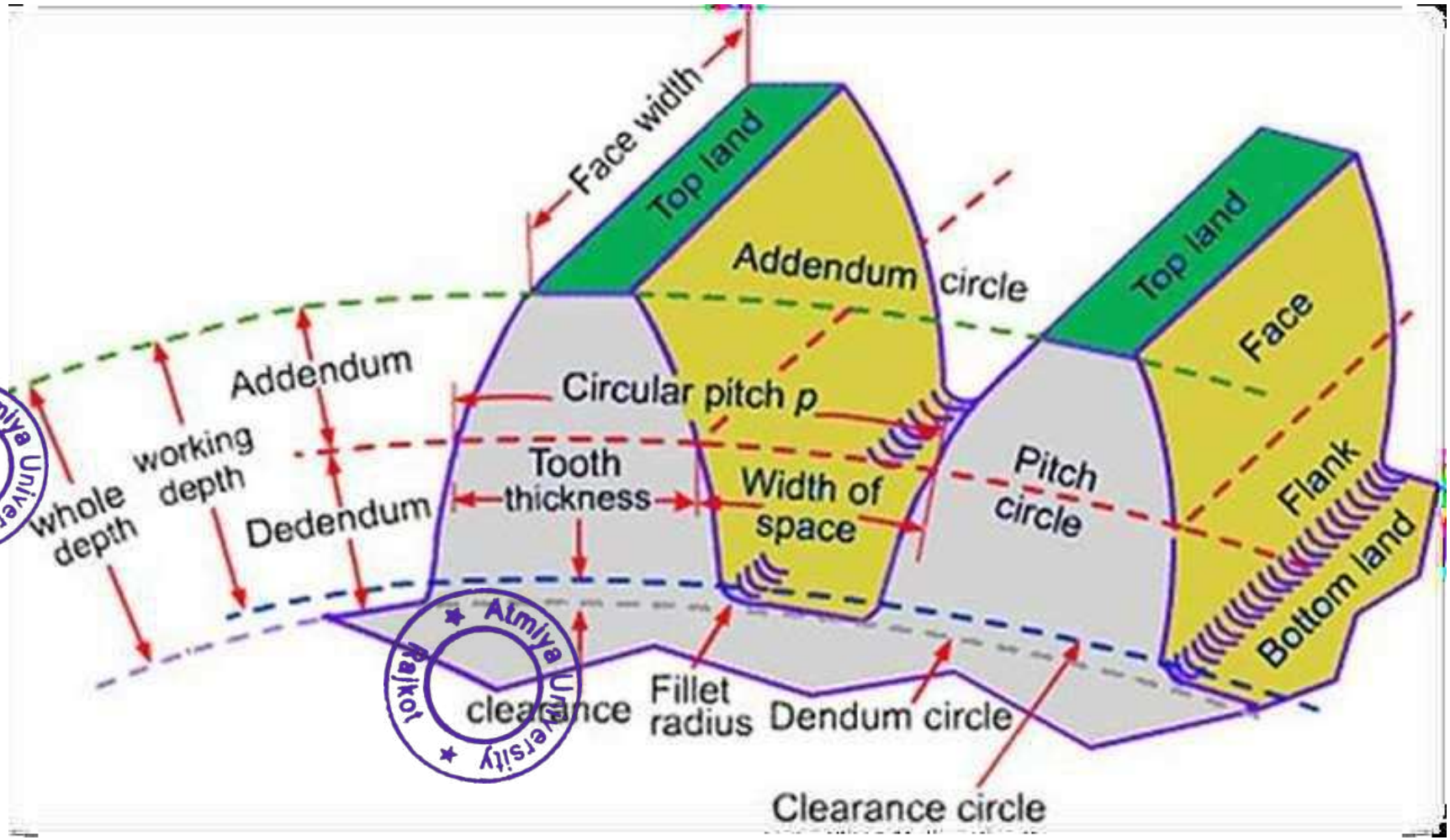

Atmiya University Rajkot
Atmiya University Rajkot

11. *Diametral pitch.* It is the ratio of number of teeth to the pitch circle diameter in millimetres. It denoted by p_d. Mathematically,

$$\text{Diametral pitch,} \quad p_d = \frac{T}{D} = \frac{\pi}{p_c} \qquad \left(\because p_c = \frac{\pi D}{T}\right)$$

where T = Number of teeth, and

D = Pitch circle diameter.

12. *Module.* It is the ratio of the pitch circle diameter in millimetres to the number of teeth. It is usually denoted by m. Mathematically,

$$\text{Module,} \quad m = D / T$$

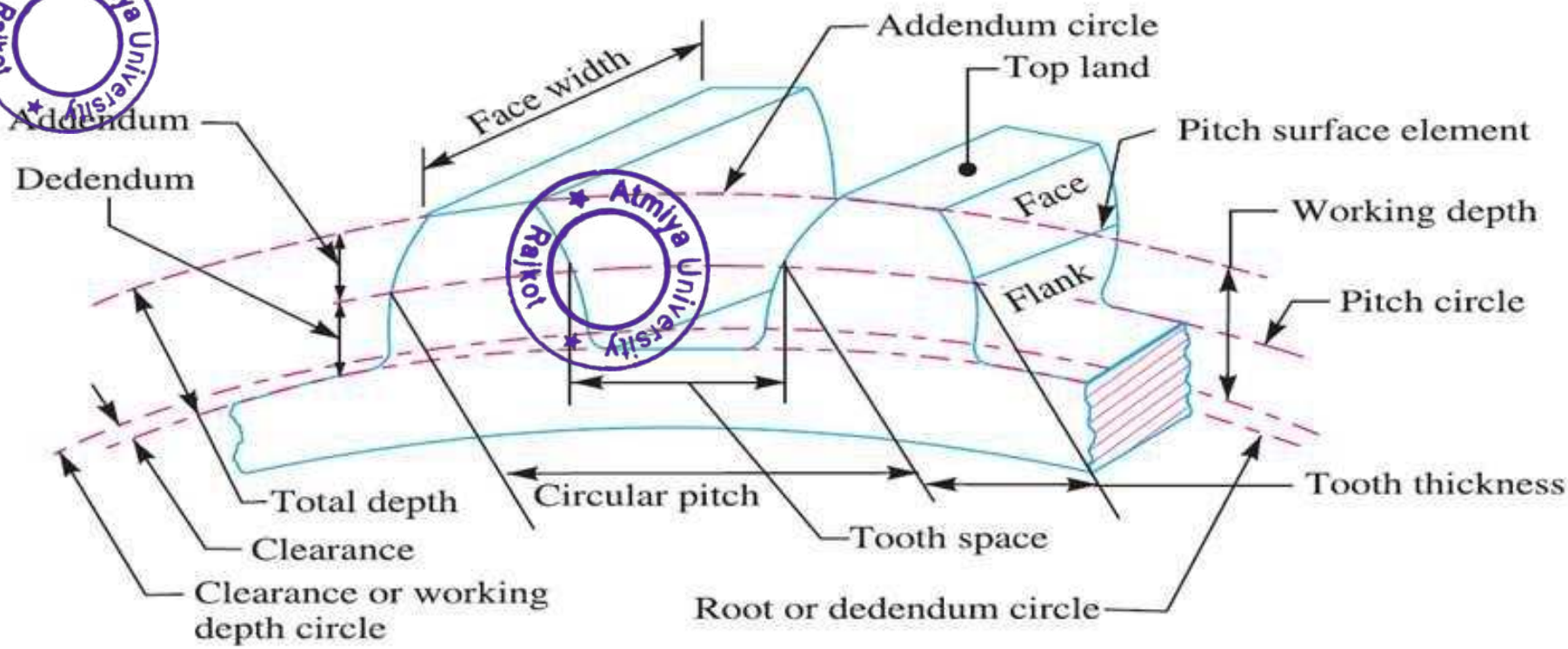

Atmiya University Rajkot

13. *Clearance.* It is the radial distance from the top of the tooth to the bottom of the tooth, in a meshing gear. A circle passing through the top of the meshing gear is known as ***clearance circle.***

14. *Total depth.* It is the radial distance between the addendum and the dedendum circle of a gear. It is equal to the sum of the addendum and dedendum.

15. *Working depth.* It is radial distance from the addendum circle to the clearance circle. It is equal to the sum of the addendum of the two meshing gears.

16. *Tooth thickness.* It is the width of the tooth measured along the pitch circle.

17. *Tooth space.* It is the width of space between the two adjacent teeth measured along the pitch circle.

18. *Backlash.* It is the difference between the tooth space and the tooth thickness, as measured on the pitch circle.

Atmiya University Rajkot

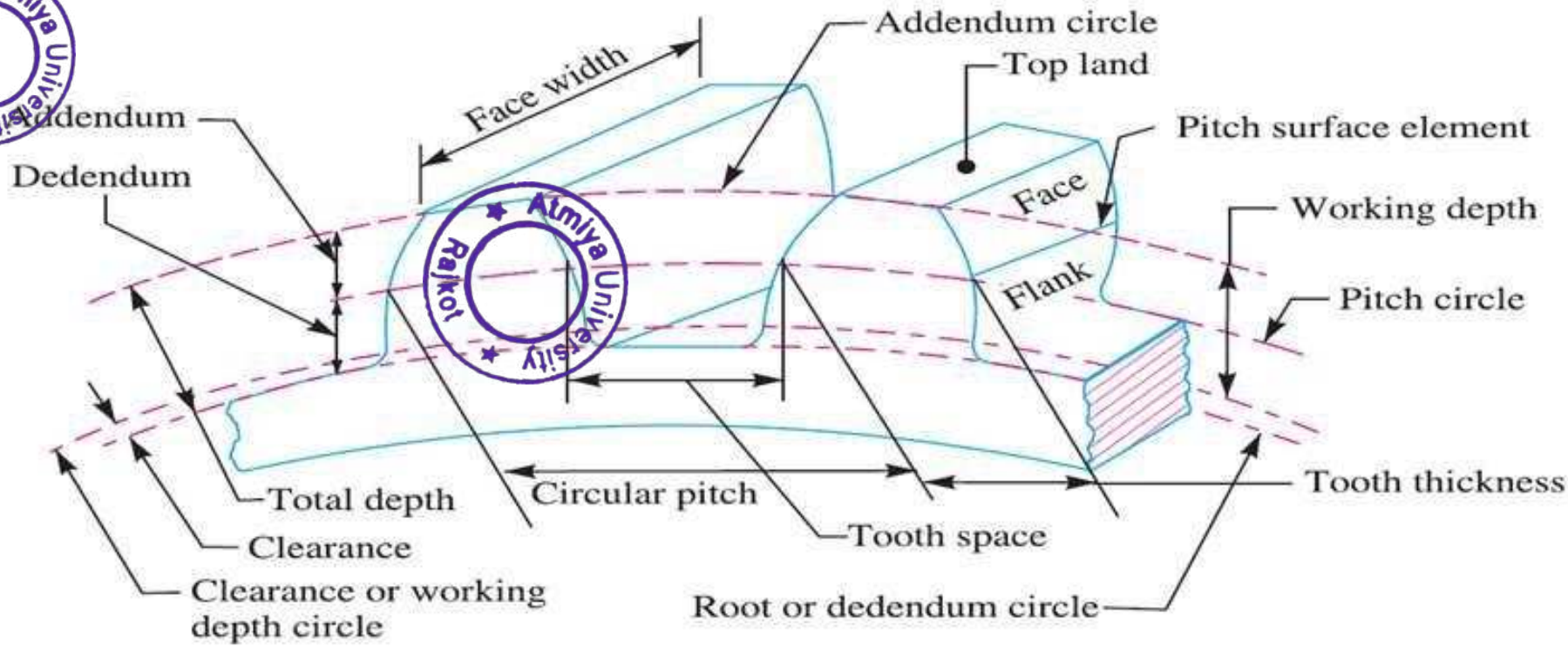

19. ***Face of the tooth.*** It is surface of the tooth above the pitch surface.

20. ***Top land.*** It is the surface of the top of the tooth.

21. ***Flank of the tooth.*** It is the surface of the tooth below the pitch surface.

22. ***Face width.*** It is the width of the gear tooth measured parallel to its axis.

23. ***Profile.*** It is the curve formed by the face and flank of the tooth.

24. ***Fillet radius.*** It is the radius that connects the root circle to the profile of the tooth.

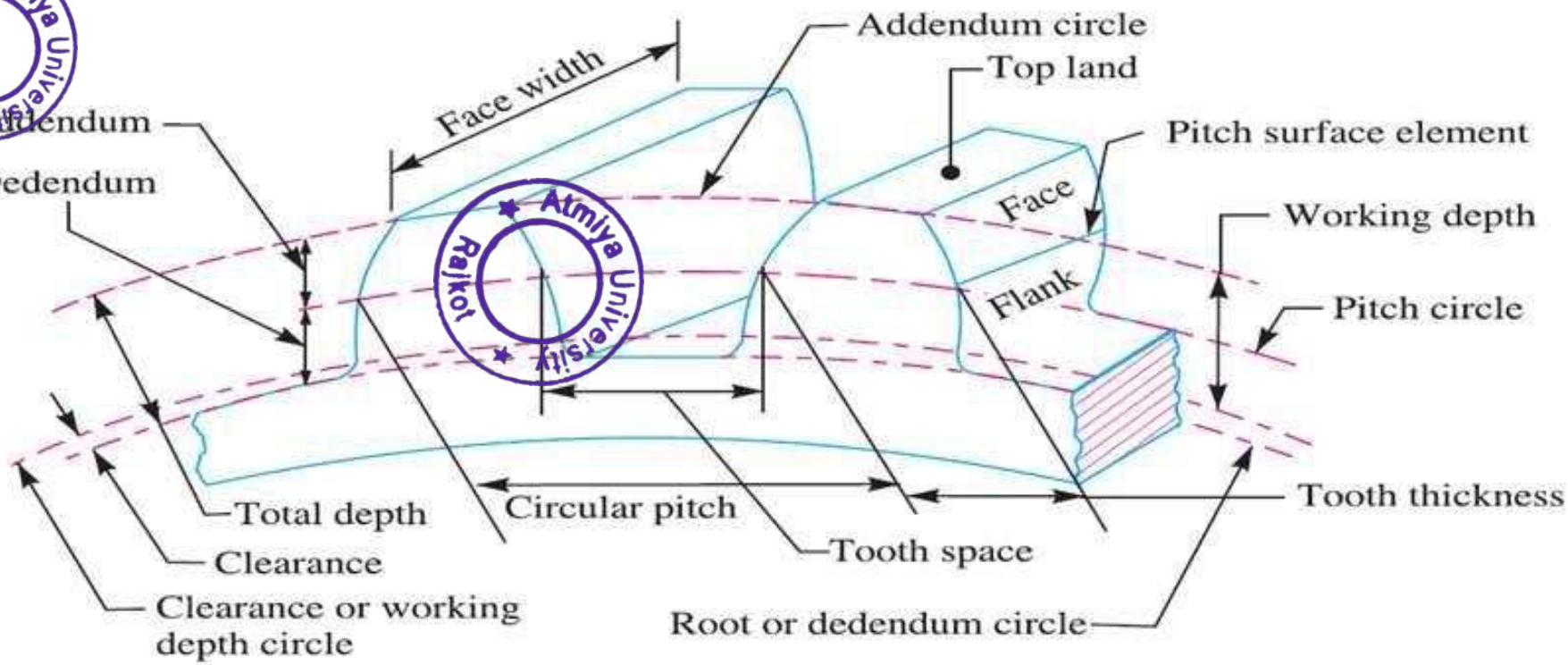

Atmiya University Rajkot

$$Gear\ ratio = G = \frac{Z_G}{Z_P} = \frac{D_{PG}}{D_{PP}} = \frac{N_P}{N_G}$$

$$\text{Center distance} = a = \frac{D_{pp} + D_{pg}}{2}$$

$$= \frac{N_p + N_g}{2 \times P_d}$$

Where

D_{pp}= pitch diameter of pinion

N_p= number of teeth on the pinion

D_{pg}= pitch diameter of gear

Atmiya University Rajkot

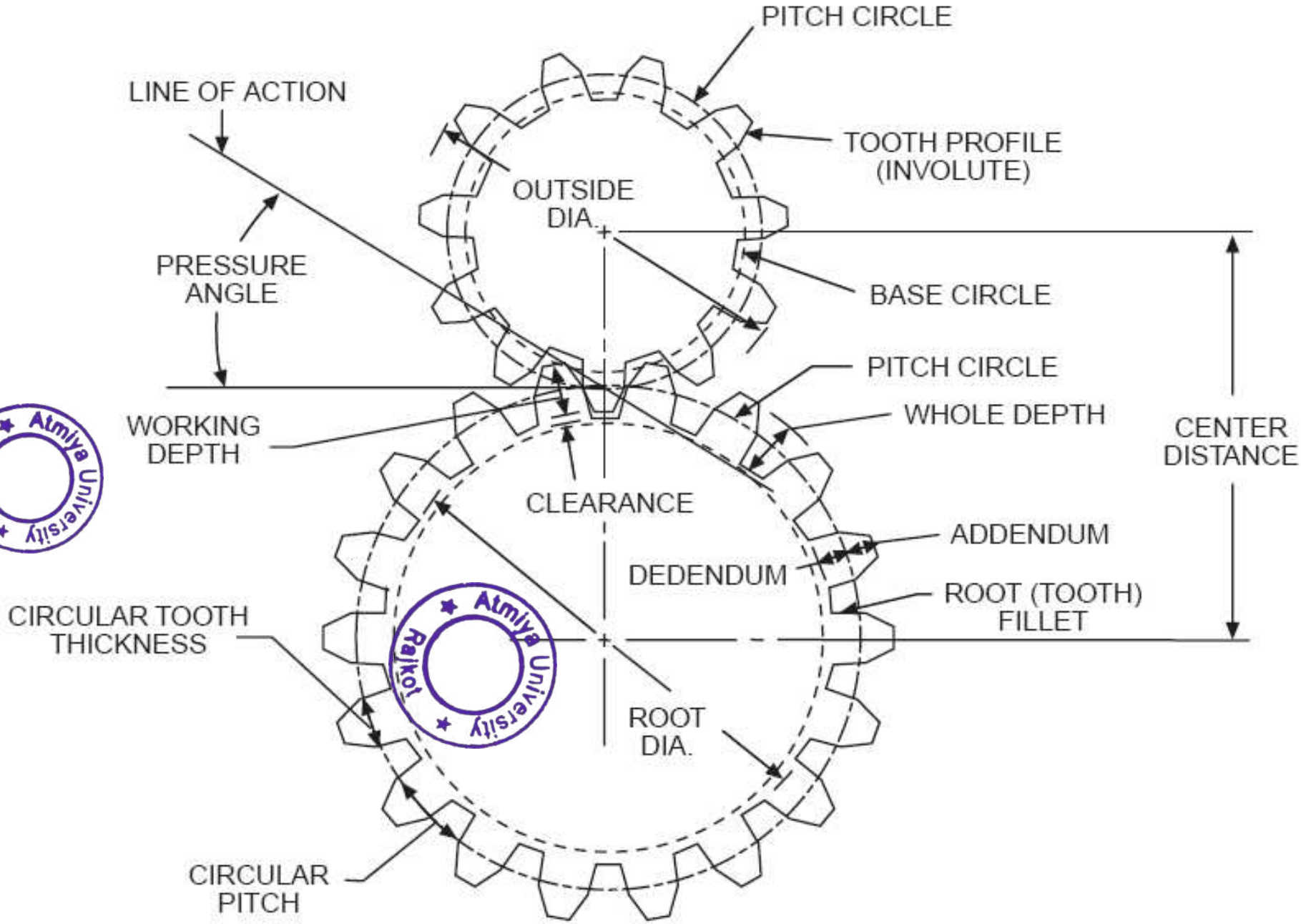

Atmiya University Rajkot

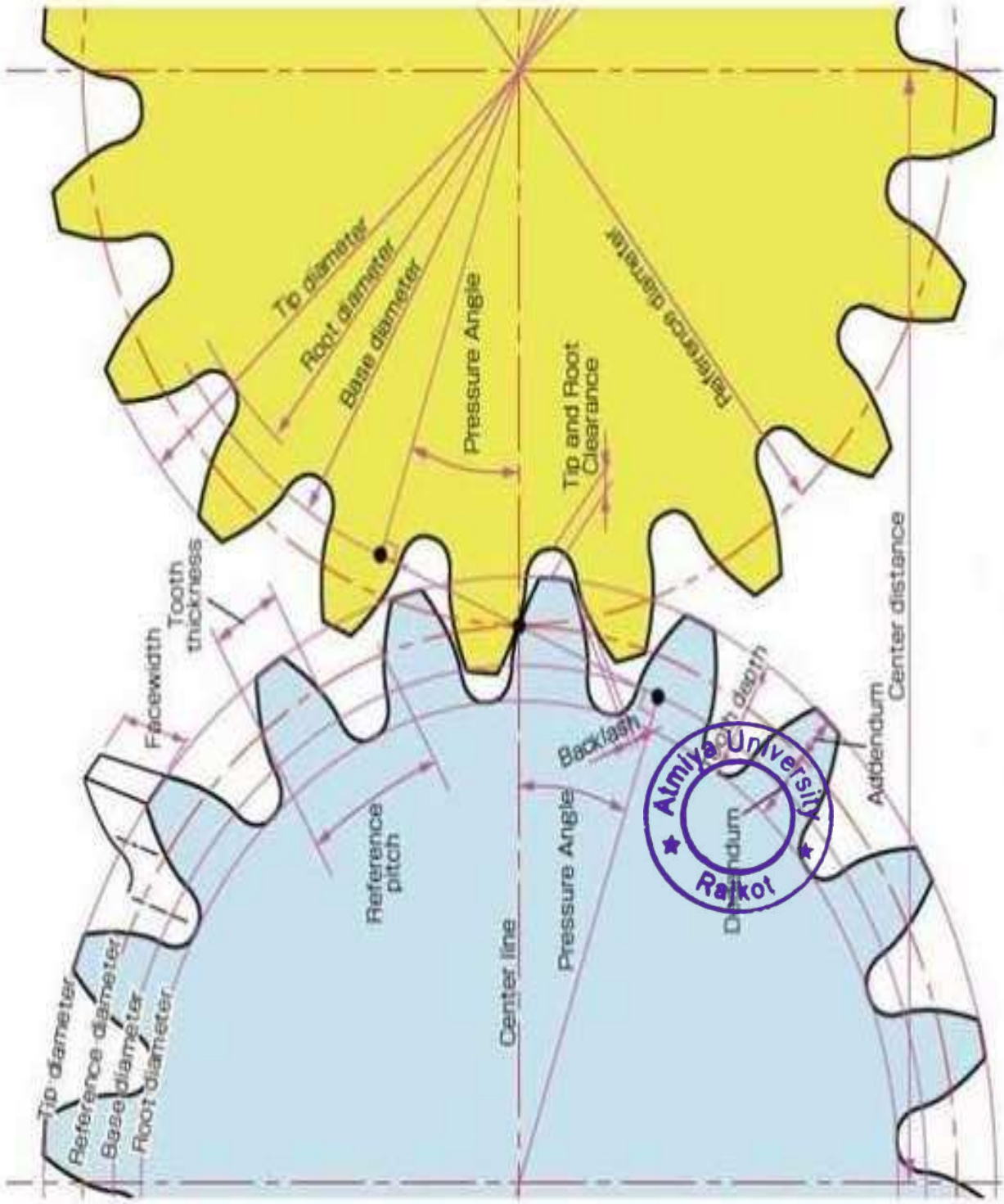

Atmiya University
Rajkot

Backlash, Interference and Undercutting

Backlash:- The width of a tooth space exceeds the thickness of engaging tooth

Interference and Undercutting:-

- Mating teeth will interfere with each other if contact is made where either of the two surfaces are not involute in shape
- Interference can be eliminated by machining a concave surfaces into the flank areas which is sufficient to avoid contact in these areas
- This process is called undercutting which actually weakens the tooth at areas close to the point of maximum bending moment

Atmiya University Rajkot

Backlash

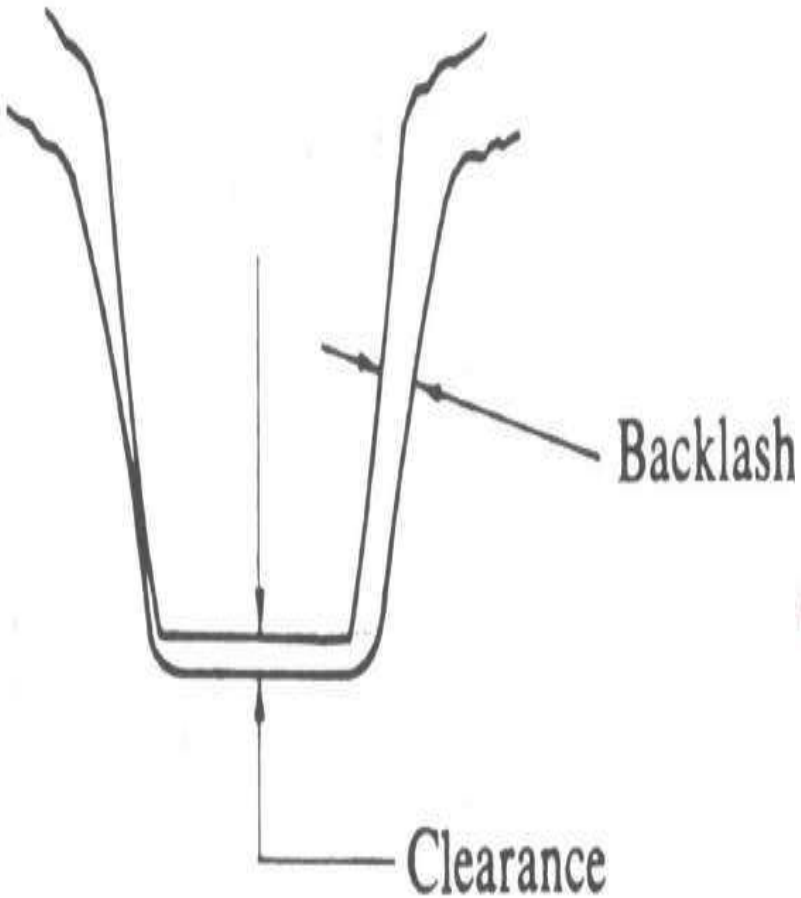

Interference and Undercutting

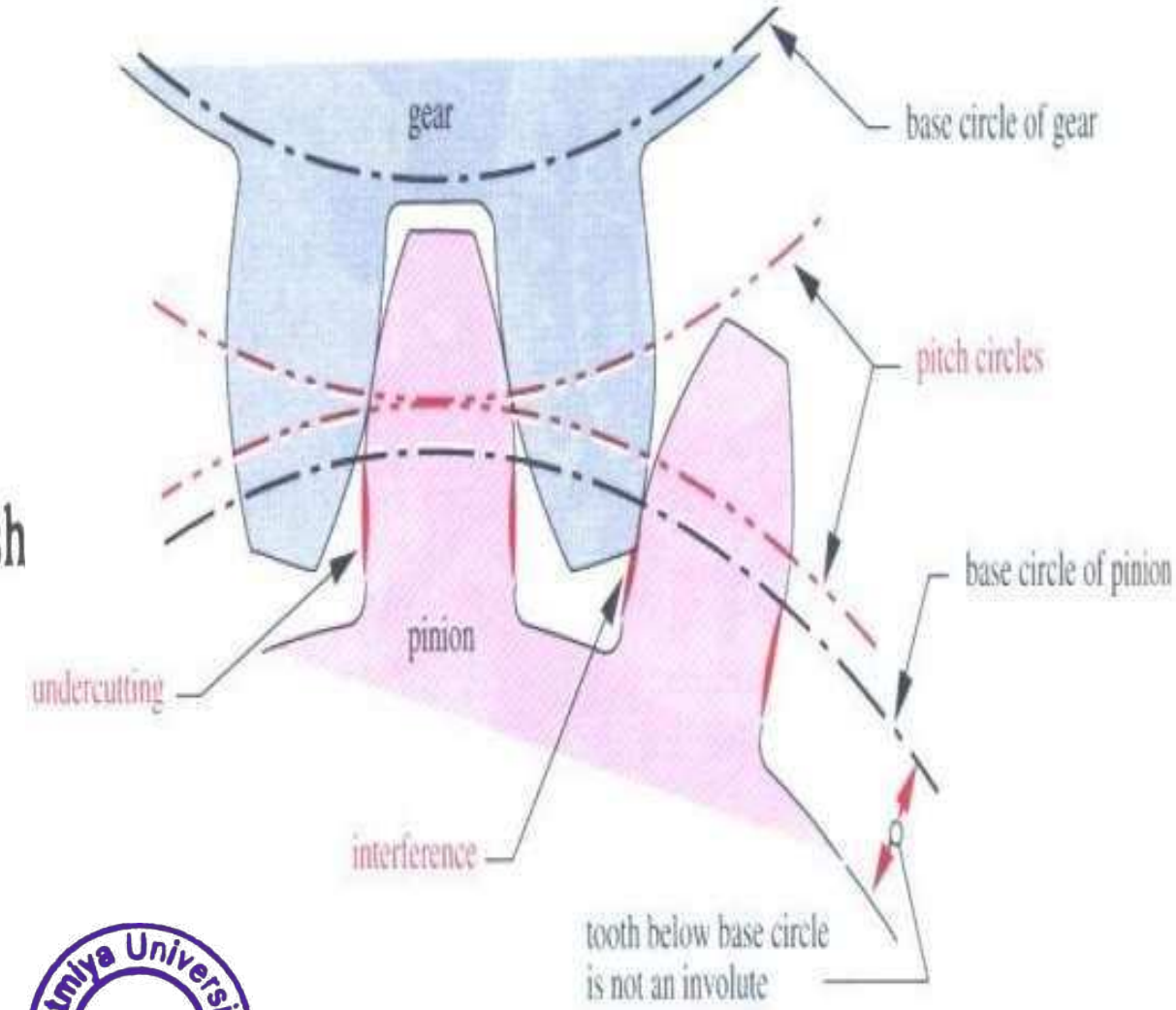

Atmiya University
Rajkot

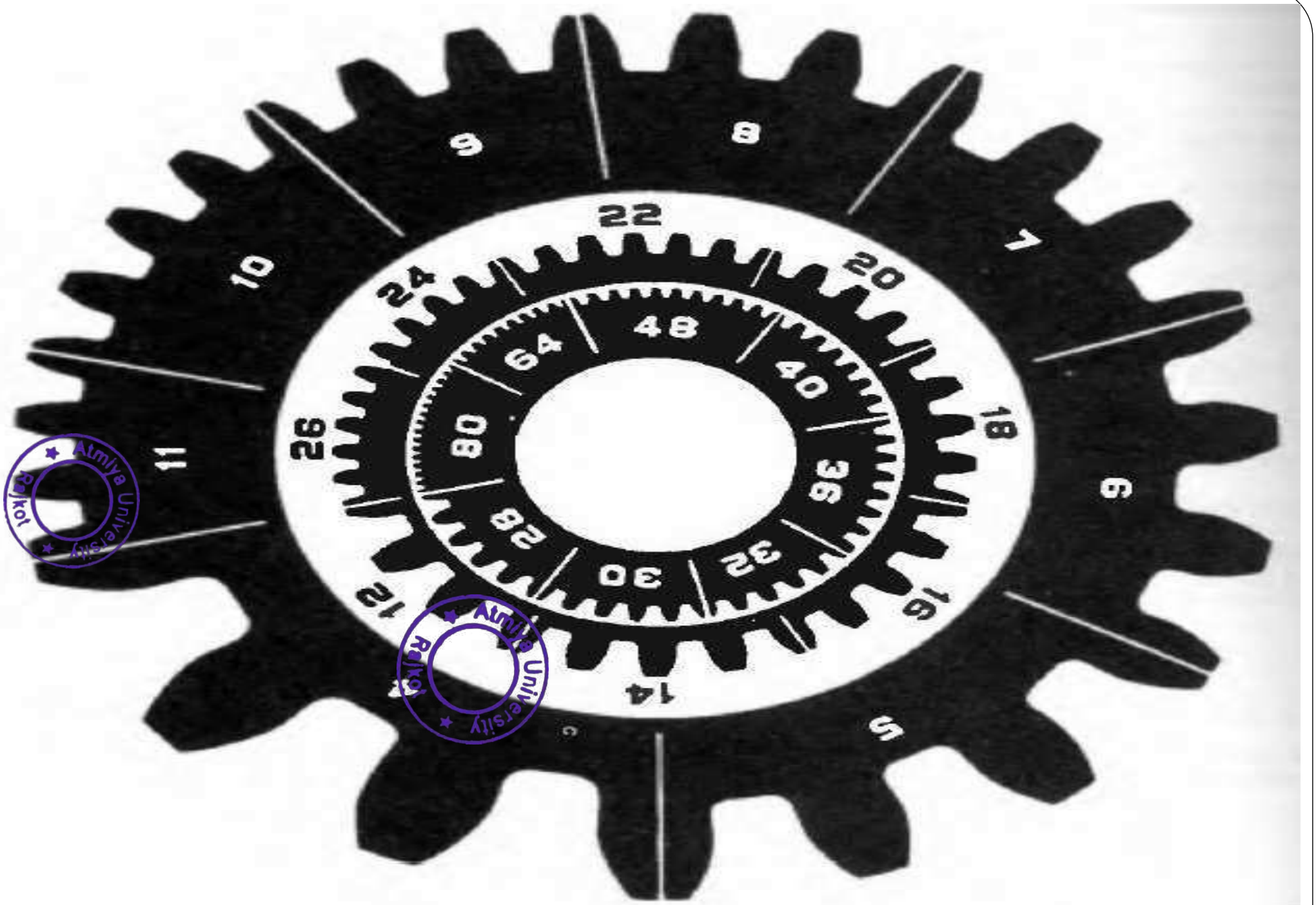

Actual Gear Tooth Sizes for Various Diametral Pitches

Atmiya University Rajkot
Atmiya University Rajkot

Law of Gearing

The fundamental law of gearing states ‘The common normal to the tooth profile at the point of contact should always pass through a fixed point, called the pitch point, in order to obtain a constant velocity ratio’.

Referring to Fig. *O*1 *and O*2

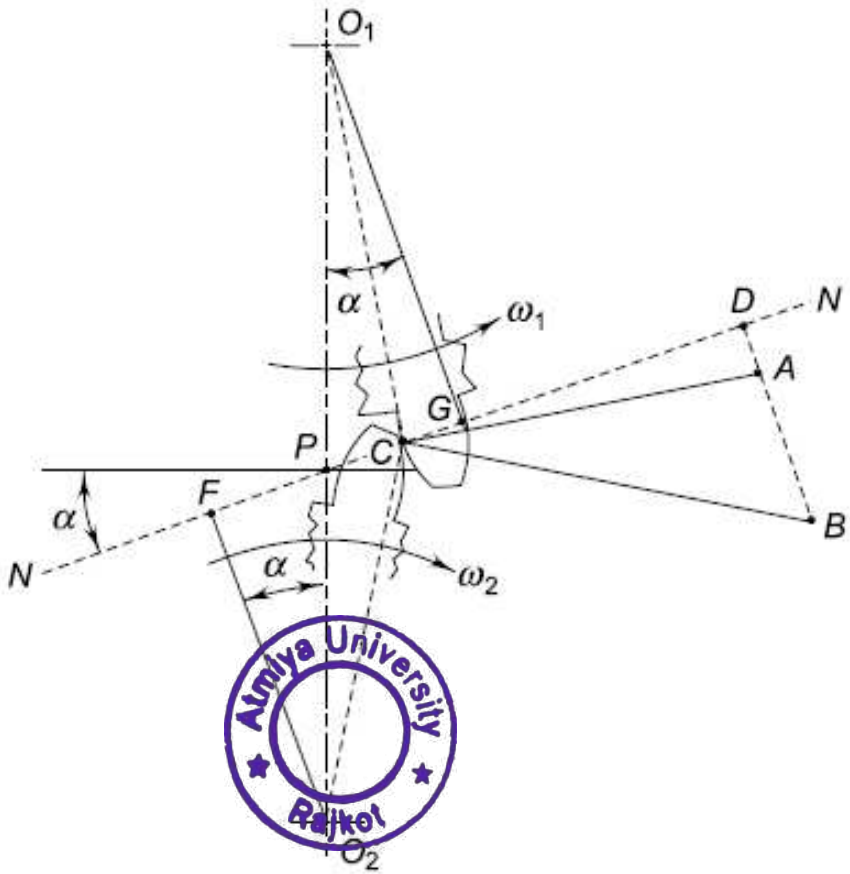

Atmiya University Rajkot

are centres of the two gears rotating with angular velocities ω_1 and ω_2 respectively. C is the point of contact between the teeth of the two gears and NN is the common normal at the point of contact.

$\overrightarrow{CA}$ is the velocity of the point C, when it is considered on the gear 1, while $\overrightarrow{CB}$ is the velocity of the point C, when it is considered on the gear 2. Also,

$$CA \perp O_1C \quad \text{and} \quad CB \perp O_2C$$

The projections of the two vectors $\overrightarrow{CA}$ and $\overrightarrow{CB}$, i.e., $\overrightarrow{CD}$, along the common normal NN must be equal, otherwise the teeth will not remain in contact and there will be a slip.

Atmiya University Rajkot

$$CA = \omega_1 \times O_1C$$
$$CB = \omega_2 \times O_2C$$

$$\frac{\omega_1}{\omega_2} = \frac{O_2C}{O_1C} \times \frac{CA}{CB} \qquad \text{(a)}$$

Since ΔO_1CG and ΔCAD are similar, hence

Atmiya University Rajkot

$$\frac{O_1C}{CA} = \frac{O_1G}{CD} \qquad \text{(b)}$$

Similarly, ΔO_2FC and ΔCDB are similar, and thus

$$\frac{O_2C}{CB} = \frac{O_2F}{CD} \qquad \text{(c)}$$

From (b) and (c),

$$\frac{CA}{CB} = \frac{O_1C}{O_2C} \times \frac{O_2F}{O_1G} \qquad \text{(d)}$$

From (b) and (c),

$$\frac{CA}{CB} = \frac{O_1C}{O_2C} \times \frac{O_2F}{O_1G} \qquad \text{(d)}$$

From (a) and (d),

$$\frac{\omega_1}{\omega_2} = \frac{O_2F}{O_1G} \qquad \text{(e)}$$

Similarly, ΔO_2FP and ΔO_1GP are similar, therefore,

$$\frac{O_2F}{O_1G} = \frac{O_2P}{O_1P} \qquad \text{(f)}$$

From (e) and (f),

$$\frac{\omega_1}{\omega_2} = \frac{O_2P}{O_1P} \qquad \text{(g)}$$

Also,

$$O_1P + O_2P = O_1O_2 = \text{constant} \qquad \text{(h)}$$

Therefore, for a constant velocity ratio (ω_1/ω_2), P should be a fixed point. This point P is called the pitch point.

Atmiya University Rajkot
Atmiya University Rajkot

Involute tooth profile

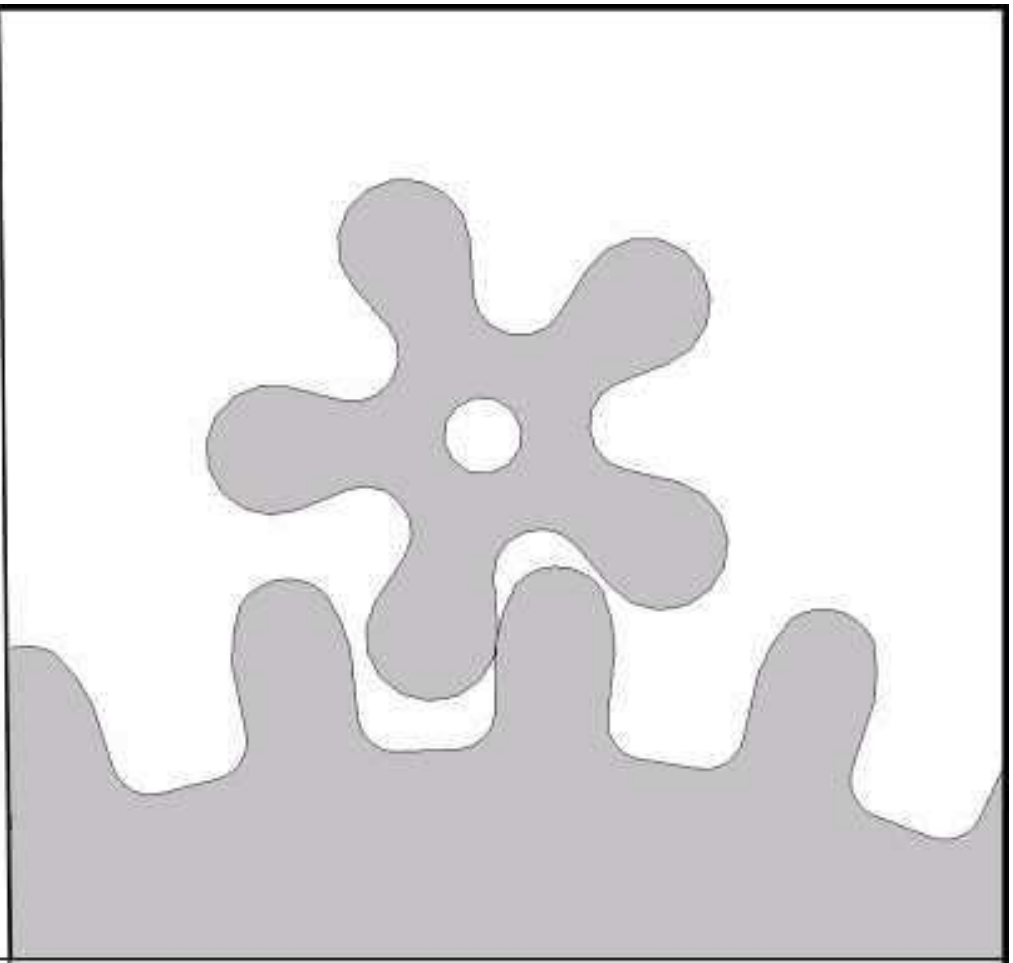

Cycloidal tooth profile

Atmiya University Rajkot
Atmiya University Rajkot

It has been found that only involute and cycloidal curves satisfy the fundamental law of gearing.

The meaning of these curves is as follows:

- An involute is a curve traced by a point on a line as the line rolls without slipping on a circle.
- A cycloid is a curve traced by a point on the circumference of a generating circle as it rolls without slipping along the inside and outside of another circle.
- The cycloid profile consists of two curves, namely, epicycloid and hypocycloid.
- An *epicycloid is a curve* traced by a point on the circumference of a generating circle as it rolls without slipping on the outside of the pitch circle.
- A *hypocycloid is a curve traced by a point on* the circumference of a generating circle as it rolls without slipping on the inside of the pitch circle.

Atmiya University Rajkot

INVOLUTE OF A CIRCLE

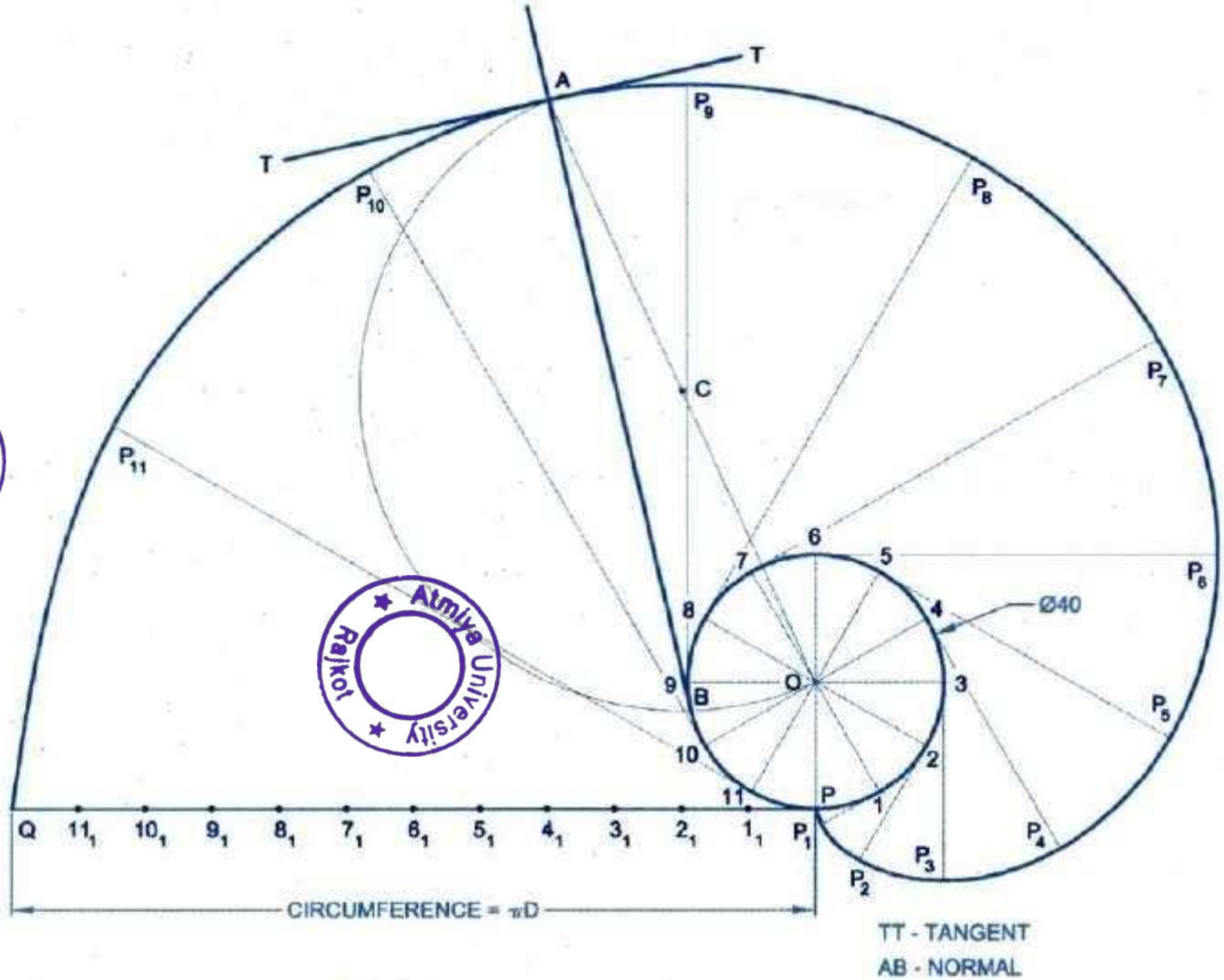

Atmiya University Rajkot
Atmiya University Rajkot

Atmiya University
Rajkot

Atmiya University
Rajkot

EPICYCLOID

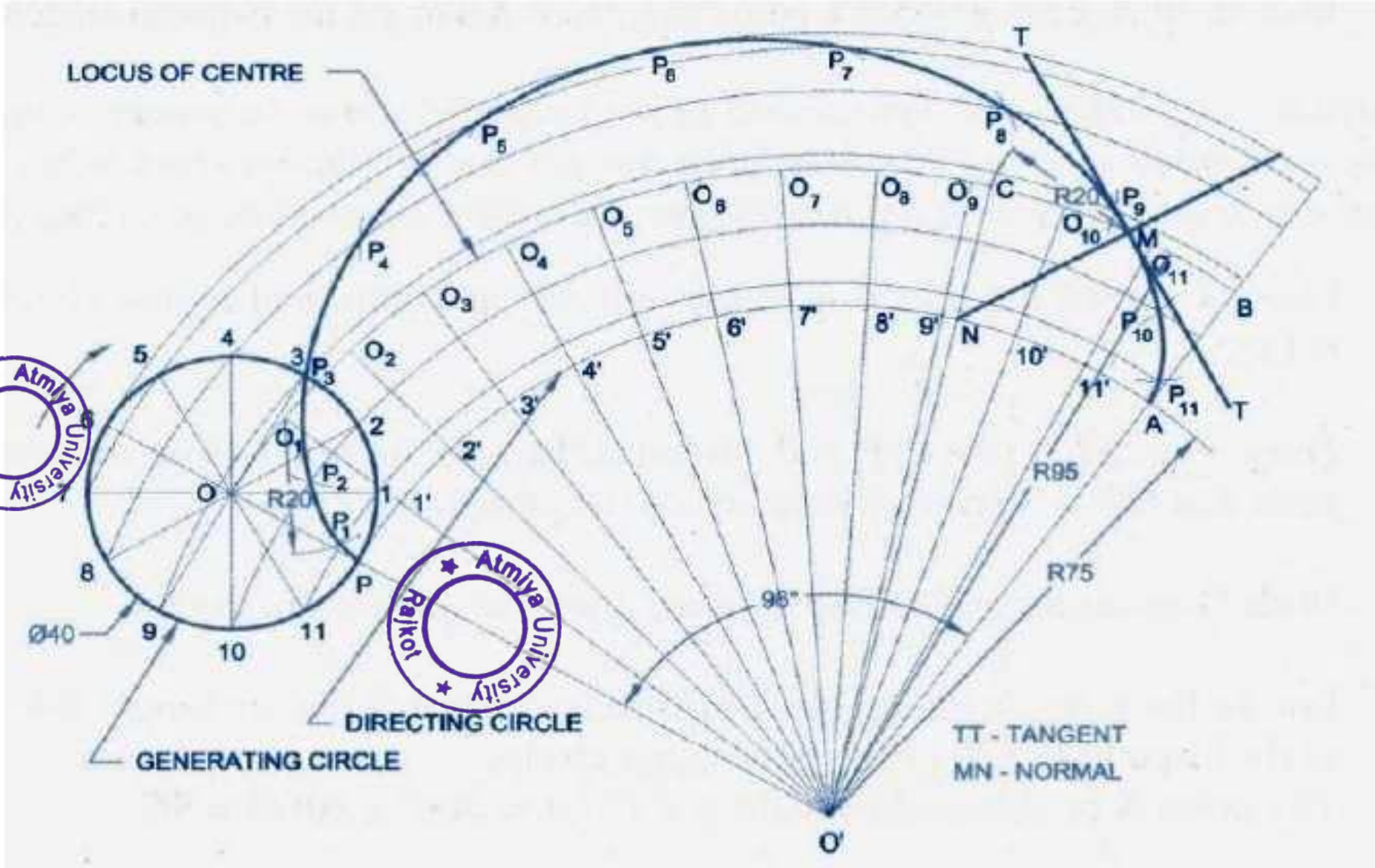
LOCUS OF CENTRE
DIRECTING CIRCLE
GENERATING CIRCLE
TT - TANGENT
MN - NORMAL
R20
R95
R75
Ø40
95°
O'
O
T
T
M
N
A
B
C
P
Atmiya University Rajkot
Atmiya University Rajkot

HYPOCYCLOID

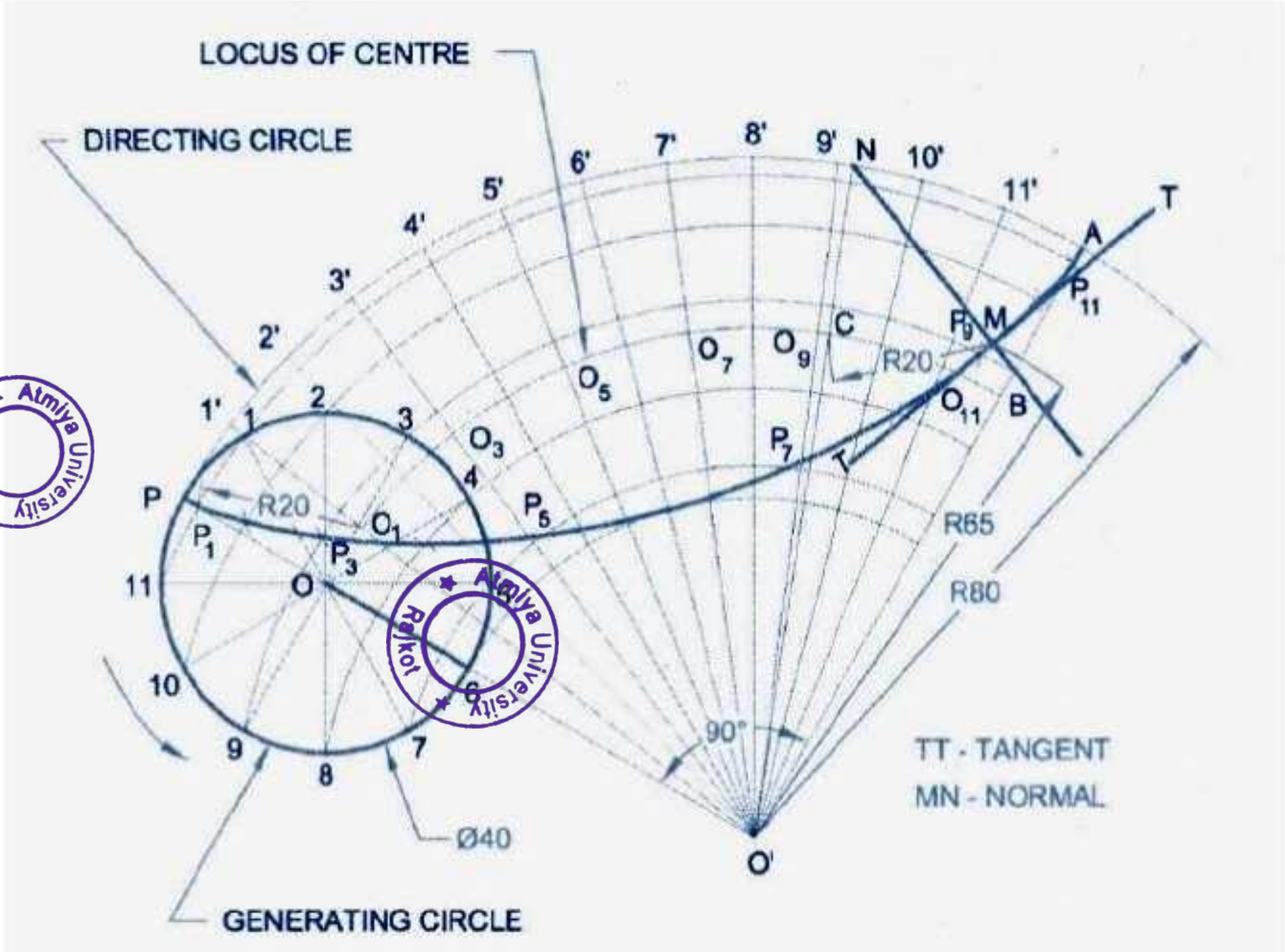

Atmiya University Rajkot

Involute	Cycloidal
➢ Pressure angle remains same throughout the operation, So smooth running and less wear	➢ Pressure angle keeps on changing during the operation. The angle is maximum at the start and end of engagement. It is zero at pitch point. So Less smooth running
➢ Teeth are weaker	➢ Since cycloidal teeth have wider flanks, teeth are stronger
➢ It is easier to manufacture due to single profile is required.	➢ It is difficult to manufacture due to requirement of hypocycloid for flank and epicycloids for face.
➢ The velocity is not affected due to variation in centre distance	➢ The centre distance should remain the same
➢ Interference takes place	➢ There is no interference

Atmiya University Rajkot

Minimum no of teeth to avoid interference

$$z_{min.} = \frac{2}{\sin^2 \alpha}$$

Pressure angle (α)	14.5°	20°	25°
$z_{min.}$ (theoretical)	32	17	11
$z_{min.}$ (practical)	27	14	9

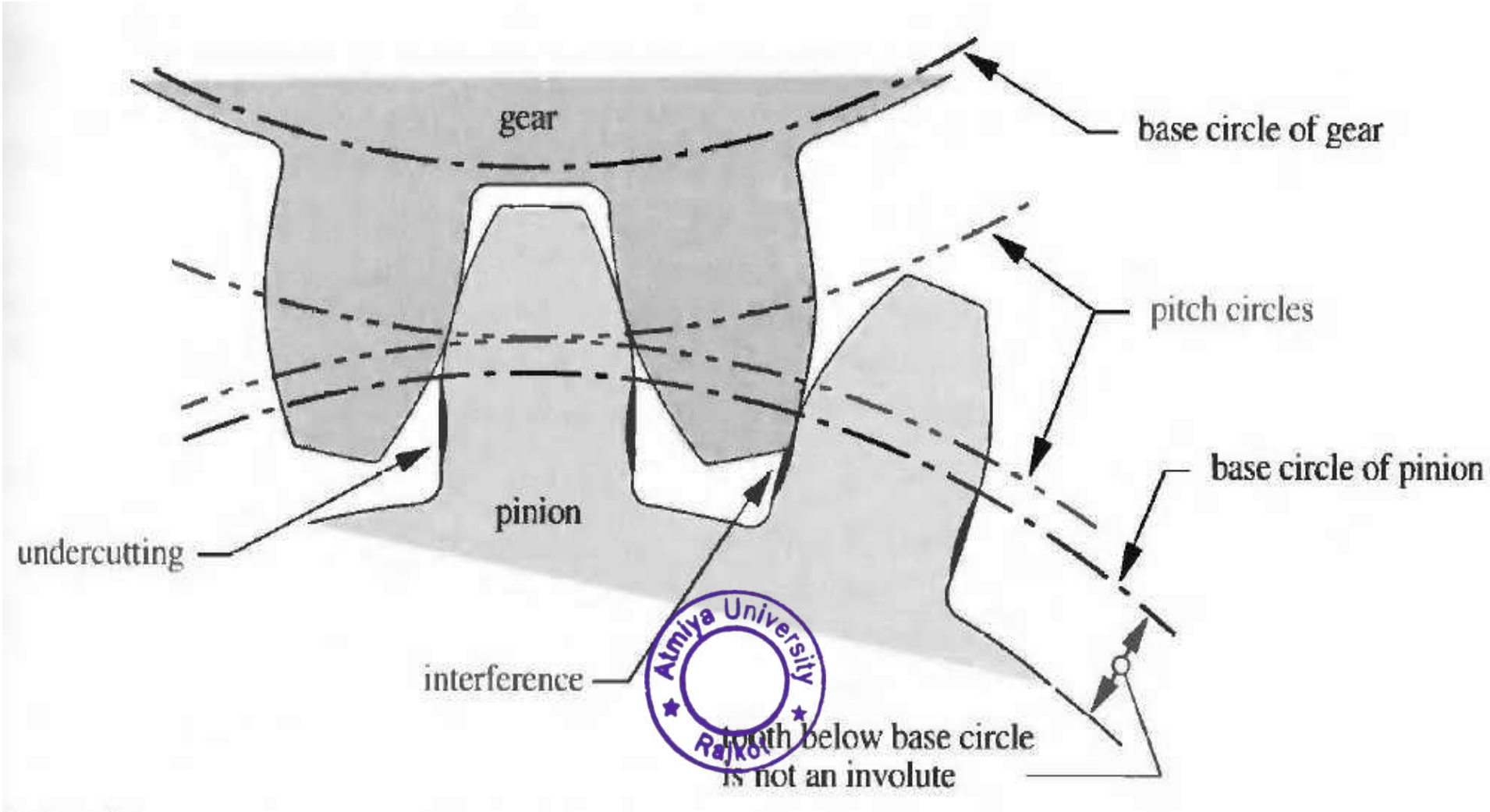

Atmiya University Rajkot

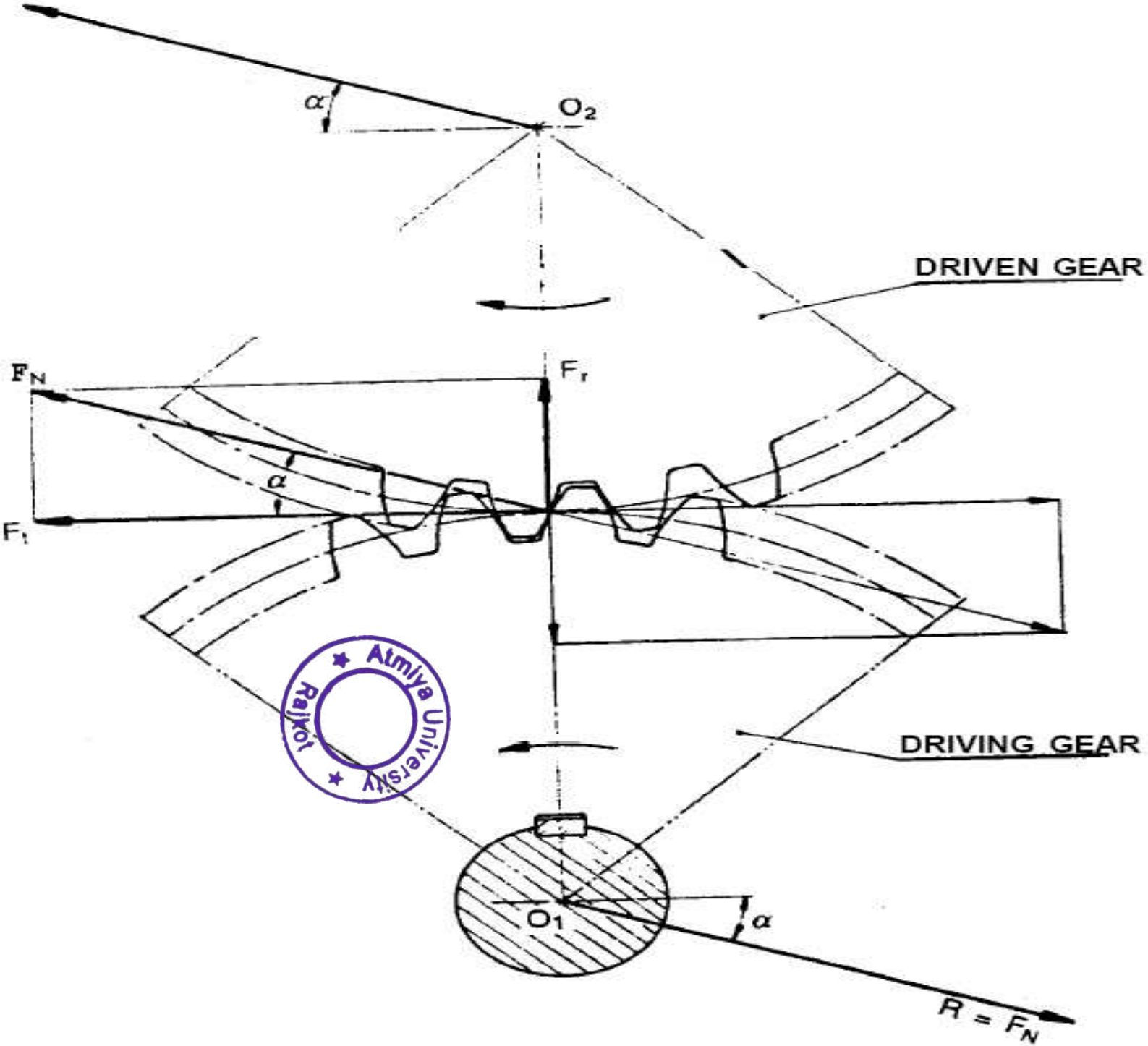

Atmiya University Rajkot
Atmiya University Rajkot

Force analysis

$$\text{Tangential Force} = F_t = \frac{P}{V} = \frac{T_p}{d_p/2} = \frac{T_g}{d_g/2}$$

$$\text{Radial Force} = F_r = F_t \times \tan \emptyset$$

$$\text{Resultant Force} = F = \sqrt{{F_t}^2 + {F_r}^2} = \frac{F_t}{\cos \emptyset}$$

P= Power transmitted

$$V = \text{Pitch line velocity} = \frac{\pi \times d_p \times n_p}{60 \times 1000} = \frac{\pi \times d_g \times n_g}{60 \times 1000}$$

T=Torque transmitted

Atmiya University Rajkot

- **Advantages of smaller pressure angle**

1. Low radial force (effect on shaft)
2. High contact ratio (low noise operation)

- **Limitations of Larger pressure angle**

1. Large radial force (effect on shaft)
2. Low contact ratio (high noise operation)

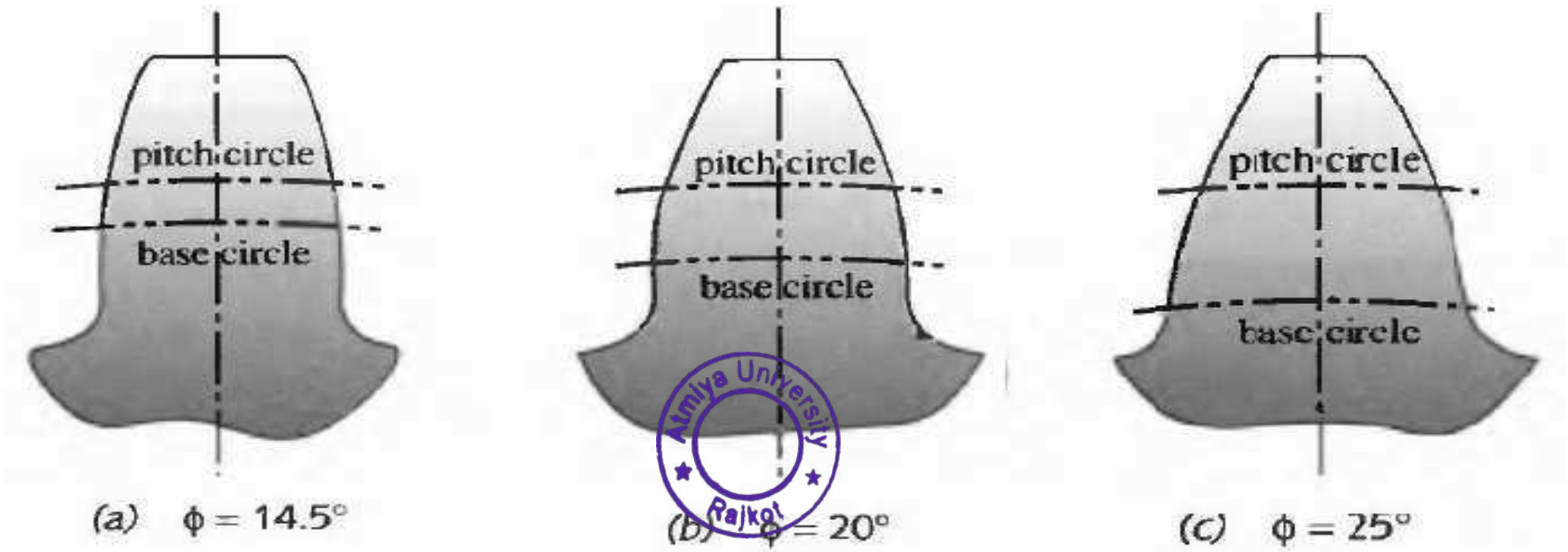

Atmiya University Rajkot

- **Advantages of larger pressure angle**

1. Lesser no of teeth required to avoid interference
2. Low bending stresses due to large tooth thickness at the base
3. Low contact stresses due to larger radius of curvature

- **Limitations of smaller pressure angle**

1. Relatively large no of teeth required to avoid interference
2. High bending stresses
3. High contact stresses

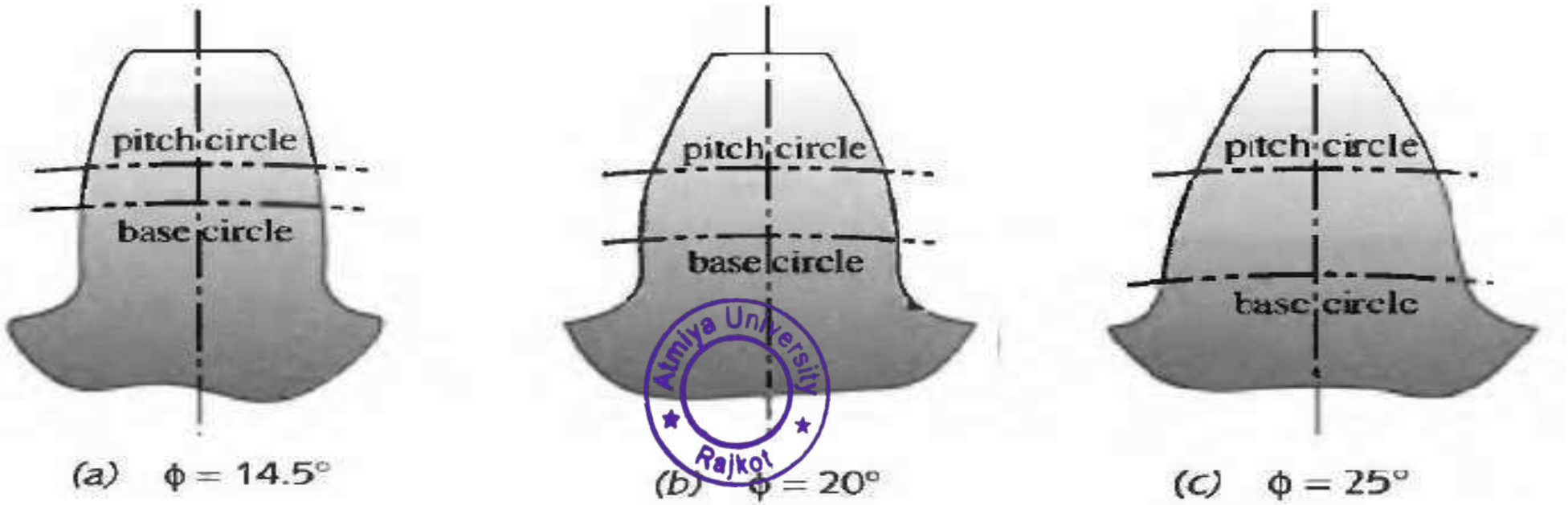

(a) $\phi = 14.5°$ (b) $\phi = 20°$ (c) $\phi = 25°$

Standard System of Gear tooth

- All standard systems prescribe the involute profile for gear tooth.

The reasons are as follows:

- The involute profile satisfies the fundamental law of gearing at any centre distance.
- All involute gears of a given module and pressure angle are completely interchangeable.
- All involute gears of a given module and pressure angle can be machined from one single tool.
- A slight change in the centre distance, which might be caused by incorrect mounting, has no effect upon the shape of the involute. In addition, the pitch point is still fixed and the law of gearing is satisfied. Therefore, the velocity ratio remains constant.

Marwadi University Rajkot

- There are three standard systems for the shape of gear teeth. They are as follows:

(i) 14.5° full depth involute system

(ii) 20° full depth involute systems

(iii) 20° stub involute system

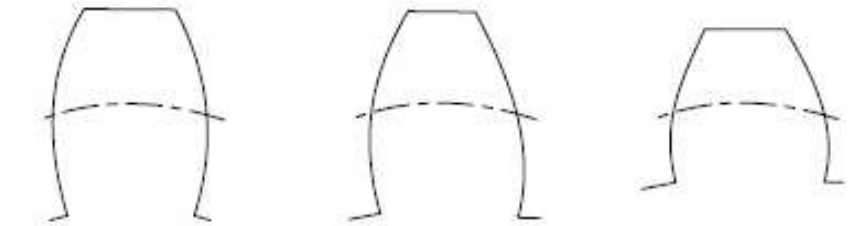

(a) 14.5° full depth (b) 20° full depth (c) 20° stub

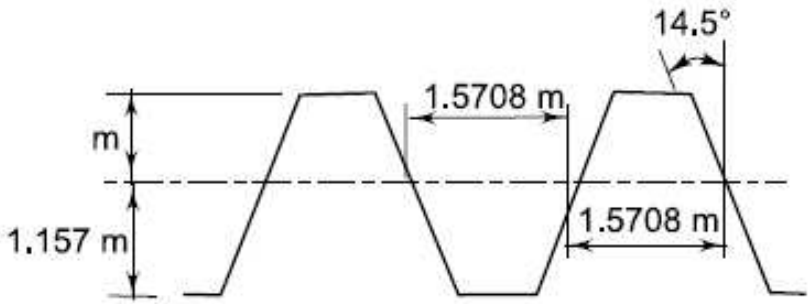

(a) 14.5° full depth involute system

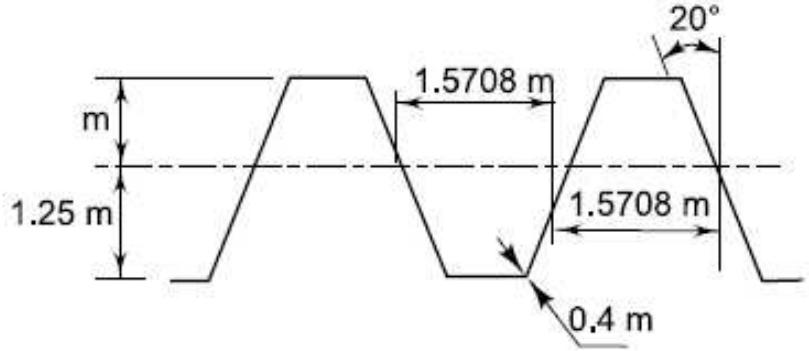

(b) 20° full depth involute system

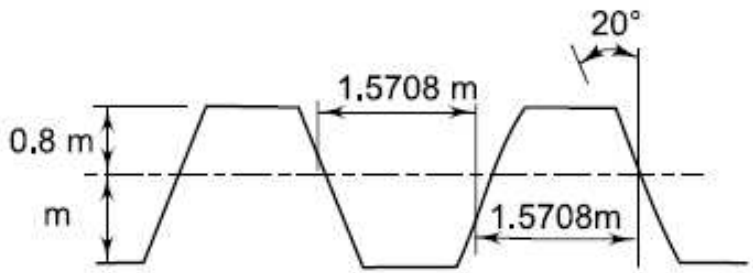

(c) 20° stub tooth involute system

Atmiya University Rajkot

Standard System of Gear tooth

Objective: interchange ability for same pressure angle and module

	14.5° full depth	20° full depth	25° stub
Pressure angle	14.5	20	20
Addendum	m	m	0.8 m
Dedendum	1.157 m	1.25 m	m
Clearance	0.157 m	0.25 m	0.2 m
Working depth	2 m	2 m	1.6 m
Whole depth	2.157 m	2.25 m	1.8m
Tooth thickness	1.5708 m	1.5708 m	1.5708 m

Atmiya University Rajkot

(i) 14.5° Full Depth Involute system

- The basic rack for this system is composed of straight sides ***except*** for the fillet arcs.
- In this system, interference occurs when the number of teeth on the pinion is less than 23.
- This system is satisfactory when the number of teeth on the gears is large.
- If the number of teeth is small and if the gears are made by generating process, undercutting is unavoidable.

(ii) 20° Full Depth Involute System

- The basic rack for this system is also composed of straight sides except for the fillet arcs.
- In this system, interference occurs when the number of teeth on the pinion is less than 17.
- The 20° pressure angle system with full depth involute teeth is widely used in practice.
- It is also recommended and adopted by the Bureau of Indian Standards.

Atmiya University Rajkot

- Increasing pressure angle improves the tooth strength but shortens the duration of contact.
- Decreasing pressure angle requires more number of teeth on the pinion to avoid undercutting.
- The 20° pressure angle is a good compromise for most of the power transmission as well as precision gearboxes.
- The 20° pressure angle system has the following advantages over the 14.5° pressure angle system:

(a) It reduces the risk of undercutting.

(b) It reduces interference.

(c) Due to the increased pressure angle, the tooth becomes slightly broader at the root. This makes the tooth stronger and increases the load carrying capacity.

(d) It has greater length of contact.

The main advantage of the 14.5° pressure angle system is its quietness of operation.

Atmiya University Rajkot

(iii) 20° Stub Involute System

- The gears in this system have shorter addendum and shorter dedendum.
- The interfering portion of the tooth, that is, a part of the addendum, is thus removed. Therefore, these teeth have still smaller interference. This also, reduces the undercutting.
- In this system, the minimum number of teeth on the pinion, to avoid interference, is 14.
- Since the pinion is small, the drive becomes more compact. Stub teeth are stronger than full depth teeth because of the smaller moment arm of the bending force.
- Therefore, the stub system transmits very high load. Stub teeth results in lower production cost, as less metal must be cut away.
- The main drawback of this system is that the contact ratio is reduced due to short addendum.
- Due to insufficient overlap, vibrations are likely to occur.

Atmiya University Rajkot

Example

A pair of 20° full depth spur gear consists of a 20 teeth pinion meshing with a 120 teeth gear. The module is 4 mm. Calculate

1. The gear ratio
2. Pitch circle diameter of pinion and gear
3. Centre distance
4. Addendum
5. Dedendum
6. Clearance
7. Working depth
8. Whole depth
9. Tooth thickness

Atmiya University Rajkot

Contact ratio

- A ratio that represents the average number of gear tooth pairs in contact on a pair of meshing gears.
- Greater contact ratio can create smoother operation.
- Generally contact ratio is between 1 to 2
- Mostly used contact ratio is 1.4
- Following methods is used to increase contact ratio

1. Decrease the pressure angle.
2. Increase the number of teeth.
3. Increase working tooth depth.

Atmiya University Rajkot

Addendum Modification

- In standard gears, addendum of gear and pinion are equal.
- Limitation for addendum: “No Undercutting”
- To avoid interference, addendum of gear is reduced by following two ways:

1. Unequal Addenda
2. Equal Addenda (Stub teeth)

Atmiya University Rajkot

1. Unequal Addenda

- The addendum of gear is reduced.
- To maintain, the addendum of pinion is increased.
- Working depth, contact ratio remains unchanged.
- Beam Strength of pinion is decreased.

2. Equal Addenda (Stub teeth)

- The addendum of gear as well as pinion are equally reduced.
- Increases the strength of gear and pinion.
- The teeth of gear and pinion are identical.
- Working depth and contact ratio decreases.

Paniya University Rajkot

Types of Gear tooth failure

Gear failure can occur in various modes. If care is taken during the design stage itself to prevent each of these failure a sound gear design can be evolved.

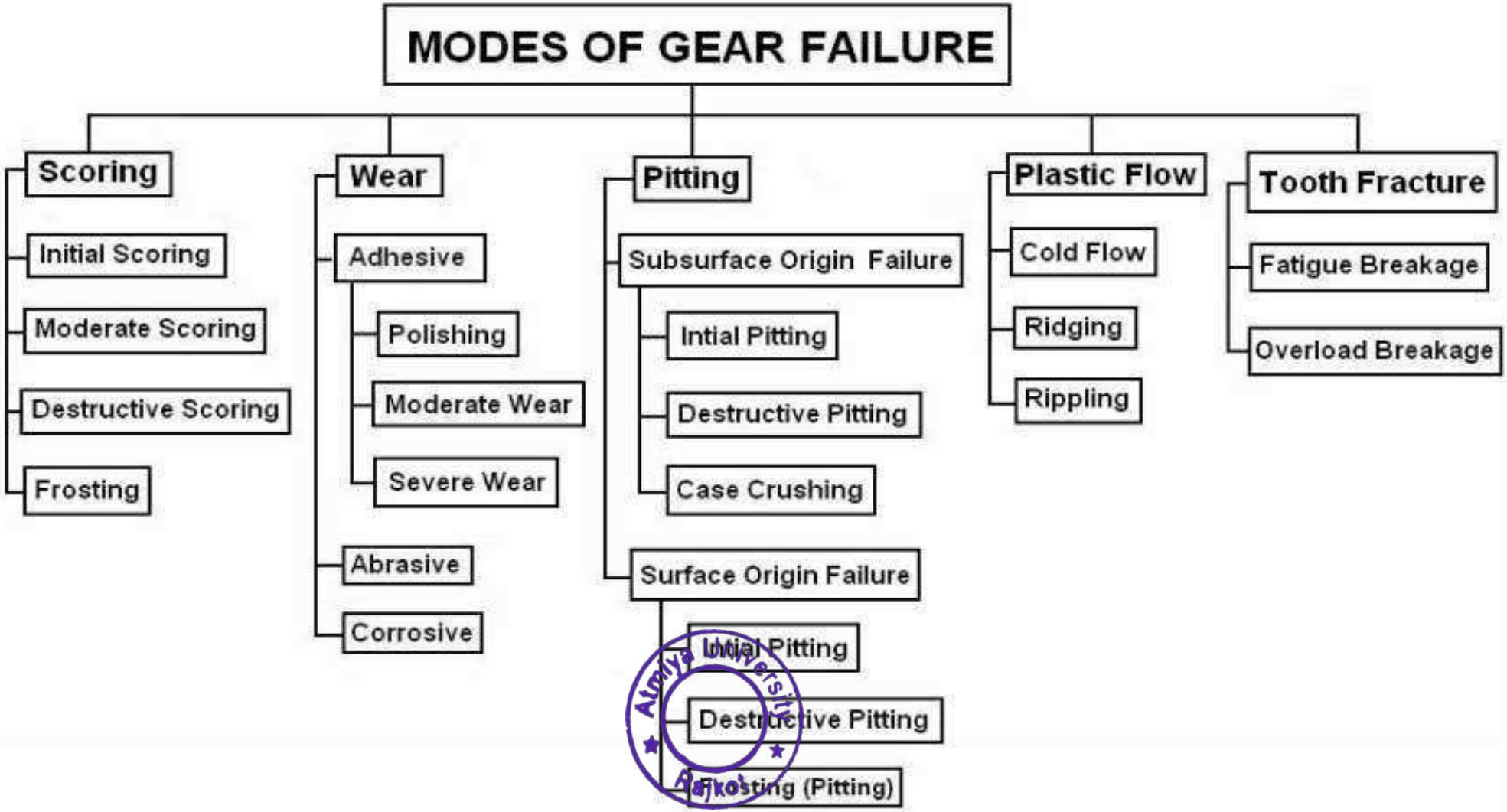

Types of Gear tooth failure

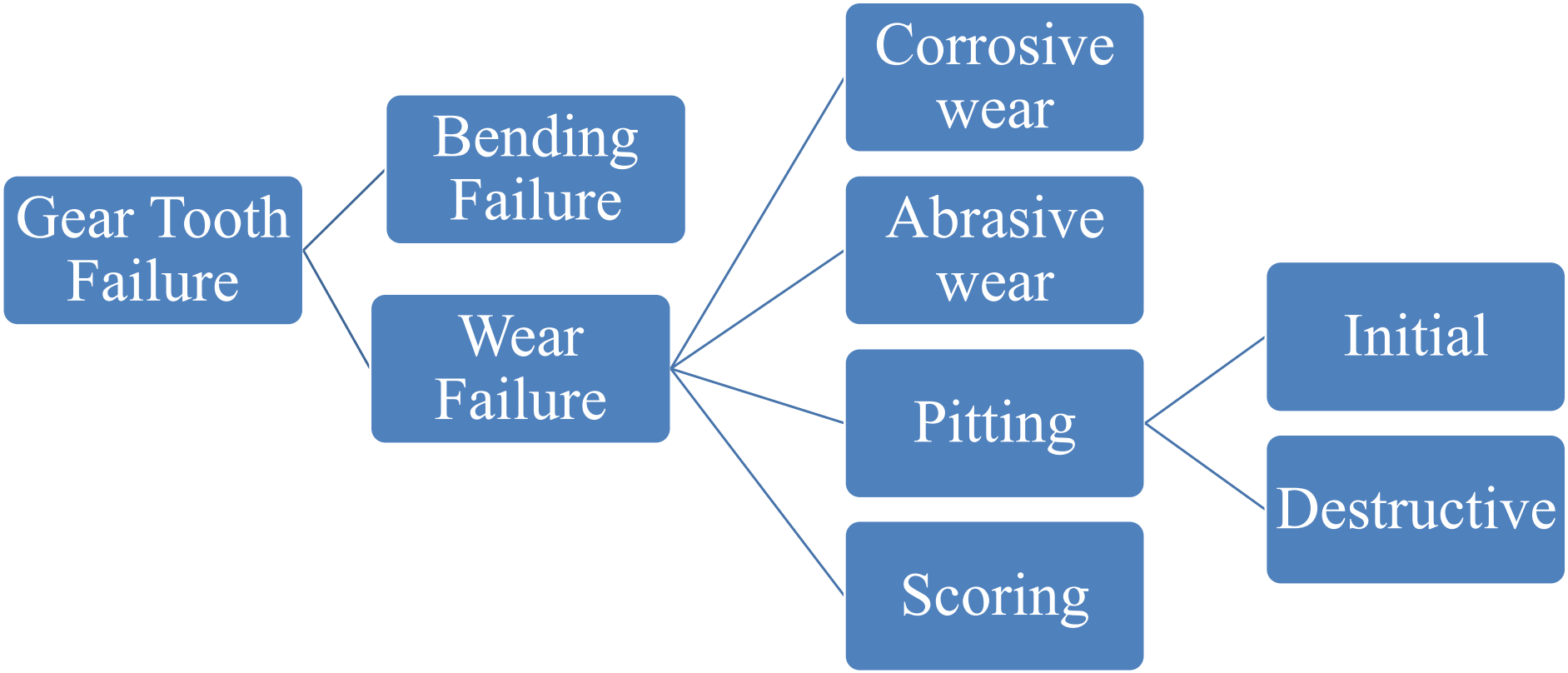

Atmiya University Rajkot

- There are two basic modes of gear tooth failure— breakage of the tooth due to static and dynamic loads and the surface destruction.
- The complete breakage of the tooth can be avoided by adjusting the parameters in the gear design, such as the module and the face width, so that the beam strength of the gear tooth is more than the sum of static and dynamic loads.
- The surface destruction or tooth wear is classified according to the basis of their primary causes.
- The principal types of gear tooth wear are as follows:

1. ***Abrasive Wear***
2. ***Corrosive Wear***
3. ***Initial Pitting***
4. ***Destructive Pitting***
5. ***Scoring***

Atmiya University Rajkot

Bending Failure or Tooth Breakage

- It is like cantilever beam subjected to repetitive bending stress with varying magnitude, which leads to fatigue.
- It can be avoided by,

1. Adjusting parameters like module and face width.
2. Generally small fillet radius is provided at the base on the tooth.

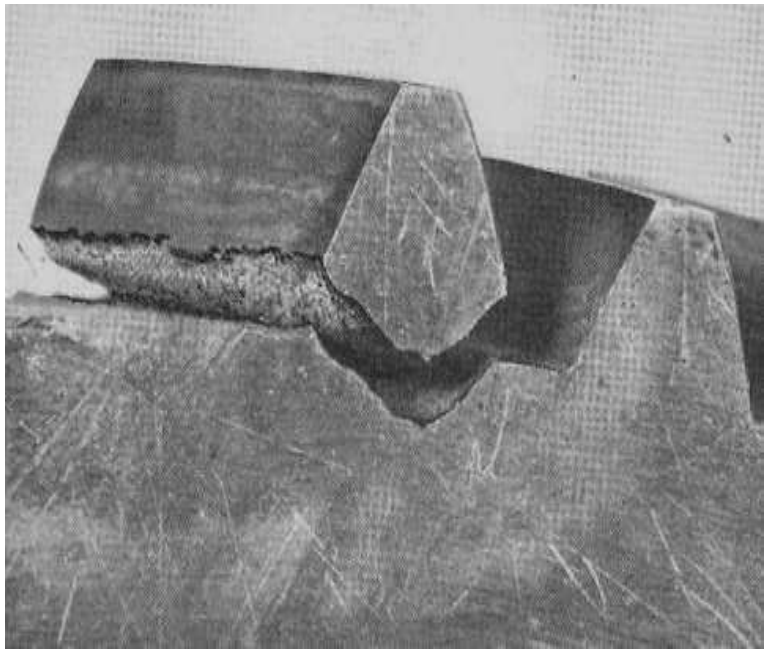

TOOTH BREAKAGE

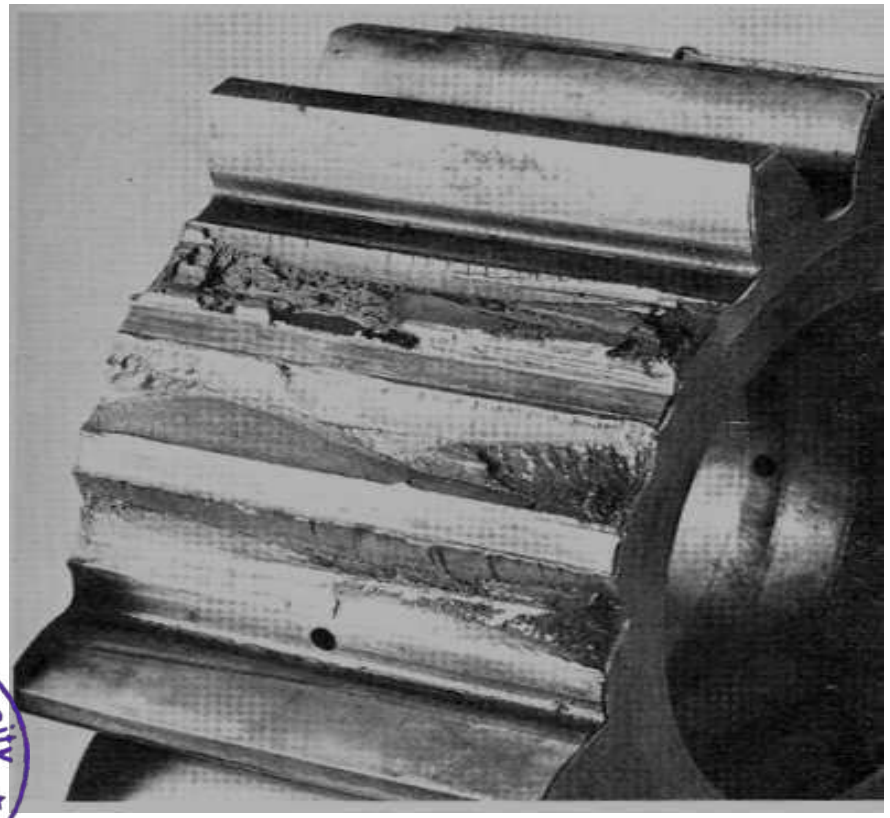

BENDING FATIGUE

Atmiya University Rajkot

- Bending fatigue failure occurs over a long period of time.
- The initiation of crack takes place at the weakest point, normally at the root of the tooth or at the fillet where high stress concentration exists together with highest tensile stress from bending or from the surface defects.
- The crack slowly propagates over 80 to 90% of the life.
- Then crack propagates fast and suddenly results in fracture of the tooth.
- The fractured surface will exhibit beach marks in the slow crack propagation region and brittle fracture behaviour in sudden fracture region.

Atmiya University
Rajkot

Corrosive wear

- The corrosion of the tooth surface is caused by corrosive elements, such as extreme pressure additives present in lubricating oils and foreign materials due to external contamination.
- These elements attack the tooth surface, resulting in fine wear uniformly distributed over the entire surface.
- Remedies against this type of wear are, providing complete enclosure for the gears free from external contamination, selecting proper additives and replacing the lubricating oil at regular intervals.

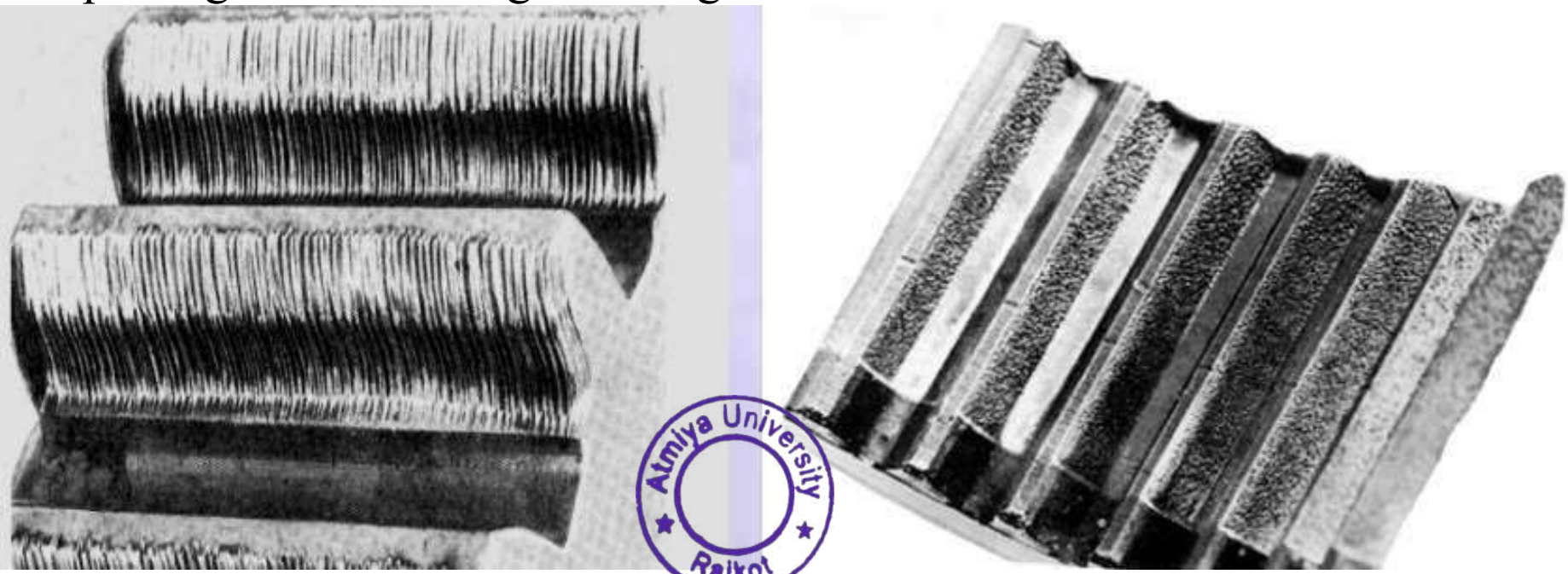

Atmiya University Rajkot

CORROSIVE WEAR

Abrasive wear

- Foreign particles in the lubricant, such as dirt, rust, weld spatter or metallic debris can scratch the tooth surface.
- Remedies against this type of wear are

1. Provision of oil filters.
2. Increasing surface hardness and use of high viscosity oils.
3. A thick lubricating film developed by these oils allows fine particles to pass without scratching.

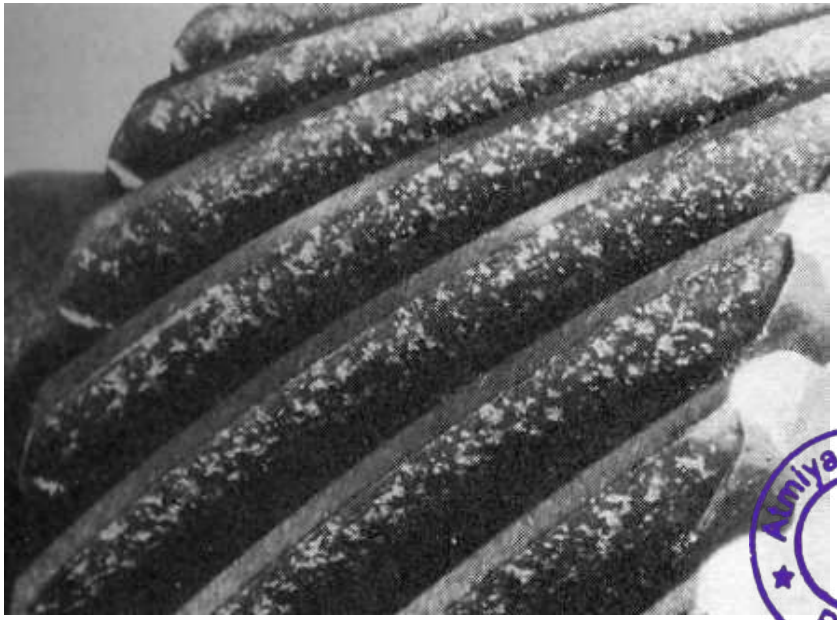

Atmiya University Rajkot

ADHESIVE WEAR

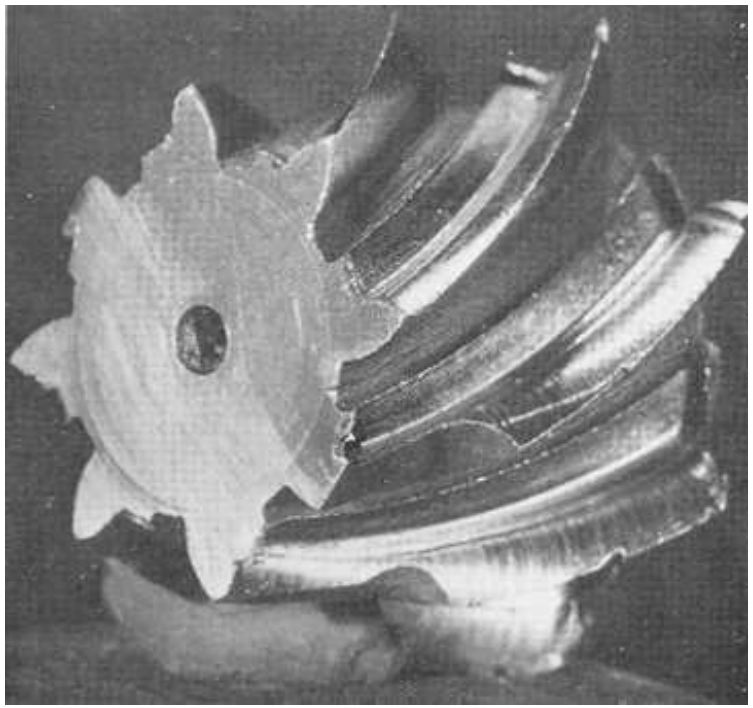

ABRASIVE WEAR

Initial or corrective pitting

- The initial or corrective pitting is a localized phenomenon, characterized by small pits at high spots.
- Such high spots are progressively worn out and the load is redistributed.
- Initial pitting is caused by the errors in tooth profile, surface irregularities and misalignment.
- It can be avoided by,

1. Improving surface finish through precise machining.
2. Proper alignment of gears so that the load is uniformly distributed across the full face width, and reducing the dynamic loads.

Atmiya University Rajkot

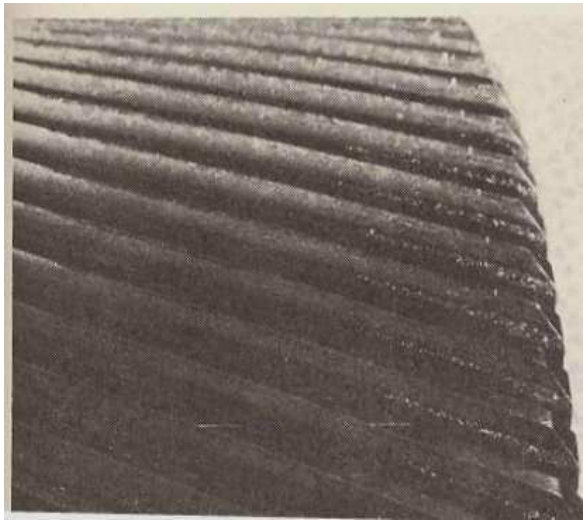

INITIAL PITTING

Destructive pitting

- Destructive pitting is a surface fatigue failure, which occurs when the load on the gear tooth exceeds the surface endurance strength of the material.
- This type of failure is characterized by pits, which continue to grow resulting in complete destruction of the tooth surface and, in some cases, even premature breakage of the tooth.
- Destructive pitting depends upon the magnitude of the Hertz' contact stress and the number of stress cycles.
- This type of failure can be avoided by designing the gears in such a way that the wear strength of the gear tooth is more than the sum of static and dynamic loads.
- The surface endurance strength can be improved by increasing the surface hardness.

Atmiya University Rajkot

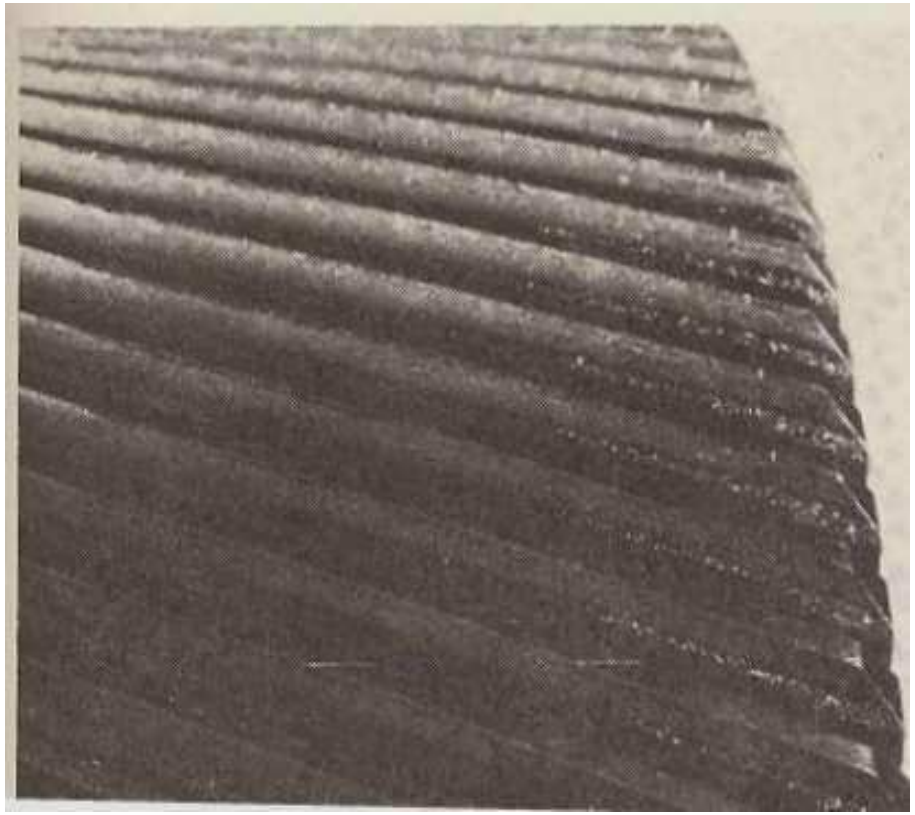

INITIAL PITTING

DESTRUCTIVE PITTING

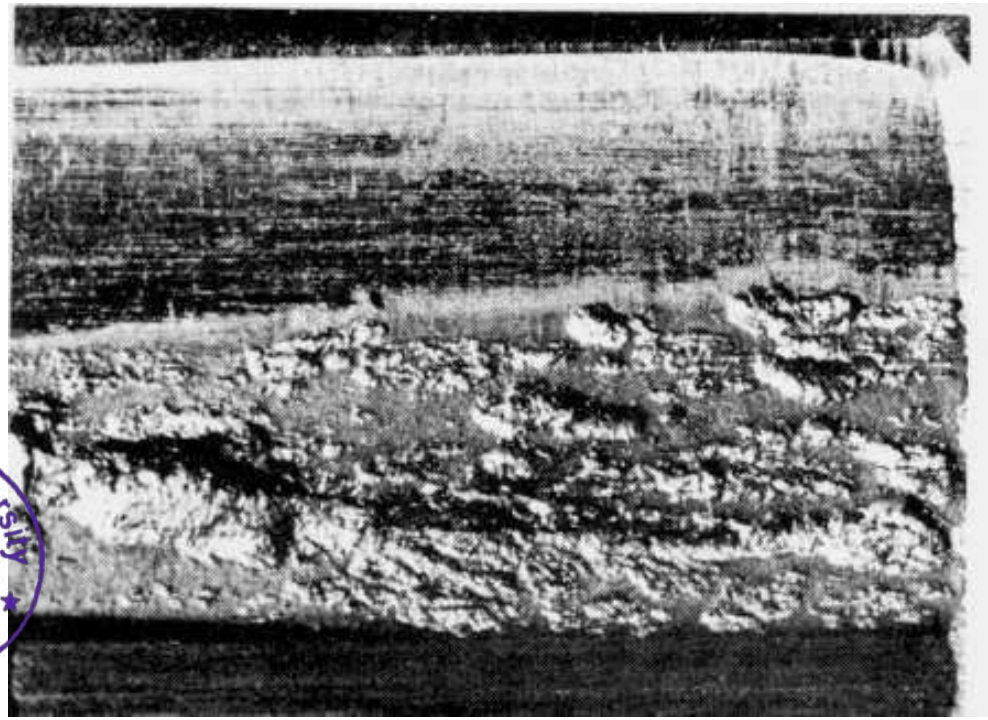

Atmiya University
Rajkot

Scoring

- Excessive surface pressure, high surface speed and inadequate supply of lubricant result in the breakdown of the oil film.
- This results in excessive frictional heat and overheating of the meshing teeth.
- Scoring is a stick-slip phenomenon, in which alternate welding and shearing takes place rapidly at the high spots.
- The rate of wear is faster.
- Scoring can be avoided by selecting the parameters, such as surface speed, surface pressure and the flow of lubricant in such a way that the resulting temperature at the contacting surfaces is within permissible limits.
- The bulk temperature of the lubricant can be reduced by providing fins on the outside surface of the gear box and a fan for forced circu1ation of air over the fins.

Atmiya University Rajkot

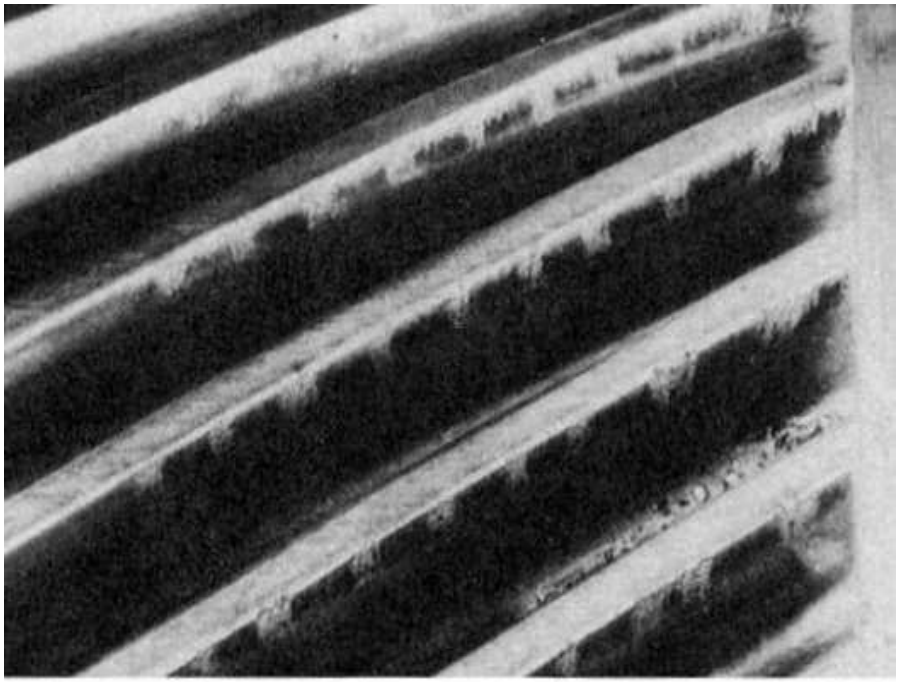

INITIAL SCORING

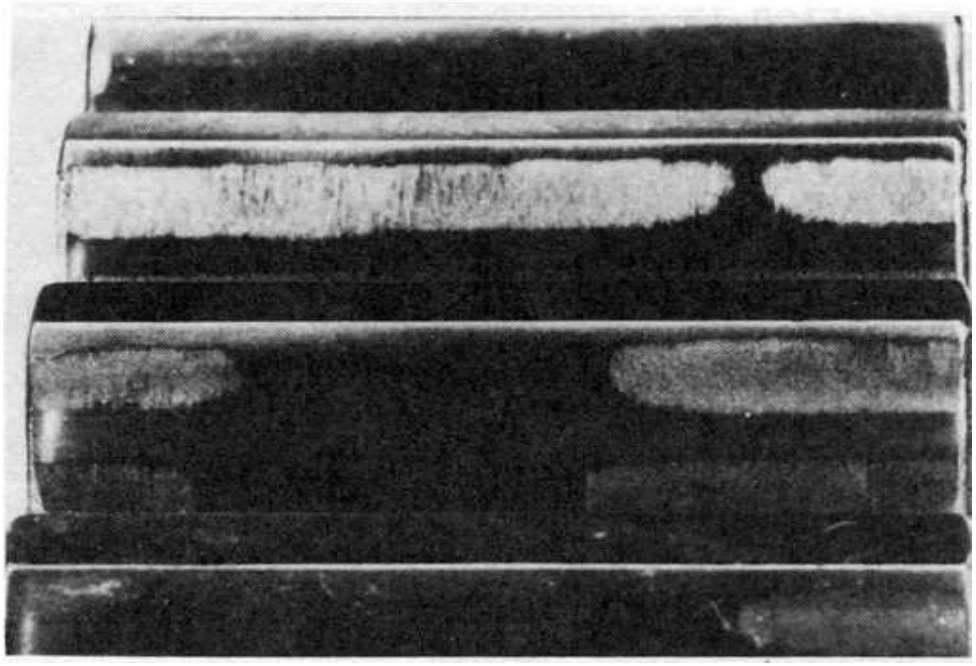

MODERATE SCORING

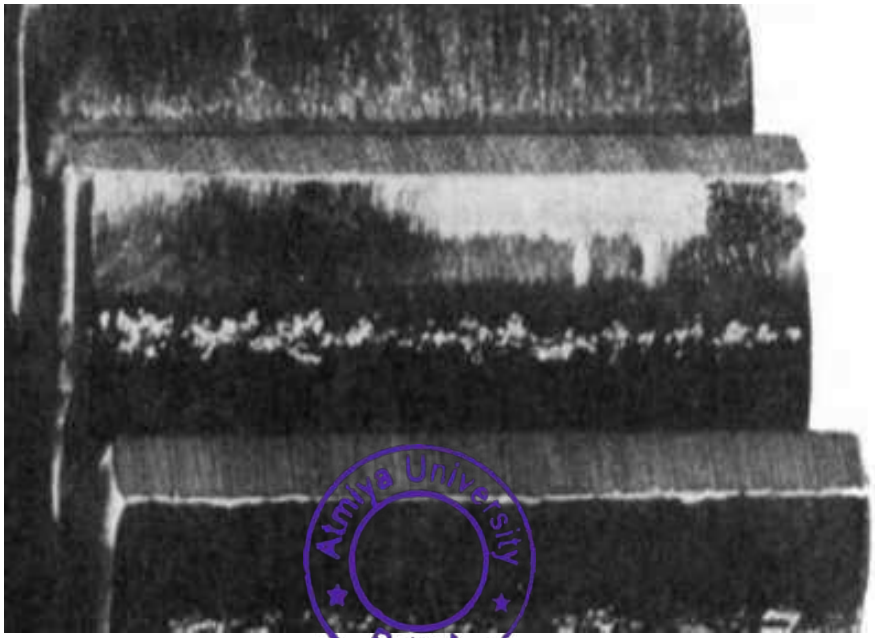

Atmiya University
Rajkot

DESTRUCTIVE SCORING

Desirable Properties of Gear Material

- The load carrying capacity of the gear tooth depends upon the ultimate tensile strength or the yield strength of the material. When the gear tooth is subjected to fluctuating forces, the endurance strength of the tooth is the deciding factor. The gear material should have sufficient strength to resist failure due to breakage of the tooth.
- In many cases, it is 'wear rating' rather than 'strength rating' which decides the dimensions of the gear tooth. The resistance to wear depends upon alloying elements, grain size, percentage of carbon, and surface hardness. The gear material should have sufficient surface endurance strength to avoid failure due to destructive pitting.
- For high-speed power transmission, the sliding velocities are very high and the material should have low coefficient of friction to avoid failure due to scoring.
- The amount of thermal distortion or warping during the heat treatment process is a major problem in gear applications. Due to warping, the load gets concentrated at one corner of the gear tooth. Alloy steels are superior to plain carbon steels in this respect, due to consistent thermal distortion.

Atmiya University Rajkot

Gear Material: Cast Irons

Advantages

1. Low cost
2. Good damping property
3. Good surface endurance strength
4. Presence of graphite (act as a lubricant) reduces possibility of scoring.
5. It can be easily cast into complicated shapes.

Disadvantages

1. Low bending strength
2. They are brittle and so cannot be used for gear subjected to shock loading.

Atmiya University Rajkot

Gear Material: Steel

Advantages

1. High bending endurance strength.
2. High surface endurance strength.
3. Because of the ductile case, they can absorb shock and so can be used for gear subjected to shock loading.

Disadvantages

1. High cost
2. Poor damping property.
3. They are subjected to thermal distortion during heat treatment.

Atmiya University
Rajkot

Gear Material: Non-Ferrous Metals

- Like Bronze, Copper, Zinc, Aluminium, etc.
- Bronze (Copper + Tin) is most common, because of their capacity to withstand heavy sliding loads (like in worm gear)

Advantages of Bronze

1. Low coefficient of friction to avoid scoring
2. It can be cast into complicated shapes.
3. Good corrosion resistance
4. Good wear resistance
5. High toughness

Disadvantage of Bronze

1. Very high cost

Atmiya University Rajkot

Gear Material: Sintered Metals

- Made by powder metallurgical process .
- Where strength is not a prime consideration (Light duty application).
- Used in washing machine, food mixer, timing device, toys, etc.
- They are wear resistant and easy to lubricate
- The usual base material for sintered gears are iron or copper.

Atmiya University Rajkot

Gear Material: Non-Metals

Like Bakelite, Nylon, Fibre reinforced plastics.

Advantages

1. Low cost
2. Easy to manufacture
3. Extremely light weight
4. Operate with marginal or no lubrication
5. Operate quietly

Disadvantage

1. Do not have sufficient strength and hence used for light duty applications

Atmiya University Rajkot

Heat treatment: Case carburising

- Case carburising is most widely used process for hardening gear teeth surfaces.
- Heavy duty transmission gears are generally all case carburised.

1. In these process the common practice is to begin with a low carbon steel.
2. Steel having a carbon content of 0.10 to 0.25% is heated in a medium which is enriched in carbon.
3. The surface soaks up carbon and becomes hard after quenching.

Atmiya University Rajkot

Heat treatment: Nitriding

- The case properties of nitriding steels are practically the same as in the case of carburising steels, except that these steels are more suitable for high temperature services.
- In this process, the hardening agents are nitrides formed on the surface of gear teeth due to absorption of nitrogen when the gears are treated in a nitrogenous medium like ammonia gas.

Atmiya University Rajkot

Induction Hardening

- By this process, special steels can develop hardness. but the process involves considerable technical skill. High frequency alternating current is used to heat up the gear surfaces locally. Hardness is obtained after subsequent quenching.

Flame Hardening

- This process is similar to induction hardening. Only, the heat required in this case is provided by an oxy-acetylene flame. Flame hardening can be used to harden the tooth surface layers as well as the whole tooth, if necessary.

Atmiya University Rajkot

Gear Lubrication

- Proper lubrication of the gear teeth is essential for the satisfactory performance and durability of the gears.
- Gears are lubricated by grease, straight mineral oils or EP (extreme pressure) lubricants.
- Grease is used as lubricant for the gears of hand-operated mechanisms, where the pitch line velocity is low and the operation is intermittent.
- For medium velocities, the gears are enclosed in a box and dipped in a bath of mineral oil. This is known as *splash lubrication*.
- In some cases, gears are lubricated by spraying the lubricating oil, in which a jet of oil is directed towards the meshing teeth.
- For heavy duty applications, EP lubricants are used. EP lubricants are mineral oils with additives for the purpose of improving the performance of the oil.
- They are used in the automobile gear box and heavy duty industrial gearboxes.

Atmiya University Rajkot

Purpose of Gear Lubrication

1. To reduce the possibility of the scoring failure
2. To reduce the wear of the teeth
3. To reduce the power loss (friction)
4. To act as coolant by dissipating the heat
5. To carry away worn-out particles
6. To minimize noise, vibration and shock
7. To prevent the corrosion.

Atmiya University
Rajkot

Lubricant used in Gears

- **Grease**
- For very low pitch line velocities (<0.8 m/s)
- **Straight mineral oils**
- For medium duty gears
- **Motor oils**
- For heavy duty gears
- It has moderately additives
- SAE 5W, 10W, 20W, 20, 30, 40
- **Gear oils**
- For heavy duty gears
- It has strong (extreme pressure) additives
- SAE 75W, 80W, 90, 140, 250

Atmiya University Rajkot

Modes of Gear Lubrication

- Grease Lubrication
  - For very low pitch line velocities (<0.8 m/s)
- Drip Feed Lubrication
  - For low pitch line velocities (<1.5 m/s)
- Splash Lubrication
  - For medium pitch line velocities (<15 m/s)
- Spray or Jet Lubrication
  - For high pitch line velocities

Atmiya University Rajkot

Heat Dissipation

- Heat is carried out by the lubricating oil and dissipates it to the surrounding atmosphere to casting
- So temperature of oil will increase and it will loose it's property.
- So proper quantity and quality of oil is required with proper method.

Atmiya University Rajkot

Objective in Design of Gear Pair

1. High power transmission
2. Compact arrangement
3. High efficiency
4. Low initial cost
5. Low maintenance and running cost
6. Noise and vibration free operation

Atmiya University
Rajkot

Design of Spur Gear Pair

1. Selection of tooth system
2. Selection of the number of teeth on pinion and gear
3. Selection of the material along with surface hardness for pinion and gear.
4. Selection of the gear grade
5. Estimation of module, face width, pitch circle diameter, addendum and dedendum.

Atmiya University
Rajkot

Safety of Gear Pair

1. Safety against Bending Failure

$$F_b < F_{eff}$$

$$F_b = N_f \times F_{eff}$$

2. Safety against Wear Failure

$$F_W < F_{eff}$$

$$F_W = N_f \times F_{eff}$$

F_b = Bending Strength

F_w= Wear Strength

F_{eff} = Effective load

N_f = Factor of safety

Atmiya University Rajkot

Assumption in analysis of beam strength

1. The full load is acting at tip of a single tooth
2. The effect of the radial force is neglected
3. The load is uniformly distributed across the full face width
4. Effect of the stress concentration is neglected
5. Friction forces due to teeth sliding are neglected.

Atmiya University Rajkot

HELICAL GEAR

Design of Machine Elements (18BTMECC602)

Mechanical Engineering Department,
Atmiya University, Rajkot

Syllabus: Parallel axis Helical Gears

- Pressure angle in the normal and transverse plane
- Equivalent number of teeth-forces and stresses
- Estimating the size of the helical gears.

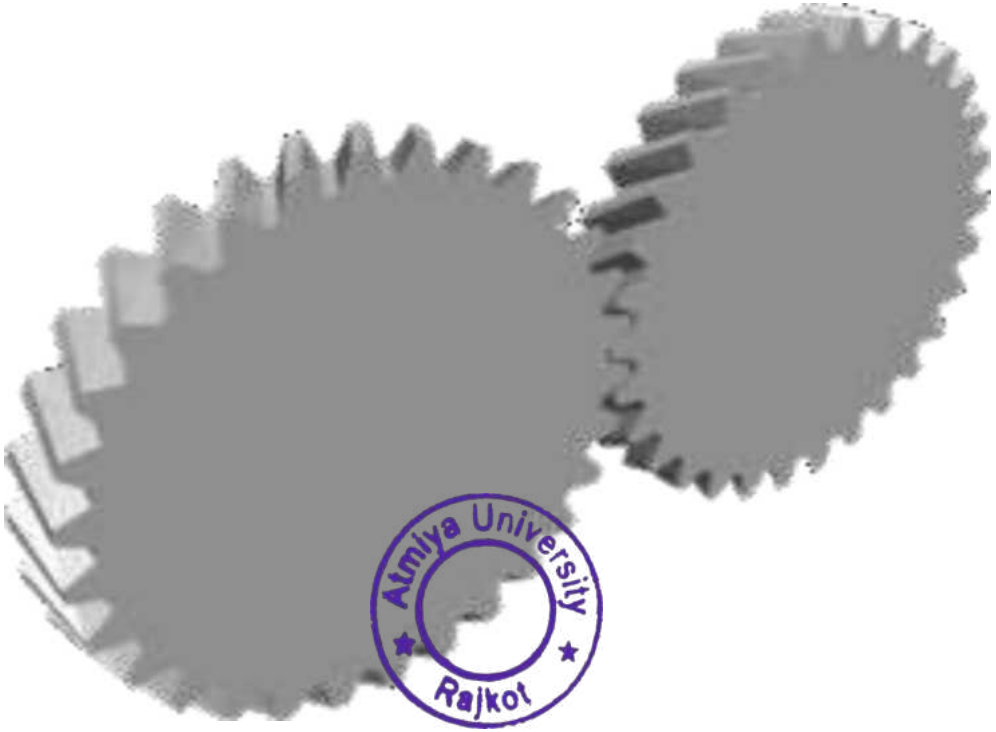

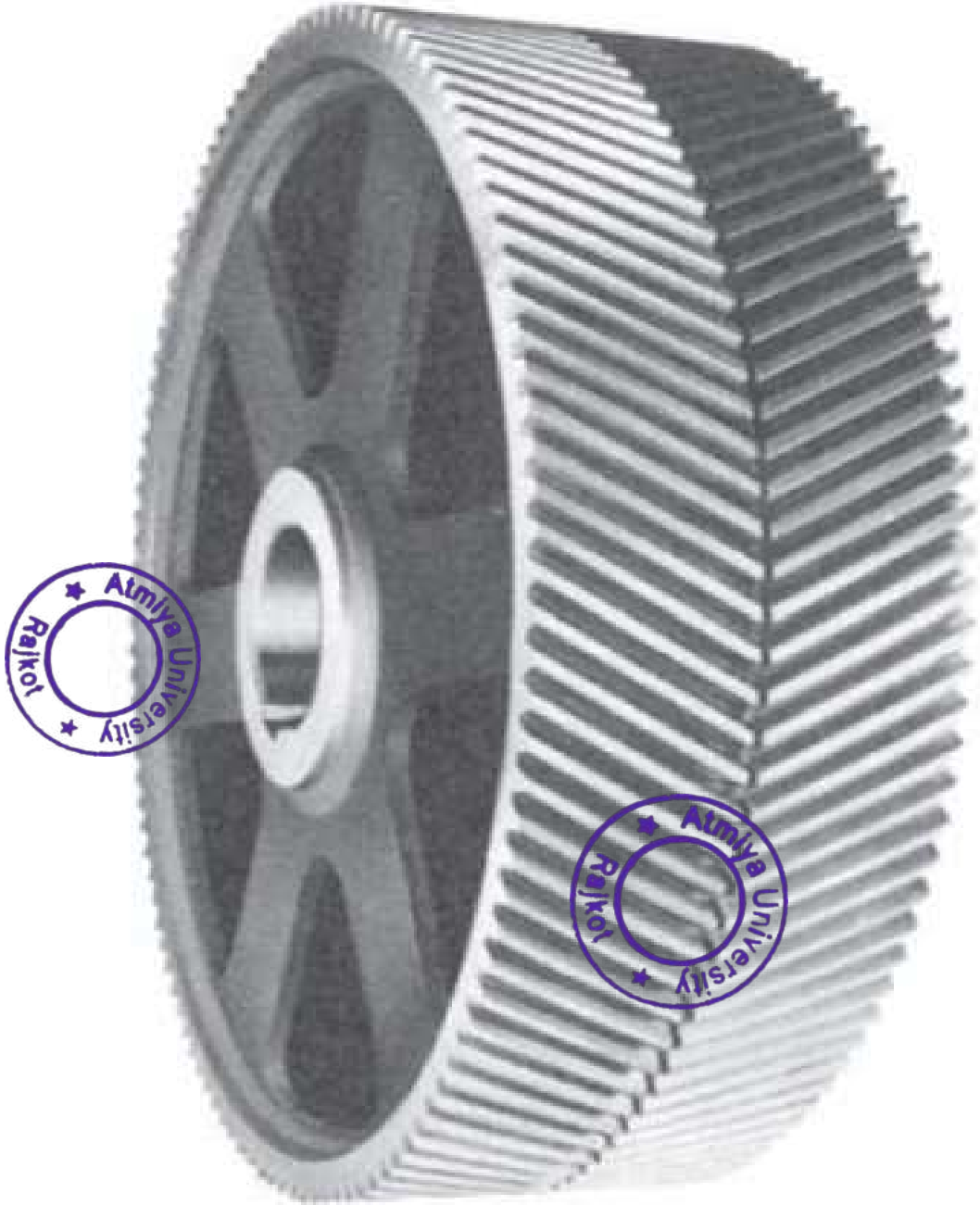

Double helical or *herringbone*

crossed helical gears

Atmiya University Rajkot
Atmiya University Rajkot

Terminology for Helical Gears

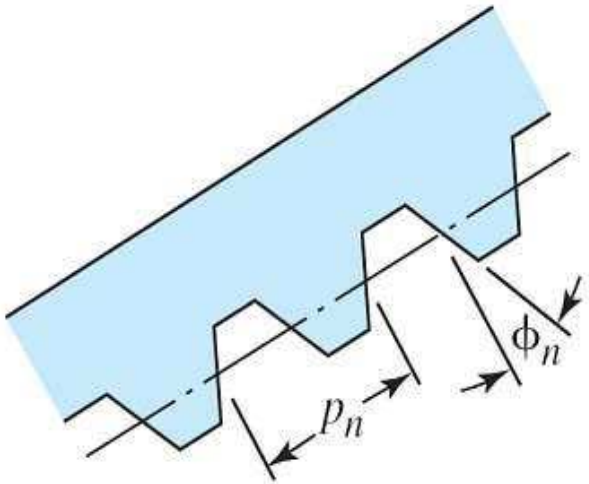

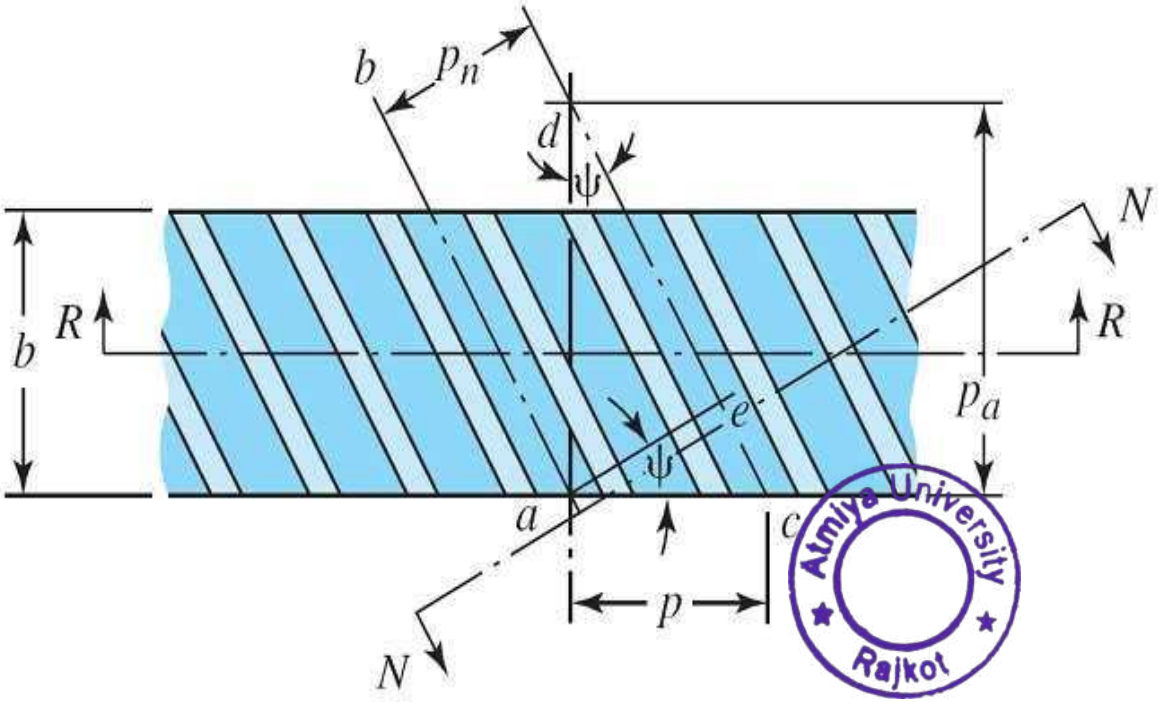

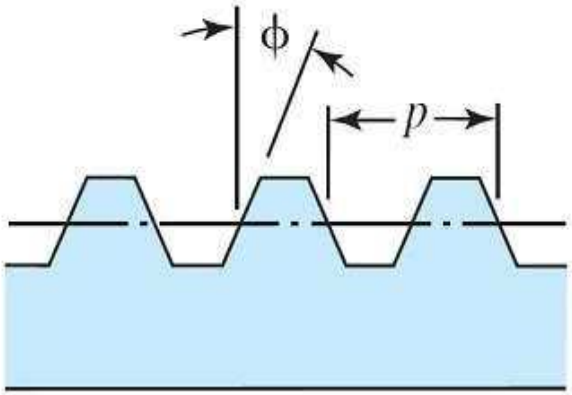

Section *RR*
(in plane of rotation)

Atmiya University
Rajkot

Equivalent spur gear & virtual no of teeth

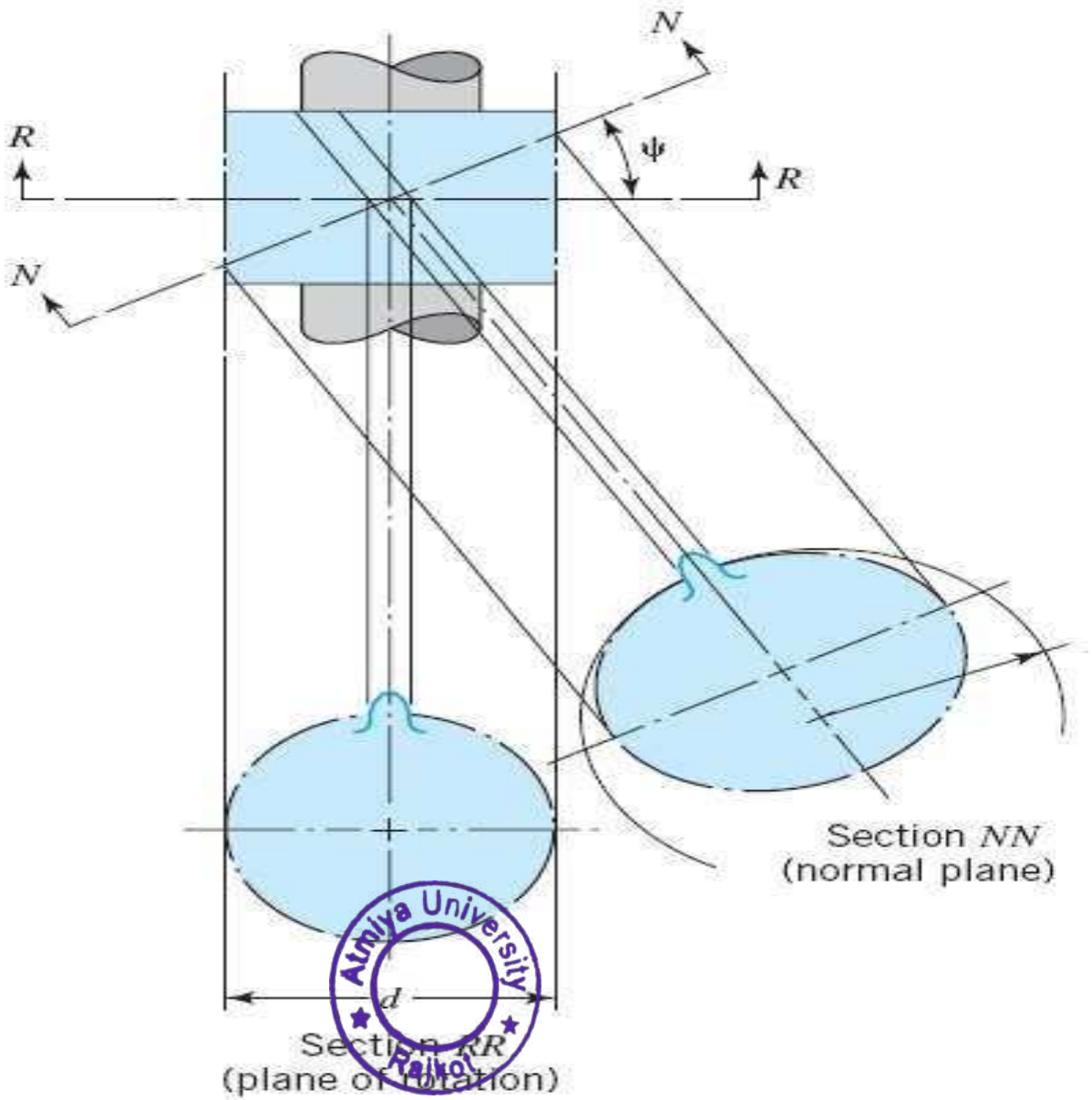

Atmiya University Rajkot

Force analysis of Helical Gears

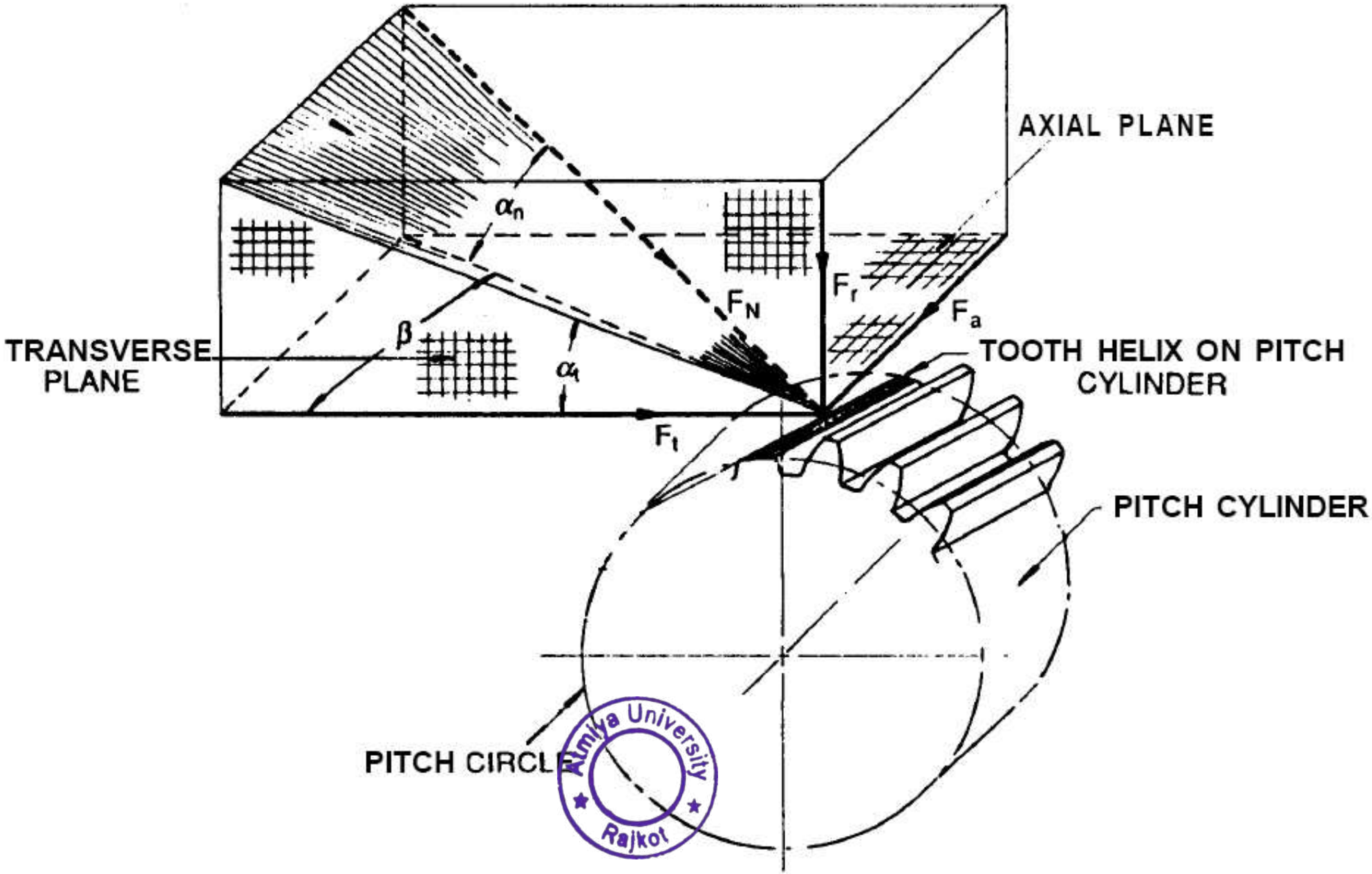

Atmiya University Rajkot

Force analysis of Helical Gears

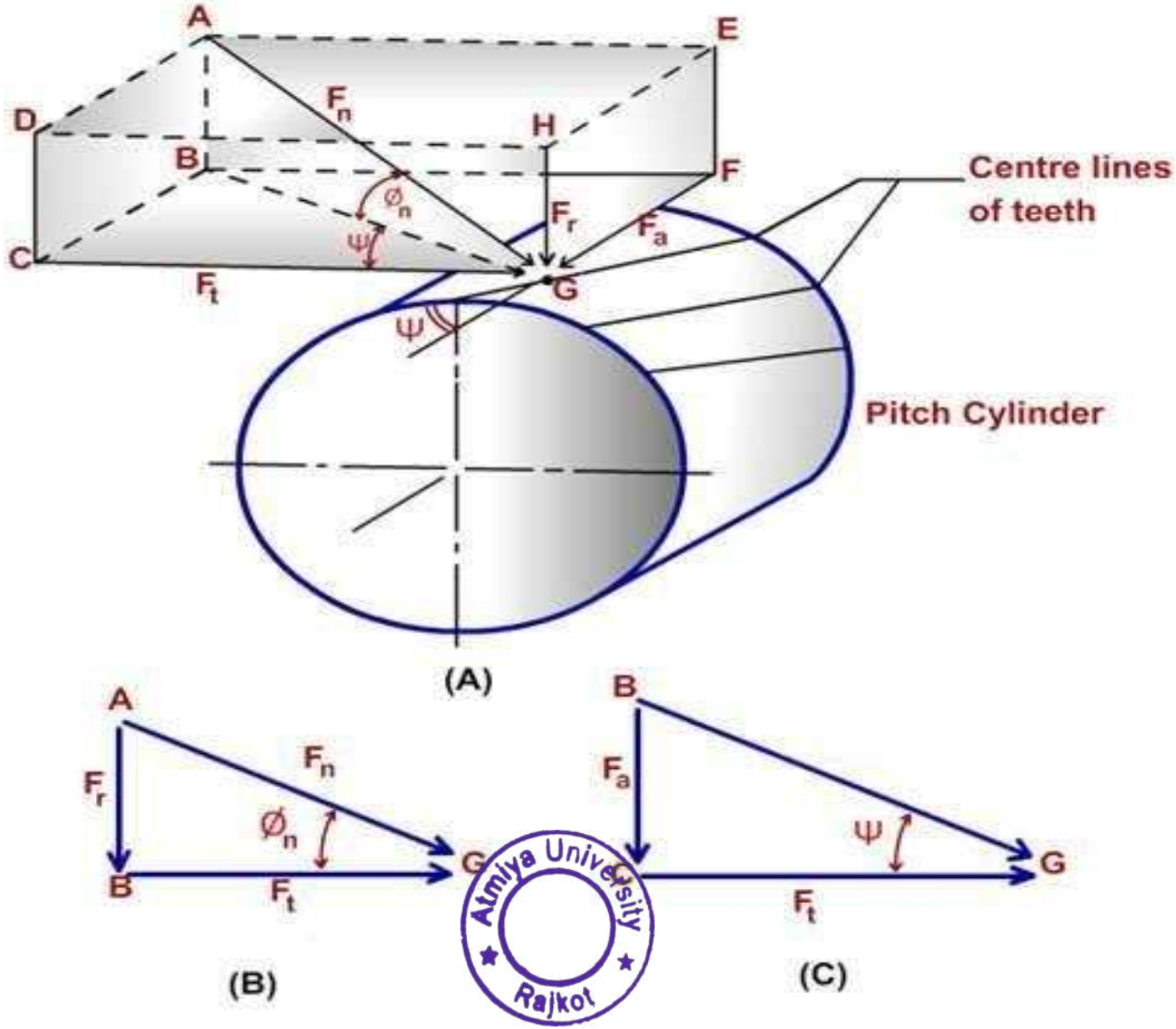

Atmiya University Rajkot

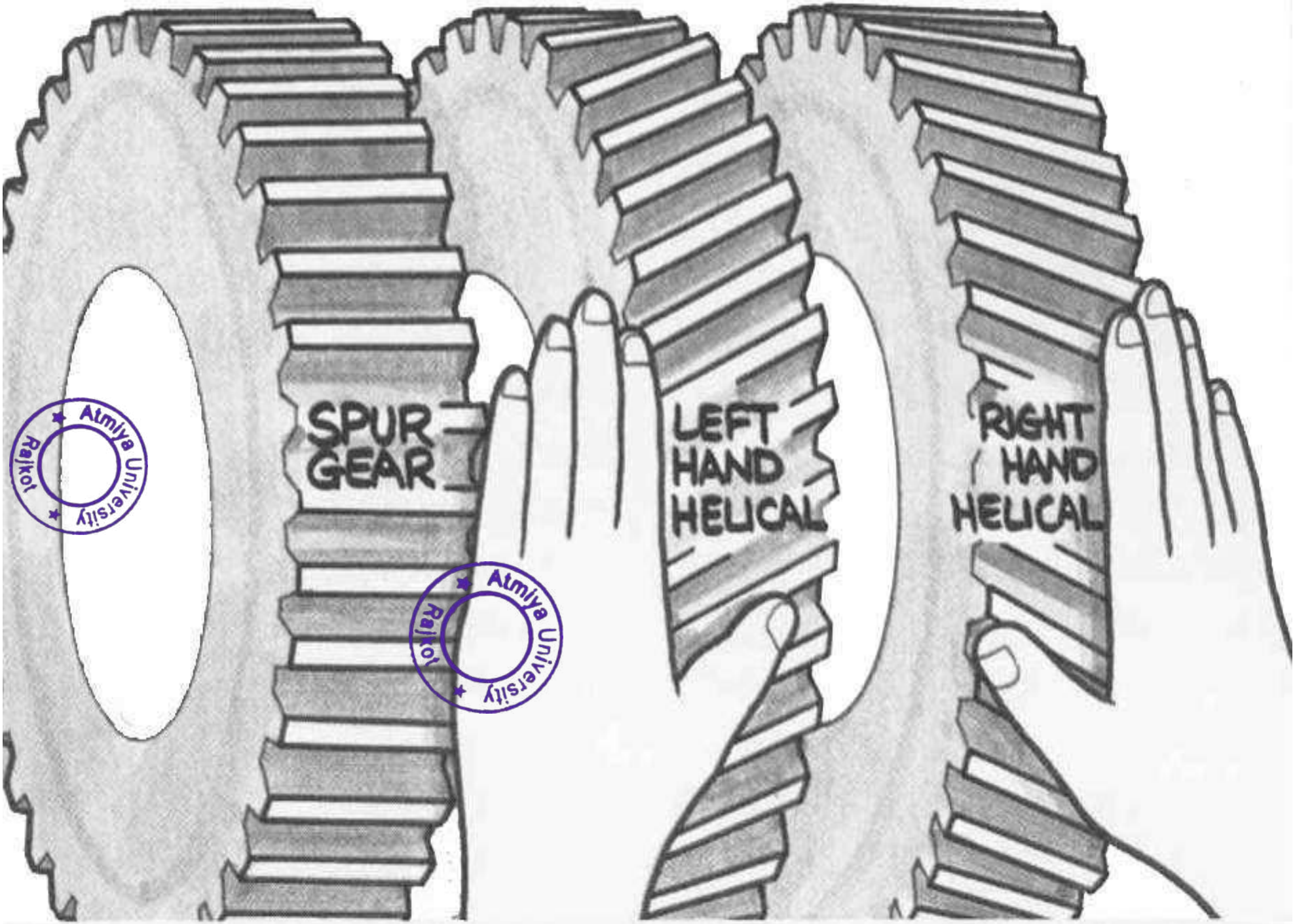

Atmiya University Rajkot
Atmiya University Rajkot

Force analysis of Helical Gears

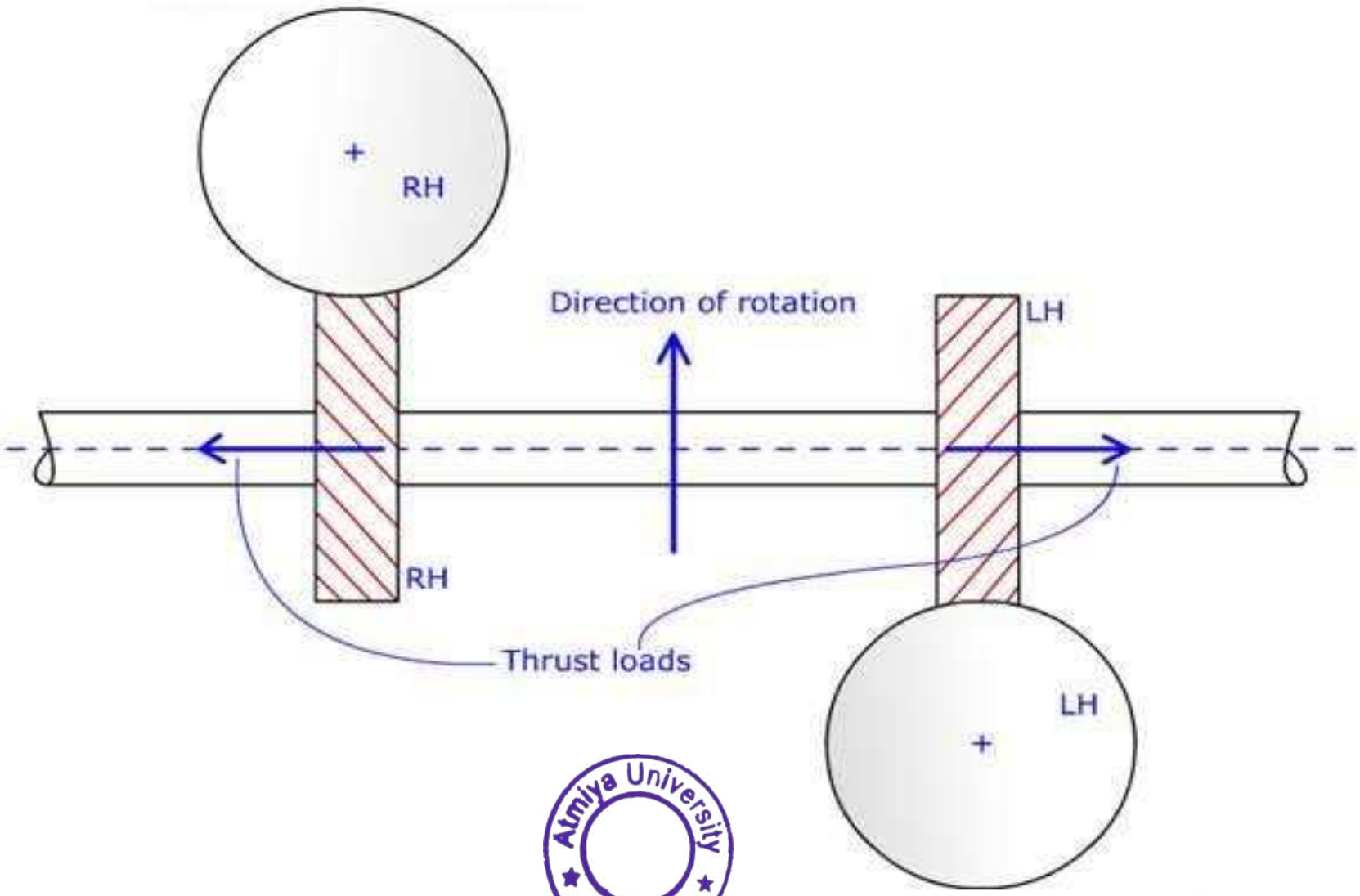

Atmiya University
Rajkot

Thank You

Atmiya University
Rajkot

HELICAR GEAR TERMINOLOGY, FORCE ANALYSIS AND DESIGN PROCEDURE (THEORY & PROBLEMS)

Design of Transmission Systems(DTS)
(21BTMECC404)

Unit No.3

Design of Gears

Prepared By:- Shivang S. Jani

Asst. Professor

Mechanical Engineering Department

INTRODUCTION

In helical gears, teeth are cut at an angle, known as **helix angle,** with an axis of the gear.

The helical gears are used either to transmit power between two parallel shafts or to transmit power between two non-parallel and non-intersecting shafts.

In spur gear pair, the contact between the two meshing teeth is theoretically a line extending along the entire face width and parallel to the axes. This sudden line contact results in impact, which in turn, generates noise and higher dynamic load at high pitch line velocities.

In helical gears, the contact between the meshing teeth begins as a point contact and gradually extends along the diagonal line across the tooth. This gradual engagement results in smoother and quieter operation even at high pitch line velocities.

The gradual engagement also results in a lower dynamic load.

Another advantage of helical gears is higher contact ratio as compared to spur gears.

Atmiya University Rajkot

2.2 TYPES OF HELICAL GEARS

The helical gears are used either :

(i) to transmit the power between the two parallel shafts ; or

(ii) to transmit the power between the two non-parallel and non-intersecting shafts.

According to the relative positions of the input shaft and output shaft, the helical gears are classified into two types :

1. Parallel Helical Gears
2. Crossed Helical Gears

1. Parallel Helical Gears :

- The parallel helical gears are used for transmitting the power between two parallel shafts, as shown in Fig. 2.1.

Atmiya University Rajkot

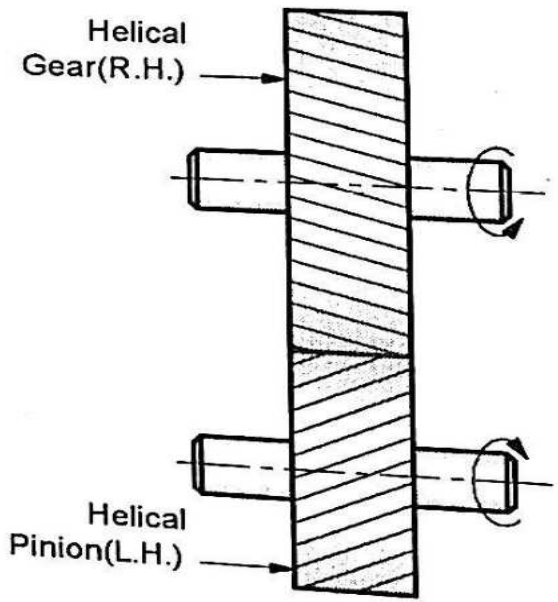

Fig. 2.1 : Parallel Helical Gears

- In parallel helical gears, the magnitude of the helix angle is same for both the pinion and the gear but the hands of the helices are opposite.

2. **Crossed Helical Gears :**

- The crossed helical gears are used for transmitting the motion (or sometimes power) between two non-parallel and non-intersecting shafts, as shown in Fig. 2.2

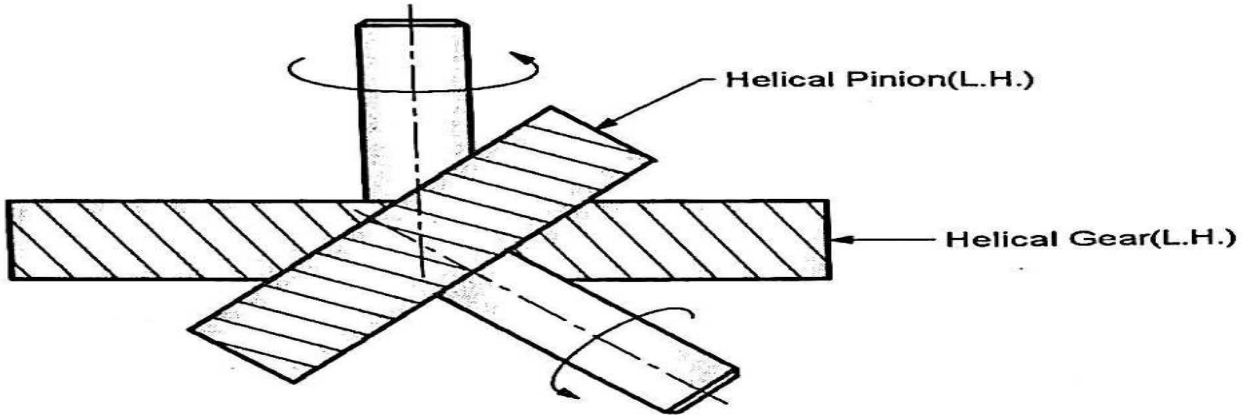

Fig. 2.2 : Crossed Helical Gears

Atmiya University Rajkot

- In crossed helical gears, the pinion and the gear may have the same or opposite hand helices.
- The crossed helical gears are not preferred for power transmission. They are only used for the motion transmission.
- The discussion in this chapter is limited only to the parallel helical gears.

2.3 ADVANTAGES AND LIMITATIONS OF HELICAL GEARS

The advantages and limitations of helical gears are discussed below :

- **Advantages of helical gears :**
  1. In helical gears, the contact between the meshing teeth begins as a point contact and gradually extends along the diagonal line across the tooth. This gradual engagement results in smoother and quieter operation even at high pitch line velocities.
  2. In helical gears, the dynamic load is low because of gradual engagement.
  3. In helical gears, the contact ratio is high as compared to spur gears.
- **Limitations of helical gears :**
  1. Helical gears create axial thrust on the shaft and the bearings.
  2. Helical gears are costlier than spur gears.

2.4 HELICAL GEAR TERMINOLOGY

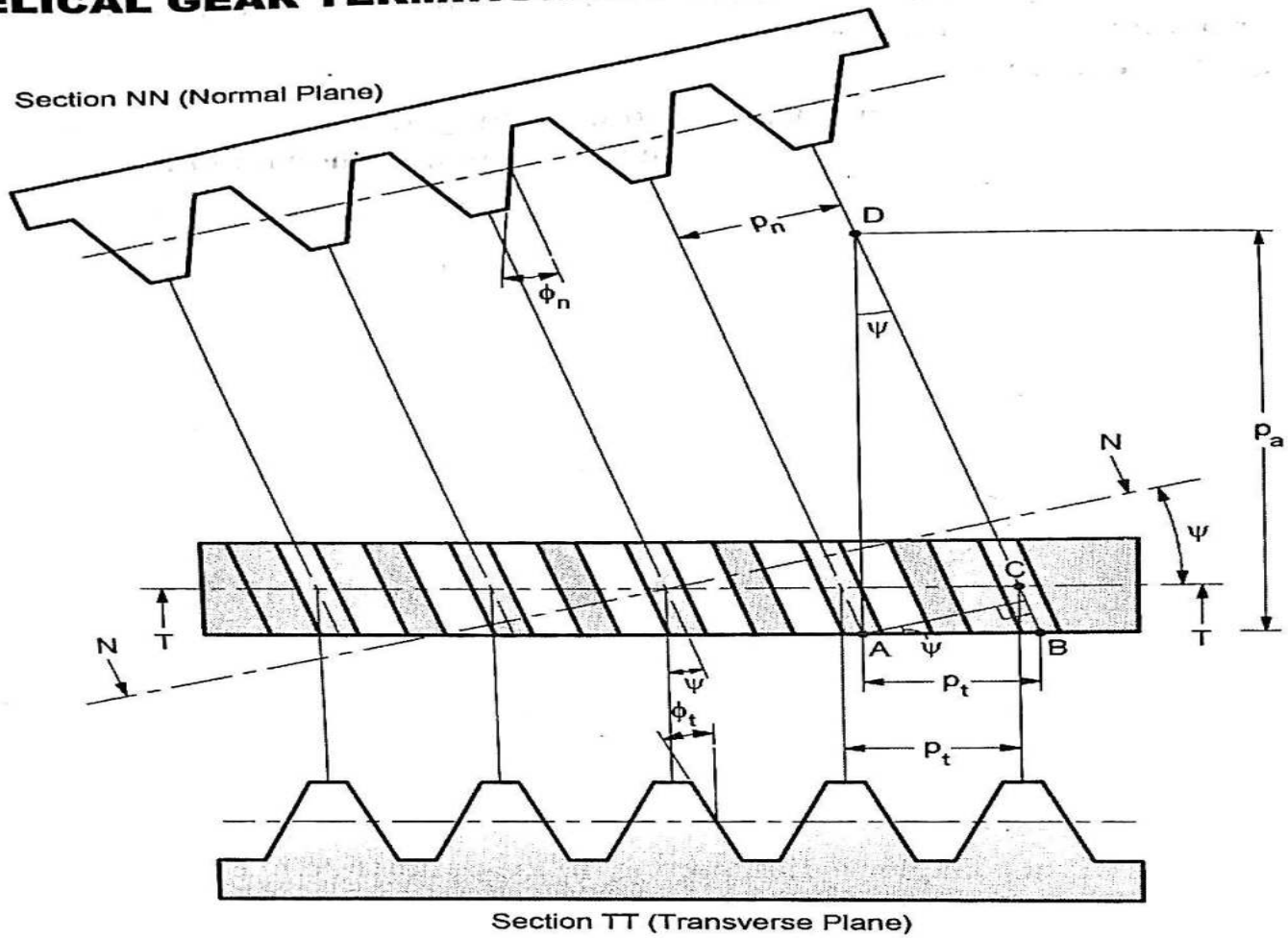

Fig. 2.3 : Helical Gear Terminology

The terminology used in helical gears is discussed below :

1. Helix Angle
2. Transverse Circular Pitch and Transverse Module
3. Normal Circular Pitch and Normal Module
4. Axial Pitch
5. Transverse Pressure Angle
6. Normal Pressure Angle
7. Face Width
8. Speed Ratio or Gear Ratio
9. Centre Distance
10. Tooth Proportions

Atmiya University Rajkot

1. **Helix Angle (ψ) :**

- **Helix angle** is an angle made by helix with the axis of rotation or it is an angle made by teeth with the axis of rotation. It is denoted by 'ψ'.
- The helix angle is always measured on the cylindrical pitch surface.
- Higher helix angle results in more gradual engagement, and hence smoother operation.
- However, higher helix angle also results in higher axial thrust which is undesirable.
- For a single helical gears, the helix angle normally ranges from 15° to 30°, while for a double helical gears or herringbone gears, the helix angle ranges from 23° to 30° or even sometimes upto 45° . The values of helix angle are not standardized.
- A double helical gear (or herringbone gear) is equivalent to two identical helical gears of opposite hand, mounted side by side on the same shaft.
- They develop axial thrusts of equal magnitudes and opposite directions. Hence, the net axial thrust developed by the double helical gear is zero.
- ***Two meshing parallel helical gears must have the same helix angle but the opposite hands. When the helical gear is placed on the surface with axis vertical, if the teeth are inclined towards the right, it is called right hand gear, and if the teeth are inclined towards the left, it is called left hand gear.***

Atmiya University Rajkot

2. **Transverse Circular Pitch (p_t) and Transverse Module (m_t) :**

- Circular pitch measured in the transverse plane (or plane of rotation) is called **transverse circular pitch 'p_t'**.
- Similarly, the module in the transverse plane is called **transverse module 'm_t'**.

$$p_t = \frac{\pi d}{z} \qquad \text{...(2.1)}$$

and

$$m_t = \frac{p_t}{\pi} = \frac{d}{z} \qquad \text{...(2.2)}$$

Where, p_t = transverse circular pitch, mm

m_t = transverse module, mm

d = pitch circle diameter, mm

z = number of teeth

3. **Normal Circular Pitch (p_n) and Normal Module (m_n) :**

- Circular pitch measured in the normal plane (or plane perpendicular to the teeth) is called **normal circular pitch 'p_n'**.
- Similarly, the module in the normal plane is called **normal module 'm_n'**.

$$m_n = \frac{p_n}{\pi} \qquad \text{...(2.3)}$$

From Fig. 2.3,

$$\frac{AC}{AB} = \cos\psi$$

$$\therefore \quad \frac{p_n}{p_t} = \cos\psi$$

$$\text{or} \quad p_n = p_t \cdot \cos\psi \qquad \text{...(2.4)}$$

$$\text{Similarly,} \quad m_n = m_t \cdot \cos\psi \qquad \text{...(2.5)}$$

where, p_n = normal circular pitch, mm

m_n = normal module, mm

ψ = helix angle

- Whether transverse module or normal module is taken as standard depends upon the gear manufacturing method.
- *As helical gears are normally generated by hobbing,* **normal module** *is standard and is equal to the module of the hob cutter.*
- *The standard normal modules in mm recommended by ISO are given in Table 2.1.*

Table 2.1 : Standard Normal Modules

First Choice	1.0, 1.25, 1.5, 2, 2.5, 3, 4, 5, 6, 8, 10, 12, 16, 20, 25, 32, 40, and 50.
Second Choice	1.125, 1.375, 1.75, 2.25, 2.75, 3.5, 4.5, 5.5, 7, 9, 11, 14, 18, 22, 28, 36, and 45

Rajkot Adhiya University

4. Axial Pitch (p_a) :

Axial pitch is the distance between the corresponding points on the adjacent teeth measured on the pitch surface in the axial direction.

From Fig. 2.3,

$$\frac{AB}{AD} = \tan\psi$$

$$\therefore \quad \frac{p_t}{p_a} = \tan\psi$$

$$\text{or} \quad p_a = \frac{p_t}{\tan\psi} \qquad \text{...(2.6)}$$

where, p_a = axial pitch, mm

5. Transverse Pressure Angle (ϕ_t) :

- Pressure angle measured in the transverse plane or plane of rotation is called **transverse pressure angle.** It is denoted by 'ϕ_t'.

6. Normal Pressure Angle (ϕ_n) :

- Pressure angle measured in the normal plane or plane perpendicular to the teeth is called **normal pressure angle.** It is denoted by 'ϕ_n'.
- In section 2.7, it is shown that the normal pressure angle and transverse pressure angle are related by the equation,

$$\tan \phi_t = \frac{\tan\phi_n}{\cos \psi} \qquad ...(2.7)$$

- Generally, the normal pressure angle is standard, while transverse pressure angle is non-standard.
- The standard normal pressure angles are : 14.5°, 20°, 22.5° and 25°. The most widely used normal pressure angle is 20°.

7. Face Width (b) :

- It is the length of the gear tooth measured along a line parallel to the gear axis. It is usually denoted by '**b**'.
- **Face advance** *can be defined as the distance by which the leading edge of the tooth advances the trailing edge of the same tooth, measured along the pitch circle.*
- From Fig. 2.4, face advance is given by,

$$FA = b \tan \psi \qquad ...(2.8)$$

The ratio of face advance to the transverse circular pitch is called **face contact ratio** or **axial contact ratio** or **overlap ratio 'M_F'.** It is given by,

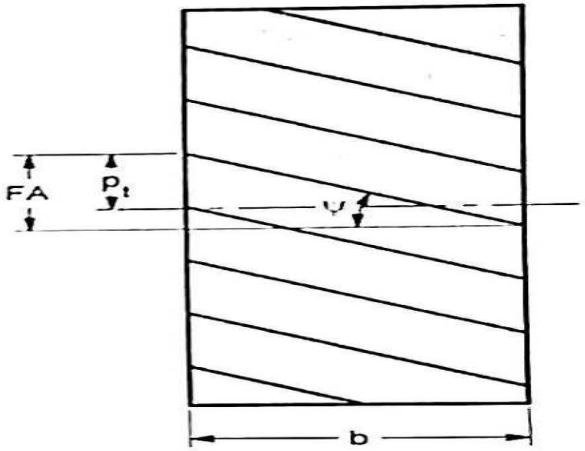

Fig. 2.4 : Face Width of Helical Gear

Atmiya University Rajkot

$$M_F = \frac{\text{Face advance}}{\text{Transverse circular pitch}} = \frac{FA}{p_t}$$

$$\text{or} \qquad M_F = \frac{b \tan \psi}{p_t} \qquad ...(2.9)$$

- In order to ensure the continuous contact in an axial plane as the gear rotates, the face or axial contact ratio should be greater than one. Mathematically,

$$M_F \geq 1 \qquad ...(2.10)$$

- Substituting Equation (2.9) in Equation (2.10),

$$\frac{b \tan \psi}{p_t} \geq 1$$

$$\therefore \qquad b \geq \frac{p_t}{\tan \psi}$$

or $$b \geq \frac{\pi m_t}{\tan \psi} \quad \text{...(2.11)}$$

- Substituting value of 'm_t' from Equation (2.5) in Equation (2.11),

$$b \geq \frac{\pi\, m_n}{\tan \psi \,.\, \cos \psi}$$

or $$b \geq \frac{\pi m_n}{\sin \psi} \quad \text{...(2.12)}$$

Generally, the minimum overlap of 15% is recommended.

- Hence Equation (2.12) becomes,

$$b \geq \frac{1.15\, \pi m_n}{\sin \psi} \quad \text{...(2.13)}$$

This is the minimum face width.

- It is important to note that, the **total contact ratio** (or simply the contact ratio) of the helical gear pair is the sum of **transverse contact ratio** and **face contact ratio.**
- The **transverse contact ratio** is the contact ratio in a plane of rotation, whereas the **face contact ratio** is the contact ratio in an axial plane. For spur gear pair the face contact ratio is zero.

Atmiya University Rajkot

8. Speed Ratio or Gear Ratio (G) :

It is the ratio of the number of teeth on gear to the number of teeth on pinion.

Let, G = speed ratio or gear ratio

z_p = number of teeth on pinion

z_g = number of teeth on gear

d_p = pitch circle diameter of pinion, mm

d_g = pitch circle diameter of gear, mm

n_p = pinion speed, r.p.m.

n_g = gear speed, r.p.m.

m_t = transverse module, mm

$$\therefore \quad G = \frac{z_g}{z_p} \quad \text{...(2.14)}$$

$$= \frac{m_t z_g}{m_t z_p} = \frac{d_g}{d_p}$$

or $$G = \frac{n_p}{n_g} \quad \text{...(2.15)}$$

9. Centre Distance (a) :

- It is the distance between the axes of the two mating gears. It is given by,

$$a = \frac{d_p + d_g}{2} = \frac{m_t z_p + m_t z_g}{2} = m_t\left[\frac{z_p + z_g}{2}\right]$$

$$= \frac{m_n}{\cos\psi}\left[\frac{z_p + z_g}{2}\right] = \frac{m_n}{\cos\psi}\left[\frac{z_p + Gz_p}{2}\right]$$

$$\text{or} \quad \mathbf{a = \frac{m_n z_p}{2\cos\psi}[1 + G]} \qquad ...(2.16)$$

Atmiya University Rajkot

10. Tooth Proportions :

- The tooth proportions used in helical gears are as follows:

addendum, $h_a = 1\, m_n$

dedendum, $h_f = 1.25\, m_n$

clearance, $C_L = 0.25 m_n$

A pair of helical gears consists of 18 teeth pinion meshing with 45 teeth gear. The normal module is 5 mm, while the normal pressure angle is 20° . If the helix angle is 23°, calculate :

(i) the transverse module;

(ii) the transverse pressure angle;

(iii) the axial pitch;

(iv) the pitch circle diameters of the pinion and the gear;

(v) the centre distance;

(vi) the addendum and dedendum circle diameters of the pinion; and

(vii) the gear ratio.

Atmiya University Rajkot

A pair of helical gears consists of 18 teeth pinion meshing with 45 teeth gear. The normal module is 5 mm, while the normal pressure angle is 20° . If the helix angle is 23°, calculate :

(i) the transverse module;

(ii) the transverse pressure angle;

(iii) the axial pitch;

(iv) the pitch circle diameters of the pinion and the gear;

(v) the centre distance;

(vi) the addendum and dedendum circle diameters of the pinion; and

(vii) the gear ratio.

Solution :

Given : $z_p = 18$; $z_g = 45$;

$m_n = 5$ mm ; $\phi_n = 20°$;

$\psi = 23°$.

Rajkot University

(i) Transverse module :

$$m_t = \frac{m_n}{\cos\psi} = \frac{5}{\cos 23} = 5.4318 \text{ mm}$$

$$m_t = \mathbf{5.4318\ mm}$$ **...Ans.**

(ii) Transverse pressure angle :

$$\tan\phi_t = \frac{\tan\phi_n}{\cos\psi} = \frac{\tan 20}{\cos 23}$$

or $$\tan\phi_t = 0.3954$$

$$\therefore \quad \phi_t = \tan^{-1}(0.3954) = 21.574°$$

$$\phi_t = \mathbf{21.574°}$$

(iii) Axial pitch :

$$p_a = \frac{p_t}{\tan\psi} = \frac{\pi m_t}{\tan\psi} = \frac{\pi \times 5.4318}{\tan 23} = 40.20 \text{ mm}$$

$$\mathbf{P_a = 40.20 \text{ mm}}$$

(iv) Pitch circle diameters :

$$d_p = m_t \cdot z_p = 5.4318 \times 18 = 97.77 \text{ mm}$$

$$d_g = m_t \cdot z_g = 5.4318 \times 45 = 244.43 \text{ mm}$$

$$\mathbf{d_p = 97.77 \text{ mm}}$$

$$\mathbf{d_g = 244.43 \text{ mm}}$$

(v) Centre distance :

$$a = \frac{(d_p + d_g)}{2} = \frac{97.77 + 244.43}{2}$$

or $$\mathbf{a = 171.1 \text{ mm}}$$

Atmiya University Rajkot

(vi) Addendum and dedendum circle diameters of pinion :

$$h_a = 1m_n = 5 \text{ mm}$$

$$h_f = 1.25m_n = 6.25 \text{ mm}$$

$$d_{pa} = d_p + 2\,h_a = 97.77 + 2 \times 5 = 107.77 \text{ mm}$$

$$d_{pf} = d_p - 2\,h_f = 97.77 - 2 \times 6.25 = 85.27 \text{ mm}$$

$$\mathbf{d_{pa} = 107.77 \text{ mm}}$$

$$\mathbf{d_{pf} = 85.27 \text{ mm}}$$

(vii) Gear ratio :

$$G = \frac{z_g}{z_p} = \frac{45}{18} = 2.5$$

$$\mathbf{G = 2.5}$$

2.5 EQUIVALENT SPUR GEAR AND VIRTUAL NUMBER OF TEETH

- The concept of **equivalent spur gear** is very useful in the design and analysis of helical gears.
- Helical gear is kinematically equivalent to an imaginary spur gear in a normal plane i.e. plane perpendicular to teeth.
- The imaginary spur gear in the normal plane, which is kinematically equivalent to the helical gear is obtained.
- In the design of the helical gear, the parameters of an equivalent spur gear are substituted in the spur gear formulae.

Atmiya University Rajkot

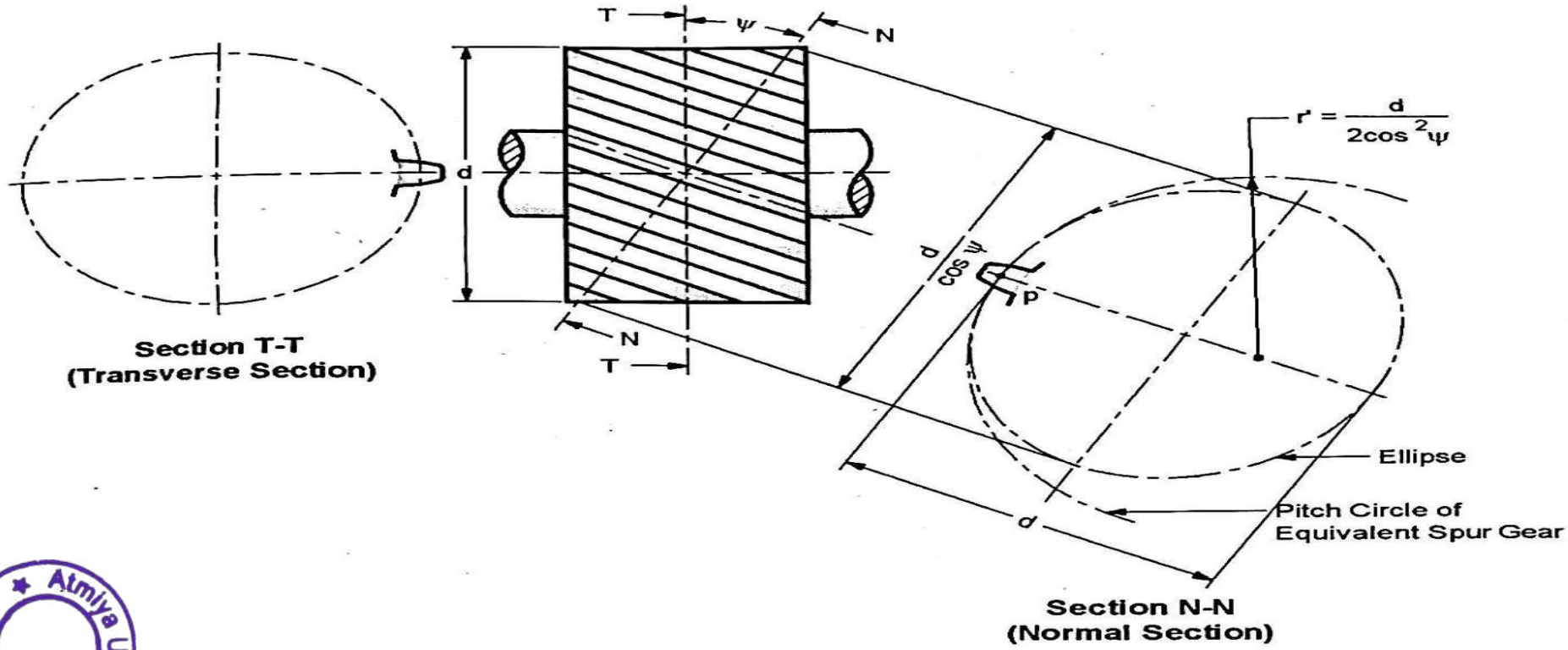

Fig. 2.5 : Equivalent Spur Gear

Atmiya University Rajkot

- The two important parameters of equivalent spur gear are :

1.	Pitch circle diameter (d′); and
2.	Number of teeth (z′).

1. Pitch circle diameter of equivalent spur gear (d′) :

- The pitch cylinder of the helical gear is cut by the plane N-N which is normal to the tooth as shown in Fig. 2.5.
- The corresponding section is an ellipse with : (i) major axis equal to $\frac{d}{\cos\psi}$; and (ii) minor axis equal to **d.**
- The profile of the helical gear tooth in the normal plane is same as that of a spur gear tooth having the pitch circle radius equal to the radius of curvature of the ellipse at point P, which is given by,

$$r' = \frac{(\text{Semi-major axis})^2}{\text{Semi -minor axis}} = \frac{\left(\frac{d}{2\cos\psi}\right)^2}{d/2}$$

or $$r' = \frac{d}{2\cos^2\psi} \quad ...(2.17)$$

- *Hence, the helical gear is equivalent to an imaginary spur gear, which is in the normal plane, having the pitch circle radius r' and the module m_n. This imaginary spur gear is termed as an* **equivalent spur gear** or **virtual spur gear** or **formative spur gear.**
- The pitch circle diameter of the equivalent or virtual or formative spur gear is given by,

$$d' = 2r' = \frac{d}{\cos^2\psi} \quad ...(2.18)$$

2. **Number of teeth on equivalent spur gear (z') :**
   - *The number of teeth z' on this equivalent spur gear is known* as **virtual** or **formative number of teeth.**
   - It is given by,

$$z' = \frac{\text{Pitch circle diameter of an equivalent spur gear, mm}}{\text{Module of an equivalent spur gear, mm}}$$

$$= \frac{d'}{m_n} = \frac{d/\cos^2\psi}{m_n} = \frac{d/\cos^2\psi}{m_t\cos\psi}$$

or $$z' = \frac{d}{m_t \cdot \cos^3\psi}$$

Atmiya University Rajkot

Substituting Equation (2.2) in above expression, we get,

$$z' = \frac{z}{\cos^3\psi} \quad ...(2.19)$$

where, z' = virtual or formative number of teeth
z = actual number of teeth on helical gear
ψ = helix angle.

2.6 MINIMUM NUMBER OF TEETH ON HELICAL PINION

- In order to avoid the interference in a helical gear pair, it must be ensured that the interference does not occur in an equivalent spur gear pair.
- The number of teeth required on an equivalent spur pinion to avoid the interference can be obtained by modifying Equation (1.15) [Chapter 1].

i.e. $$z'_p \geq \frac{2h_a}{m_n \sin^2\phi_n} \quad ...(2.20)$$

- Substituting value of z'_p from Equation (2.19) in Equation (2.20), we get,

$$\frac{z_p}{\cos^3\psi} \geq \frac{2h_a}{m_n \sin^2\phi_n}$$

$$\therefore \quad z_p \geq \frac{2h_a \cdot \cos^3\psi}{m_n \cdot \sin^2\phi_n} \quad ...(2.21)$$

- This Equation (2.21) gives the number of teeth required on the helical pinion to avoid the interference.

where, z'_p = virtual number of teeth on pinion or number of teeth on an equivalent spur pinion

z_p = number of teeth on helical pinion

h_a = addendum of the meshing rack, mm

m_n = normal module, mm

ϕ_n = normal pressure angle

ψ = helix angle

- Hence, the minimum number of teeth required on helical pinion to avoid the interference is given by,

$$z_{min} = \frac{2h_a \cdot \cos^3 \psi}{m_n \cdot \sin^2 \phi_n} \quad ...(2.22)$$

- From Equation (2.22), it is seen that the minimum number of teeth required on helical pinion to avoid the interference decreases with the increase in helix angle.

Atmiya University Rajkot

2.7 FORCE ANALYSIS OF HELICAL GEARS

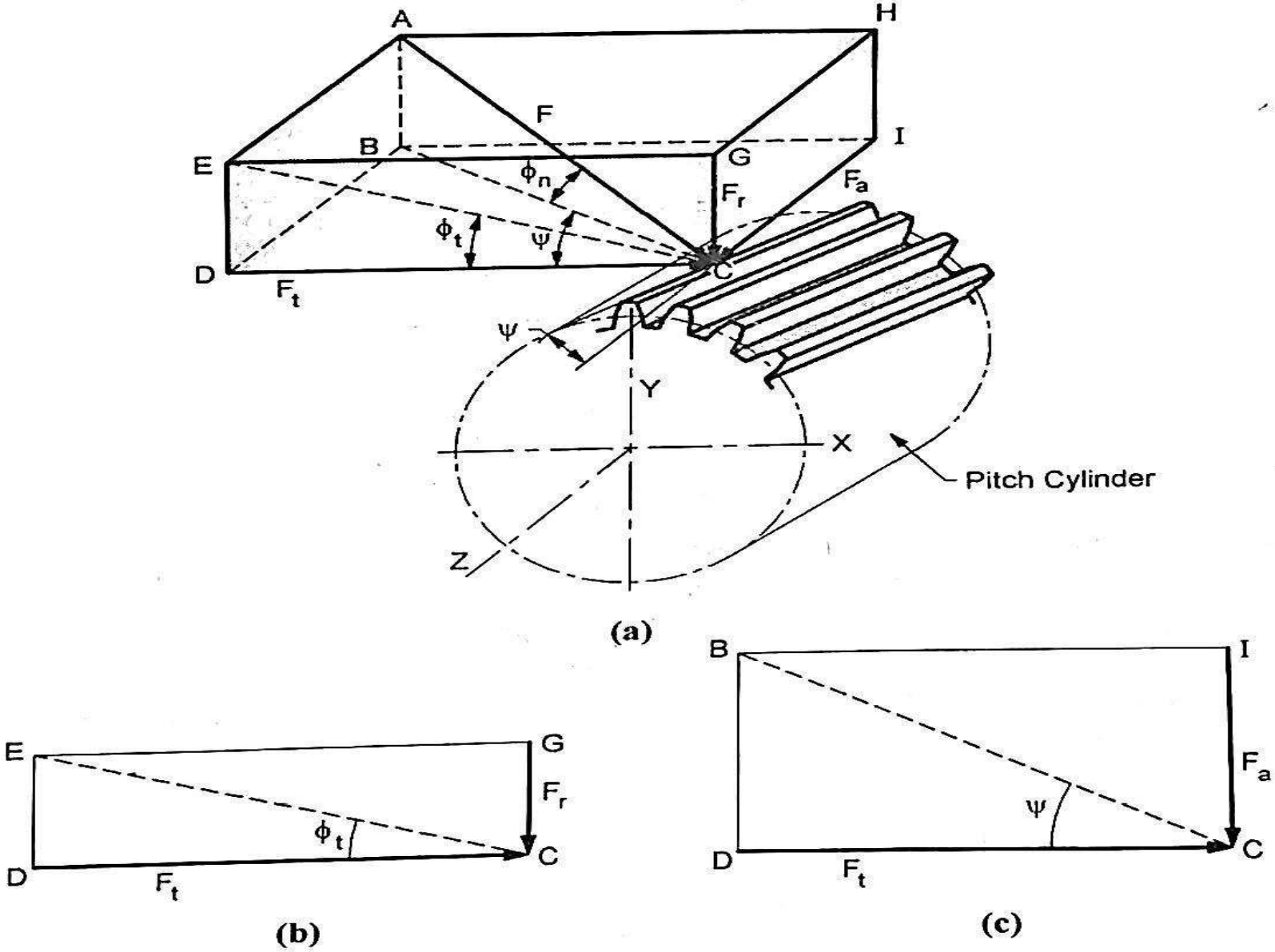

Fig. 2.6 : Forces Acting on Helical Gear Tooth

Atmiya University Rajkot

The resultant force 'F' acting on the helical gear tooth can be resolved, as shown in Fig. 2.6(a), into three components :

1. Tangential component or tangential force (F_t);
2. Radial component or radial force (F_r); and
3. Thrust component or axial force (F_a).

1. Tangential component or tangential force (F_t) :

- The tangential component is a useful component and is responsible for transmitting the torque or power.
- It is tangent to the pitch circle at pitch point.
- Its magnitude is given by,

$$F_t = \frac{P}{V} \quad ..(2.23)$$

Atmiya University Rajkot

or

$$F_t = \frac{T_p}{d_p/2} = \frac{T_g}{d_g/2} \quad ...(2.24)$$

where, F_t = tangential force, N

P = power transmitted, W

V = pitch line velocity, m/s

$$= \frac{\pi d_p n_p}{60 \times 1000} = \frac{\pi d_g n_g}{60 \times 1000} \quad ...(2.25)$$

T_p = torque acting on pinion, N-mm

T_g = torque acting on gear, N-mm

d_p = pitch circle diameter of pinion, mm

d_g = pitch circle diameter of gear, mm

n_p = pinion speed, r.p.m.

n_g = gear speed, r.p.m.

- *The tangential component of force acting on the driving gear opposes the rotation of the driving gear, whereas on the driven gear it assists the rotation.*

2.7 FORCE ANALYSIS OF HELICAL GEARS

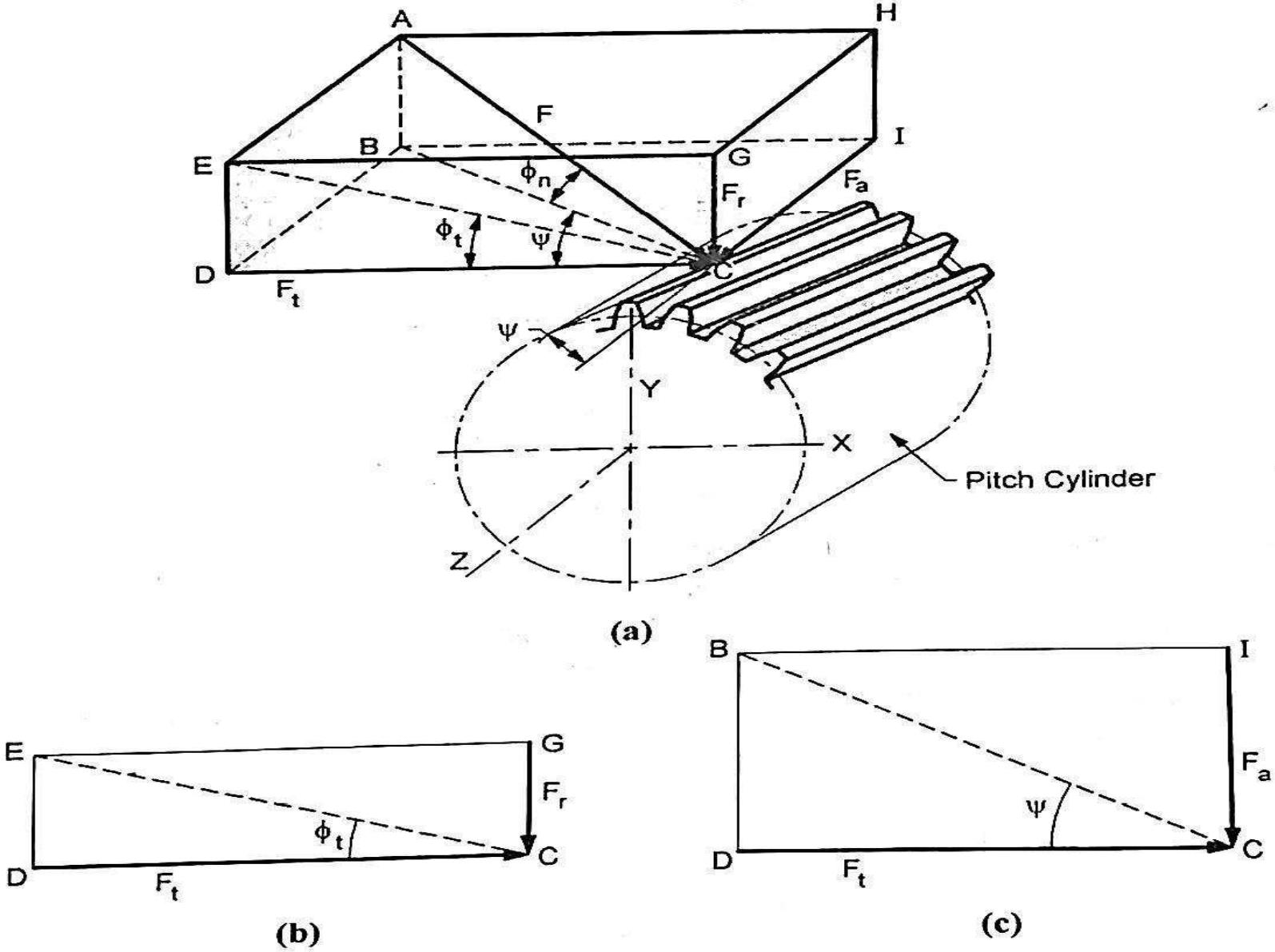

Fig. 2.6 : Forces Acting on Helical Gear Tooth

Atmiya University Rajkot

2. Radial component or radial force (F_r) :

- The radial component tends to separate the two gears. It acts along the radial line through the pitch point and is directed towards the centre.
- It is not useful component and serves no purpose.
- From Figs. 2.6(a) and 2.6(b),

$$\tan \phi_t = \frac{ED}{DC} = \frac{GC}{DC}$$

$$\therefore \quad \tan \phi_t = \frac{F_r}{F_t}$$

Atmiya University Rajkot

or

$$F_r = F_t \tan \phi_t \qquad ...(2.26)$$

Substituting Equation (2.7) in Equation (2.26),

$$F_r = \frac{F_t \cdot \tan \phi_n}{\cos \psi} \qquad ...(2.27)$$

where, F_r = radial force, N

ϕ_t = transverse pressure angle

ϕ_n = normal pressure angle

ψ = helix angle

2.7 FORCE ANALYSIS OF HELICAL GEARS

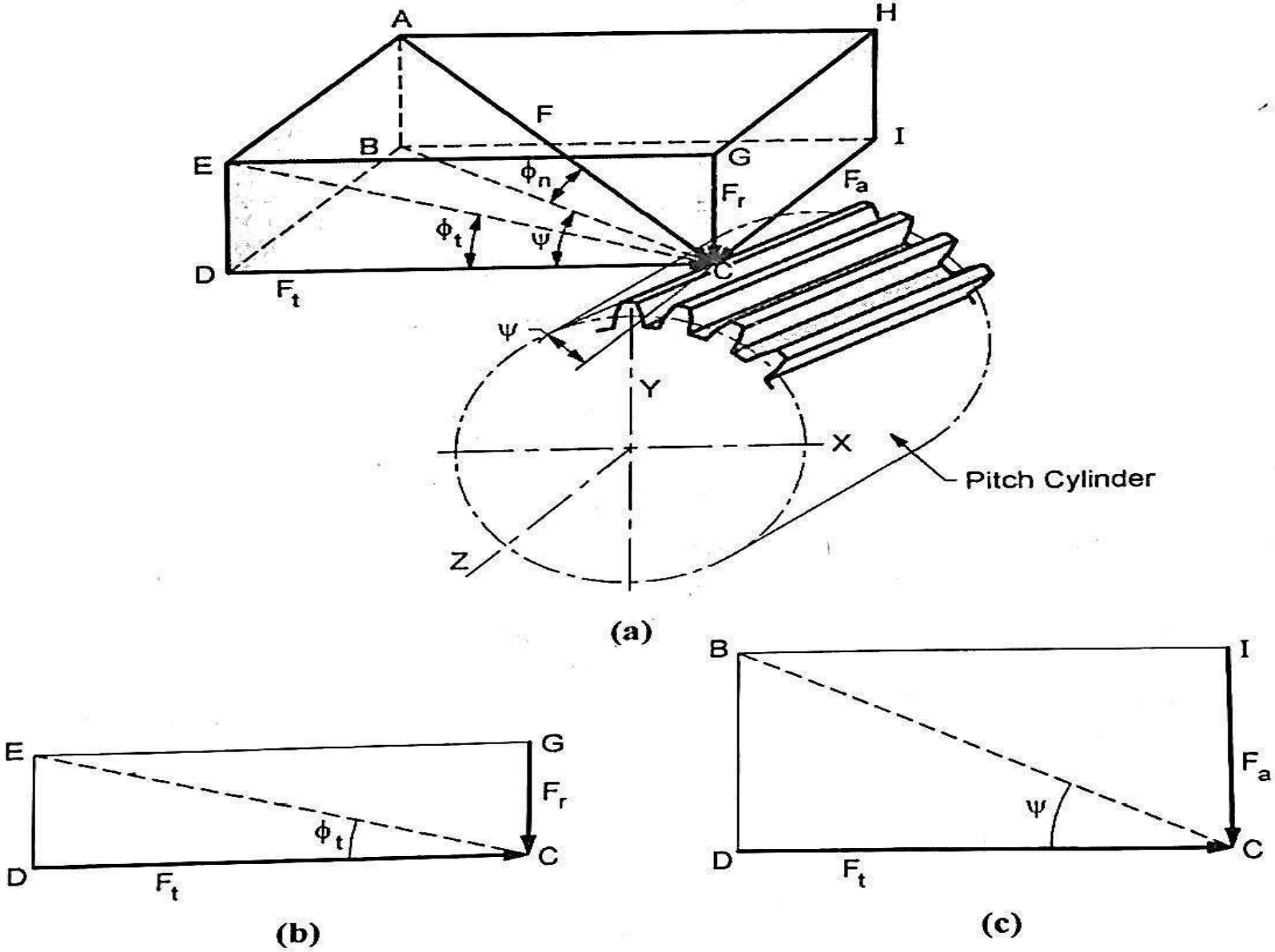

Fig. 2.6 : Forces Acting on Helical Gear Tooth

Atmiya University Rajkot

3. Thrust component or axial force (F_a) :

- The axial component acts in an axial direction. It is undesirable component.
- From Figs. 2.6(a) and 2.6(c),

$$\tan \psi = \frac{BD}{DC} = \frac{IC}{DC}$$

$$\therefore \quad \tan \psi = \frac{F_a}{F_t}$$

$$\text{or} \quad \mathbf{F_a = F_t \tan \psi} \qquad \text{...(2.28)}$$

where, F_a = axial component, N

- **Direction of thrust component or axial force :**

The direction of the axial component of force acting on the helical gear depends upon :

(i) Whether the gear under consideration is driving or driven gear,

(ii) The hand of the helix of gear under consideration, and

(iii) The direction of rotation of gear.

Atmiya University Rajkot

In order to find the direction of the thrust or axial component of force acting on any helical gear, apply the hand rule of the driving gear. If the driving gear is right hand helical gear, apply the right hand rule and if the driving gear is left hand helical gear, apply the left hand rule. Keep the fingers in the direction of rotation of gear and thumb will indicate the direction of thrust or axial component of force acting on the gear.

- The axial components acting on two meshing helical gears are equal in magnitudes and opposite in directions.
- Fig. 2.7 shows the different combinations of parallel helical gears in mesh and the corresponding directions of thrust or axial components.

4. Resultant force (F) :

The resultant force 'F' acting on the helical gear tooth is determined as follows

From Fig. 2.6(a),

$$F = \vec{AC} = \frac{\vec{BC}}{\cos\phi_n} = \frac{\vec{DC}}{\cos\phi_n \cdot \cos\psi}$$

$$\therefore \quad F = \frac{F_t}{\cos\phi_n \cdot \cos\psi} \qquad \text{...(2.29)}$$

$$\text{Again,} \quad F = \sqrt{F_t^2 + F_r^2 + F_a^2} \qquad \text{...(2.30)}$$

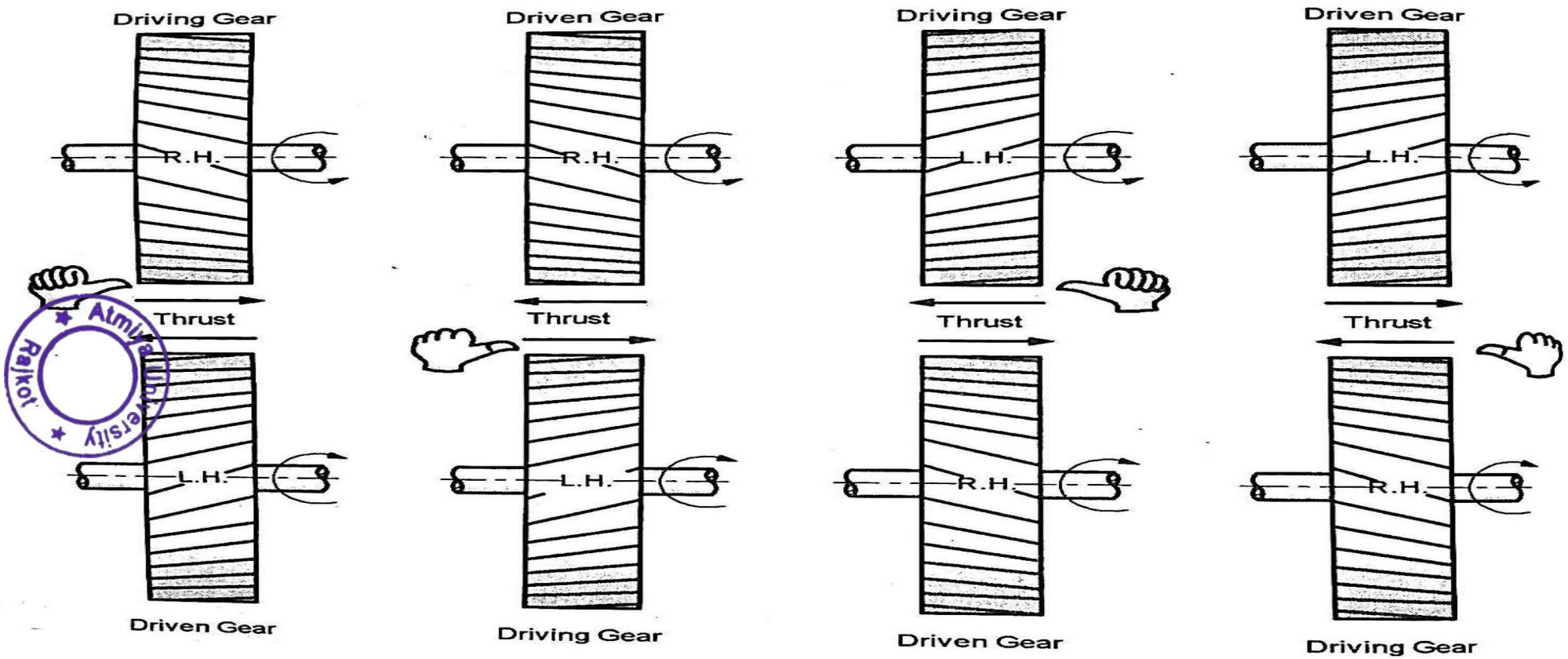

Atmiya University Rajkot

Fig. 2.7

2.7.1 Relation between Normal Pressure Angle (ϕ_n) and Transverse Pressure Angle (ϕ_t) :

- The relation between the normal pressure angle 'ϕ_n' and transverse pressure angle 'ϕ_t' is obtained as follows :

From Fig. 2.4(a),

$$AB = BC \tan\phi_n \qquad \text{...(a)}$$

and $\quad ED = DC \tan \phi_t$ ...(b)

Now, $\quad ED = AB$ ...(c)

- Substituting Equations (a) and (b) in Equation (c),

$$DC \tan \phi_t = BC \tan \phi_n$$

$$\tan \phi_t = \frac{\tan \phi_n}{DC/BC}$$

or $$\tan \phi_t = \frac{\tan \phi_n}{\cos \psi} \quad ...(2.31)$$

Atmiya University Rajkot

2.8 BEAM STRENGTH OF HELICAL GEAR TOOTH

- Helical gear is equivalent to an imaginary spur gear known as **virtual spur gear** in the plane perpendicular to the tooth element.
- In order to determine the beam strength of helical gear tooth, the helical gear is replaced by the virtual spur gear which is in a plane perpendicular to the tooth element.
- From Lewis equation [Equation (1.23), (Chapter)], referring Fig. 2.8, the beam strength of the virtual spur gear in the plane perpendicular to the tooth element (i.e. normal plane) is given by,

$$F_{bn} = \sigma_b \cdot b' \cdot m_n \cdot Y' \qquad ...(a)$$

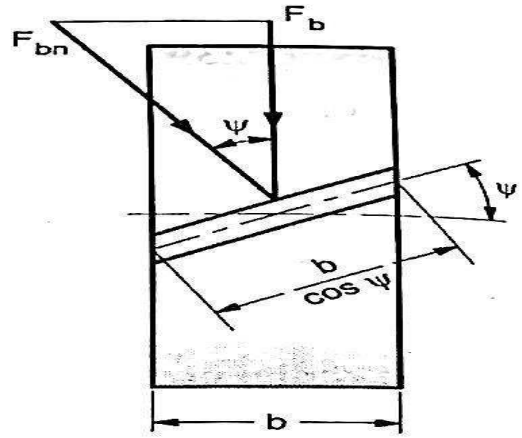

Fig. 2.8 : Beam Strength of Helical Gear Tooth

where, σ_b = bending endurance strength or permissible bending stress, N/mm^2

m_n = normal module, mm

Y' = Lewis form factor based on virtual number of teeth z'

b' = face width of the virtual spur gear, mm

$$b' = \frac{b}{\cos\psi} \qquad ...(b)$$

b = face width of the helical gear, mm

ψ = helix angle.

Atmiya University Rajkot

- Substituting Equation (b) in Equation (a),

$$F_{bn} = \frac{\sigma_b \cdot b \cdot m_n \cdot Y'}{\cos\psi} \qquad ...(c)$$

- The component of F_{bn} in the plane of rotation is given by,

$$F_b = F_{bn} \cos\psi \qquad ...(d)$$

- Substituting Equation (c) in Equation (d), we get,

$$F_b = \frac{\sigma_b \cdot b \cdot m_n \cdot Y'}{\cos\psi} \cdot \cos\psi$$

or

$$F_b = \sigma_b \cdot b \cdot m_n \cdot Y' \qquad ...(2.32)$$

This Equation (2.32) is known as **Lewis equation for beam strength of the helical gear tooth.**

2.8.1 Lewis Form Factor Based on Virtual Number of Teeth (Y′) :

- The values of Lewis form factor based on virtual number of teeth Y' for different tooth systems are given in Table 1.8 (Chapter 1).

- If the table for the values of Lewis form factor Y' is not available, then the approximate values of Lewis form factor Y' can be calculated by empirical relations given below :

$$\left.\begin{aligned} Y' &= 0.484 - \frac{2.87}{z'} && \text{for } 20^\circ \text{ full-depth involute} \\ Y' &= 0.55 - \frac{2.64}{z'} && \text{for } 20^\circ \text{ stub involute} \\ Y' &= 0.39 - \frac{2.15}{z'} && \text{for } 14.5^\circ \text{ full-depth involute and composite.} \end{aligned}\right\} \quad \text{...(2.33)}$$

2.8.2 Bending Endurance Strength :

The bending endurance strength or permissible bending stress for gear or pinion is given by,

$$\sigma_b = \frac{S_{ut}}{3} \quad \text{...(2.34)}$$

where, S_{ut} = ultimate tensile strength, N /mm^2

2.8.3 Face Width :

Atmiya University Rajkot

Referring Equation (2.13),

$$b \geq \frac{1.15\,\pi\, m_n}{\sin \psi} \quad \text{...(2.35)}$$

Again $$9m_n \leq b \leq 15m_n \quad \text{...(2.36)}$$

Generally, the face width **'b'** of the helical gear is selected such that it satisfies both the Equations (2.35) and (2.36).

2.8.4 Weaker of Gear and Pinion :

- The product $(\sigma_b \times Y')$ decides the weaker member between the gear and pinion in bending.
- **If $(\sigma_b \times Y')_{pinion} < (\sigma_b \times Y')_{gear}$: pinion is weaker in bending.**
- **If $(\sigma_b \times Y')_{pinion} > (\sigma_b \times Y')_{gear}$: gear is weaker in bending.**
- When the gear and pinion are made of the same material, then pinion is always weaker, because, Y' is lesser for pinion as compared to gear and σ_b is same for both members.

2.9 WEAR STRENGTH OF HELICAL GEAR TOOTH

- Similar to the beam strength, the wear strength of the helical gear tooth can be determined by replacing the helical gear pair by the virtual spur gear pair in a plane perpendicular to the tooth element.
- From Buckingham's equation for wear strength [Equation (1.27), (Chapter 1)], referring Fig. 2.9, the wear strength of the virtual spur gear in the plane perpendicular to the tooth element (i.e. normal plane) is given by,

$$F_{wn} = d'_p \cdot b' \cdot Q' \cdot K' \qquad \text{...(a)}$$

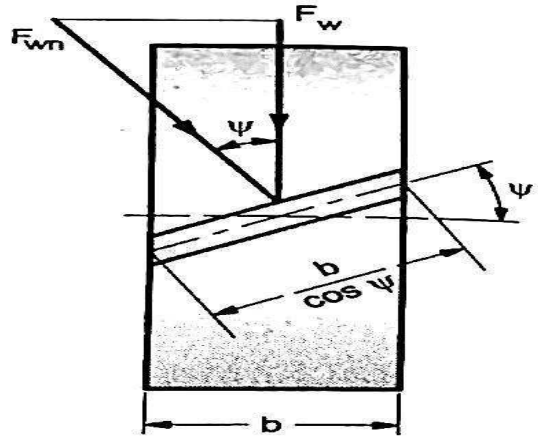

Fig. 2.9 : Wear Strength of Helical Gear Tooth

Where, d'_p = pitch circle diameter of the virtual spur pinion, mm

$$= \frac{d_p}{\cos^2\psi} \qquad \text{...(b)}$$

b' = face width of the virtual spur gear / pinion, mm

$$= \frac{b}{\cos\psi} \qquad \text{...(c)}$$

Q' = ratio factor for virtual spur gear pair

$$= \frac{2z'_g}{z'_g + z'_p} = \frac{\dfrac{2z_g}{\cos^3\psi}}{\dfrac{z_g}{\cos^3\psi} + \dfrac{z_p}{\cos^3\psi}}$$

$$= \frac{2z_g}{z_g + z_p} = Q \qquad \text{...(d)}$$

K' = load-stress factor, N / mm²

$$= \frac{\sigma_C^2 \sin\phi_n \cdot \cos\phi_n \left[(1-\nu_p^2)/E_p + (1-\nu_g^2)/E_q\right]}{1.2732}$$

$$= K \qquad \text{...(e)}$$

- Substituting Equations (b), (c), (d) and (e) in Equation (a),

$$F_{wn} = \frac{d_p}{\cos^2\psi} \cdot \frac{b}{\cos\psi} \cdot Q \cdot K$$

Atmiya University Rajkot

$$F_{wn} = \frac{d_p \cdot b \cdot Q \cdot K}{\cos^3\psi} \quad ...(f)$$

- The component of F_{wn} in the plane of rotation is given by,

$$F_{wn} = F_{wn} \cdot \cos\psi \quad ...(g)$$

- Substituting Equation (f) in Equation (g),

$$F_w = \frac{d_p \cdot b \cdot Q \cdot K}{\cos^3\psi} \cdot \cos\psi$$

$$\boxed{F_w = \frac{d_p \cdot b \cdot Q \cdot K}{\cos^2\psi}} \quad ...(2.37)$$

Equation (2.37) is known as **Buckingham's equation for wear strength of the helical gear tooth.**

where, d_p = pitch circle diameter of helical pinion, mm

b = face width of helical gear/pinion, mm

Q = ratio factor for helical gear pair

$$\left.\begin{aligned} &= \frac{2\,z_g}{z_g + z_p} && \text{for external helical gear pair} \\ &= \frac{2\,z_g}{z_g - z_p} && \text{for internal helical gear pair} \end{aligned}\right\} \quad ...(2.38)$$

K = load-stress factor for a helical gear pair, N/mm^2

$$= \frac{\sigma_C^2 \sin\phi_n \cdot \cos\phi_n \left[(1-\nu_p^2)/E_p + (1-\nu_g^2)/E_q \right]}{1.2732} \quad ...(2.39)$$

σ_C = surface endurance strength of weaker surface, N/mm^2

E_p, E_g = modulii of elasticity of pinion and gear materials respectively, N/mm^2

ν_p, ν_g = Poisson's ratio of pinion and gear materials respectively,

ϕ_n = normal pressure angle.

Atmiya University Rajkot

- The simplified expressions for load-stress factor K for different pinion and gear material combinations and 20° normal pressure angle are as follows [refer section 1.12.1, (Chapter 1)] :

1. Steel pinion and steel gear :

   $K = 0.16\,[BHN / 100]^2$, N/mm^2

2. Cast iron pinion and cast iron gear :

   $K = 0.21\,[BHN / 100]^2$, N/mm^2

3. Steel pinion and cast iron gear :

   $K = 0.18\,[BHN / 100]^2$, N/mm^2

...(2.40)

2.10 EFFECTIVE LOAD ON HELICAL GEAR TOOTH

Effective load *on the helical gear tooth is the total maximum tangential force acting on the helical gear tooth.*

The theoretical tangential force acting on the helical gear tooth due to power transmitted is given by,

$$\left.\begin{aligned} F_t &= \frac{P}{V} \\ &= \frac{T_g}{d_g/2} = \frac{T_p}{d_p/2} \end{aligned}\right\} \qquad \text{...(2.41)}$$

where, F_t = theoretical tangential force acting on the helical gear tooth, N

T_p, T_g = torque acting on the pinion and gear respectively, N-mm

d_p, d_g = pitch circle diameters of pinion and gear respectively, mm

P = power transmitted, W

V = pitch line velocity, m/sec $= \dfrac{\pi d_p n_p}{60 \times 1000} = \dfrac{\pi d_g n_g}{60 \times 1000}$

n_p, n_g = pinion and gear speeds respectively, r.p.m.

The theoretical tangential force given by Equation (2.41) depends upon the rated power and rated speed. In addition to this, the other factors to be accounted in the estimation of the effective load are as follows :

1. Fluctuation of Torque Due to Prime-Mover and Driven Machine
2. Non-Uniform Distribution of Load Across Face Width; and
3. Dynamic Load.

Atmiya University Rajkot

2.10.1 Fluctuation of Torque Due to Prime-Mover and Driven Machine :

- As discussed in section 1.13.2 (Chapter 1), the fluctuation of torque because of prime mover and driven machine is accounted by the application factor or service factor 'K_a'.
- The values of the application factor or service factor are given in Table 1.9 [Section 1.13.2 (Chapter 1)].

2.10.2 Non-uniform Distribution of Load Across Face Width :

- As discussed in section 1.13.2 (Chapter 1), the non-uniform distribution of load across the face width is accounted by the load distribution factor 'K_m'.
- Because of the nature of contact, the helical gears are slightly less sensitive to the mounting conditions, and hence the load distribution factor for helical gears is lower than that for the spur gears.
- Table 2.2 gives the values of the load distribution factor 'K_m'.

Table 2.2 : Load Distribution Factor K_m for Helical Gears

Sr. No	Characteristics of Support	Face Width, mm			
		upto 50	upto 150	upto 225	upto 400
1.	Accurate mountings, small bearing clearances, minimum deflection, precision gears	1.2	1.3	1.4	1.7
2.	Less rigid mountings, less accurate gears, contact across the full face	1.5	1.6	1.7	2.0
3.	Accuracy and mounting such that less than full face contact exists	Over 2.0			

2.10.3 Dynamic Load :

- As discussed in Section 1.13.3 (Chapter 1), there are two basic methods to account for the dynamic load.

1. Preliminary estimation by velocity factor,
2. Precise estimation by Buckingham's equation.

1. Preliminary estimation of dynamic load by velocity factor :

Atmiya University Rajkot

- Due to the nature of contact, the dynamic load on helical gears is slightly less than that on spur gears.
- The velocity factors for various accuracy levels of helical gears are given in Table 2.3 :

Table 2.3 : Velocity Factor K_v for Helical Gears

IS Grades	Accuracy Level	Manufacturing Methods	Permissible Pitch Line Velocity, 'V' m/s	Velocity Factor, K_v
6, 7, 8 or 9	Medium Accuracy	Gears manufactured by hobbing followed by shaving.	$V < 30$	$\frac{5.6}{5.6 + \sqrt{V}}$
4 or 5	High Accuracy	Gears finished by shaving followed by grinding.	$V \geq 30$	$\sqrt{\frac{5.6}{5.6 + \sqrt{V}}}$
1, 2, or 3	Ultra High Accuracy	Gears finished by fine grinding followed by honing.	$40 < V < 200$	0.85 to 0.95

- Hence, the effective load between the meshing teeth in tangential direction is given by,

$$F_{eff} = \frac{K_a \cdot K_m \cdot F_t}{K_v} \quad \text{...(2.42)}$$

or

$$F_{eff} = \frac{K_a \cdot K_m}{K_v} \cdot \frac{P}{V} \quad \text{...(2.43)}$$

2. Precise estimation of dynamic load by Buckingham's equation :

- In the final stages of the gear design, when gear dimensions are known as well as gear pair teeth error are specified, the dynamic load on the helical gear tooth can be more precisely determined as an incremental load by using Buckingham's equation.
- The Buckingham's equation for the dynamic load on helical gear tooth in tangential direction is given by,

$$F_d = \frac{21V\,[\,bC\cos^2\psi + F_{t\,max}\,]\cos\psi}{21V + \sqrt{bC\cos^2\psi + F_{t\,max}}} \quad \text{...(2.44)}$$

where,

F_d = dynamic load, N

$F_{t\,max}$ = maximum tangential force, N

= $K_a \cdot K_m \cdot F_t$

F_t = tangential force, N

K_a = application factor or service factor

K_m = load distribution factor or load concentration factor

V = pitch line velocity, m/s

b = face width, mm

C = deformation factor or dynamic factor N/mm.

Atmiya University Rajkot

- The deformation factor or dynamic factor depends upon the accuracy of gear teeth, the material of the meshing gears, and the tooth form. It is given by,

$$C = \frac{K \cdot e}{\left(\frac{1}{E_p} + \frac{1}{E_g}\right)} = K \cdot e\left[\frac{E_p \cdot E_g}{E_p + E_g}\right] \quad \text{...(2.45)}$$

E_p, E_g = modulli of elasticity of pinion and gear material respectively, N / mm^2

e = sum of errors on the meshing teeth, mm

K = factor depending upon the tooth form.

= 0.111 for 20° full-depth involute,

= 0.115 for 20° stub-tooth involute,

= 0.107 for 14.5° full-depth involute and composite system

- The effective load between the meshing helical gear teeth in tangential direction is given by,

$$F_{eff} = K_a \cdot K_m \cdot F_t + F_d \quad ...(2.46)$$

(i) Deformation factor or dynamic factor (C) :

The simplified expression for deformation factor 'C' for different pinion and gear material combinations and 20° pressure angle are as follows :

- **Steel pinion and steel gear :**

$$C = 11500\ e,\ N/mm \quad ...(2.47)$$

- **Cast iron pinion and cast iron gear :**

$$C = 8900\ e,\ N/mm \quad ...(2.48)$$

- **Steel pinion and cast iron gear :**

$$C = 10000\ e,\ N/mm \quad ...(2.49)$$

(ii) Pitch errors on meshing teeth (e) :

- Sum of the pitch errors on two meshing teeth is given by,

$$e = e_p + e_g \quad ...(2.50)$$

where, e_p = pitch error for pinion teeth, mm

e_g = pitch error for gear teeth, mm.

Atmiya University Rajkot

- The pitch error depends upon the gear grade, the gear size, and the tooth size. The expected pitch error on the gear or pinion tooth is considered to be equal to tolerance.
- The tolerances for adjacent pitch error 'e' for different gear grades are given in Table 1.14. [Section 1.13.7 (Chapter 1)]
- Referring Table 1.14 [section 1.13.7 (Chapter 1)],

$$\phi_p = m_n + 0.25\sqrt{d} \quad ...(2.51)$$

= tolerance factor

where, m_n = normal module of helical gear, mm

d = pitch circle diameter, mm

2.11 SAFETY OF HELICAL GEAR PAIR

1. Safety Against Bending Failure :

- In order to avoid the bending failure or tooth breakage, the beam strength of the helical gear tooth must be greater than the effective load between the meshing teeth. Therefore,

$$F_b > F_{eff} \quad ...(2.52)$$

- Introducing factor of safety,

$$F_b = N_f \cdot F_{eff} \quad ...(2.53)$$

2. Safety Against Wear Failure :

- In order to avoid the pitting failure or wear failure, the wear strength of the gear tooth must be greater than the effective load between the meshing teeth.

Therefore, $$F_w > F_{eff} \quad ...(2.54)$$

- Introducing factor of safety,

$$F_w = N_f \cdot F_{eff} \quad ...(2.55)$$

where, N_f = factor of safety.

Atmiya University Rajkot

- Normally, the recommended factor of safety for gears is between 1.5 and 2. In some critical applications, it can be upto 3.

Problems

Example 2.5 :

A helical pinion having 21 teeth to be made of plain carbon steel 55C8 (S_{ut} = 720 N/mm^2) is to mesh with a gear to be made of plain carbon steel 40C8 (S_{ut} = 580 N/mm^2). The gear pair is required to transmit 10 kW power from an electric motor running at 1000 r.p.m. to a machine running at 300 r.p.m. The starting torque of the motor is 125% of the rated torque. The factor of safety required is 1.25. The face width is 10 times the normal module and tooth system is 20° full-depth involute. The helix angle is 25°. The gears are to be machined to meet the specifications of grade 6. The gear and pinion are to be case hardened to 300 BHN and 350 BHN respectively. Design the gear pair by using the velocity factor and Buckingham's equation for dynamic load. The deformation factor 'C' for gear pair is 11500 e, N/mm.

Use the following relations :

$$Y' = 0.484 - \frac{2.87}{z'}$$

$$K_v = \frac{5.6}{5.6 + \sqrt{V}}$$

$$K = 0.16\left[\frac{BHN}{100}\right]^2, \text{ N/mm}^2$$

$$F_d = \frac{21\,V\,[bC\cos^2\psi + F_{tmax}]\cos\psi}{21\,V + \sqrt{bC\cos^2\psi + F_{tmax}}}, \text{ N}$$

For grade 6, $e = 8.0 + 0.63\,[m_n + 0.25\sqrt{d}\,]$, μm.

Solution :

Given :

S_{up}	= 720 N/mm^2	;	S_{ug}	= 580 N/mm^2 ;
n_p	= 1000 r.p.m	;	n_g	= 300 r.p.m.;
K_a	= 1.25	;	N_f	= 1.25 ;
z_p	= 21	;	P	= 10,000 W ;
b	= $10m_n$	;	ϕ_n	= 20° ;
$(BHN)_g$	= 300	;	$(BHN)_p$	= 350 ;
ψ	= 25°	;	C	= 11500 e N/mm.

- **Beam strength :**

$$\sigma_{bp} = \frac{S_{up}}{3} = \frac{720}{3} = 240 \text{ N/mm}^2$$

$$\sigma_{bg} = \frac{S_{ug}}{3} = \frac{580}{3} = 193.33 \text{ N/mm}^2$$

$$G = \frac{n_p}{n_g} = \frac{z_g}{z_p}$$

$$\therefore \quad \frac{1000}{300} = \frac{z_g}{21}$$

or $$z_g = 70$$

$$z'_p = \frac{z_p}{\cos^3\psi} = \frac{21}{\cos^3 25} = 28.2$$

$$z'_g = \frac{z_g}{\cos^3\psi} = \frac{70}{\cos^3 25} = 94.03$$

$$Y'_p = 0.484 - \frac{2.87}{z'_p} = 0.484 - \frac{2.87}{28.2} = 0.3822$$

$$Y'_g = 0.484 - \frac{2.87}{z'_g} = 0.484 - \frac{2.87}{94.03} = 0.4534$$

$$\sigma_{bp} \cdot Y'_p = 240 \times 0.3822 = 91.73 \text{ N/mm}^2$$

$$\sigma_{bg} \cdot Y'_g = 193.33 \times 0.4534 = 87.65 \text{ N/mm}^2$$

As $\sigma_{bp} \cdot Y'_g < \sigma_{bp} \cdot Y'_p$, gear is weaker than pinion in bending. Hence, it is necessary to design gear for bending.

$$\therefore \quad F_b = \sigma_{bg} \cdot b \cdot m_n \cdot Y'_g$$

$$= 193.33 \times 10\, m_n \times m_n \times 0.4534$$

or $$F_b = 876.558\, m_n^2 \text{, N} \qquad \text{...(a)}$$

Atmiya University Rajkot

- **Wear strength :**

$$d_p = m_t z_p = \frac{m_n z_p}{\cos\psi} = \frac{m_n \times 21}{\cos 25} = 23.171\, m_n$$

$$Q = \frac{2z_g}{z_g + z_p} + \frac{2 \times 70}{70 + 21} = 1.5384$$

$$K = 0.16\,[\text{BHN} / 100]^2$$

$$= 0.16\,[300 / 100]^2 = 1.44 \text{ N/mm}^2$$

$$F_w = \frac{d_p \cdot b \cdot Q \cdot K}{\cos^2\psi}$$

$$= \frac{23.171 m_n \times 10\, m_n \times 1.5384 \times 1.44}{\cos^2 25}$$

or $$F_w = 624.92\, m_n^2 \text{, N} \qquad \text{...(b)}$$

As $F_w < F_b$, gear pair is weaker in pitting, and hence it should be designed for the safety against pitting failure.

- **Effective load :**

$$V = \frac{\pi d_p n_p}{60 \times 1000} = \frac{\pi \times 23.171 m_n \times 1000}{60 \times 1000} = 1.2132 m_n \text{, m/s}$$

$$F_t = \frac{P}{V} = \frac{10000}{1.2132 m_n} = \frac{8242.45}{m_n}, \text{ N} \qquad \text{...(c)}$$

$$K_v = \frac{5.6}{5.6 + \sqrt{V}} = \frac{5.6}{5.6 + \sqrt{1.2132 m_n}}$$

$$F_{eff} = \frac{K_a \cdot K_m \cdot F_t}{K_v} = \frac{1.25 \times 1}{\left(\frac{5.6}{5.6 + \sqrt{1.2132 m_n}}\right)} \times \frac{8242.45}{m_n}$$

or $$F_{eff} = \frac{1839.83\,(5.6 + 1.101\sqrt{m_n})}{m_n}, \text{ N} \qquad \text{...(d)}$$

- **Estimation of module :**

In order to avoid the pitting failure,

$$F_w = N_f \cdot F_{eff}$$

$$624.92\, m_n^2 = \frac{1.25 \times 1839.83\,(5.6 + 1.101\sqrt{m_n})}{m_n}$$

$$m_n^3 = 20.609 + 4.0518\sqrt{m_n}$$

Solving above equation by trial and error, we get,

$$m_n \approx 3.1 \text{ mm}$$

From Table 2.1, the standard value of module under first choice is 4 mm.

Atmiya University Rajkot

- **Dimensions of gear pair :**

$$m_n = 4 \text{ mm};$$

$$m_t = \frac{m_n}{\cos\psi} = \frac{4}{\cos 25} = 4.4135 \text{ mm};$$

$$z_p = 21;$$

$$z_g = 70;$$

$$b = 10\, m_n = 10 \times 4 = 40 \text{ mm};$$

$$d_p = m_t z_p = 4.4135 \times 21 = 92.68 \text{ mm};$$

$$d_g = m_t \cdot z_g = 4.4135 \times 70 = 308.94 \text{ mm};$$

$$a = (d_p + d_g)/2 = (92.68 + 308.94)/2 = 200.81 \text{mm};$$

$$h_a = 1 m_n = 4 \text{ mm};$$

$$h_f = 1.25 m_n = 5 \text{ mm.} \qquad \text{...Ans.}$$

- **Precise estimation of dynamic load by Buckingham's equation (check for design) :**

For grade 6, $$e = 8.0 + 0.63\,[m_n + 0.25\sqrt{d}]$$

For pinion, $$e_p = 8.0 + 0.63\,[m_n + 0.25\sqrt{d_p}]$$

$$= 8.0 + 0.63\,[4 + 0.25\sqrt{92.68}]$$

$$= 12.036\ \mu\text{m}$$

For gear, $e_g = 8.0 + 0.63\,[m_n + 0.25\sqrt{d_g}\,]$

$= 8.0 + 0.63\,[4 + 0.25\sqrt{308.94}\,]$

$= 13.288\ \mu m$

$\therefore\ e = e_p + e_g = 12.036 + 13.288 = 25.32\ \mu m$

$= 25.32 \times 10^{-3}$ mm

The Buckingham's equation for dynamic load in tangential direction is given by,

$$F_d = \frac{21V\,[bC\cos^2\psi + F_t\,max]\cos\psi}{21\,V + \sqrt{bC\cos^2\psi + F_{t\,max}}}$$

Now, $F_t = \dfrac{8242.45}{m_n} = \dfrac{8242.45}{4} = 2060.61$ N

$F_{t\,max} = K_a \cdot K_m \cdot F_t = 1.25 \times 2060.61 = 2575.76$ N

$V = 1.2132\ m_n = 1.2132 \times 4 = 4.8528$ m/s

$C = 11500\ e = 11500 \times 25.32 \times 10^{-3} = 291.18$ N/mm

$$F_d = \frac{21 \times 4.8528\,[40 \times 291.18 \times \cos^2 25 + 2575.76]\cos 25}{21 \times 4.8528 + \sqrt{40 \times 291.18 \times \cos^2 25 + 2575.76}}$$

or $F_d = 5287.57$ N ...(e)

Available factor of safety :

$F_{eff} = K_a \cdot K_m \cdot F_t + F_d = 1.25 \times 1 \times 2060.61 + 5287.57$

or $F_{eff} = 7863.33$ N ...(f)

From Equation (b),

$F_w = 624.92\ m_n^2 = 624.92 \times (4)^2$

or $F_w = 9998.72$ N ...(g)

Hence, the available factor of safety is,

$$N_f = \frac{F_w}{F_{eff}} = \frac{9998.72}{7863.33}$$

or $N_f = 1.27 > 1.25$

As the available factor of safety is higher than the required factor of safety, the design is safe.

Atmiya University Rajkot

Example 2.6 :

A pair of parallel helical gears consist of 20 teeth pinion meshing with 100 teeth gear. The pinion rotates 720 r.p.m. The normal pressure angle is 20°, while the helix angle is 25°. The face width is 40 mm and normal module is 4 mm. The pinion is made of plain carbon steel 55C8 (S_{ut} = 720 N/mm^2) while the gear is made of plain carbon steel 40C8 (S_{ut} = 580 N/mm^2). The pinion and gear are heat treated to a surface hardness of 350 BHN and 300 BHN respectively. The service factor and factor of safety are 1.5 and 2.0

respectively. Assuming the velocity factor accounts for dynamic load, calculate the power transmitting capacity of helical gear pair.

Use the following relations :

$$Y' = 0.484 - \frac{2.87}{z'}$$

$$K_v = \frac{5.6}{5.6 + \sqrt{V}}$$

$$K = 0.16 \left[\frac{BHN}{100}\right]^2, \text{ N/mm}^2$$

Solution :

Given :

z_p	= 20	;	z_g	= 100;
n_p	= 720 r.p.m	;	ϕ_n	= 20° ;
ψ	= 25°	;	b	= 40 mm;
m_n	= 4 mm	;	S_{up}	= 720 N/mm²;
S_{ug}	= 580 N/mm²	;	$(BHN)_p$	= 350;
$(BHN)_g$	= 300	;	K_a	= 1.5;
N_f	= 2.0.			

- **Beam strength :**

Atmiya University Rajkot

$$z'_p = \frac{z_p}{\cos^3\psi} = \frac{z_p}{\cos^3 25} = 26.86$$

$$z'_g = \frac{z_g}{\cos^3 25} = \frac{100}{\cos^3 25} = 134.33$$

$$Y'_p = 0.484 - \frac{2.87}{z'_p} = 0.484 - \frac{2.87}{26.86} = 0.3771$$

$$Y'_g = 0.484 - \frac{2.87}{z'_g} = 0.484 - \frac{2.87}{134.33} = 0.4626$$

$$\sigma_{bp} = \frac{S_{up}}{3} = \frac{720}{3} = 240 \text{ N/mm}^2$$

$$\sigma_{bg} = \frac{S_{ug}}{3} = \frac{580}{3} = 193.33 \text{ N/mm}^2$$

$$\sigma_{bp} \cdot Y'_p = 240 \times 0.3771 = 90.5 \text{ N/mm}^2$$

$$\sigma_{bg} \cdot Y'_g = 193.33 \times 0.4626 = 89.43 \text{ N/mm}^2$$

As $\sigma_{bg} \cdot Y'_g < \sigma_{bp} \cdot Y'_p$, gear is weaker than pinion in bending. Hence, it is necessary to design gear for bending.

$$F_b = \sigma_{bg} \cdot b \cdot m_n \cdot Y'_g$$

$$= 193.33 \times 40 \times 4 \times 0.4626$$

$$\text{or} \quad F_b = 14309.51\text{N} \qquad \text{...(a)}$$

- **Wear strength :**

$$d_p = m_t z_p = \frac{m_n \cdot z_p}{\cos\psi} = \frac{4 \times 20}{\cos 25} = 88.27 \text{ mm}$$

$$Q = \frac{2z_p}{z_g + z_p} = \frac{2 \times 100}{100 + 20} = 1.6667$$

$$K = 0.16\,[\,BHN / 100\,]^2 = 0.16\,[300 / 100]^2 = 1.44 \text{ N/mm}^2$$

$$F_w = \frac{d_p \cdot b \cdot Q \cdot K}{\cos^2\psi} = \frac{88.27 \times 40 \times 1.6667 \times 1.44}{\cos^2 25}$$

$$\text{or} \quad F_w = 10316.72 \text{ N} \qquad \text{...(b)}$$

As $F_w < F_b$ gear pair is weaker in pitting, and hence it should be designed for the safety against pitting failure.

- **Maximum static load :**

$$V = \frac{\pi\, d_p\, n_p}{60 \times 1000} = \frac{\pi \times 88.27 \times 720}{60 \times 1000} = 3.3277 \text{ m/s}$$

$$K_v = \frac{5.6}{5.6 + \sqrt{V}} = \frac{5.6}{5.6 + \sqrt{3.3277}} = 0.7543$$

$$F_{eff} = \frac{K_a \cdot K_m \cdot f_t}{K_v} = \frac{1.5 \times 1 \times F_t}{0.7543}$$

$$\text{or} \quad F_{eff} = 1.9886\, F_t \qquad \text{...(c)}$$

Atmiya University Rajkot

In order to avoid the pitting failure,

$$F_w = N_f \cdot F_{eff}$$

$$10316.72 = 2.0 \times 1.9886\, F_t$$

$$\therefore \quad F_t = 2593.93 \text{ N} \qquad \text{...Ans.}$$

- **Power transmitting capacity :**

$$\therefore \quad P = F_t V = 2593.93 \times 3.3277 = 8631.83\text{W}$$

$$\textbf{or} \quad \mathbf{P = 8.63\ kW} \qquad \text{...Ans.}$$

Example 2.7 :

A helical pinion having 14 teeth to be made of alloy steel 40Ni2Cr1Mo28 (S_{ut} = 800 N/mm^2) is to mesh with a gear to be made of plain carbon steel 55C8 (S_{ut} = 720 N/ mm^2). The gear pair is required to transmit 30 kW power from an electric motor running at 720 r.p.m. to a machine running at 225 r.p.m. The application factor and load concentration factor are 1.3 and 1.1 respectively. The required factor of safety is 2.0. The face width is ten times the normal module and tooth system is 20° full-depth involute. The helix angle is 25°. The gears are machined to meet the specifications of grade 7. The deformation

factor for gear pair is 11000 e, N / mm. Design the gear pair by using the velocity factor and Buckingham's equation for dynamic load.

Suggest the surface hardness for gear pair.

Use the following relations :

$$Y' = 0.484 - \frac{2.87}{z'}$$

$$K_v = \frac{5.6}{5.6 + \sqrt{V}}$$

$$K = 0.16\left[\frac{BHN}{100}\right]^2, \text{ N/mm}^2$$

$$F_d = \frac{21\,V\,[bC\cos^2\psi + F_{tmax}]\cos\psi}{21V + \sqrt{bC\cos^2\psi + F_{tmax}}}, \text{ N}$$

For grade 7, $e = 11.0 + 0.9\,[m_n + 0.25\sqrt{d}\,]$, μm.

Solution :

Given :

z_p	= 14	;	S_{up}	= 800 N /mm² ;
S_{ug}	= 720 N/mm²	;	P	= 30000 W ;
n_p	= 720 r.p.m.	;	n_g	= 225 r.p.m. ;
K_a	= 1.3	;	K_m	= 1.1 ;
N_f	= 2.0	;	b	= $10m_n$;
ϕ_n	= 20°	;	ψ	= 25° ;
C	= 11000 e, N /mm .			

Atmiya University Rajkot

- **Beam strength :**

$$\sigma_{bp} = \frac{S_{up}}{3} = \frac{800}{3} = 266.67 \text{ N / mm}^2$$

$$\sigma_{bg} = \frac{S_{ug}}{3} = \frac{720}{3} = 240 \text{ N/mm}^2$$

$$G = \frac{n_p}{n_g} = \frac{z_g}{z_p}$$

$$\frac{720}{225} = \frac{z_g}{14}$$

$$\therefore \quad z_g = 44.8 \text{ or } 45$$

$$\therefore \quad z_g = 45$$

$$z'_p = \frac{z_p}{\cos^3\psi} = \frac{14}{\cos^3 25} = 18.8$$

$$z'_g = \frac{z_g}{\cos^3\psi} = \frac{45}{\cos^3 25} = 60.45$$

$$Y'_p = 0.484 - \frac{2.87}{z'_p} = 0.484 - \frac{2.87}{18.8} = 0.3313$$

$$Y'_g = 0.484 - \frac{2.87}{z'_g} = 0.484 - \frac{2.87}{60.45} = 0.4365$$

$$\sigma_{bp} \cdot Y'_p = 266.67 \times 0.3313 = 88.347 \text{ N / mm}^2$$

$$\sigma_{bg} \cdot Y'_g = 240 \times 0.4365 = 104.765 \text{ N / mm}^2$$

As $\sigma_{bp} \cdot Y'_p < \sigma_{bg} \cdot Y'_g$, pinion is weaker than gear in bending. Hence it is necessary to design pinion for bending.

$$F_b = \sigma_{bp} \cdot b \cdot m_n \cdot Y'_p$$

$$= 266.67 \times 10\, m_n \times m_n \times 0.3313$$

or $$F_b = 883.477\, m_n^2 \text{, N} \quad \text{...(a)}$$

- **Effective load :**

$$d_p = m_t z_p = \frac{m_n \cdot z_p}{\cos \psi} = \frac{m_n \times 14}{\cos 25} = 15.447\, m_n$$

$$V = \frac{\pi d_p n_p}{60 \times 1000} = \frac{\pi \times 15.447\, m_n \times 720}{60 \times 1000} = 0.5823\, m_n \text{, m/s}$$

$$F_t = \frac{P}{V} = \frac{30000}{0.5823 m_n} = \frac{51516.45}{m_n} \text{, N} \quad \text{...(b)}$$

$$K_v = \frac{5.6}{5.6 + \sqrt{V}} = \frac{5.6}{5.6 + \sqrt{0.5823\, m_n}}$$

$$F_{eff} = \frac{K_a \cdot K_m \cdot F_t}{K_v} = \frac{1.3 \times 1.1 \times 51516.45}{m_n} \times \frac{(5.6 + \sqrt{0.5823\, m_n})}{5.6}$$

or $$F_{eff} = 13155.09 \frac{(5.6 + \sqrt{0.5823 m_n})}{m_n} \text{, N} \quad \text{...(c)}$$

- **Estimation of module :**

In order to avoid the bending failure,

$$F_b = N_f \cdot F_{eff}$$

$$883.477\, m_n^2 = 2 \times 13155.09 \frac{(5.6 + \sqrt{0.5823 m_n})}{m_n}$$

$$m_n^3 = 166.77 + 22.72 \sqrt{m_n}$$

Solving above equation by trial and error, we get,

$$m_n \approx 6.1 \text{ mm}$$

From Table 2.1, the standard value of module under first choice is 8 mm.

- **Dimensions of gear pair :**

$$m_n = 8 \text{ mm ;}$$

Atmiya University Rajkot

$$m_t = \frac{m_n}{\cos\psi} = \frac{8}{\cos 25} = 8.827 \text{ mm};$$

$$z_p = 14;$$

$$z_g = 45;$$

$$b = 10m_n = 10 \times 8 = 80 \text{ mm};$$

$$d_p = m_t z_p = 8.827 \times 14 = 123.58 \text{ mm};$$

$$d_g = m_t z_g = 8.827 \times 45 = 397.21 \text{ mm};$$

$$a = (d_p + d_g)/2 = (123.58 + 397.21)/2 = 260.395 \text{ mm};$$

$$h_a = 1m_n = 8 \text{ mm};$$

$$h_f = 1.25m_n = 10 \text{ mm}.$$

- **Precise estimation of dynamic load by Buckingham's equation (check for design) :**

For grade 7 $\quad e = 11.0 + 0.9\,[m_n + 0.25\sqrt{d}\,]$

For pinion, $\quad e_p = 11.0 + 0.9\,[m_n + 0.25\sqrt{d_p}\,]$

$$= 11.0 + 0.9\,[8 + 0.25\sqrt{123.58}\,]$$

$$= 20.7\ \mu\text{m}$$

For gear, $e_g = 11.0 + 0.9\,[m_n + 0.25\sqrt{d_g}\,]$

$$= 11.0 + 0.9\,[8 + 0.25\sqrt{397.21}\,]$$

$$= 22.68\ \mu\text{m}$$

$$e = e_p + e_g = 20.7 + 22.68 = 43.38\ \mu\text{m}$$

or $\quad e = 43.38 \times 10^{-3}$ mm

Atmiya University Rajkot

The Buckingham's equation for dynamic load in tangential direction is given by,

$$F_d = \frac{12\,V\,[bC\cos^2\psi + F_{t\,max}]\cos\psi}{21\,V + \sqrt{bC\cos^2\psi + F_{t\,max}}}$$

Now, $\quad F_t = \dfrac{51516.45}{m_n} = \dfrac{51516.45}{8} = 6439.55$ N

$$F_{t\,max} = K_a \cdot K_m \cdot F_t = 1.3 \times 1.1 \times 6439.55 = 9208.56 \text{ N}$$

$$V = 0.5823m_n = 0.5823 \times 8 = 4.6584 \text{ m/s}$$

$$C = 11000\,e = 11000 \times 43.38 \times 10^{-3} = 477.18 \text{ N/mm}$$

$$F_d = \frac{21 \times 4.6584\,[80 \times 477.18 \times \cos^2 25 + 9208.56]\cos 25}{21 \times 4.6584 + \sqrt{80 \times 477.18 \times \cos^2 25 + 9208.56}}$$

or $\quad F_d = 12019.069$ N $\qquad$ ...(d)

- **Available factor of safety :**

$$F_{eff} = K_a \cdot K_m \cdot F_t + F_d$$

$$= 1.3 \times 1.1 \times 6439.55 + 12019.069$$

or $\quad F_{eff} = 21227.63$ N

From Equation (a),

$$F_b = 883.477\ m_n^2$$
$$= 883.477 \times (8)^2$$
$$\text{or} \quad F_b = 56542.53\ \text{N} \qquad \text{...(e)}$$

Hence, the available factor of safety is,

$$N_f = \frac{F_b}{F_{eff}} = \frac{56542.53}{21227.63}$$
$$\text{or} \quad \mathbf{N_f = 2.66 > 2.0} \qquad \textbf{...Ans.}$$

As the available factor of safety is higher than the required factor of safety, the design is safe.

- **Surface hardness :**

Atmiya University Rajkot

$$Q = \frac{2\,z_g}{z_g + z_p} = \frac{2 \times 45}{45 + 14} = 1.5254$$
$$F_w = \frac{d_p \cdot b \cdot Q \cdot K}{\cos^2\psi}$$
$$= \frac{123.58 \times 80 \times 1.5254 \times 0.16\ [\text{BHN} / 100]^2}{\cos^2 25}$$
$$\text{or} \quad F_w = 2937.58\ [\text{BHN} / 100]^2\ ,\ \text{N} \qquad \text{...(f)}$$

For the safety of gear pair against pitting failure,

$$F_w = N_f \cdot F_{eff}$$
$$2937.58\ [\text{BHN}/100]^2 = 2.0 \times 21227.63$$
$$[\text{BHN}/100]^2 = 14.452$$
$$\text{BHN} = 380.16 \text{ or } 385$$
$$\therefore \quad \mathbf{BHN = 385} \qquad \textbf{...Ans.}$$

DESIGN OF GEAR BOX (THEORY)

Design of Transmission Systems(DTS)
(21BTMECC404)

Unit No.4

Design of Gear Box

Prepared By:- Shivang S. Jani
Asst. Professor
Mechanical Engineering Department

the machine with :

(i) Change in torque and speed; or/and

(ii) Change in orientation of drive.

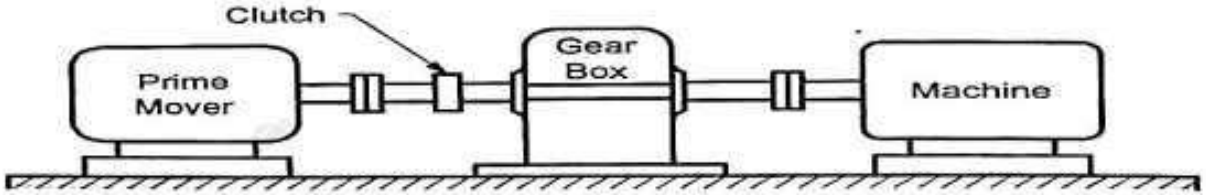

Fig. 5.1 : Gear Box

- The gear box (Fig. 5.1) consists of one or more gear pairs of same or different type.

5.1.1 Purpose of Using Gear Box :

- In engineering applications, where the prime mover is driving the machine, many a times the gear box is required.
- The gear box is required to serve one or more of the following purposes :

1. To increase the torque,
2. To convert the standard speed of a prime mover to the specific speed of a driven machine,
3. To convert single input speed to multiple output speeds,
4. To facilitate specific relative positions of machine shaft and prime mover shaft,
5. To increase the speed.

Atmiya University Rajkot

1. To increase the torque :

When the torque developed by the prime mover is less as compared to the torque required by the driven machine, the gear box is used to increase the torque. The increase in torque from the driving shaft to the driven shaft is accompanied by the reduction in speed.

2. To convert the standard speed of a prime mover to the specific speed of a driven machine :

In applications, where the prime mover runs at a standard speed and the machine is required to run at a specific speed or a specific speed range, the gear box is used to convert the standard speed of the prime mover to the specific speed or the specific speed range of the driven machine.

3. To convert single input speed to multiple output speeds :

In some applications, like machine tools, though the prime mover runs at a single speed, the driven machine is required to run at different speeds. In such cases, the gear box is used to convert the single input speed of the prime mover to the multiple output speeds.

4. **To facilitate specific relative positions of machine shaft and prime mover shaft :**

Certain applications need specific relative positions of the machine shaft and the prime mover shaft. In such cases, the gear box is used to connect the two shafts.

5. **To increase the speed :**

In few industrial applications, the machine is required to operate at higher speed as compared to the prime mover speed. The gear box increases the speed from the prime mover shaft to the machine shaft. This increase in speed is accompanied by the reduction in torque.

5.1.2 Types of Gear Boxes :

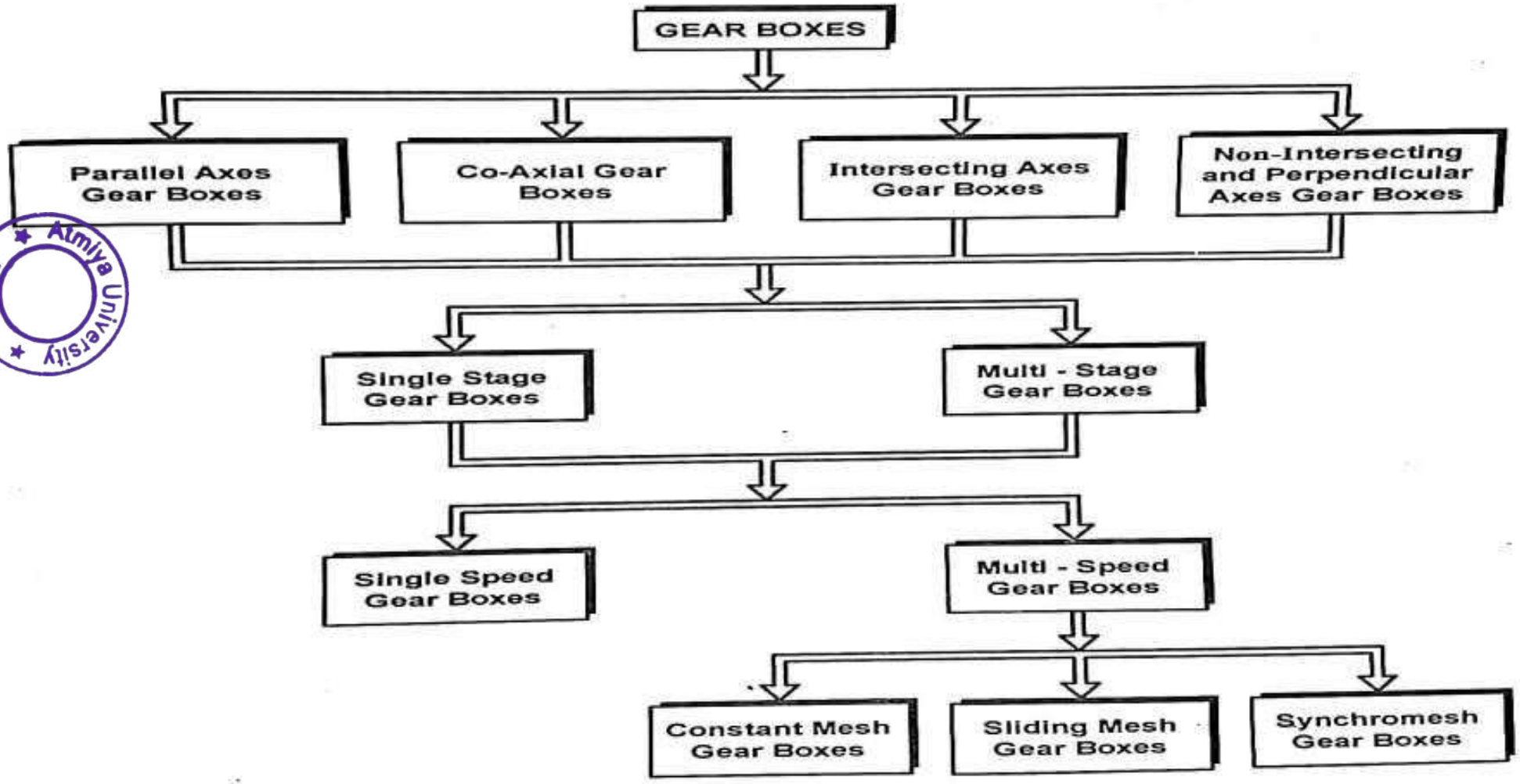

Atmiya University Rajkot

Fig. 5.2 : Classification of Gear Boxes

- Fig. 5.2 shows the classification of gear boxes.
- According to the relative position of the input and output shafts, the gear boxes are classified into four types :

1. Parallel Axes Gear Boxes
2. Co-Axial Gear Boxes
3. Intersecting Axes Gear Boxes
4. Non-Intersecting and Perpendicular Axes Gear Boxes

- According to the number of stages used, the gear boxes are classified into two types :

1. Single Stage Gear Boxes
2. Multi-Stage Gear Boxes

- According to the number of speed ratios obtained, the gear boxes are classified into two types :

1. Single Speed Gear Boxes
2. Multi-Speed Gear Boxes

Atmiya University Rajkot

1. Single Speed Gear Boxes :

If gear box operates with only one speed ratio or gear ratio, it is called as **single speed gear box**. In case of single speed gear box, for every input speed, there is only one output speed.

2. Multi-Speed Gear Boxes :

If gear box operates with more than one speed ratio or gear ratio, it is called as **multi-speed gear box**. In case of multi-speed gear box, for every input speed there are more than one output speeds. The examples of multi-speed gear boxes are : machine tool gear boxes and automobile gear boxes.

The multi-speed gear boxes are further classified into three categories :

(i) Constant mesh gear boxes
(ii) Sliding mesh gear boxes
(iii) Synchromesh gear boxes

5.2 NEED OF MULTI-SPEED GEAR BOX IN MACHINE TOOLS

- In machine tools, different operations like : turning, face turning, drilling, boring, threading, etc., are required to be carried out on a workpiece.
- In order to optimize the tool life and minimize the machining cost, each machining operation is carried out at a specific cutting speed. Therefore, different machining operations require different spindle speeds.

- For any machining operation, the cutting speed is given by,

$$v = \frac{\pi D n}{1000} \quad ...(5.1)$$

Where, v = cutting speed, m/min
D = diameter of workpiece at cutting location, mm
n = spindle speed, r.p.m.

$$n = \frac{1000\, v}{\pi D} \quad ...(5.2)$$

- From Equation (5.2) it is seen that, even in case of machine tools where only one type of machining operation is carried out, the required spindle speeds are different for different workpiece diameters.
- Hence, the machine tools need to operate with different spindle speeds. However, the prime mover, which is an electric motor, operates at a single constant speed.
- Therefore, for obtaining number of output speeds with a single input speed, the multi-speed gear box is required in machine tools.

5.3 BASIC CONSIDERATIONS IN DESIGN OF MULTI-SPEED GEAR BOX

Atmiya University Rajkot

- Before designing the multi-speed gear box for the machine tools, it is necessary to know the conditions to be satisfied by the ideal multi-speed drive.
- The ideal multi-speed gear box should satisfy the following conditions :

1. Optimum number of speed steps with increments between 10 and 15 %,
2. Speed change without stopping the electric motor,
3. Desired speed change without passing through intermediate speed steps,
4. One set of gears in engagement at one time,
5. Use of minimum possible parts,
6. Ergonomically designed and centralized control unit,
7. Entire drive unit located inside the machine tool.

1. Optimum number of speed steps with increments between 10 and 15 % :

The total speed range of the multi-speed drive should be divided into optimum number of speed steps with increments between 10 and 15 %.

2. Speed change without stopping the electric motor :

The multi-speed drive should be such that, all the speed steps should be obtained without stopping the motor.

3. Desired speed change without passing through intermediate speed steps :

The multi-speed drive should facilitate the desired speed change without passing through all the intermediate speed steps.

4. One set of gears in engagement at one time :

In multi-speed drives, only the set of gears through which the speed is obtained, should be engaged at one time.

5. Use of minimum possible parts :

The multi-speed drive should use minimum possible number of parts like : gears, shafts, bearings and levers.

6. Ergonomically designed and centralized control unit :

The control unit of the multi-speed drive should be located centrally and it should be ergonomically design. The control unit should be easy to operate and convenient to the operator.

7. Entire drive unit located inside the machine tool :

All the components of the multi-speed drive unit should be located inside the machine tool. It should not have any auxiliary component located outside the machine tool.

5.4 STEPPED REGULATION OF SPEEDS IN MULTI-SPEED GEAR BOX

In multi-speed gear box, for a fixed single input speed, the output speed obtained is between n_{max} and n_{min} . The variation of the output speed is not stepless, but is in the discrete steps.

Atmiya University Rajkot

5.4.1 Various Laws for Stepped Regulation :

- The ideal multi-speed drive is one which gives **'stepless variation'**, which can be obtained by electrical, hydraulic, or friction devices.
- In a stepped regulation of speed, only certain discrete values of spindle r.p.m. are available on machine tool.
- In order to select the discrete steps of speed between two extreme values of speeds, following three laws are proposed :

1.	Speed Steps Based on Arithmetic Progression
2.	Speed Steps Based on Geometric Progression
3.	Speed Steps Based on Harmonic Progression

1. Speed Steps Based on Arithmetic Progression :

- **In arithmetic progression**, the difference between any two successive spindle speeds is constant.
- Let,

n_{min} = minimum spindle speed, r.p.m.

n_{max} = maximum spindle speed, r.p.m.

$n_1, n_2, ..., n_z$ = different spindle speeds, r.p.m.

a_t = common difference of the arithmetic progression, r.p.m.

z = total number of speed steps

- The common difference of the arithmetic progression is given by,

$$a_t = \frac{n_{max} - n_{min}}{(z-1)} \quad ...(5.3)$$

- Hence, the different spindle speeds are :

$$n_1 = n_{min}$$
$$n_2 = n_1 + a_t = n_{min} + a_t$$
$$n_3 = n_2 + a_t = n_{min} + 2\,a_t$$
$$n_4 = n_2 + a_t = n_{min} + 3\,a_t$$
$$\vdots$$
$$n_z = n_{z-1} + a_t = n_{min} + (z-1)\,a_t$$

- For machining operation, the cutting speed is given by,

Atmiya University Rajkot

$$v = \frac{\pi D n}{1000}$$

where v = cutting speed, m/min

D = diameter of workpiece at cutting location, mm

n = spindle speed, r.p.m.

$$\therefore \quad D = \frac{1000v}{\pi n} \quad ...(5.4)$$

- For a maximum cutting speed '**v**' under the selected machining conditions, the diameter range of workpiece that can be machined at a particular spindle speed 'n_k' is obtained as follows :

Upper limit of diameter, $D_k = \dfrac{1000v}{\pi n_k}$

Lower limit of diameter, $D_{k+1} = \dfrac{1000v}{\pi n_{k+1}}$

Range of diameters,

$$\left.\begin{aligned} \Delta D_k &= D_k - D_{k+1} \\ \text{or} \quad \Delta D_k &= \frac{1000v}{\pi}\left[\frac{1}{n_k} - \frac{1}{n_{k+1}}\right] \end{aligned}\right\} \quad ...(5.5)$$

- In arithmetic progression, at low spindle speeds, the diameter range is very wide and hence there is need to add more speed steps between the calculated values; whereas at high spindle speeds, the diameter range is very narrow and hence some of the speed steps are redundant.
- **Hence, multi-speed drive with arithmetic progression is poor in low spindle speed range.**

2. Speed Steps Based on Geometric Progression :

- In **geometric progression**, the ratio of any two successive spindle speeds is constant and is called as geometric progression ratio.

Let, n_{min} = minimum spindle speed, r.p.m.

n_{max} = maximum spindle speed, r.p.m.

$n_1, n_2, \ldots, n_z$ = different spindle speeds, r.p.m.

z = total number of spindle speed steps

ϕ = geometric progression ratio

- **Geometric progress ratio** is the ratio of two successive spindle speeds. It is given by,

Atmiya University Rajkot

$$\phi = \frac{n_2}{n_1} = \frac{n_3}{n_2} \ldots = \frac{n_z}{n_{z-1}}$$

or

$$\phi = \frac{n_{k+1}}{n_k} \qquad \ldots(5.6)$$

Now,

$$\frac{n_{max}}{n_{min}} = \frac{n_z}{n_1}$$

$$= \frac{n_z}{n_{z-1}} \cdot \frac{n_{z-1}}{n_{z-2}} \cdot \ldots \cdot \frac{n_3}{n_2} \cdot \frac{n_2}{n_1}$$

$$= \phi \cdot \phi \ldots \phi \cdot \phi \qquad [\,(z-1)\text{ times}\,]$$

or

$$\frac{n_{max}}{n_{min}} = \phi^{(z-1)}$$

$$\left.\begin{aligned} \therefore \quad \phi &= \left[\frac{n_{max}}{n_{min}}\right]^{\frac{1}{(z-1)}} \\ \text{or} \quad \phi &= R_n^{\frac{1}{(z-1)}} \end{aligned}\right\} \qquad \ldots(5.7)$$

where, $R_n = \frac{n_{max}}{n_{min}}$

$= $ range ratio of spindle speeds

- Hence, the different spindle speeds are :

$$n_1 = n_{min}$$
$$n_2 = n_1 \phi = n_{min} \phi$$
$$n_3 = n_2 \phi = n_1 \phi^2 = n_{min} \phi^2$$
$$n_4 = n_3 \phi = n_1 \phi^3 = n_{min} \phi^3$$
$$\vdots$$
$$\vdots$$
$$n_z = n_{z-1} \phi = n_1 \phi^{(z-1)} = n_{min} \phi^{(z-1)}$$

- For a maximum cutting speed 'v' under the selected machining conditions, the diameter range of workpiece that can be machined at a particular spindle speed 'n_k' is obtained as follows :

Upper limit of diameter, $D_k = \frac{1000\, v}{\pi\, n_k}$

Lower limit of diameter, $D_{k+1} = \frac{1000\, v}{\pi\, n_{k+1}}$

Range of diameters,

$$\left.\begin{aligned} \Delta D_k &= D_k - D_{k+1} \\ \text{or} \quad \Delta D_k &= \frac{1000\, v}{\pi}\left[\frac{1}{n_k} - \frac{1}{n_{k+1}}\right] \end{aligned}\right\} \quad \ldots(5.8)$$

- In geometric progression, at low spindle speeds, the diameter range is wide and hence there is need to add more speed steps between the calculated values; whereas at high spindle speeds, the diameter range is very narrow and hence some of the speed steps are redundant.
- The variation in diameter in case of geometric progression is not as wide as in case of arithmetic progression.
- **Hence, multi-speed drive with geometric progression is poor in low spindle speed range.**

Alpha University Rajkot

3. Speed Steps Based on Harmonic Progression :

- **In harmonic progression**, the difference between reciprocal of any two successive spindle speeds is constant.

  Let, n_{min} = minimum spindle speed, r.p.m.

  n_{max} = maximum spindle speed, r.p.m.

  $n_1, n_2, \ldots n_z$ = different spindle speeds, r.p.m.

  z = total number of spindle speed steps

- The difference between reciprocal of any two successive spindle speeds is given by,

$$\frac{1}{n_k} - \frac{1}{n_{k+1}} = C \qquad \ldots(5.9)$$

Where, C = constant

$$\therefore \quad \frac{1}{n_{k+1}} = \frac{1}{n_k} - C$$

$$\frac{1}{n_{k+1}} = \frac{1 - C\,n_k}{n_k}$$

or

$$n_{k+1} = \left[\frac{n_k}{1 - C\,n_k}\right] \qquad \ldots(5.10)$$

Atmiya University Rajkot

- The ratio of successive speeds is,

$$\phi_k = \frac{n_{k+1}}{n_k}$$

or

$$\phi_k = \left[\frac{1}{1 - C\,n_k}\right] \qquad \ldots(5.11)$$

$$\therefore \quad n_{k+1} = n_k \cdot \phi_k \qquad \ldots(5.12)$$

- The diameter range for any speed step is given by,

$$\Delta D_k = D_k - D_{k+1}$$

$$= \frac{1000\,v}{\pi\,n_k} - \frac{1000\,v}{\pi\,n_{k+1}}$$

$$= \frac{1000\,v}{\pi}\left[\frac{1}{n_k} - \frac{1}{n_{k+1}}\right]$$

$$= \frac{1000\,v}{\pi} \times C$$

or $$\Delta D_k = \text{constant} \qquad ...(5.13)$$

- Hence, the different spindle speeds are :

$$n_1 = n_{min}$$

$$n_2 = \left[\frac{n_1}{1 - C\,n_1}\right]$$

$$n_3 = \left[\frac{n_2}{1 - C\,n_2}\right] = \frac{n_1/(1 - C\,n_1)}{\left[1 - C\left(\frac{n_1}{1 - C\,n_1}\right)\right]}$$

$$= \frac{n_1/(1 - C\,n_1)}{\left[1 - \frac{C\,n_1}{(1 - C\,n_1)}\right]} = \frac{n_1/(1 - C\,n_1)}{\left[\frac{1 - C\,n_1 - C\,n_1}{(1 - C\,n_1)}\right]}$$

or $$n_3 = \frac{n_1}{[1 - 2\,C\,n_1]}$$

Similarly $$n_4 = \frac{n_1}{[1 - 3\,C\,n_1]}$$

$$\vdots$$

$$n_z = \frac{n_1}{[1 - (z - 1)\,C\,n_1]}$$

Atmiya University Rajkot

- In case of harmonic progression, the diameter range is constant throughout. However, the speed steps are too wide at high spindle speeds.
- **Hence, multi-speed drive with harmonic progression is poor in high spindle speed range.**

5.4.2 Advantages of Geometric Progression :

Though the multi-speed drive with geometric progression gives relatively poor performance in low spindle speed range, it is commonly used in machine tool drives due to following advantages :

1. Constant Loss of Economic Cutting Speed in Total Speed Range,
2. Better Gear Box Design Features.

1. Constant Loss of Economic Cutting Speed in Total Speed Range :

Let, $n_1, n_2, \ldots n_k, n_{k+1}, \ldots, n_z$ = different spindle speeds, r.p.m.

z = total number of spindle speeds

d = diameter of workpiece, mm

v_{opt} = optimum cutting speed, m/min

5.5 SELECTION OF GEOMETRIC PROGRESSION RATIO (ϕ) IN MULTI-SPEED GEAR BOX

Let, n_{min} = minimum spindle speed, r.p.m.

n_{max} = maximum spindle speed, r.p.m.

$n_1, n_2, \ldots, n_z$ = different spindle speeds, r.p.m.

z = total number of spindle speed steps

ϕ = geometric progression ratio

R_n = range ratio of spindle speeds

$$= \frac{n_{max}}{n_{min}}$$

- **Geometric progression ratio :**

$$\frac{n_{max}}{n_{min}} = \frac{n_z}{n_1}$$

$$= \frac{n_z}{n_{z-1}} \cdot \frac{n_{z-1}}{n_{z-2}} \cdot \ldots \cdot \frac{n_3}{n_2} \cdot \frac{n_2}{n_1}$$

$$= \phi \cdot \phi \ldots \phi \cdot \phi \qquad [\,(z-1) \text{ times}\,]$$

or $$\frac{n_{max}}{n_{min}} = \phi^{(z-1)}$$

$$\left.\begin{aligned} \therefore \quad \phi &= \left[\frac{n_{max}}{n_{min}}\right]^{\frac{1}{(z-1)}} \\ \text{or} \quad \phi &= R_n^{\frac{1}{(z-1)}} \end{aligned}\right\} \qquad \ldots(5.15)$$

Atmiya University Rajkot

- **Maximum loss of economic cutting speed [$(\Delta v)_{max}$] :**

From Equation (5.14), the maximum loss of economic cutting speed is given by,

$$(\Delta v)_{max} = \left[\frac{\phi - 1}{\phi + 1}\right] v_{opt} \qquad \ldots(5.16)$$

where, v_{opt} = optimum cutting speed, m/min

The maximum percentage loss of economic cutting speed is,

$$\frac{(\Delta v)_{max}}{v_{opt}} \times 100 = \left[\frac{\phi - 1}{\phi + 1}\right] \times 100 \qquad \ldots(5.17)$$

- **Effect of lower geometric progression ratio (ϕ) :**
  - (i) From Equations (5.16) and (5.17) it is seen that, for the lower value of geometric progression ratio 'ϕ' the loss of economic cutting speed is minimum.
  - (ii) From Equation (5.15) it is seen that, if the geometric progression ratio 'ϕ' is lower, the number of speed steps or spindle speeds '**z**' is large. The large number of speed steps make the drive complicated and expensive.
- **Effect of higher geometric progression ratio (ϕ) :**
  - (i) For a given value of range ratio '$\mathbf{R_n}$', if the geometric progression ratio 'ϕ' is increased, the number of speed steps or spindle speeds '**z**' decreases. The small number of speed steps make the drive compact and least expensive.
  - (ii) However, higher the value of geometric progression ratio 'ϕ', higher is the loss of economic cutting speed.

5.5.1 Standard Values of Geometric Progression Ratio (ϕ) :

- In order to compromise between the loss of economic cutting speed and the compactness of the drive, the value of 'ϕ' is selected such that, $1 < \phi \leq 2$
- The standard values of 'ϕ' are based on the **series of preferred** numbers. The corresponding standard values are :

(i) $\phi_{40} = R = \sqrt[40]{10} = 1.06$

(ii) $\phi_{20} = R = \sqrt[20]{10} = 1.12$

(iii) $\phi_{10} = R = \sqrt[10]{10} = 1.26$

(iv) $\phi_{20/3} = R = \sqrt[20/3]{10} = 1.41$

(v) $\phi_{5} = R = \sqrt[3]{10} = 1.58$

(vi) $\phi_{4} = R = \sqrt[4]{10} = 1.78$

(vii) $\phi_{10/3} = R = \sqrt[10/3]{10} = 2.0$

Atmiya University Rajkot

- Table 5.4 shows the standard geometric progression ratios, 'ϕ' and the corresponding percentage loss of economic cutting speed.

Table 5.4 : Geometric Progression Ratio and Loss of Economic Cutting Speed

ϕ	1.06	1.12	1.26	1.41	1.58	1.78	2.0
Percentage Loss of Economic Cutting Speed, $\left[\frac{\phi-1}{\phi+1}\right] \times 100$	2.9	5.7	11.5	17.0	22.5	28.1	33.3
	⟶ **Increases**						
Compactness of Drive	⟶ **Increases**						

- **Smaller values of geometric progression ratio (ϕ) :**

The smaller values of 'ϕ' [1.26, 1.12 and some times 1.06] complicate the drive to an extent where it cannot compete with stepless drive. The smaller values of 'ϕ' are used in large sized heavy duty machine tools and automats.

- **Larger values of geometric progression ratio (ϕ) :**

The larger values of 'ϕ' [1.58, 1.78 and some times 2.0] result in large loss of productivity (i.e. economic cutting speed). The larger values of 'ϕ' are rarely used and that too only in small-sized special purpose machine tools which operate on workpiece of small diameter.

- **Recommended values of geometric progression ratio (ϕ) :**

Table 5.5 gives the recommended values of 'ϕ' in machine tools.

Table 5.5 : Recommended Value of 'ϕ' in Machine Tools

Sr. No.	Machine Tool	Recommanded Value of 'ϕ'
1.	Heavy-duty machine tools and automats	$\phi_{20} = 1.12$
2.	Large to medium size, general purpose machine tools and automats	$\phi_{10} = 1.26$
3.	Medium size, general purpose machine tools	$\phi_{20/3} = 1.41$
4.	Medium to small size, general purpose machine tools	$\phi_5 = 1.58$

Azmiya University Bakiyat

- **Standard spindle speeds in multi-speed gear box :**

The standard spindle speeds used in machine tools, for various values 'ϕ', are given in Table 5.6.

Table 5.6 : Standard Spindle Speeds For Various Values of 'ϕ'

ϕ	$\phi_{40} = 1.06$	$\phi_{20} = 1.12$	$\phi_{10} = 1.26$	$\phi_{20/3} = 1.41$	$\phi_5 = 1.58$	$\phi_4 = 1.78$	$\phi_{10/3} = 2.0$
Spindle speeds, r.p.m	10.0	10.0	10.0	10.0	10.0	10.0	10.0
	10.6						
	11.2	11.2					
	11.8						
	12.5	12.5	12.5				
	13.2						
	14.0	14.0		14.0			

5.6 PARAMETERS IN KINEMATIC DESIGN OF MULTI-SPEED GEAR BOX

The following parameters are required in kinematic design of multi-speed gear box :

1. Maximum Spindle Speed (n_{max})
2. Minimum Spindle Speed (n_{min})
3. Number of Spindle Speed Steps (z)
4. Number of Stages of Gear Box (N)
5. Speed of Electric Motor (n_{em})

Atmiya University Rajkot

1. **Maximum Spindle Speed (n_{max}) :**

- The maximum required spindle speed 'n_{max}' can be determined by knowing the minimum diameter of the workpiece to be machined and the corresponding maximum cutting speed.
- The maximum spindle speed is given by,

$$n_{max} = \frac{1000\ v_{max}}{\pi\ d_{min}}, \text{ r.p.m.} \qquad ...(5.22)$$

where, d_{min} = minimum diameter of the workpiece to be machined, mm

v_{max} = corresponding maximum cutting speed, m/min

2. **Minimum Spindle Speed (n_{min}) :**

- The minimum required spindle speed 'n_{min}' can be determined by knowing the maximum diameter of the workpiece to be machined and the corresponding minimum cutting speed.
- The minimum spindle speed is given by,

$$n_{min} = \frac{1000\ v_{min}}{\pi\ d_{max}}, \text{ r.p.m.} \qquad ...(5.23)$$

Atmiya University Rajkot

where, d_{max} = maximum diameter of the workpiece to be machined, mm

v_{min} = corresponding minimum cutting speed, m/min

3. **Number of Spindle Speed Steps (z) :**

- **Range ratio :**

The range ratio for the multi-speed gear box is given by,

$$R_n = \frac{n_{max}}{n_{min}}$$

$$= \frac{1000\ v_{max}}{\pi\ d_{min}} \times \frac{\pi\ d_{max}}{1000\ v_{min}}$$

$$= \frac{v_{max}}{v_{min}} \cdot \frac{d_{max}}{d_{min}}$$

or

$$R_n = R_v\ R_d \qquad ...(5.24)$$

where, R_v = range of cutting speeds employed on machine tool

R_d = range of workpiece diameters to be machined

- **Selection of range ratio :**

The range of cutting speeds 'R_v' should be kept within the reasonable limits. The higher value of 'R_v' would lead to the loss of productivity. The value of 'R_v' is determined by considering the economics of machining (least unit cost and maximum production rate). The range of workpiece diameters 'R_d' ranges between 2 (for special purpose machine tools) to 6 (for general purpose machine tools). After selecting the proper values of 'R_v' and 'R_d', the range ratio 'R_n' is determined. In order to make the allowances for possible future improvements in cutting tool design and machining techniques, the value of 'R_n' obtained from Equation (5.3) is increased by 20 to 25%. The typical values of 'R_n' for different machine tools are given in Table 5.8. The value of range ratio 'R_n' is large for general purpose machine tools, while it is small for special- purpose machine tools.

Table 5.8 : Range Ratio for Different Machine Tools

Machine Tool	Range Ratio, R_n
• Centre Lathe	40 – 60
• Boring Machine	40 – 60
• Milling Machine	30 – 50
• Drilling Machine	15 – 30
• Semi-Automatic Lathe	15 – 25
• Shaping Machine	10 – 15
• Automatic Lathe	8 – 10
• Grinding Machine	1 – 10

Atmiya University Rajkot

- **Number of spindle speed steps :**

$$R_n = \phi^{z-1}$$

$$\therefore \quad (z-1)\log_{10}\phi = \log_{10} R_n$$

$$(z-1) = \frac{\log_{10} R_n}{\log_{10}\phi}$$

$$\therefore \quad z = \frac{\log_{10} R_n}{\log_{10}\phi} + 1 \qquad \text{...(5.25)}$$

$$= \frac{\log_{10} R_n + \log_{10}\phi}{\log_{10}\phi}$$

$$\text{or} \quad z = \frac{\log_{10}(R_n\,\phi)}{\log_{10}\phi} \qquad \text{...(5.26)}$$

- The value of 'z' can be determined by knowing 'R_n' and 'ϕ'. The number of speed steps

'z', determined by Equation (5.26), is rounded off to the nearest integer number which can be split into the multiples of 2 and 3.

The normally selected values of z are : 2, 3, 4, 6, 8, 9, 12, 16, 18, 24, 27, 32 and 36.

4. Number of Stages (Transmission Groups) of Gear Box (N) :

- The total number of spindle speed steps is given by,

$$z = \begin{bmatrix} \text{Number of speed} \\ \text{steps in } 1^{st} \text{ stage} \end{bmatrix} \times \begin{bmatrix} \text{Number of speed} \\ \text{steps in } 2^{nd} \text{ stage} \end{bmatrix} \ldots \times \begin{bmatrix} \text{Number of speed} \\ \text{steps in last stage} \end{bmatrix}$$

or

$$z = p_1 \cdot p_2 \cdot \ldots p_N \qquad \ldots(5.27)$$

where, p_1 = number of speed steps in first- stage or first transmission group

p_2 = number of speed steps in second stage or second transmission group

p_N = number of speed steps in N^{th} stage of Nth transmission group

N = number of stages or number of transmission groups of gear box

- In order to obtain the required speed steps 'z' using minimum number of gears, it is necessary that all stages should have same number of speed steps.

Atmiya University Rajkot

Therefore, $p_1 = p_2 = \ldots = p_N = p$ ...(5.28)

$\therefore \quad z = p.p \ldots p$ [N times]

or $z = p^N$ ...(5.29)

$\therefore \quad \log_{10} z = N \log_{10} p$

- Hence, the number of stages of gear box is given by,

$$N = \frac{\log_{10} z}{\log_{10} p} \qquad \ldots(5.30)$$

- The value of 'p' (i.e. number of speed steps per stage) is either 2 or 3.
- If the value of 'N' obtained from Equation (5.30) is not an integer number, then Equation (5.29) is modified as,

$$z = 2^{N_1} \cdot 3^{N_2} \qquad \ldots(5.31)$$

where, N_1 = number of stages with two speed steps

N_2 = number of stages with three speed steps

$N = N_1 + N_2$

For example :

(i) If $z = 27$, then $N = \frac{\log_{10} 27}{\log_{10} 3} = 3$

(ii) If $z = 8$, then $N = \frac{\log_{10} 8}{\log_{10} 2} = 3$

(iii) If $z = 12$, then $N = \frac{\log_{10} 12}{\log_{10} 3} = 2.26$ not possible

$$N = \frac{\log_{10} 12}{\log_{10} 2} = 3.58 \text{ not possible}$$

Hence, $z = 2^{N_1} \cdot 3^{N_2}$

$12 = 2^{N_1} \cdot 3^{N_2}$

or $12 = 2^2 \cdot 3^1$

$\therefore$ $N_1 = 2$ and $N_2 = 1$

$\therefore$ $N = N_1 + N_2 = 2 + 1 = 3$

5. Speed of Electric Motor (n_{em}) :

Atmiya University Rajkot

- The speed of electric motor 'n_{em}' is required to decide :
  - (i) The speed of input shaft of the gear box; and
  - (ii) The mode of transmission from electric motor to input shaft.

  If the required speed of input shaft of the gear box is same as the motor speed, then the motor is directly coupled to the input shaft. If the required speed of input shaft is different than the motor speed, then the two are connected either by belt drive or gear drive.

5.7 KINEMATIC DIAGRAM (GEARING DIAGRAM) OF GEAR BOX

- After determining the different standard spindle speeds between the range n_{max} and n_{min}, it is necessary to construct the kinematic diagram (gearing diagram) of the gear box. It includes :
  - (i) deciding the number of shafts;
  - (ii) deciding the number of gears on each shaft;
  - (iii) deciding the arrangement of gears on each shaft; and
  - (iv) deciding the number of teeth on each gear

- For constructing the kinematic diagram (gearing diagram) of the gear box, it is necessary to know the distribution of speeds on input shaft, intermediate shafts and output shaft.
- The distribution of speeds on input shaft, intermediate shafts and output shaft is obtained in following stages :

1. Structural Formulae,
2. Structure Diagrams,
3. Ray Diagrams and Speed Charts.

5.8 STRUCTURAL FORMULAE

- **Structural formula** *is the mathematical expression giving the distribution of number of speed steps in each stage (transmission group) and the number of spindle speed steps by which two adjacent speed values of the each stage (transmission group) are separated.*

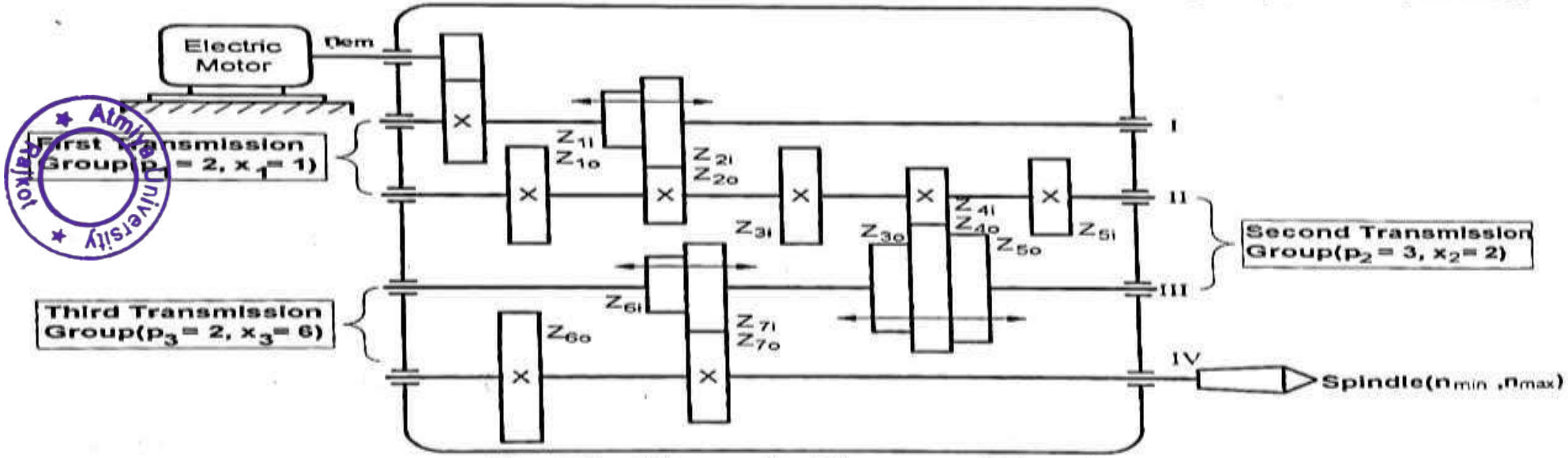

Fig. 5.5 : Kinematic Diagram of Gear Box

Fig. 5.5 shows the kinematic diagram of a machine tool gear box

Let, n_{min} = minimum spindle speed, r.p.m.

n_{max} = maximum spindle speed, r.p.m.

$n_1, n_2, \ldots, n_z$ = different spindle speeds, r.p.m.

z = total number of spindle speed steps

ϕ = geometric progression ratio

Atmiya University,Rajkot
Faculty of Engineering & Technology

Department of Mechanical Engineering

Prepared by: Shivang S. Jani

Course: Design of Machine Elements (21BTMECC304)

Module: Design against Static & Fluctuating Load

Design of Machine Elements (21BTMECC304)

(DME)

B. Tech Sem. III

Unit No.1

Design against Static load & Fluctuating load

Prepared By:- Shivang S. Jani

Assist. Professor

Mechanical Engineering Department

What is Design

- Design is a creative planning process that leads to useful products and systems.
- There are no perfect designs.
- Design requirements are made by criteria and constraints.

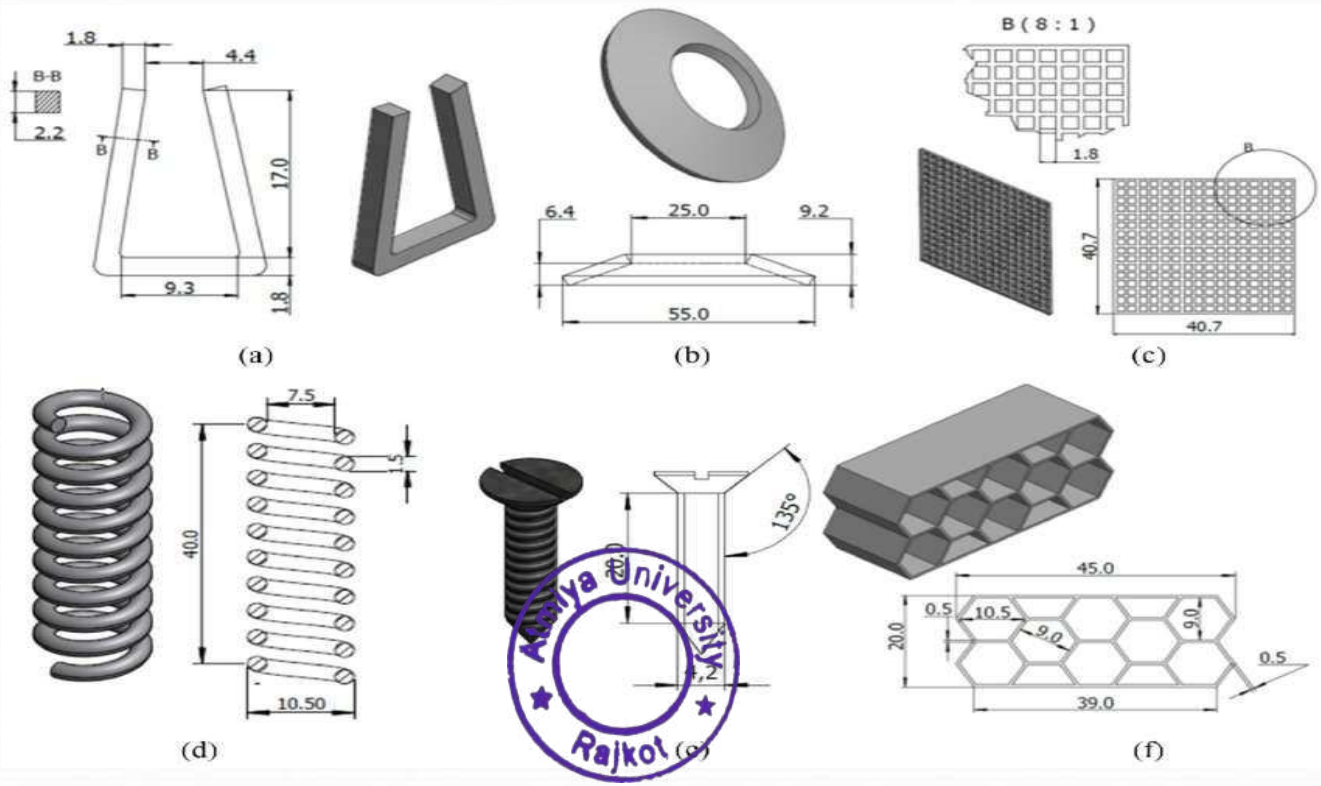

- The subject Machine Design is the creation of new and better machines and improving the existing ones.
- A new or better machine is one which is more economical in the overall cost of production and operation.
- The process of design is a long and time consuming one. From the study of existing ideas, a new idea has to be conceived.
- The idea is then studied keeping in mind its commercial success and given shape and form in the form of drawings.
- In the preparation of these drawings, care must be taken of the availability of resources in money, in men and in materials required for the successful completion of the new idea into an actual reality.
- In designing a machine component, it is necessary to have a good knowledge of many subjects such as Mathematics, Engineering Mechanics, Strength of Materials, Theory of Machines, Workshop Processes and Engineering Drawing.

Atmiya University Rajkot

Classifications of Machine Design

1. *Adaptive design*

- In most cases, the designer's work is concerned with adaptation of existing designs.
- This type of design needs no special knowledge or skill and can be attempted by designers of ordinary technical training.
- The designer only makes minor alternation or modification in the existing designs of the product.

2. *Development design*

- This type of design needs considerable scientific training and design ability in order to modify the existing designs into a new idea by adopting a new material or different method of manufacture.
- In this case, though the designer starts from the existing design, but the final product may differ quite markedly from the original product.

3. *New design*

- This type of design needs lot of research, technical ability and creative thinking. Only those designers who have personal qualities of a sufficiently high order can take up the work of a new design.

Atmiya University

The designs, depending upon the methods used, may be classified as follows :

(a) Rational design

- This type of design depends upon mathematical formulae of principle of mechanics.

(b) Empirical design

- This type of design depends upon empirical formulae based on the practice and past experience.

(c) Industrial design

- This type of design depends upon the production aspects to manufacture any machine component in the industry.

(d) Optimum design

- It is the best design for the given objective function under the specified constraints. It may be achieved by minimising the undesirable effects.

(e) System design

- It is the design of any complex mechanical system like a motor car.

(f) Element design

- It is the design of any element of the mechanical system like piston, crankshaft, connecting rod, etc.

(g) Computer Aided Design

- This type of design depends upon the use of computer systems to assist in the creation, modification, analysis and optimisation of a design.

Atmiya University Rajkot

BASIC PROCEDURE OF MACHINE DESIGN

- The basic procedure of machine design consists of a step-by-step approach from given specifications about the functional requirements of a product to the complete description in the form of drawings of the final product.

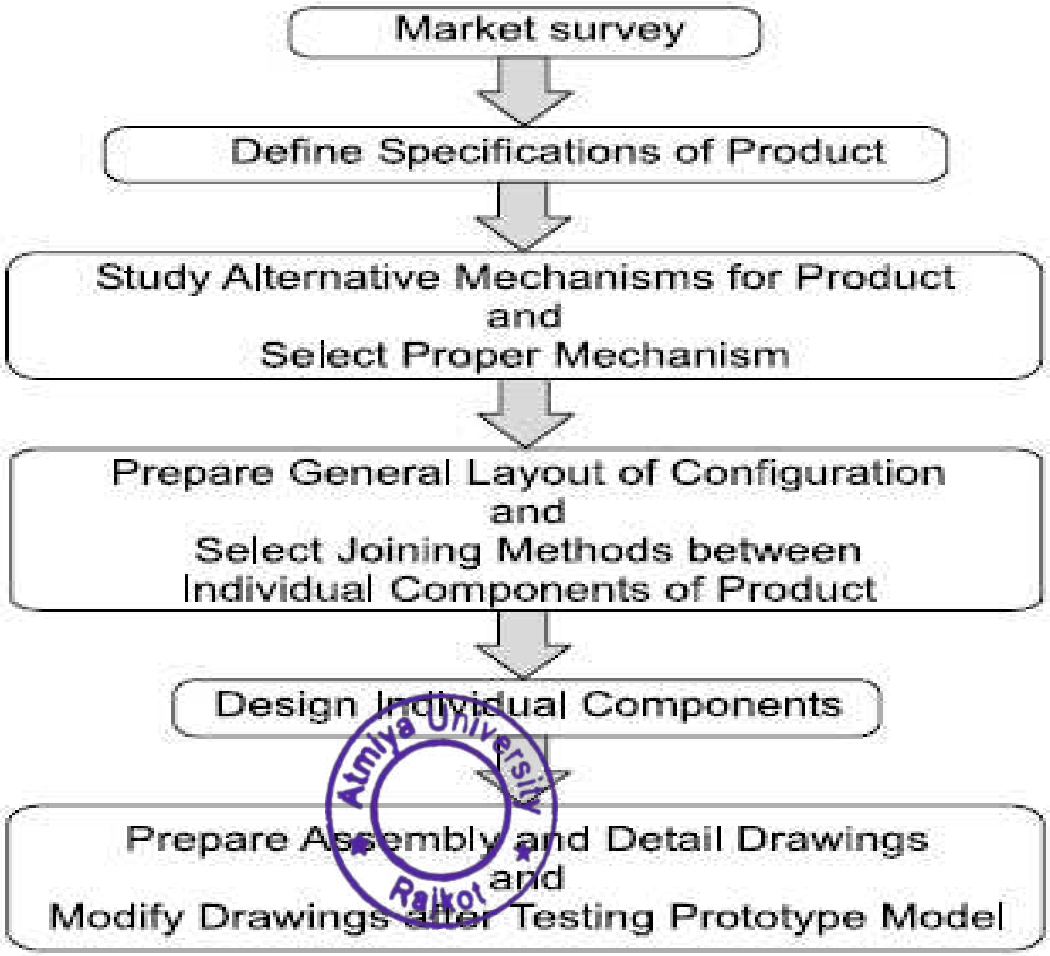

Atmiya University Rajkot

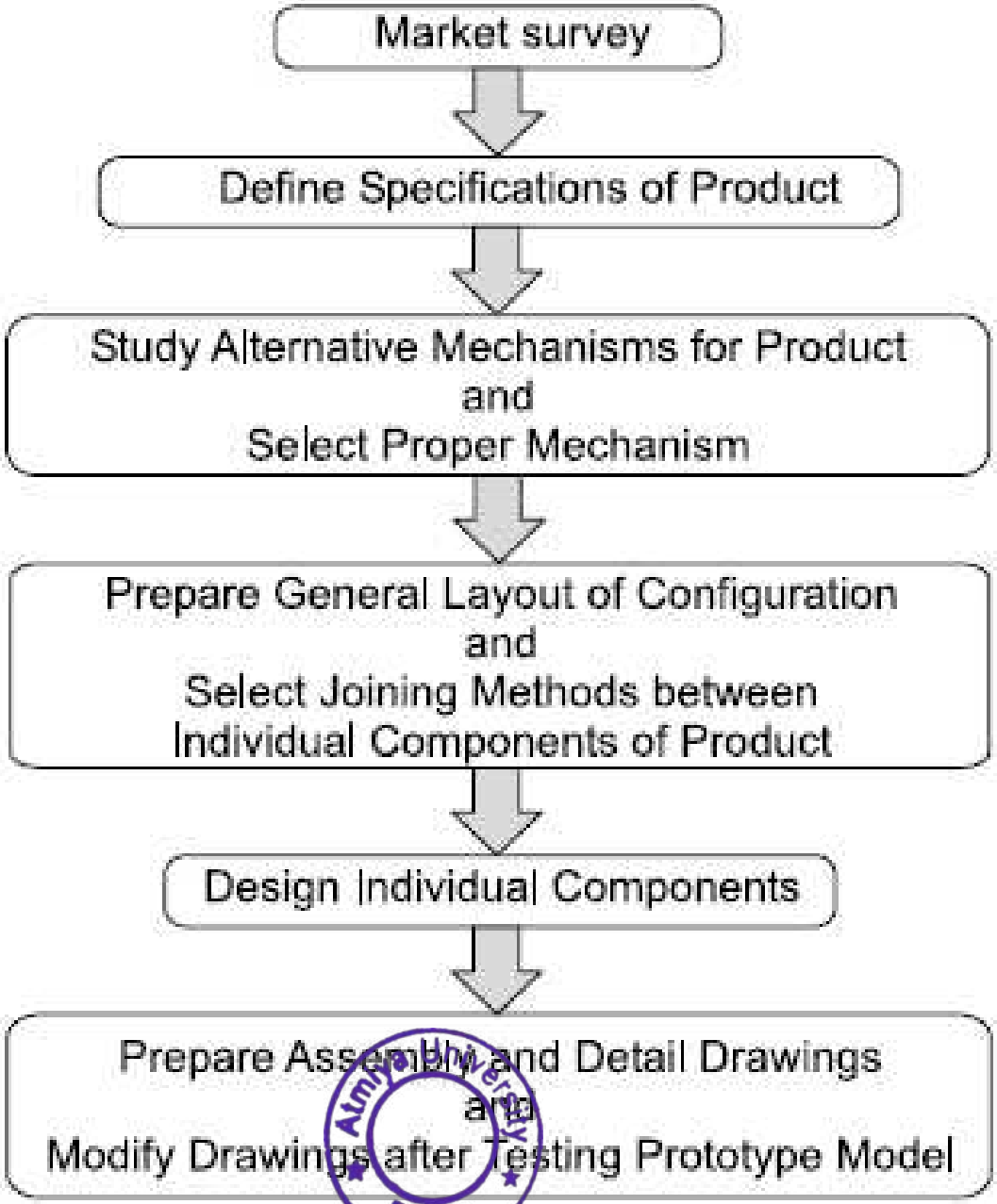

Figure:- The Design Process

Atmiya University Rajkot

Step 1: Product Specifications

- The first step consists of preparing a complete list of the requirements of the product.
- The requirements include the output capacity of the machine, and its service life, cost and reliability.
- In some cases, the overall dimensions and weight of the product are specified.
- For example, while designing a scooter, the list of specifications will be as follows:

(i) Fuel consumption = 40 km/l

(ii) Maximum speed = 85 km/hr

(iii) Carrying capacity = two persons with 10 kg luggage

(iv) Overall dimensions

- Width = 700 mm
- Length = 1750 mm
- Height = 1000 mm

(v) Weight = 95 kg

(vi) Cost = Rs 40000 to Rs 45000

Atmiya University Rajkot

Step 2: Selection of Mechanism

- After careful study of the requirements, the designer prepares rough sketches of different possible mechanisms for the product.
- For example, while designing a press the following mechanisms are possible:

1. A mechanism involving the crank and connecting rod, converting the rotary motion of the electric motor into the reciprocating motion of the punch.
2. A mechanism consisting of a hydraulic cylinder, piston and valves which is a costly configuration but highly efficient.

- The alternative mechanisms are compare with each other and also with the mechanism of the products that are available in the market.
- An approximate estimation of the cost of each alternative configuration is made and compared with the cost of existing products.
- While selecting the final configuration, the designer should consider whether the raw materials and standard parts required for making the product are available in the market.
- Depending upon the cost competitiveness, availability of raw materials and manufacturing facility, the best possible mechanism is selected for the product.

Atmiya University Rajkot

Step 3: Layout of Configuration

- The next step in a design procedure is to prepare a block diagram showing the general layout of the selected configuration.
- For example, the layout of an Electrically-operated Overhead Travelling (EOT) crane will consist of the following components:

(i) electric motor for power supply.

(ii) flexible coupling to connect the motor shaft to the clutch shaft.

(iii) clutch to connect or disconnect the electric motor at the will of the operator.

(iv) gear box to reduce the speed from 1440 rpm to about 15 rpm.

(v) rope drum to convert the rotary motion of the shaft to the linear motion of the wire rope.

(vi) wire rope and pulley with the crane hook to attach the load.

(vii) brake to stop the motion.

- In this step, the designer specifies the joining methods, such as riveting, bolting or welding to connect the individual components.
- Rough sketches of shapes of the individual parts are prepared.

Atmiya University Rajkot

Step 4: Design of Individual Components

- The design of individual components or machine elements is an important step in a design process.
- It consists of the following stages:

1. Determine the forces acting on the component.
2. Select proper material for the component depending upon the functional requirements such as strength, rigidity, hardness and wear resistance.
3. Determine the mode of failure for the component.
4. Determine the geometric dimensions of the component using a suitable factor of safety and modify the dimensions from assembly and manufacturing considerations.

- This stage involves detailed stress and deflection analysis.

Atmiya University Rajkot

Step 5: Preparation of Drawings

- The last stage in a design process is to prepare drawings of the assembly and the individual components.
- On these drawings, the material of the component, its dimensions, tolerances, surface finish grades and machining symbols are specified.
- A prototype model is prepared for the product and thoroughly tested before finalising the assembly drawings.

Atmiya University
Rajkot

BASIC REQUIREMENTS OF MACHINE ELEMENTS

- The broad objective of designing a machine element is to ensure that it preserves its operating capacity during the stipulated service life with minimum manufacturing and operating costs.
- In order to achieve this objective, the machine element should satisfy the following basic requirements:

1. Strength
2. Rigidity
3. Wear Resistance
4. Minimum Dimensions and Weight
5. Manufacturability
6. Safety
7. Conformance to Standards
8. Reliability
9. Maintainability
10. Minimum: Life-cycle Cost

Atmiya University Rajkot

BASIC REQUIREMENTS OF MACHINE ELEMENTS

Atmiya University Rajkot

BASIC PROCEDURE FOR DESIGN OF MACHINE ELEMENTS

- Design of machine elements is the most important step in the complete procedure of machine design.
- In order to ensure the basic requirements of machine elements, calculations are carried out to find out the dimensions of the machine elements.
- These calculations form an integral part of the design of machine elements.
- The basic procedure of the design of machine elements consists of the following steps.

Atmiya University Rajkot

BASIC PROCEDURE FOR DESIGN OF MACHINE ELEMENTS

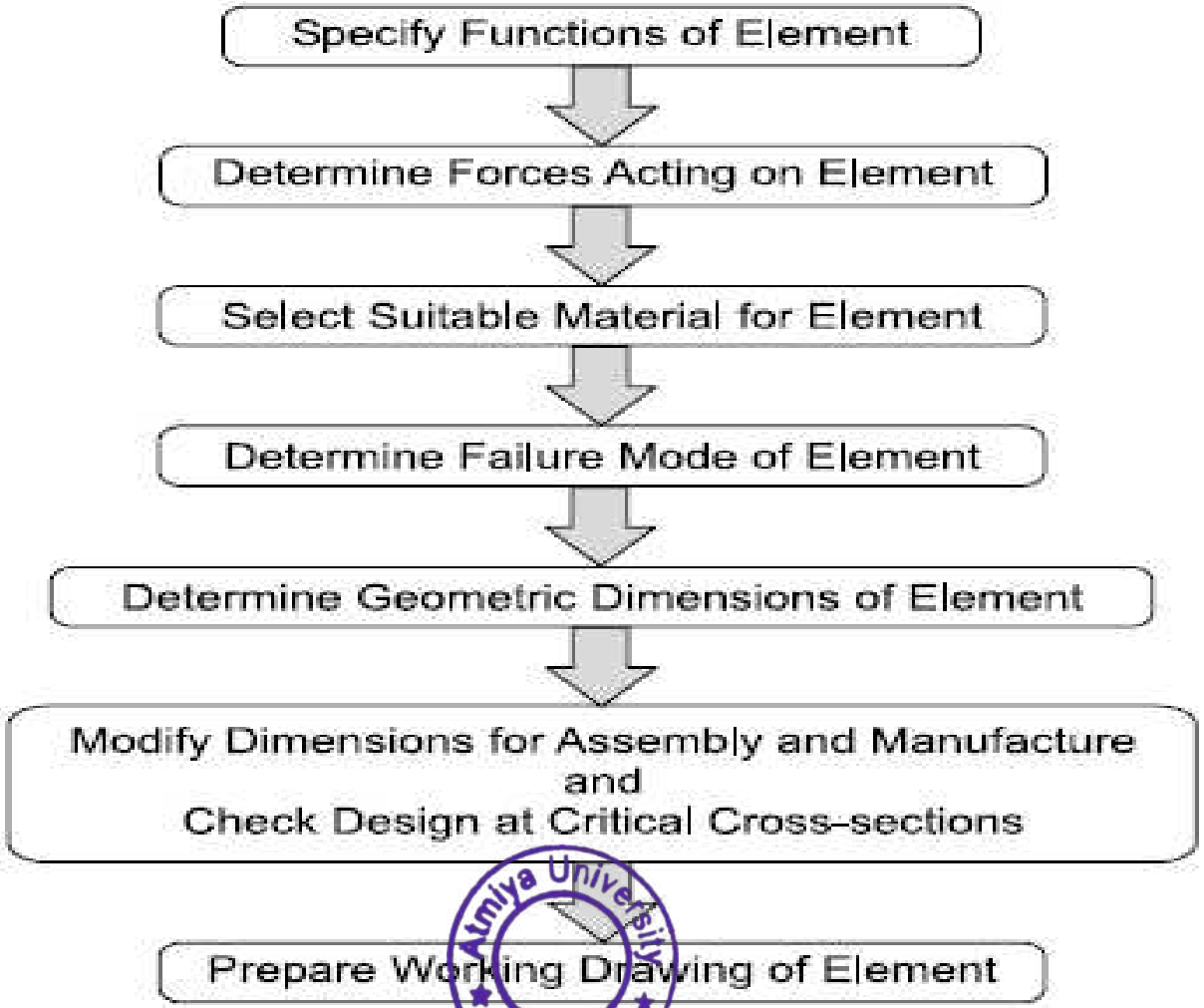

Atmiya University Rajkot

Fig. Basic Procedure of DME

Step 1: Specification of Function

- The design of machine elements begins with the specification of the functions of the element.
- The functions of some machine elements are as follows:

1. Shaft:- To transmit power or torque to other rotating parts.
2. Bearing:- To support the rotating shaft and confine its motion.
3. Spring in Clock:- To store and release the energy.
4. Gear:- To transfer motion and torque between machine components in mechanical devices.

Atmiya University Rajkot

Step 2: Determination of Forces

- A free-body diagram of forces is constructed to determine the forces acting on different parts of the machine.
- The external and internal forces are acting on a machine element.

(i) The external force due to energy, power or torque transmitted by the machine part, often called 'useful' load.

(ii) Static force due to deadweight of the machine part.

(iii) Force due to frictional resistance.

(iv) Inertia force due to change in linear or angular velocity.

(v) Centrifugal force due to change in direction of velocity.

(vi) Force due to thermal gradient or variation in temperature.

(vii) Force set up during manufacturing the part resulting in residual stresses.

(viii) Force due to particular shape of the part such as stress concentration due to abrupt change in cross-section.

Atmiya University Rajkot

Step 3: Selection of Material

- Selection of a proper material for the machine component is one of the most important steps in the process of machine design.
- The best material is one which will serve the desired purpose at minimum cost.
- It is not always easy to select such a material and the process may involve the trial & error method.
- The factors which should be considered while selecting the material for a machine component are as follows:-

1. Availability
2. Cost
3. Mechanical properties
4. Manufacturing considerations

➢ **Availability:-**

- The material should be readily available in market, in large enough quantities to meet the requirement.

Atmiya University Rajkot

Step 3: Selection of Material

- CI and Al Alloys are always available in abundance while the shortage of lead and copper alloy is a common experience.

➢ **Cost:-**

- For every application, there is a limiting cost beyond which the designer cannot go.
- When this limit is exceeded, the designer has to consider other alternative materials.
- In cost analysis, there are mainly two factors, namely i.e cost of material & the cost of processing the material into finished goods.
- It is likely that the cost of material might be low, but the processing may involve costly manufacturing operations.

➢ **Mechanical Properties:-**

- Mechanical properties are the most important technical factor governing the selection of material.
- They include the strength under static & fluctuating loads, elasticity, plasticity, stiffness, resilience, toughness, ductility, malleability and hardness.

Atmiya University Rajkot

Step 3: Selection of Material

- Depending upon the service conditions and the functional requirement, different mechanical properties are considered and a suitable material is selected.
- For e.g- The material for the connecting rod of an IC engine should be capable to withstand the fluctuating stresses induced due to combustion of fuel.
- In this case, endurance limit becomes the criterion of selection.
- The piston rings should have a hard surface to resist wear due to rubbing action with the cylinder surface and surface hardness is the selection criterion.
- The material for automobile bodies should have the ability to be extensively deformed in plastic range without fracture, and plasticity is the criterion of material selection.

➢ **Manufacturing Considerations:-**

- In some application, machinability of material is an important consideration in selection.
- Sometimes an expensive material is more economical than a low priced one which is difficult to machine.
- Free cutting steels have excellent machinability, which is an important factor in their selection for high strength bolts, axles & shafts.

Atmiya University Rajkot

Step 3: Selection of Material

- Where the product is of complex shape, ability of the molten metal to flow into intricate passages is the criterion of material selection.
- In fabricated assemblies of plates & rods, weldability becomes the governing factor.
- The manufacturing processes such as casting, forging, welding, extrusion and machining govern the selection of material.

Atmiya University Rajkot

Step 4: Failure Criterion

- Before finding out the dimensions of the component, it is necessary to know the type of failure that the component may fail when put into service.
- The machine component is said to have 'failed' when it is unable to perform its functions satisfactorily.
- Three basic types of failure are as follows:

1. Failure by elastic deflection
2. Failure by general yielding
3. Failure by fracture

- In applications like transmission shaft, which is used to support gears, the maximum force acting on the shaft is limited by the permissible deflection.
- When this deflection exceeds a particular value (usually, 0.001 to 0.003 times of span length between two bearings), the meshing between teeth of gears is affected and the shaft cannot perform its function properly.
- In this case, the shaft is said to have 'failed' due to elastic deflection.
- Components made of ductile materials like steel lose their engineering usefulness due to large amount of plastic deformation.

Atmiya University Rajkot

Step 4: Failure Criterion

- This type of failure is called failure by yielding.
- Components made of brittle materials like cast iron fail because of sudden fracture without any plastic deformation.
- There are two basic modes of gear-tooth failure — breakage of tooth due to static and dynamic load and surface pitting.
- The surface of the gear tooth is covered with small 'pits' resulting in rapid wear. Pitting is a surface fatigue failure.
- The components of ball bearings such as rolling elements, inner and outer races fail due to fatigue cracks after certain number of revolutions.
- Sliding contact bearings fail due to corrosion and abrasive wear by foreign particles.

Atmiya University Rajkot

Step 5: Determination of Dimensions

- The shape of the machine element depends on two factors:-

1. The operating conditions
2. Shape of the adjoining machine element

- For example, involute profile is used for gear teeth because it satisfies the fundamental law of gearing.
- A V-belt has a trapezoidal cross-section because it results in wedge action and increases the force of friction between the surfaces of the belt and the pulley.
- On the other hand, the pulley of a V-belt should have a shape which will match with the adjoining belt.
- The profile of the teeth of sprocket wheel should match the roller, bushing, inner and outer link plates of the roller chain.
- Depending on the operating conditions and shape of the adjoining element, the shape of the machine element is decided and a rough sketch is prepared.
- The geometric dimensions of the component are determined on the basis of failure criterion.
- The dimensions are determined on the basis of allowable stress or deflection.

Atmiya University Rajkot

Step 5: Determination of Dimensions

- Determination of geometric dimensions is an important step while designing machine elements.

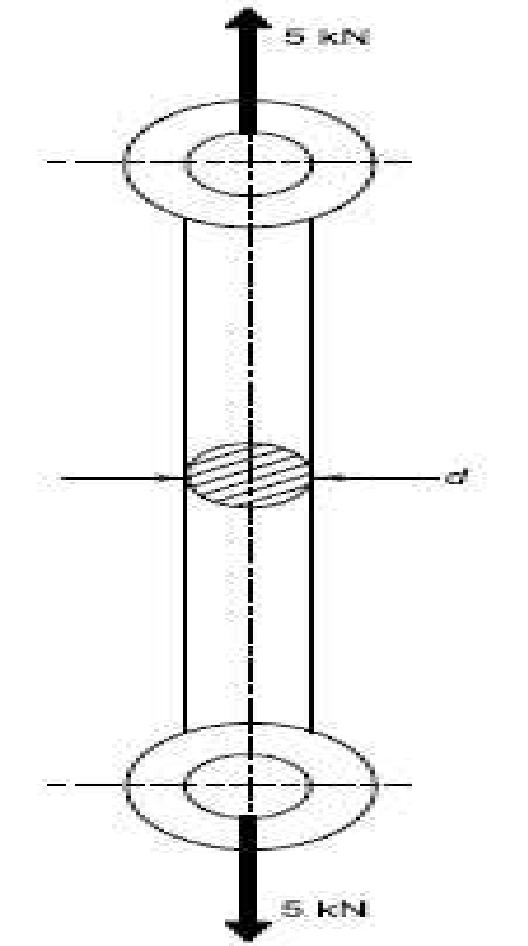

Tension Rod

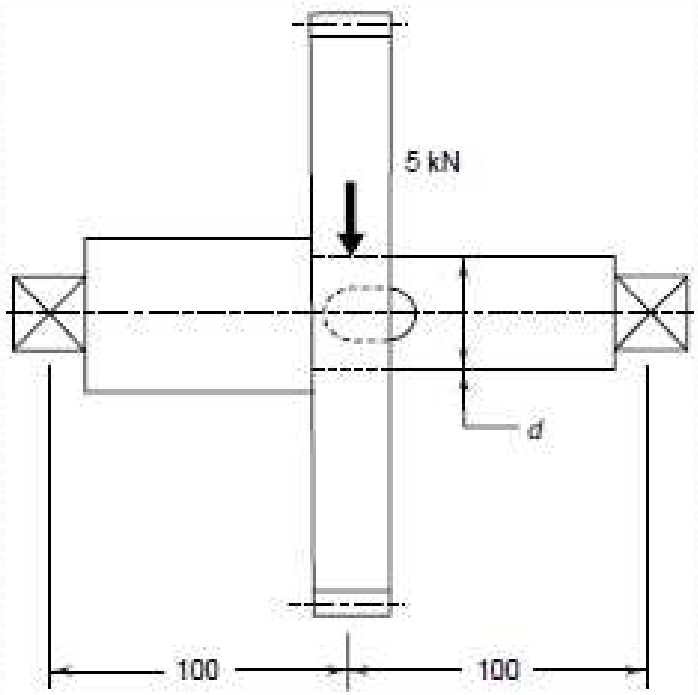

Transmission Shaft

Atmiya University Rajkot

Step 6: Design Modifications

- The geometric dimensions of the machine element are modified from assembly and manufacturing considerations.
- For example, the transmission shaft illustrated in figure (Slide No. 28) is provided with steps and shoulders for proper mounting of gear and bearings.
- Revised calculations are carried out for operating capacity, margin of safety at critical cross-sections and resultant stresses taking into consideration the effect of stress concentration.
- The process is continued till the desired values of operating capacity, factor of safety and stresses at critical cross-sections are obtained.
- When these values differ from desired values, the dimensions of the component are modified.
- The process is continued till the desired values of operating capacity, factor of safety and stresses at critical cross-sections are obtained.

Atmiya University Rajkot

Step 7: Working Drawing

- The last step in the design of machine elements is to prepare a working drawing of the machine element showing dimensions, tolerances, surface finish grades, geometric tolerances and special production requirements like heat treatment.
- The working drawing must be clear, concise and complete.
- It must have enough views and cross sections to show all details.
- Every dimension must be given.
- All dimensions that are important for proper assembly and interchangeability must be provided with tolerances.

Atmiya University Rajkot

Design Consideration in Casting

1. Always keep the stressed areas of the part in compression

- CI has more compressive strength than its tensile strength.
- The balanced section with equal areas in tension and compression are not suitable for CI components.
- The castings should be placed in such a way that they are subjected to compressive stresses rather than tensile stresses as shown in figure below.
- When tensile stresses are unavoidable, a clamping device such as tie rod or a bearing cap as shown in figure should be used.
- The clamping device relieves the CI components from tensile stresses

Atmiya University Rajkot

Design Consideration in Casting

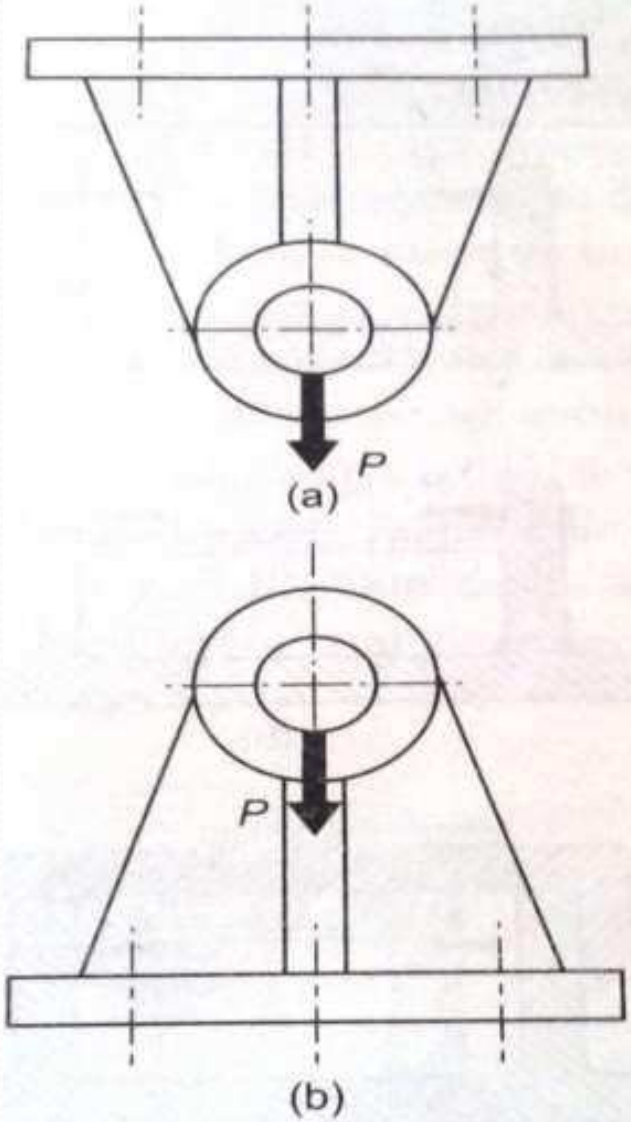

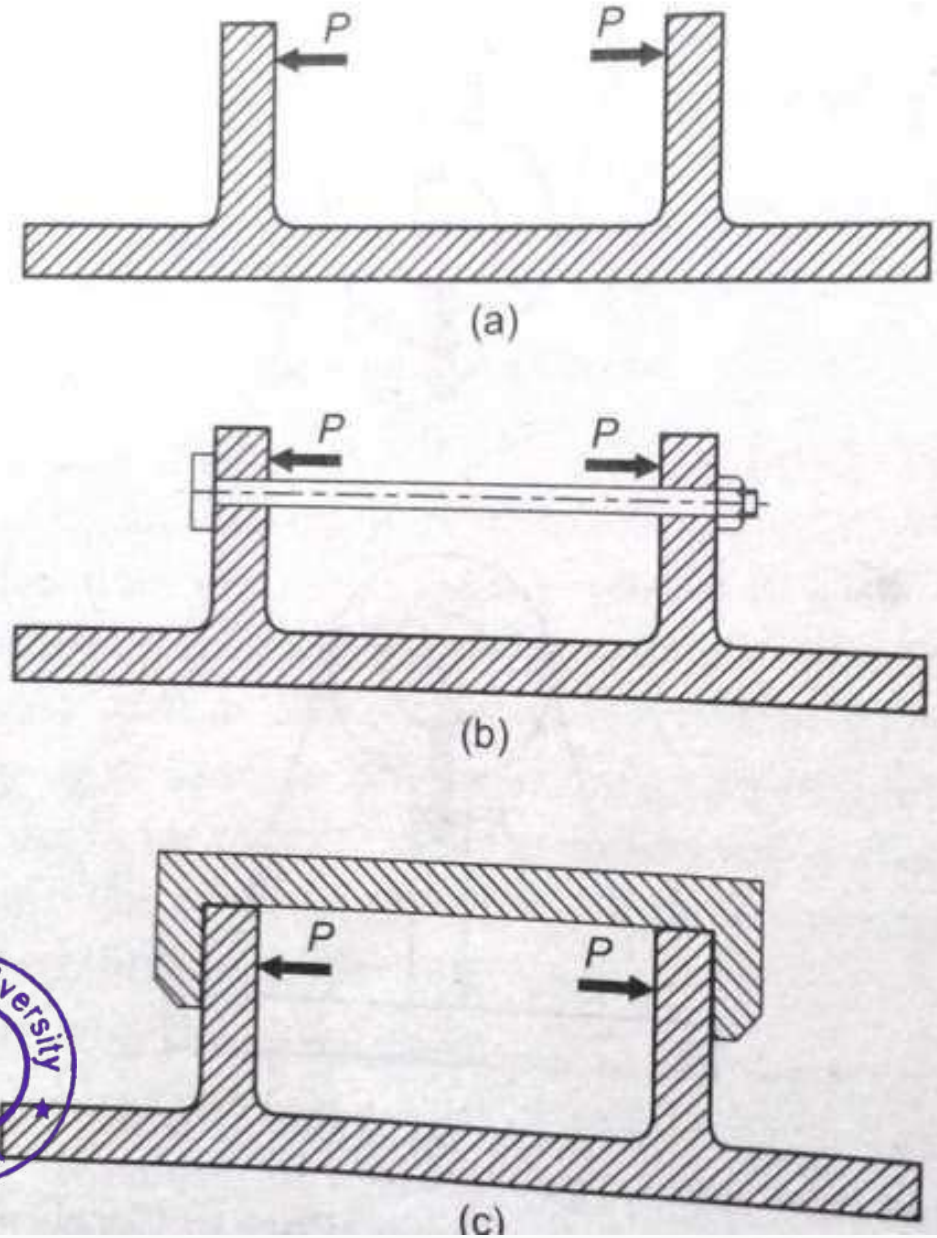

(a) Incorrect (Part in Tension)
(b) Correct (Part in Compression)

Atmiya University Rajkot

Design Consideration in Casting

2. Round all external corners

- It has 2 advantages – It increases the endurance limit of the component and reduces the formation of brittle chilled edges.
- When the metal in the corner cools faster than the metal adjacent to the corner, brittle chilled edges are formed due to iron carbide.
- Appropriate fillet **radius as shown in figure** reduces the stress concentration.
- The values of the corner radii for the different section **thickness are given in the table.**

Wall thickness (mm)	*Inside corner radius (mm) (minimum)*
0–30	10
30–50	15
50–80	20
80–120	30

Atmiya University Rajkot

Design Consideration in Casting

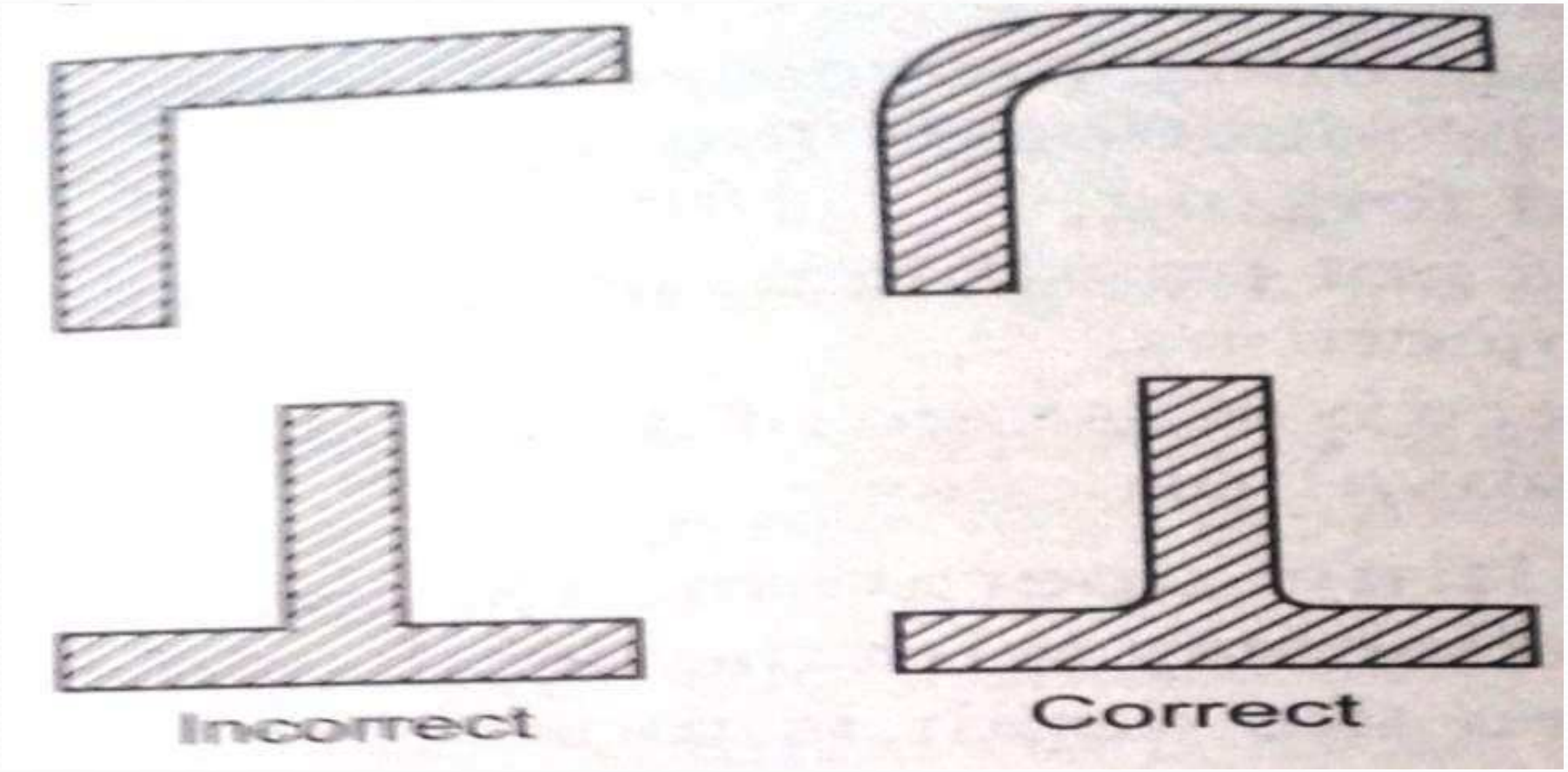

Atmiya University
Rajkot

Design Consideration in Casting

3. Wherever possible the section thickness throughout should be held as uniform as compatible with overall design consideration

- Abrupt changes in cross section result in high stress concentration.
- If the thickness is to be varies at all, the change should be gradual **as shown in figure below**.

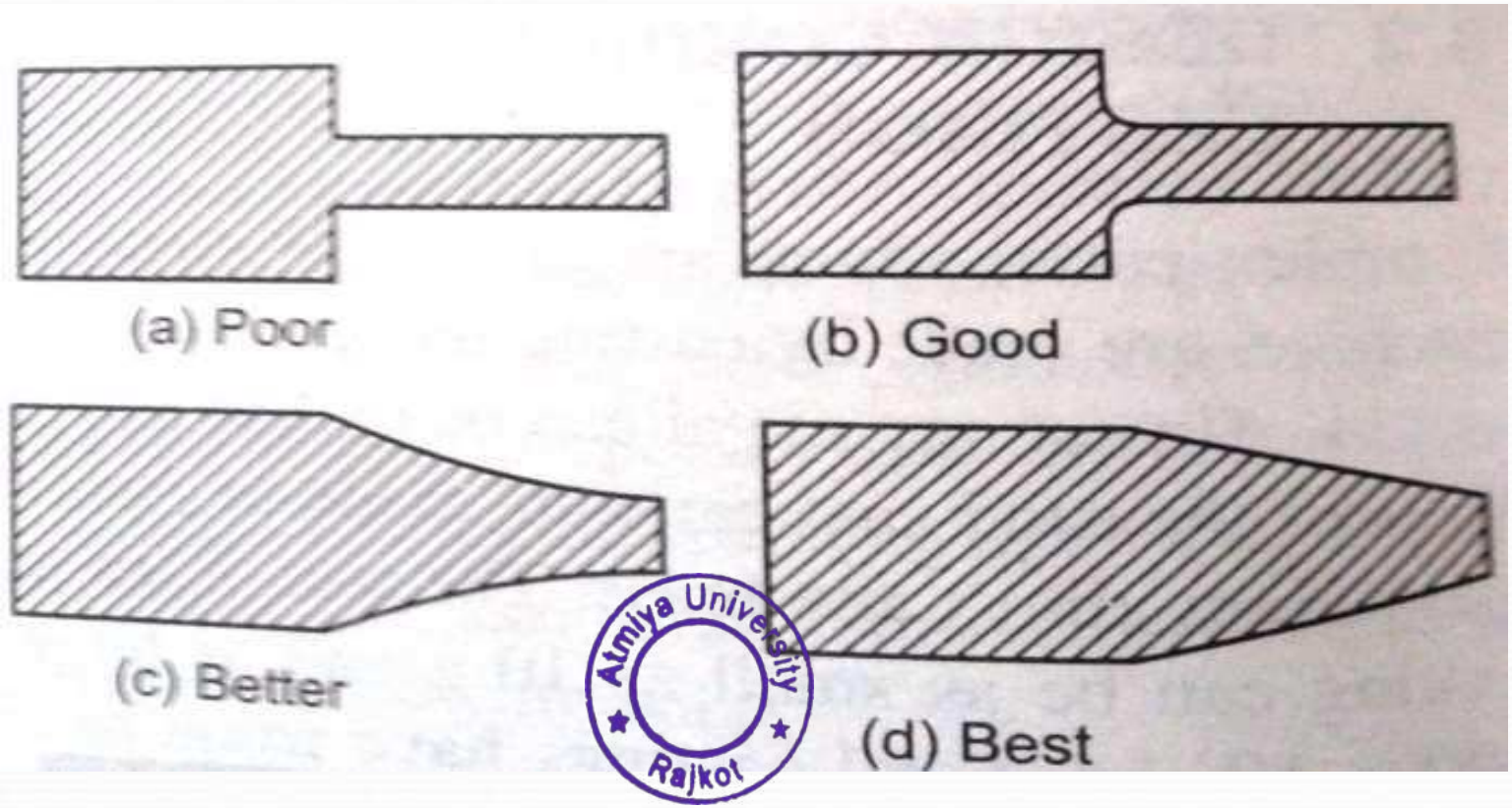

Design Consideration in Casting

4. Avoid very thin sections

- If the thickness of a CI Component is calculated from strength considerations, it is often too small.
- In such cases, the thickness should be increased to certain practical proportions.
- The minimum section thickness depends upon the process of casting, such as sand casting, permanent mould or die casting.
- The minimum thickness for grey CI component is about 7 mm for parts upto 500 mm long, which gradually increases to 20 mm for large & heavy castings.

Atmiya University Rajkot

Design Consideration in Casting

5. Make provision for easy removal of pattern from the mould

- Casting should be designed so that the pattern can be removed from the mould without any difficulty.
- A minimum draft or taper of 3 degree should be provided on vertical surfaces so that the pattern can be removed from the mould.

6. Avoid Concentration of Metal at junction

- At the junction as shown in figure below, there is a concentration of metal.
- Even after metal on the surface solidifies, the central portion still remains in the molten stage, with the result that a shrinkage cavity or blowhole may appear at the centre.
- In order to avoid the concentration of metal – one is to provide cored opening in webs and ribs as shown in figure.

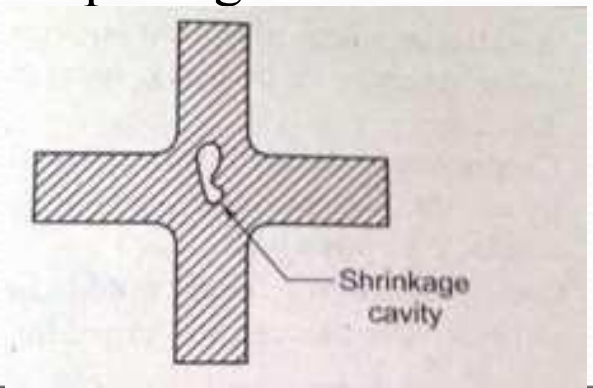

Atmiya University
Rajkot

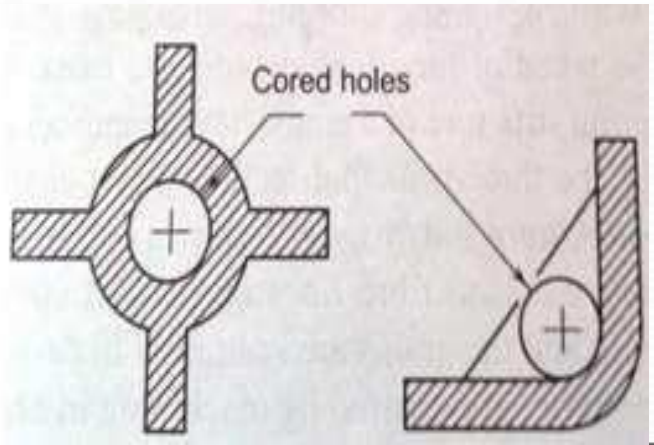

Design Consideration in Casting

1. The sharp corners and frequent use of fillets should be avoided in order to avoid concentration of stresses.
2. All sections in a casting should be designed of uniform thickness, as far as possible. If, however, variation is unavoidable, it should be done gradually.
3. An abrupt change of an extremely thick section into a very thin section should always be avoided.
4. The casting should be designed as simple as possible, but with a good appearance.
5. Large flat surfaces on the casting should be avoided because it is difficult to obtain true surfaces on large castings.
6. In designing a casting, the various allowances must be provided in making a pattern.
7. The ability to withstand contraction stresses of some members of the casting may be improved by providing the curved shapes *e.g.*, the arms of pulleys and wheels.
8. The stiffening members such as webs and ribs used on a casting should be minimum possible in number, as they may give rise to various defects like hot tears and shrinkage, etc.
9. The casting should be designed in such a way that it will require a simpler pattern and its moulding is easier.
10. In order to design cores for casting, due consideration should be given to provide them adequate support in the mould.

Atmiya University Rajkot

Design Consideration in Forging

1. **While designing a forging, advantage should be taken of the direction of fibre lines.**

- The grain structure of crankshaft, manufactured by the three principle methods i.e casting, machining, & forging as shown in figure.
- There are no fibre lines in cast components and the grains are scattered. In case of a component prepared by machining methods, such as turning or milling, the original fibre lines are broken.
- It is only in case of forged parts that the fibre lines are arranged in a favourable way to withstand stresses due to external load.
- While designing a forging, profile is selected in such a way that fibre lines are parallel to tensile forces and perpendicular to shear forces. Machining that cuts deep into the forging, should be avoided, otherwise the fibre lines are broken and the part becomes weak.

Atmiya University Rajkot

Design Consideration in Forging

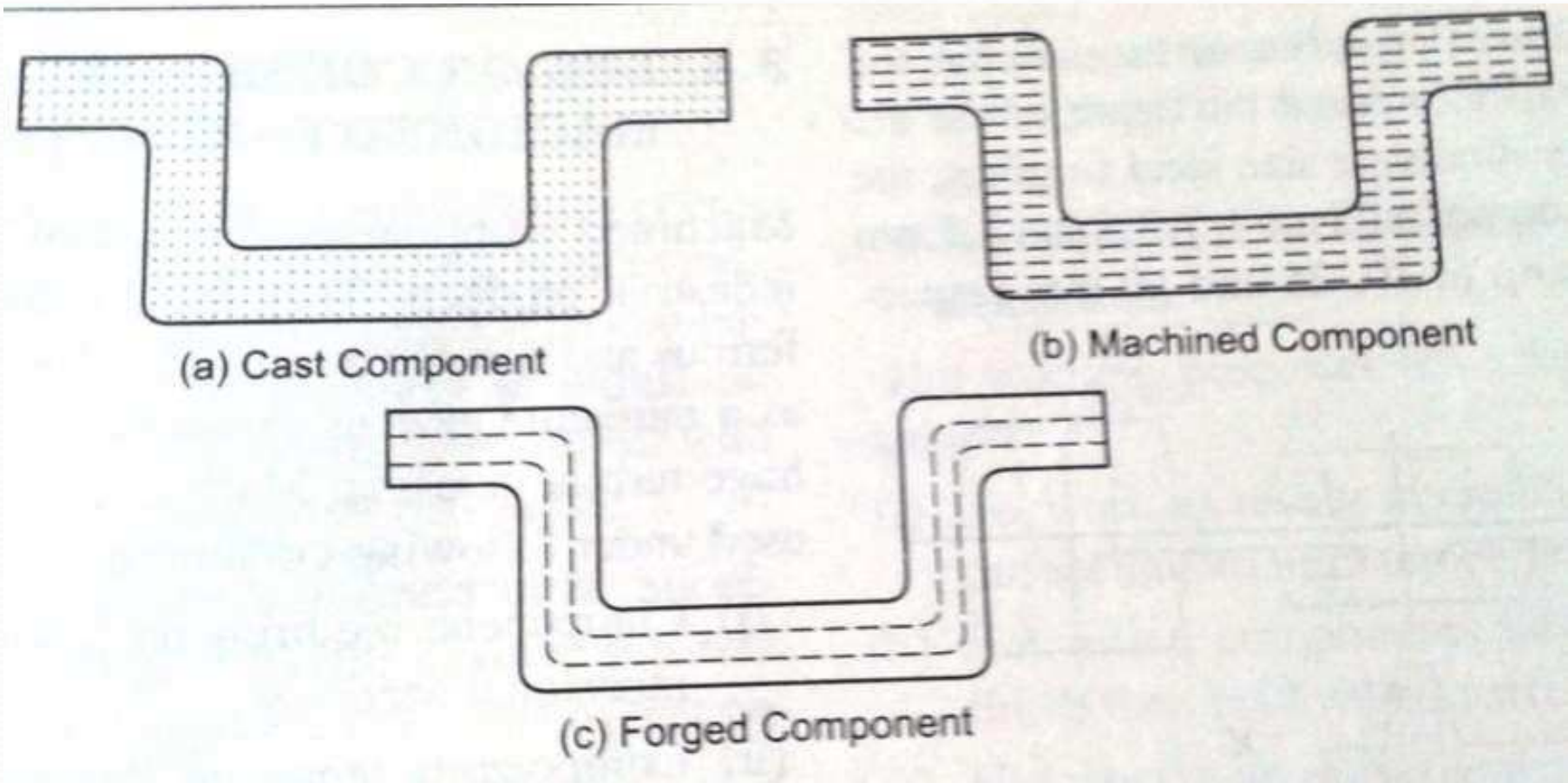

Atmiya University
Rajkot

Design Consideration in Forging

2. The forged component should be provided with an adequate draft

- As shown in figure, the draft angle is provided for an easy removal of the part from the die impressions.
- The angles alpha & beta are drafts for outside and inside surfaces.
- For steels the recommended values of alpha & beta are 7 degree & 10 degree.

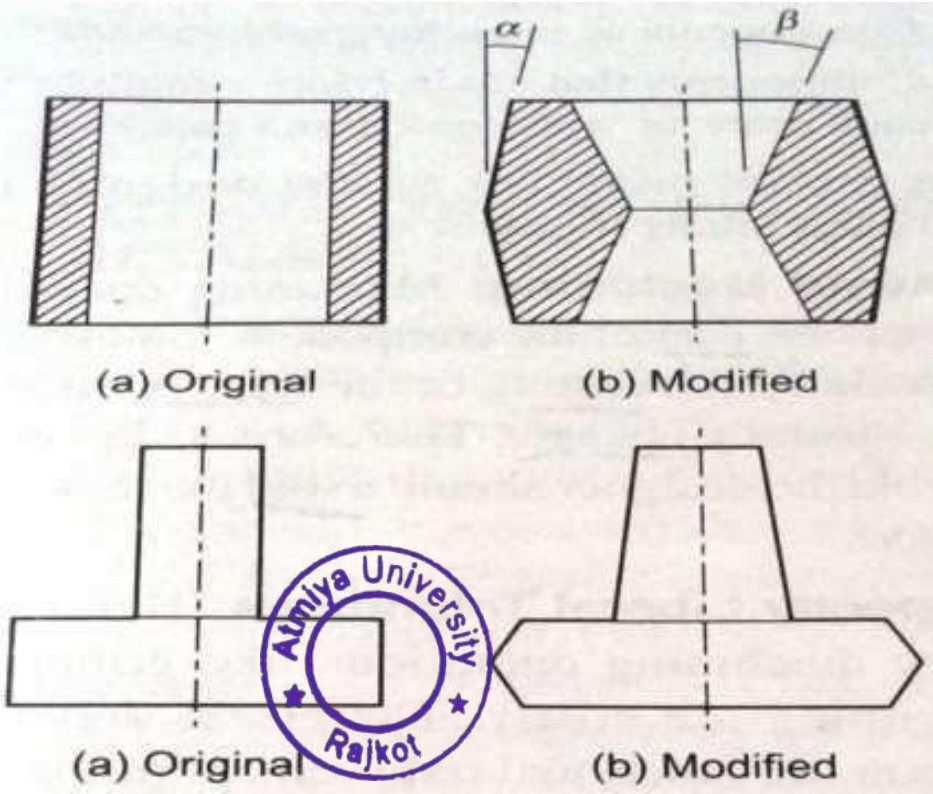

Atmiya University Rajkot

Design Consideration in Forging

3. There are two important terms related to forgings as shown in figure below.

- The parting line is a line in which the two halves of the forging dies meet and in which flash is formed.
- A forging plane is a plane that is perpendicular to the die motion. In most of the cases the parting line and the forging plane coincide.
- There are 2 basic principles for the location of parting line – the parting line should be in one plane as far as possible and it should divide the forging into 2 equal parts.
- When the parting line is broken it results in unbalance forging forces, which tends to displace the 2 die halves.

Atmiya University Rajkot

Design Consideration in Forging

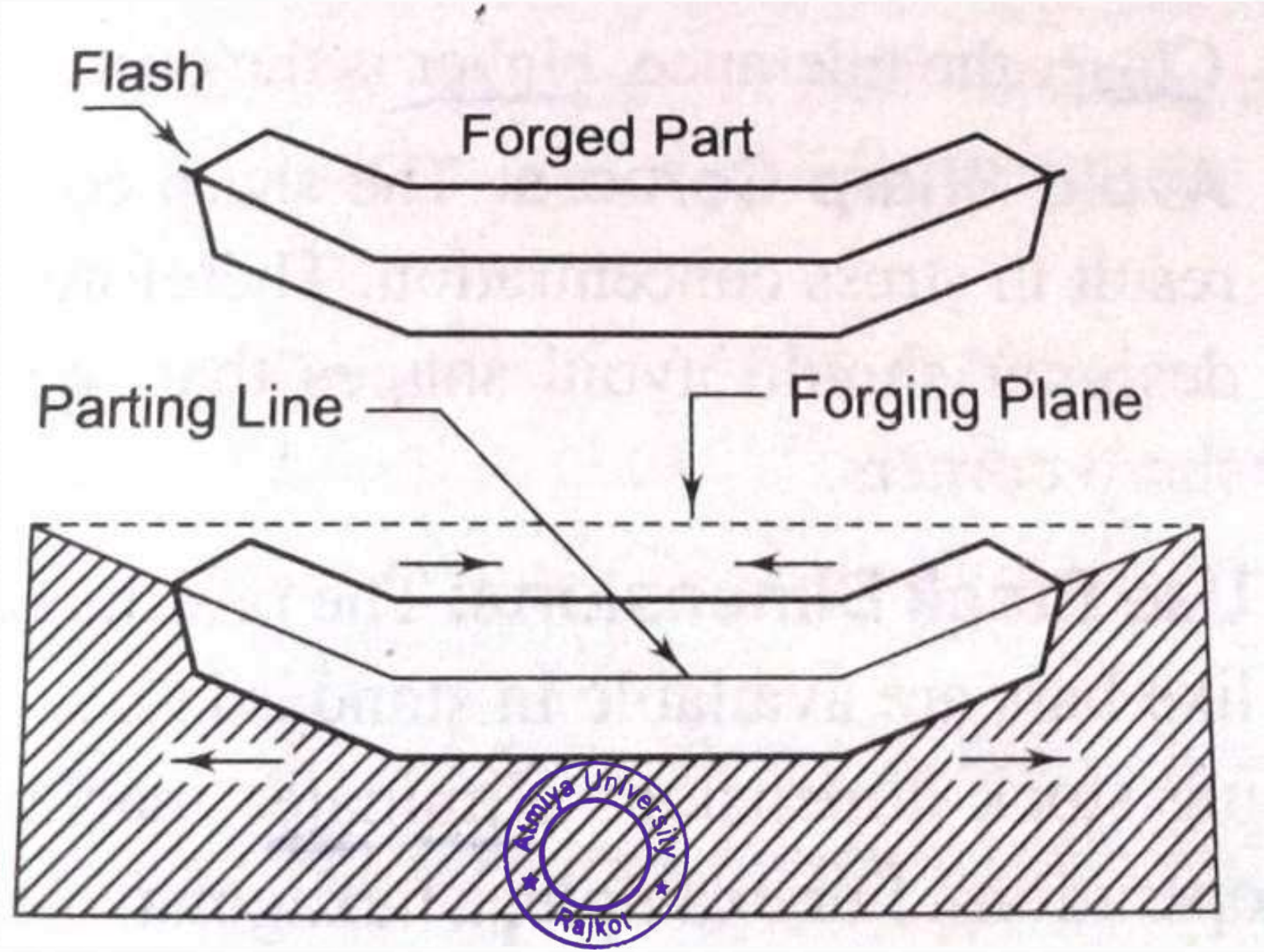

Design Consideration in Forging

4. The forging should be provided with adequate fillet and corner radii.

- Small radius results in folds on the inner surface and cracks on the outer surface. Large radius is undesirable particularly if the forged component is to be machined, during which the fibre lines are broken.
- Sharp corners result in increasing difficulties in filling the material, excessive forging forces, and poor die life. The magnitude of fillet radius depends on the material, size of forging and the depth of the die cavity.
- For the moderate size steel forgings the minimum corner radii are 1.5,2.5 & 3.5 mm for the depths upto 10, 25 & 50 mm respectively.

5. Thin section and the ribs should be avoided in forged components.

- A thin section cools at a faster rate in the die cavity and requires excessive force for plastic deformation.
- It reduces the life of the die and the removal of the component from the die cavities becomes difficult.
- For steel forgings, the recommended value of the minimum section thickness is 3 mm.

Atmiya University Rajkot

Design Consideration in Forging

1. The forged components should ultimately be able to achieve a radial flow of grains or fibres.
2. The forgings which are likely to carry flash, such as drop and press forgings, should preferably have the parting line in such a way that the same will divide them in two equal halves.
3. The parting line of a forging should lie, as far as possible, in one plane.
4. Sufficient draft on surfaces should be provided to facilitate easy removal of forgings from dies.
5. The sharp corners should always be avoided in order to prevent concentration of stress and to facilitate ease in forging.
6. The pockets and recesses in forgings should be minimum in order to avoid increased die wear.
7. The ribs should not be high and thin.
8. Too thin sections should be avoided to facilitate easy flow of metal.

Atmiya University Rajkot

Design Consideration in Welding

1. Select the material with high weldability

- A low carbon steel is more easily welded than a high carbon steel.
- Higher carbon content tends to harden the welded joint as a result of which the weld is susceptible to cracks.
- For ease in welding, maximum carbon percentage is limited to 0.22%.

2. Use Minimum number of welds

- Distortion is a serious problem in welded assemblies.
- It creates difficulties in maintaining correct shape, dimensions & tolerances of finished assemblies.
- In welding only the adjoining area of the joint is heated up, which has no freedom to expand or contract.
- Uneven expansion and contraction in this adjoining area and the parent metal results in distortion.
- When distortion is prevented by clamping fixtures, residual stresses are built up in the parts and annealing is required to relieve these stresses.

Atmiya University Rajkot

Design Consideration in welding

- Since distortion always occurs in welding , the design should involve minimum number of welds and avoid over welding.
- It will not only reduce the distortion but also the cost.

3. Use standard components

- The designer should specify the standard sizes for plates, bars and rolled sections.
- Non-standard section involves flame cutting of plates & additional welds.
- As far as possible, the designer should select plates of equal thickness for a butt joint.

4. Select proper location of weld

- There are 2 aspects of selecting correct location for a welded joint.
- The welded joint should be located in an area where the stresses and deflection are not critical.
- It should be located at such a place that welder and welding machine has unobstructed access to the location.

Atmiya University Rajkot

Design Consideration in welding

- It should be possible to carry out pre-weld machining, post- weld heat treatment and finally weld inspection at the location of the weld.

5. Prescribe the correct sequence of welding

- The designer should consider the correct sequence in which the parts should be welded together for minimum distortion.
- This is particularly important for a complex job involving no. of welds.
- An incorrect sequence of welding causes distortion and sometimes cracks in the weld metal due to stress concentration at some point in fabrication.
- A correct welding sequence distributes and balances the forces and stresses induced by weld contraction.

6. Avoid straps & stiffners unless required for strength. Use of separate stiffners involves additional welding, increasing distortion and cost.

Atmiya University Rajkot

Design Consideration in welding

1. Select the metal with high weldability.
2. Use the minimum no. of welds.
3. Do not shape the parts based on castings or forgings.
4. Use standard components.
5. Avoid straps, laps and stiffeners.
6. Select proper location for the weld.
7. Prescribe correct sequence of welding.

Atmiya University Rajkot

Design against fluctuating load

❖ **Introduction:-**

- In design of machine elements, the following three fundamental equations are used,

$$\sigma_t = \frac{P}{A}$$

$$\sigma_b = \frac{M_b y}{I}$$

$$\tau = \frac{M_t r}{J}$$

- The above equations are called *elementary* equations. These equations are based on a number of assumptions

Atmiya University Rajkot

- One of the assumptions is that there are no discontinuities in the cross-section of the component.
- However, in practice, discontinuities and abrupt changes in cross-section are unavoidable due to certain features of the component such as oil holes and grooves, keyways and splines, screw threads and shoulders.
- Therefore, it cannot be assumed that the cross-section of the machine component is uniform.
- Under these circumstances, the 'elementary' equations do not give correct results.

Atmiya University
Rajkot

Stress Concentration

- Stress concentration is defined as the localization of high stresses due to the irregularities present in the component and abrupt changes of the cross section.

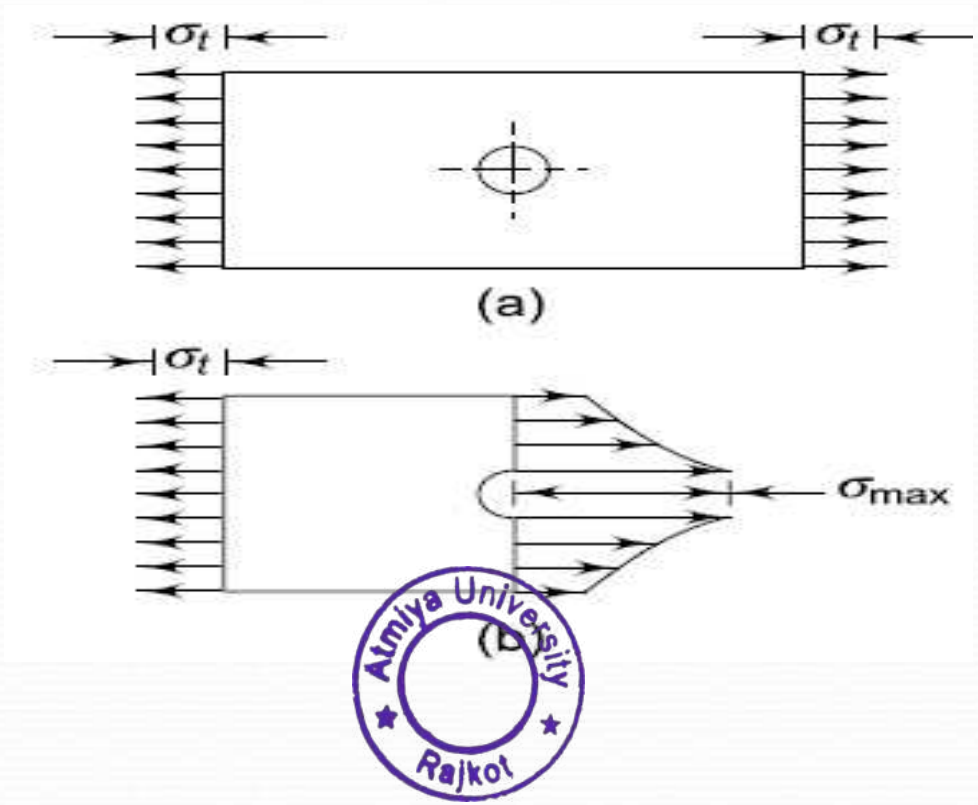

Atmiya University Rajkot

stress concentration factor

- It is denoted by *Kt and defined as,*

$$K_t = \frac{\text{Highest value of actual stress near discontinuity}}{\text{Nominal stress obtained by elementary equations for minimum croos-section}}$$

or

$$K_t = \frac{\sigma_{max.}}{\sigma_0} = \frac{\tau_{max.}}{\tau_0}$$

- where *σo and τo are stresses determined by elementary* equations and *σmax. and τmax. are localized stresses* at the discontinuities.

Atmiya University Rajkot

- The subscript *t denotes* the '*theoretical' stress concentration factor.*
- The magnitude of stress concentration factor depends upon the geometry of the component.
- The causes of stress concentration are as follows:

1) ***Variation in Properties of Materials***
2) ***Load Application***
3) ***Abrupt Changes in Section***
4) ***Discontinuities in the Component***
5) ***Machining Scratches***

Atmiya University Rajkot

- The ductility or brittleness of the material has a pronounced effect on its response to stress concentration.
- the type of load— whether static or cyclic—affects the severity of stress concentration.
- There is a difference between the stress concentration indicated by the theoretical stress concentration factor and the actual stress concentration in the component.
- The designer should consider the following guidelines:
- ***(i) Ductile Materials Under Static Load:***
- Under a static load, ductile materials are not affected by stress concentration, to the extent that photo-elastic analysis might indicate.

Atmiya University Rajkot

- When the stress in the vicinity of the discontinuity reaches the yield point, there is plastic deformation, resulting in a redistribution of stresses.
- This plastic deformation or yielding is local and restricted to a very small area in the component.
- There is no perceptible damage to the part as a whole.
- It is common practice to ignore the theoretical stress concentration factor for components that are made of ductile materials and subjected to static load.

(ii) Ductile Materials Under Fluctuating Load

- When the load is fluctuating, the stress at the discontinuities may exceed the endurance limit and in that case the component may fail by fatigue.

Atmiya University Rajkot

- Endurance limit of the components made of ductile material is greatly reduced due to stress concentration.
- This accounts for the use of stress concentration factors for ductile components.
- some materials are more sensitive than others to stress raising notches under a fluctuating load.
- To account for this effect, a parameter called *notch sensitivity factor is found for each material.*
- The notch sensitivity factor is used to modify the theoretical stress concentration factor.

(iii) Brittle Materials:

- The effect of stress concentration is more severe in case of brittle materials, due to their inability of plastic deformation.
- Brittle materials do not yield locally and there is no readjustment of stresses at the discontinuities.

Atmiya University Rajkot

- Once the local stress at the discontinuity reaches the fracture strength, a crack is formed.
- This reduces the material available to resist external load and also increases the stress concentration at the crack.
- The part then quickly fails. Therefore, stress concentration factors are used for components made of brittle materials subjected to both static load as well as fluctuating load.

Atmiya University Rajkot

FLUCTUATING STRESSES

- The external forces acting on a machine component were assumed to be static.
- In many applications, the components are subjected to forces, which are not static, but vary in magnitude with respect to time.
- The stresses induced due to such forces are called *fluctuating stresses.*
- *It is observed that about 80% of failures of mechanical components are due to 'fatigue failure' resulting from fluctuating stresses.*
- In practice, the pattern of stress variation is irregular and unpredictable, as in case of stresses due to vibrations.

Atmiya University Rajkot

- For the purpose of design analysis, simple models for stress–time relationships are used.
- The most popular model for stress–time relationship is the *sine curve.*
- There are three types of mathematical models for cyclic stresses—fluctuating or alternating stresses, repeated stresses and reversed stresses.
- Stress–time relationships for these models are illustrated in Fig.
- In Fig. $\sigma_{max.}$ and $\sigma_{min.}$ are maximum and minimum stresses, while σ_m and σ_a are called mean stress and stress amplitude respectively.
- **The fluctuating or alternating stress** varies in a sinusoidal manner with respect to time. It has some mean value as well as amplitude value.
- It fluctuates between two limits—maximum and minimum stress.

Atmiya University Rajkot

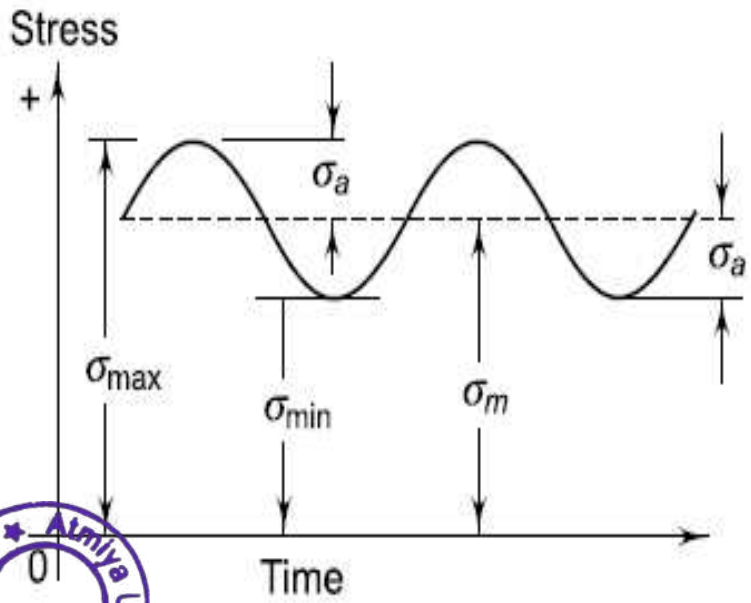

(a) Fluctuating stresses

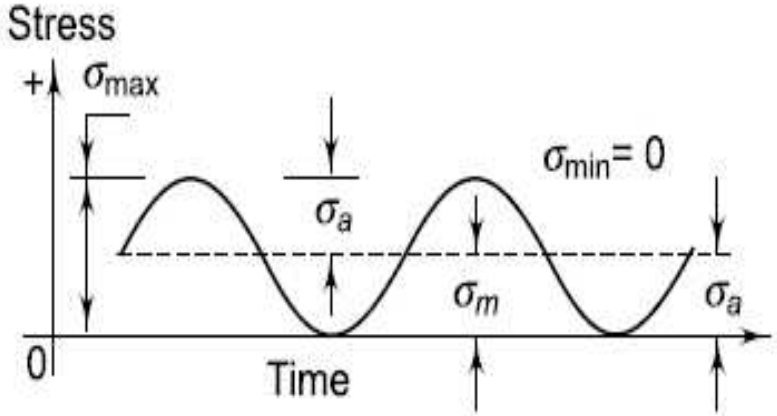

(b) Repeated stresses

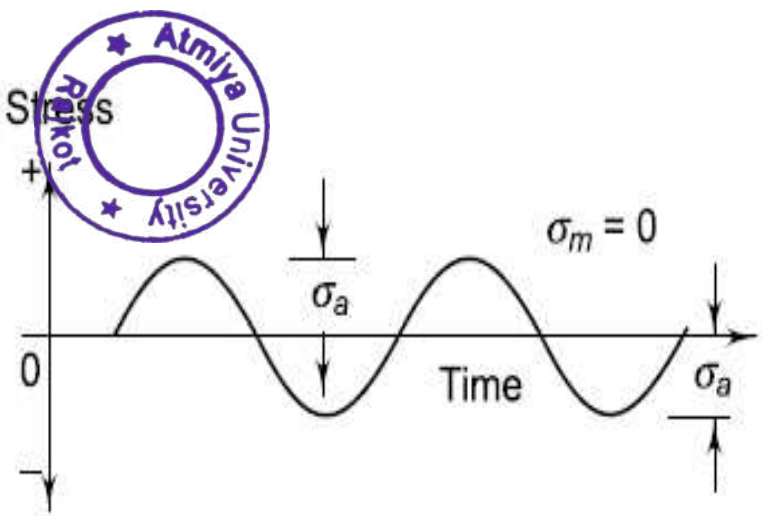

(c) Reversed stresses

Atmiya University Rajkot

- The stress can be tensile or compressive or partly tensile and partly compressive.
- The **repeated stress** varies in a sinusoidal manner with respect to time, but the variation is from zero to some maximum value.
- The minimum stress is zero in this case and therefore, amplitude stress and mean stress are equal.

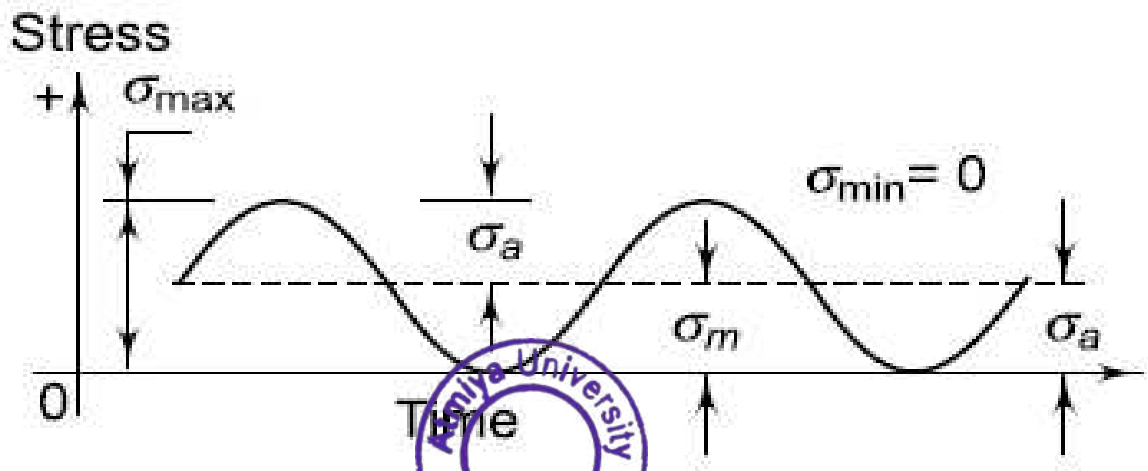

(b) Repeated stresses

Atmiya University Rajkot

- The **reversed stress** varies in a sinusoidal manner with respect to time, but it has **zero mean stress.**
- In this case, half portion of the cycle consists of tensile stress and the remaining half of compressive stress.
- There is a complete reversal from tension to compression between these two halves and therefore, the mean stress is zero.

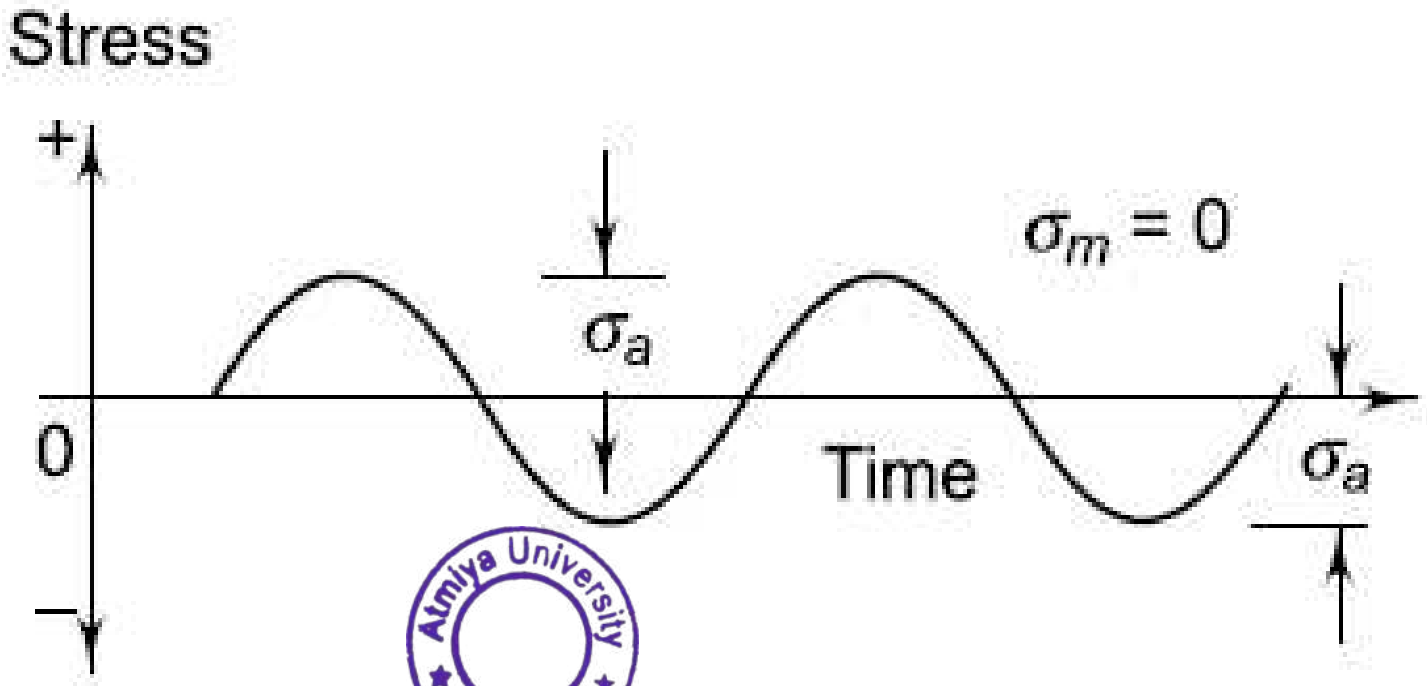

(c) Reversed stresses

Atmiya University Rajkot

It can be proved that,

$$\sigma_m = \frac{1}{2}(\sigma_{\max.} + \sigma_{\min})$$

$$\sigma_a = \frac{1}{2}(\sigma_{\max.} - \sigma_{\min.})$$

- ✓ In the analysis of fluctuating stresses, tensile stress is considered as positive, while compressive stress as negative.
- It can be observed that repeated stress and reversed stress are special cases of fluctuating stress with ($\sigma min. = 0$) *and* ($\sigma m = 0$) *respectively.*

Atmiya University Rajkot

FATIGUE FAILURE

- It has been observed that materials fail under fluctuating stresses at a stress magnitude which is lower than the ultimate tensile strength of the material.
- Sometimes, the magnitude is even lower than the yield strength.
- Further, it has been found that the magnitude of the stress causing fatigue failure decreases as the number of stress cycles increase.
- This phenomenon of decreased resistance of the materials to fluctuating stresses is the main characteristic of fatigue failure.

Atmiya University Rajkot

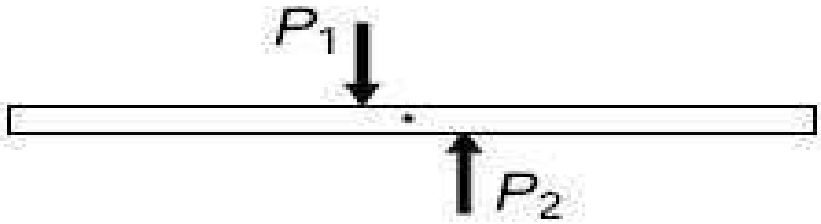

(a)

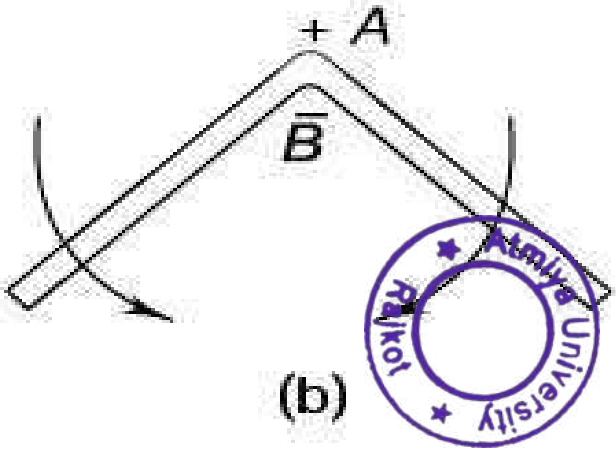

(b)

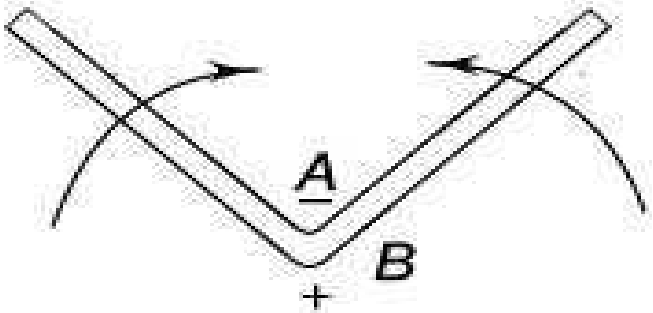

(c)

Shear and Fatigue Failure of Wire: (a) Shearing of Wire (b) Bending of Wire (c) Unbending of Wire

Atmiya University Rajkot

- There is a basic difference between failure due to static load and that due to fatigue.
- The failure due to static load is illustrated by the simple tension test.
- In this case, the load is gradually applied and there is sufficient time for the elongation of fibres.
- In ductile materials, there is considerable plastic fl ow prior to fracture.
- On the other hand, fatigue failure begins with a crack at some point in the material.
- The crack is more likely to occur in the following regions:

Atmiya University
Rajkot

(i) Regions of discontinuity, such as oil holes, keyways, screw threads, etc.

(ii) Regions of irregularities in machining operations, such as scratches on the surface, stamp mark, inspection marks, etc.

(iii) Internal cracks due to defects in materials like blow holes

- These regions are subjected to stress concentration due to the crack.
- The crack spreads due to fluctuating stresses, until the cross-section of the component is so reduced that the remaining portion is subjected to sudden fracture.

Atmiya University Rajkot

- In case of failure under static load, there is sufficient plastic deformation prior to failure, which gives a warning well in advance.
- On the other hand, fatigue cracks are not visible till they reach the surface of the component and by that time, the failure has already taken place.
- The fatigue failure is sudden and total.
- It is relatively easy to design a component for a static load.
- The fatigue failure, however, depends upon a number of factors, such as the number of cycles, mean stress, stress amplitude, stress concentration, residual stresses, corrosion and creep.
- This makes the design of components subjected to fluctuating stresses more complex.

Atmiya University Rajkot

ENDURANCE LIMIT

- The fatigue or endurance limit of a material is defined as the maximum amplitude of completely reversed stress that the standard specimen can sustain for an unlimited number of cycles without fatigue failure.
- Since the fatigue test cannot be conducted for unlimited or infinite number of cycles, 10^6 cycles is considered as a sufficient number of cycles to define the endurance limit.
- There is another term called fatigue life, which is frequently used with endurance limit.
- The fatigue life is defined as the number of stress cycles that the standard specimen can complete during the test before the appearance of the first fatigue crack.

Marwadi University Rajkot

- A schematic diagram of a rotating beam fatigue testing machine is shown in Fig.
- The specimen acts as a ‘rotating beam’ subjected to a bending moment.
- Therefore, it is subjected to a completely *Design against Fluctuating Load* reversed stress cycle.
- Changing the bending moment by addition or deletion of weights can vary the stress amplitude.
- The specimen is rotated by an electric motor. The number of revolutions before the appearance of the first fatigue crack is recorded on a revolution counter.
- In each test, two readings are taken, viz., stress amplitude (*Sf) and number of* stress cycles (*N).*

Atmiya University Rajkot

- These readings are used as two coordinates for plotting a point on the *S–N diagram.*
- This point is called *failure point.*
- To determine the endurance limit of a material, a number of tests are to be carried out.

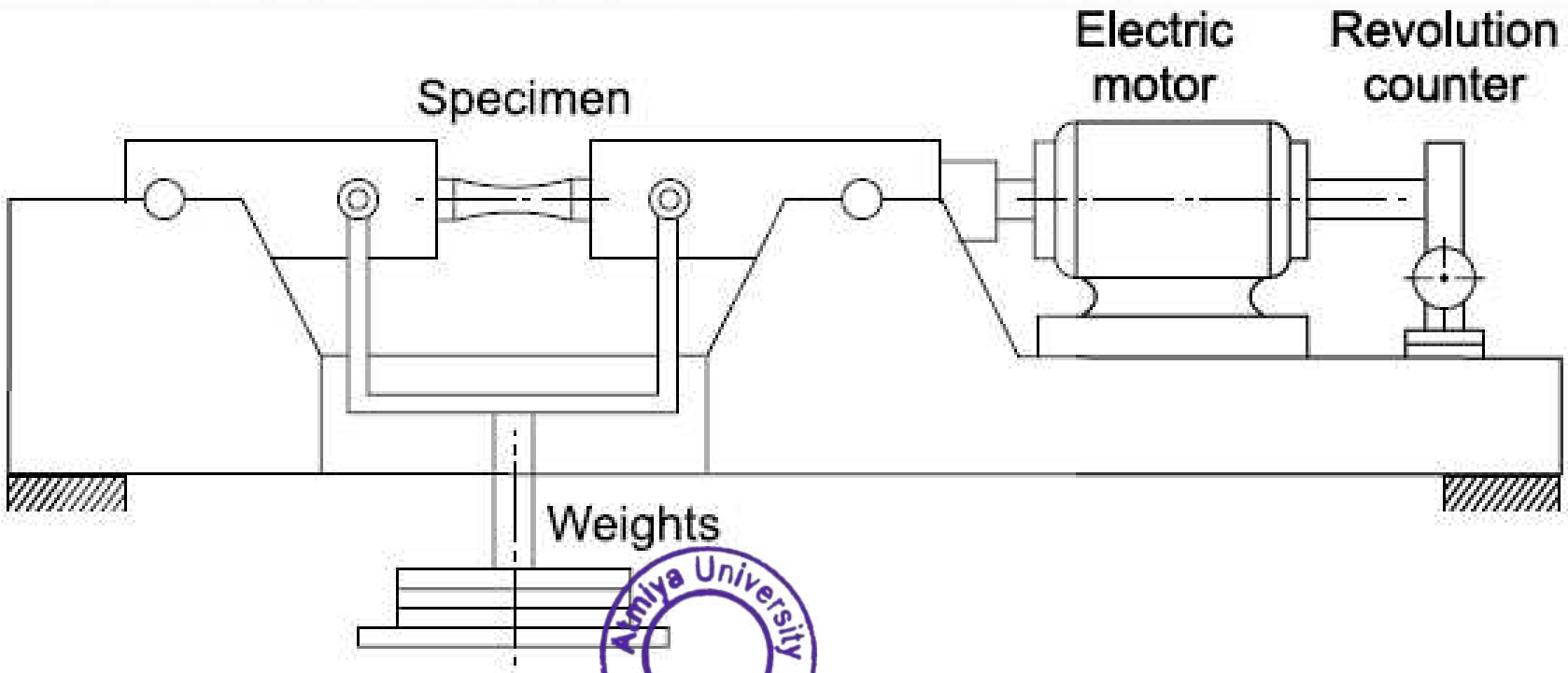

Rotating Beam Fatigue Testing Machine

Aamiya University Pakistan

- The results of these tests are plotted by means of an *S–N curve. The S–N curve is the graphical representation of stress amplitude (Sf) versus the number of stress cycles (N) before the fatigue failure on a log-log graph paper.*
- The *S–N curve for steels* is illustrated in Fig.
- The magnitude of this stress amplitude at 10^6 cycles represents the endurance limit of the material.

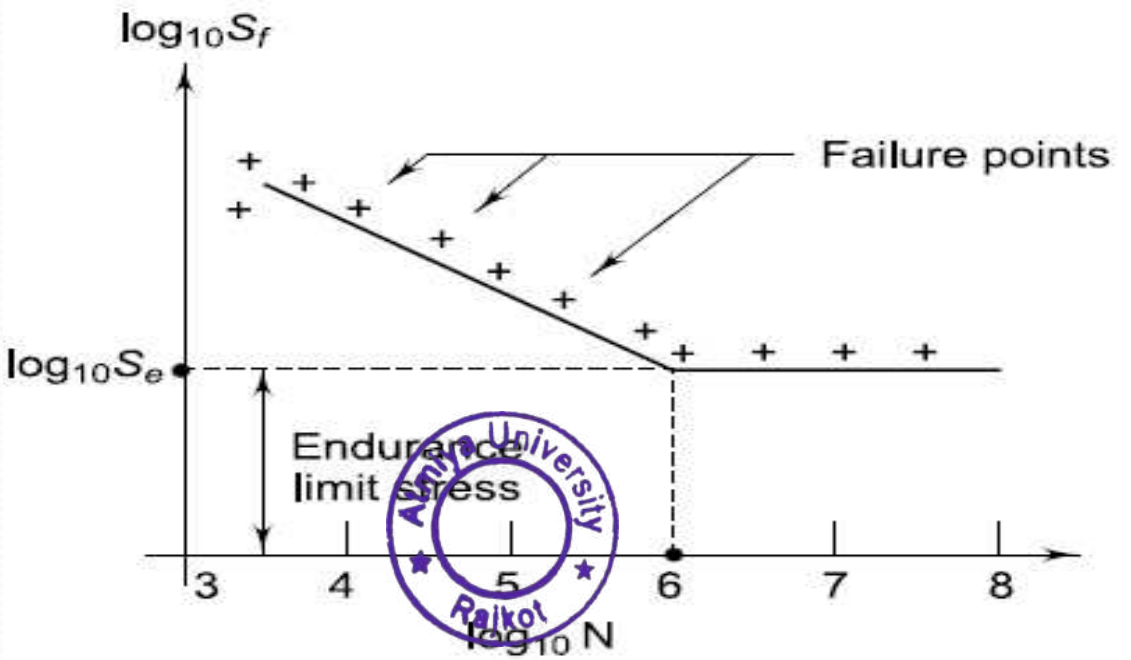

S-N Curve for Steels

Atmiya University Rajkot

- The endurance limit, in a true sense, is not exactly a property of material like ultimate tensile strength.
- It is affected by factors such as the size of the component, shape of component, the surface finish, temperature and the notch sensitivity of the material.
- Components subjected to high-cycle fatigue are designed on the basis of endurance limit stress.
- *S–N* curves, Soderberg lines, Gerber lines or Goodman diagrams are used in the design of such components.

Atmiya University
Rajkot

Atmiya University,Rajkot
Faculty of Engineering & Technology

Department of Mechanical Engineering

Prepared by: Shivang S. Jani

Course: Design of Machine Elements (21BTMECC304)

Unit I: Design against Static & Fluctuating Load

Eccentric Loading - Direct and Bending Stresses Combined

- An external load, whose line of action is parallel but does not coincide with the centroidal axis of the machine component, is known as an ***eccentric load.***
- ***The distance between the centroidal axis*** of the machine component and the eccentric load is called ***eccentricity and is generally denoted by e.***
- The examples of eccentric loading, from the subject point of view, are *C-clamps, punching machines,* brackets, offset connecting links etc.

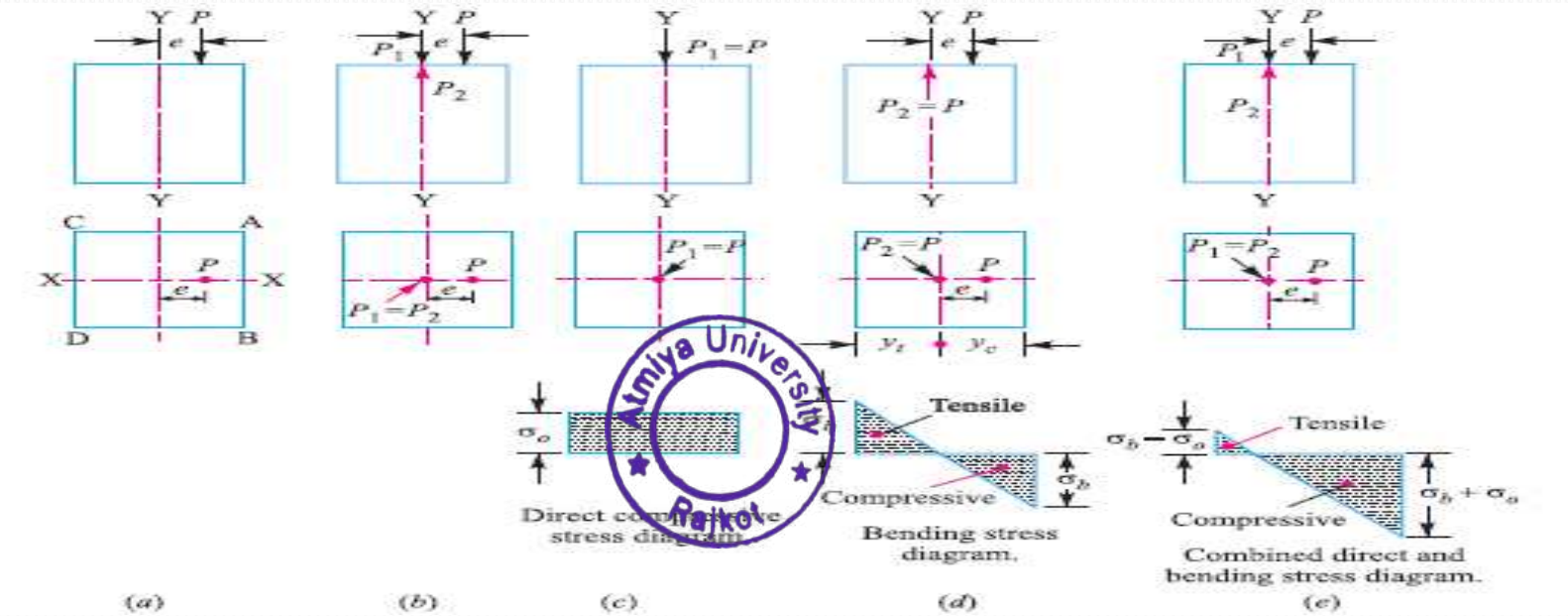

Atmiya University Rajkot

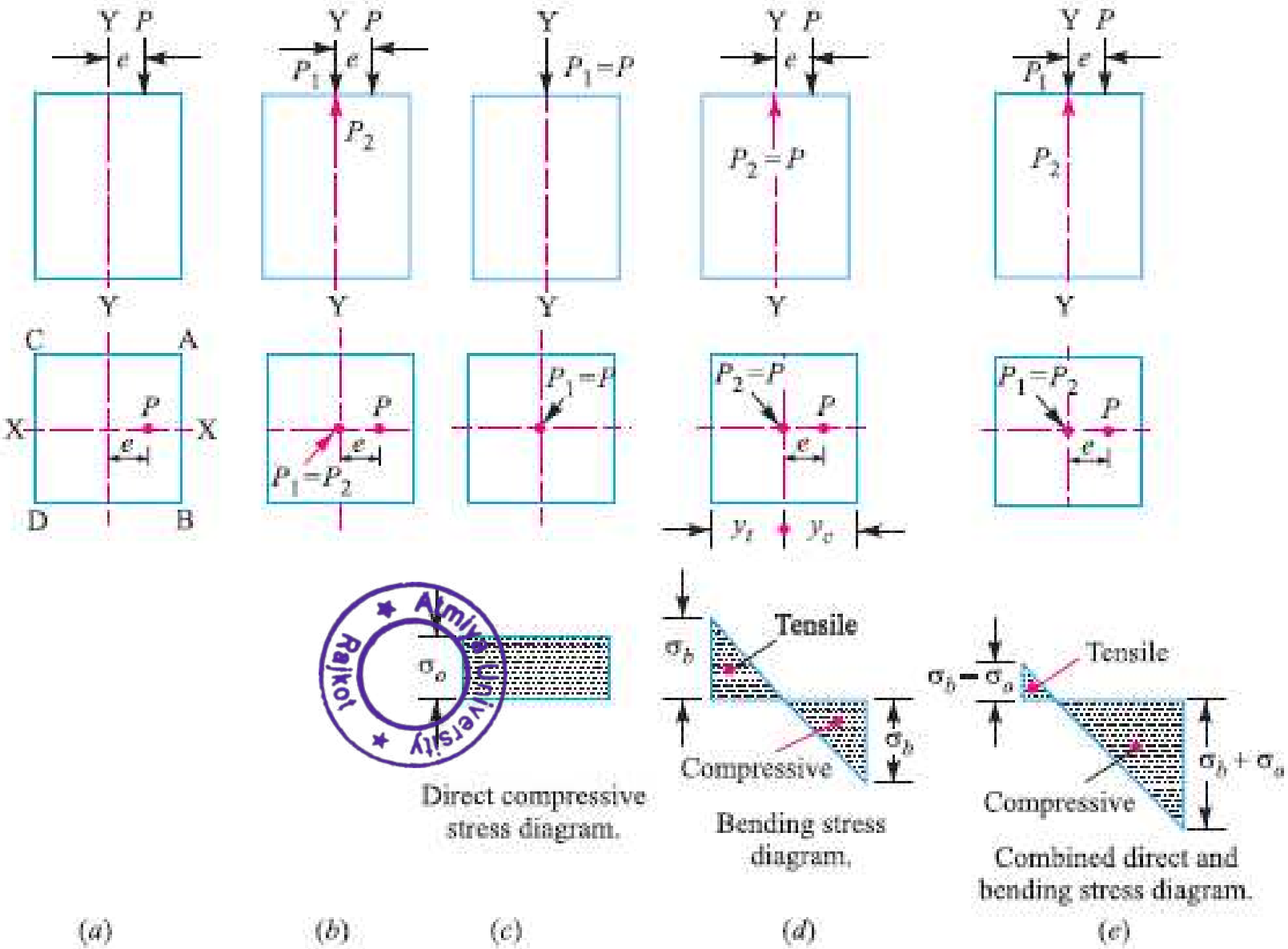

Atmiya University Rajkot

- Consider a short prismatic bar subjected to a compressive load P acting at an eccentricity of e as shown in Fig. (a).
- Let us introduce two forces P_1 and P_2 along the centre line or neutral axis equal in magnitude to P, without altering the equilibrium of the bar as shown in Fig. (b).
- A little consideration will show that the force P_1 will induce a direct compressive stress over the entire cross-section of the bar, as shown in Fig. (c).
- The magnitude of this direct compressive stress is given by,

$$\sigma_o = \frac{P_1}{A} \text{ or } \frac{P}{A},$$

- where A is the cross-sectional area of the bar.
- The forces P_1 and P_2 will form a couple equal to P × e which will cause bending stress.
- This bending stress is compressive at the edge AB and tensile at the edge CD, as shown in Fig.(d).

Atmiya University Rajkot

- The magnitude of bending stress at the edge *AB is given by,*

$$\sigma_b = \frac{P \cdot e \cdot y_c}{I} \text{ (compressive)}$$

- and bending stress at the edge *CD,*

$$\sigma_b = \frac{P \cdot e \cdot y_t}{I} \text{ (tensile)}$$

- Where, yc and yt = Distances of the extreme fibres on the compressive and tensile sides, from the neutral axis respectively, and
- I = Second moment of area of the section about the neutral axis i.e.Y-axis
- According to the principle of superposition, the maximum or the resultant compressive stress at the edge *AB,*

$$\sigma_c = \frac{P \cdot e \cdot y_c}{I} + \frac{P}{A} = \frac{M}{Z} + \frac{P}{A} = \sigma_b + \sigma_o$$

- The maximum or resultant tensile stress at the edge *CD,*

$$\sigma_t = \frac{P \cdot e \cdot y_t}{I} - \frac{P}{A} = \frac{M}{Z} - \frac{P}{A} = \sigma_b - \sigma_o$$

Atmiya University Rajkot

A rectangular strut is 150 mm wide and 120 mm thick. It carries a load of 180 kN at an eccentricity of 10 mm in a plane bisecting the thickness as shown in Fig. Find the maximum and minimum intensities of stress in the section.

Solution. Given : $b = 150$ mm ; $d = 120$ mm ; $P = 180$ kN $= 180 \times 10^3$ N ; $e = 10$ mm

We know that cross-sectional area of the strut,

$$A = b.d = 150 \times 120$$
$$= 18 \times 10^3 \text{ mm}^2$$

∴ Direct compressive stress,

$$\sigma_o = \frac{P}{A} = \frac{180 \times 10^3}{18 \times 10^3}$$
$$= 10 \text{ N/mm}^2 = 10 \text{ MPa}$$

Section modulus for the strut,

$$Z = \frac{I_{YY}}{y} = \frac{d \cdot b^3/12}{b/2} = \frac{d \cdot b^2}{6}$$
$$= \frac{120\,(150)^2}{6}$$
$$= 450 \times 10^3 \text{ mm}^3$$

Bending moment, $M = P.e = 180 \times 10^3 \times 10$
$$= 1.8 \times 10^6 \text{ N-mm}$$

∴ Bending stress, $\sigma_b = \frac{M}{Z} = \frac{1.8 \times 10^6}{450 \times 10^3}$
$$= 4 \text{ N/mm}^2 = 4 \text{ MPa}$$

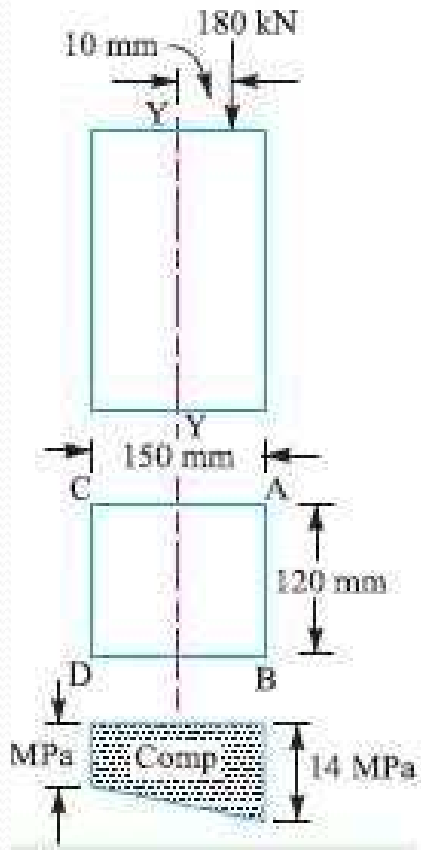

Saurashtra University Rajkot

- Since σ_o *is greater than* σ_b*, therefore the entire cross-section of the strut will be subjected to* compressive stress. The maximum intensity of compressive stress will be at the edge *AB and* minimum at the edge *CD.*
- *Maximum intensity of compressive stress at the edge AB*

  $= \sigma_o + \sigma_b = 10 + 4 = 14$ *MPa* ***Ans.***
- *Minimum intensity of compressive stress at the edge CD*

  $= \sigma_o - \sigma_b = 10 - 4 = 6$ *MPa* ***Ans***

Atmiya University Rajkot

A hollow circular column of external diameter 250 mm and internal diameter 200 mm, carries a projecting bracket on which a load of 20 kN rests, as shown in Fig. The centre of the load from the centre of the column is 500 mm. Find the stresses at the sides of the column.

Solution. Given : $D = 250$ mm ; $d = 200$ mm ;
$P = 20$ kN $= 20 \times 10^3$ N ; $e = 500$ mm

We know that cross-sectional area of column,

$$A = \frac{\pi}{4}(D^2 - d^2)$$

$$= \frac{\pi}{4}[(250)^2 - (200)^2]$$

$$= 17\,674 \text{ mm}^2$$

∴ Direct compressive stress,

$$\sigma_o = \frac{P}{A} = \frac{20 \times 10^3}{17\,674} = 1.13 \text{ N/mm}^2$$

$$= 1.13 \text{ MPa}$$

Section modulus for the column,

$$Z = \frac{I}{y} = \frac{\frac{\pi}{64}[D^4 - d^4]}{D/2} = \frac{\frac{\pi}{64}[(250)^4 - (200)^4]}{250/2}$$

$$= 905.8 \times 10^3 \text{ mm}^3$$

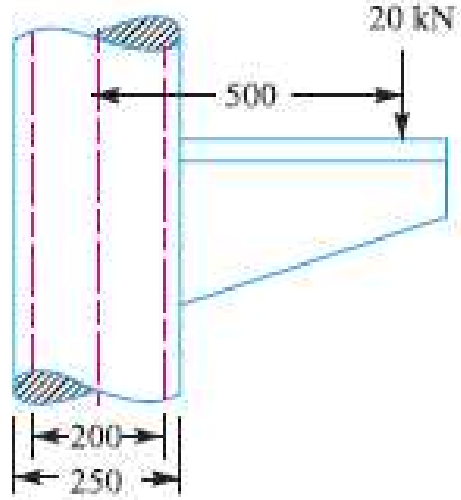

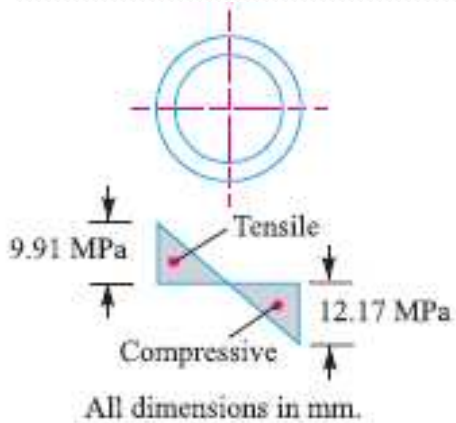

Atmiya University Rajkot

Bending moment,

$$M = Pe$$
$$= 20 \times 10^3 \times 500$$
$$= 10 \times 10^6 \text{ N-mm}$$

∴ Bending stress,

$$\sigma_b = \frac{M}{Z} = \frac{10 \times 10^6}{905.8 \times 10^3}$$
$$= 11.04 \text{ N/mm}^2$$
$$= 11.04 \text{ MPa}$$

Since σ_o is less than σ_b, therefore right hand side of the column will be subjected to compressive stress and the left hand side of the column will be subjected to tensile stress.

∴ Maximum compressive stress,

$$\sigma_c = \sigma_b + \sigma_o = 11.04 + 1.13$$
$$= 12.17 \text{ MPa}$$ Ans.

Maximum tensile stress,

$\sigma_t = \sigma_b - \sigma_o = 11.04 - 1.13 = 9.91$ *MPa* ***Ans.***

Atmiya University Rajkot

Atmiya University,Rajkot
Faculty of Engineering & Technology

Department of Mechanical Engineering

Prepared by: Shivang S. Jani

Course: Design of Machine Elements (21BTMECC304)

Module: Design against Static & Fluctuating Load

Principal Stresses and Principal Planes

- For a given state of stress at a point, the magnitude of normal stress and shear stress may vary with respect to the inclination of planes.
- If we are concerned with the safety of solids under stress, we are required to find on which planes extreme values of normal and shear stress components are present. Hence, it is essential to know :

(1)Maximum tensile stress,

(2) Maximum compressive stress, and

(3) Maximum shear stress.

- In addition, we may also require to know the planes on which these values occur.

Atmiya University Rajkot

- The extreme values of normal stresses are called the Principal Stresses and the planes on which the principal stresses act are called the principal planes.
- In two dimensional problems, there are two principal stresses, namely the major principal stress and the minor principal stress which are defined as the maximum and minimum values of the normal stresses respectively.
- normal stresses respectively. Here, the maximum or minimum is to be considered algebraically. For example, if the principal stresses happen to be 20 N/mm^2 tensile and 75 N/mm^2 compressive, the tensile stress of 20 N/mm^2 is to be taken as the major principal stress denoted by the symbol σ_1 and the compressive stress of 75 N/mm^2 is to be taken as the minor principal stress (algebraically –75 N/mm^2) and denoted by the symbol σ_2 . The corresponding planes are defined as major and minor principal planes.

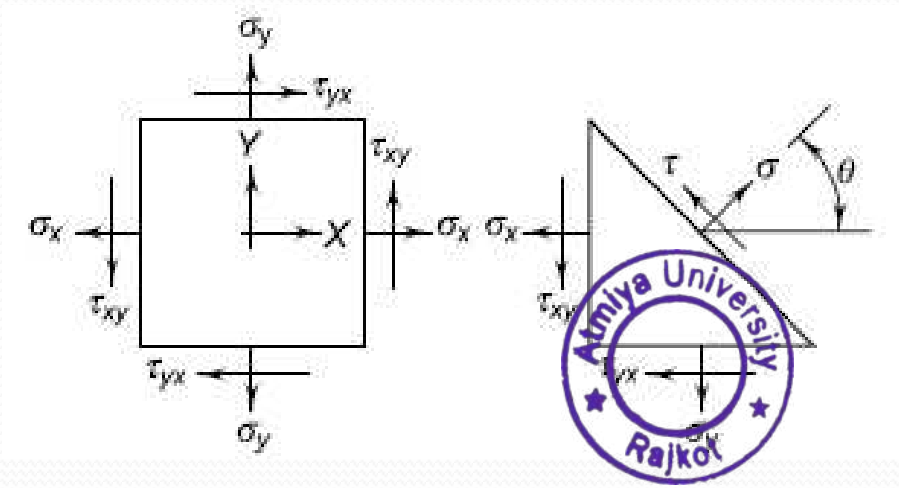

Atmiya University Rajkot

In previous articles and examples, mechanical components, which are subjected to only one type of load, are considered. There are many components, which are subjected to several types of load simultaneously. A transmission shaft is subjected to bending as well as torsional moment at the same time. In design, it is necessary to determine the state of stresses under these conditions. An element of a plate subjected to two-dimensional stresses is shown is Fig. 4.30(a). In this analysis, the stresses are classified into two groups—normal stresses and shear stresses. The *normal stress* is perpendicular to the area under consideration, while the *shear stress* acts over the area.

There is a particular system of notation for these stresses. The normal stresses are denoted by σ_x, σ_y and σ_z in the X, Y and Z directions respectively. Tensile stresses are considered to be positive, while compressive stresses as negative. The shear stresses are denoted by two subscripts, viz. τ_{xy} or τ_{yz}, as shown in Fig. 4.30(a). The first subscript denotes the area over which it acts and the second indicates the direction of shear force. As an example, consider the shear stress denoted by τ_{xy}. The subscript x indicates that the shear stress is acting on the area, which is perpendicular to the X-axis. The subscript y indicates that the shear stress is acting in the Y-direction. The shear stresses are positive if they act in the positive direction of the reference axis. It can be proved that,

$$\tau_{xy} = \tau_{yx} \tag{4.27}$$

Atmiya University Rajkot

Theories of Failure Under Static Load

- Strength of machine members is based upon the mechanical properties of the materials used.
- Since these properties are usually determined from simple tension or compression tests, therefore, predicting failure in members subjected to uniaxial stress is both simple and straight-forward.
- But the problem of predicting the failure stresses for members subjected to bi-axial or tri-axial stresses is much more complicated.
- The problem is so complicated that a large number of different theories have been formulated.
- The principal theories of failure for a member subjected to bi-axial stress are as follows:

Atmiya University Rajkot

1. Maximum principal (or normal) stress theory (also known as Rankine's theory).
2. Maximum shear stress theory (also known as Guest's or Tresca's theory).
3. Maximum principal (or normal) strain theory (also known as Saint Venant theory).
4. Maximum strain energy theory (also known as Haigh's theory).
5. Maximum distortion energy theory (also known as Hencky and Von Mises theory).

Atmiya University Rajkot

- Since ductile materials usually fail by yielding i.e. when permanent deformations occur in the material and brittle materials fail by fracture, therefore the limiting strength for these two classes of materials is normally measured by different mechanical properties.
- For ductile materials, the limiting strength is the stress at yield point as determined from simple tension test and it is, assumed to be equal in tension or compression.
- For brittle materials, the limiting strength is the ultimate stress in tension or compression.

Atmiya University Rajkot

Maximum Principal or Normal Stress Theory (Rankine's Theory)

- According to this theory, the failure or yielding occurs at a point in a member when the maximum principal or normal stress in a bi-axial stress system reaches the limiting strength of the material in a simple tension test.
- Since the limiting strength for ductile materials is yield point stress and for brittle materials (which do not have well defined yield point) the limiting strength is ultimate stress, therefore according to the above theory, taking factor of safety (F.S.) into consideration, the maximum principal or normal stress (σt_1) in a bi-axial stress system is given by

Atmiya University Rajkot

$$\sigma_{t1} = \frac{\sigma_{yt}}{F.S.}, \text{ for ductile materials}$$

$$= \frac{\sigma_u}{F.S.}, \text{ for brittle materials}$$

where σ_{yt} = Yield point stress in tension as determined from simple tension test, and

σ_u = Ultimate stress.

- Since the maximum principal or normal stress theory is based on failure in tension or compression and ignores the possibility of failure due to shearing stress, therefore it is not used for ductile materials.
- However, for brittle materials which are relatively strong in shear but weak in tension or compression, this theory is generally used.

Atmiya University Rajkot

Maximum Shear Stress Theory (Guest's or Tresca's Theory)

According to this theory, the failure or yielding occurs at a point in a member when the maximum shear stress in a bi-axial stress system reaches a value equal to the shear stress at yield point in a simple tension test. Mathematically,

$$\tau_{max} = \tau_{yt}/F.S. \qquad ...(i)$$

where τ_{max} = Maximum shear stress in a bi-axial stress system,

τ_{yt} = Shear stress at yield point as determined from simple tension test, and

$F.S.$ = Factor of safety.

Since the shear stress at yield point in a simple tension test is equal to one-half the yield stress in tension, therefore the equation (i) may be written as

$$\tau_{max} = \frac{\sigma_{yt}}{2 \times F.S.}$$

This theory is mostly used for designing members of ductile materials.

Amiya University Rajkot

Maximum Principal Strain Theory (Saint Venant's Theory)

According to this theory, the failure or yielding occurs at a point in a member when the maximum principal (or normal) strain in a bi-axial stress system reaches the limiting value of strain (*i.e.* strain at yield point) as determined from a simple tensile test. The maximum principal (or normal) strain in a bi-axial stress system is given by

$$\varepsilon_{max} = \frac{\sigma_{t1}}{E} - \frac{\sigma_{t2}}{m \cdot E}$$

∴ According to the above theory,

$$\varepsilon_{max} = \frac{\sigma_{t1}}{E} - \frac{\sigma_{t2}}{m \cdot E} = \varepsilon = \frac{\sigma_{yt}}{E \times F.S.} \quad \ldots(i)$$

where σ_{t1} and σ_{t2} = Maximum and minimum principal stresses in a bi-axial stress system,

ε = Strain at yield point as determined from simple tension test,

$1/m$ = Poisson's ratio,

E = Young's modulus, and

$F.S.$ = Factor of safety.

From equation (*i*), we may write th

$$\sigma_{t1} - \frac{\sigma_{t2}}{m} = \frac{\sigma_{yt}}{F.S.}$$

Atmiya University Rajkot

This theory is not used, in general, because it only gives reliable results in particular cases.

Maximum Strain Energy Theory (Haigh's Theory)

According to this theory, the failure or yielding occurs at a point in a member when the strain energy per unit volume in a bi-axial stress system reaches the limiting strain energy (*i.e.* strain energy at the yield point) per unit volume as determined from simple tension test.

We know that strain energy per unit volume in a bi-axial stress system,

$$U_1 = \frac{1}{2E}\left[(\sigma_{t1})^2 + (\sigma_{t2})^2 - \frac{2\,\sigma_{t1}\times\sigma_{t2}}{m}\right]$$

and limiting strain energy per unit volume for yielding as determined from simple tension test,

$$U_2 = \frac{1}{2E}\left(\frac{\sigma_{yt}}{F.S.}\right)^2$$

According to the above theory, $U_1 = U_2$.

$$\therefore \quad \frac{1}{2E}\left[(\sigma_{t1})^2 + (\sigma_{t2})^2 - \frac{2\,\sigma_{t1}\times\sigma_{t2}}{m}\right] = \frac{1}{2E}\left(\frac{\sigma_{yt}}{F.S.}\right)^2$$

or

$$(\sigma_{t1})^2 + (\sigma_{t2})^2 - \frac{2\,\sigma_{t1}\times\sigma_{t2}}{m} = \left(\frac{\sigma_{yt}}{F.S.}\right)^2$$

This theory may be used for ductile materials.

Atmiya University Rajkot

Maximum Distortion Energy Theory (Hencky and Von Mises Theory)

According to this theory, the failure or yielding occurs at a point in a member when the distortion strain energy (also called shear strain energy) per unit volume in a bi-axial stress system reaches the limiting distortion energy (*i.e.* distortion energy at yield point) per unit volume as determined from a simple tension test. Mathematically, the maximum distortion energy theory for yielding is expressed as

$$(\sigma_{t1})^2 + (\sigma_{t2})^2 - 2\sigma_{t1} \times \sigma_{t2} = \left(\frac{\sigma_{yt}}{F.S.}\right)^2$$

This theory is mostly used for ductile materials in place of maximum strain energy theory.

Atmiya University Rajkot

The load on a bolt consists of an axial pull of 10 kN together with a transverse shear force of 5 kN. Find the diameter of bolt required according to 1. Maximum principal stress theory; 2. Maximum shear stress theory; 3. Maximum principal strain theory; 4. Maximum strain energy theory; and 5. Maximum distortion energy theory. Take permissible tensile stress at elastic limit = 100 MPa and poisson's ratio = 0.3.

Solution. Given : $P_{t1} = 10$ kN ; $P_s = 5$ kN ; $\sigma_{t(el)} = 100$ MPa $= 100$ N/mm^2 ; $1/m = 0.3$

Let d = Diameter of the bolt in mm.

∴ Cross-sectional area of the bolt,

$$A = \frac{\pi}{4} \times d^2 = 0.7854\, d^2 \text{ mm}^2$$

We know that axial tensile stress,

$$\sigma_1 = \frac{P_{t1}}{A} = \frac{10}{0.7854\, d^2} = \frac{12.73}{d^2} \text{ kN/mm}^2$$

and transverse shear stress,

$$\tau = \frac{P_s}{A} = \frac{5}{0.7854\, d^2} = \frac{6.365}{d^2} \text{ kN/mm}^2$$

Atmiya University Rajkot

1. *According to maximum principal stress theory*

We know that maximum principal stress,

$$\sigma_{t1} = \frac{\sigma_1 + \sigma_2}{2} + \frac{1}{2}\left[\sqrt{(\sigma_1 - \sigma_2)^2 + 4\,\tau^2}\right]$$

$$= \frac{\sigma_1}{2} + \frac{1}{2}\left[\sqrt{(\sigma_1)^2 + 4\,\tau^2}\right] \qquad ...(\because \sigma_2 = 0)$$

$$= \frac{12.73}{2\,d^2} + \frac{1}{2}\left[\sqrt{\left(\frac{12.73}{d^2}\right)^2 + 4\left(\frac{6.365}{d^2}\right)^2}\right]$$

$$= \frac{6.365}{d^2} + \frac{1}{2} \times \frac{6.365}{d^2}\left[\sqrt{4+4}\right]$$

$$= \frac{6.365}{d^2}\left[1 + \frac{1}{2}\sqrt{4+4}\right] = \frac{15.365}{d^2}\ \text{kN/mm}^2 = \frac{15\,365}{d^2}\ \text{N/mm}^2$$

According to maximum principal stress theory,

$$\sigma_{t1} = \sigma_{t(el)} \quad \text{or} \quad \frac{15\,365}{d^2} = 100$$

$\therefore$ $d^2 = 15\,365/100 = 153.65$ or $d = 12.4$ mm **Ans.**

Atmiya University Rajkot
Atmiya University Rajkot

2. *According to maximum shear stress theory*

We know that maximum shear stress,

$$\tau_{max} = \frac{1}{2}\left[\sqrt{(\sigma_1 - \sigma_2)^2 + 4\,\tau^2}\right] = \frac{1}{2}\left[\sqrt{(\sigma_1)^2 + 4\,\tau^2}\right] \qquad ...(\because \sigma_2 = 0)$$

$$= \frac{1}{2}\left[\sqrt{\left(\frac{12.73}{d^2}\right)^2 + 4\left(\frac{6.365}{d^2}\right)^2}\right] = \frac{1}{2} \times \frac{6.365}{d^2}\left[\sqrt{4+4}\right]$$

$$= \frac{9}{d^2}\ \text{kN/mm}^2 = \frac{9000}{d^2}\ \text{N/mm}^2$$

Atmiya University Rajkot

According to maximum shear stress theory,

$$\tau_{max} = \frac{\sigma_{t(el)}}{2} \quad \text{or} \quad \frac{9000}{d^2} = \frac{100}{2} = 50$$

$$\therefore \qquad d^2 = 9000 / 50 = 180 \quad \text{or} \quad d = 13.42\ \text{mm}$$ **Ans.**

Atmiya University Rajkot

3. *According to maximum principal strain theory*

We know that maximum principal stress,

$$\sigma_{t1} = \frac{\sigma_1}{2} + \frac{1}{2}\left[\sqrt{(\sigma_1)^2 + 4\,\tau^2}\right] = \frac{15\ 365}{d^2}$$

and minimum principal stress,

$$\sigma_{t2} = \frac{\sigma_1}{2} - \frac{1}{2}\left[\sqrt{(\sigma_1)^2 + 4\,\tau^2}\right]$$

$$= \frac{12.73}{2\,d^2} - \frac{1}{2}\left[\sqrt{\left(\frac{12.73}{d^2}\right)^2 + 4\left(\frac{6.365}{d^2}\right)^2}\right]$$

$$= \frac{6.365}{d^2} - \frac{1}{2} \times \frac{6.365}{d^2}\left[\sqrt{4+4}\right]$$

$$= \frac{6.365}{d^2}\left[1 - \sqrt{2}\right] = \frac{-2.635}{d^2}\ \text{kN/mm}^2$$

$$= \frac{-2635}{d^2}\ \text{N/mm}^2$$

We know that according to maximum principal strain theory,

$$\frac{\sigma_{t1}}{E} - \frac{\sigma_{t2}}{mE} = \frac{\sigma_{t(el)}}{E} \quad \text{or} \quad \sigma_{t1} - \frac{\sigma_{t2}}{m} = \sigma_{t(el)}$$

$$\therefore \quad \frac{15\ 365}{d^2} + \frac{2635 \times 10^3}{d^2} = 100 \quad \text{or} \quad \frac{16\ 156}{d^2} = 100$$

$d^2 = 16\ 156 / 100 = 161.56$ or $d = 12.7$ mm **Ans.**

Atmiya University Rajkot

4. *According to maximum strain energy theory*

We know that according to maximum strain energy theory,

$$(\sigma_{t1})^2 + (\sigma_{t2})^2 - \frac{2\,\sigma_{t1} \times \sigma_{t2}}{m} = [\sigma_{t(el)}]^2$$

$$\left[\frac{15\,365}{d^2}\right]^2 + \left[\frac{-2635}{d^2}\right]^2 - 2 \times \frac{15\,365}{d^2} \times \frac{-2635}{d^2} \times 0.3 = (100)^2$$

$$\frac{236 \times 10^6}{d^4} + \frac{6.94 \times 10^6}{d^4} + \frac{24.3 \times 10^6}{d^4} = 10 \times 10^3$$

$$\frac{23\,600}{d^4} + \frac{694}{d^4} + \frac{2430}{d^4} = 1 \quad \text{or} \quad \frac{26\,724}{d^4} = 1$$

$\therefore$ $d^4 = 26\,724$ or $d = 12.78$ mm **Ans.**

Atmiya University Rajkot

5. *According to maximum distortion energy theory*

According to maximum distortion energy theory,

$$(\sigma_{t1})^2 + (\sigma_{t2})^2 - 2\sigma_{t1} \times \sigma_{t2} = [\sigma_{t(el)}]^2$$

$$\left[\frac{15\,365}{d^2}\right]^2 + \left[\frac{-2635}{d^2}\right]^2 - 2 \times \frac{15\,365}{d^2} \times \frac{-2635}{d^2} = (100)^2$$

$$\frac{236 \times 10^6}{d^4} + \frac{6.94 \times 10^6}{d^4} + \frac{80.97 \times 10^6}{d^4} = 10 \times 10^3$$

$$\frac{23\,600}{d^4} + \frac{694}{d^4} + \frac{8097}{d^4} = 1 \quad \text{or} \quad \frac{32\,391}{d^4} = 1$$

$\therefore$ $d^4 = 32\,391$ or $d = 13.4$ mm **Ans.**

Atmiya University Rajkot

A cylindrical shaft made of steel of yield strength 700 MPa is subjected to static loads consisting of bending moment 10 kN-m and a torsional moment 30 kN-m. Determine the diameter of the shaft using two different theories of failure, and assuming a factor of safety of 2. Take E = 210 GPa and poisson's ratio = 0.25.

Solution. Given : $\sigma_{yt} = 700$ MPa $= 700$ N/mm^2 ; $M = 10$ kN-m $= 10 \times 10^6$ N-mm ; $T = 30$ kN-m $= 30 \times 10^6$ N-mm ; $F.S. = 2$; $E = 210$ GPa $= 210 \times 10^3$ N/mm^2 ; $1/m = 0.25$

Let d = Diameter of the shaft in mm.

First of all, let us find the maximum and minimum principal stresses.

We know that section modulus of the shaft

$$Z = \frac{\pi}{32} \times d^3 = 0.0982\, d^3 \text{ mm}^3$$

∴ Bending (tensile) stress due to the bending moment,

$$\sigma_1 = \frac{M}{Z} = \frac{10 \times 10^6}{0.0982\, d^3} = \frac{101.8 \times 10^6}{d^3} \text{ N/mm}^2$$

and shear stress due to torsional moment,

$$\tau = \frac{16\, T}{\pi\, d^3} = \frac{16 \times 30 \times 10^6}{\pi\, d^3} = \frac{152.8 \times 10^6}{d^3} \text{ N/mm}^2$$

Atmiya University Rajkot

We know that maximum principal stress,

$$\sigma_{t1} = \frac{\sigma_1 + \sigma_2}{2} + \frac{1}{2}\left[\sqrt{(\sigma_1 - \sigma_2)^2 + 4\,\tau^2}\right]$$

$$= \frac{\sigma_1}{2} + \frac{1}{2}\left[\sqrt{(\sigma_1)^2 + 4\,\tau^2}\right] \qquad ...(\because \sigma_2 = 0)$$

$$= \frac{101.8 \times 10^6}{2d^3} + \frac{1}{2}\left[\sqrt{\left(\frac{101.8 \times 10^6}{d^3}\right)^2 + 4\left(\frac{152.8 \times 10^6}{d^3}\right)^2}\right]$$

$$= \frac{50.9 \times 10^6}{d^3} + \frac{1}{2} \times \frac{10^6}{d^3}\left[\sqrt{(101.8)^2 + 4\,(152.8)^2}\right]$$

$$= \frac{50.9 \times 10^6}{d^3} + \frac{161 \times 10^6}{d^3} = \frac{211.9 \times 10^6}{d^3}\ \text{N/mm}^2$$

and minimum principal stress,

$$\sigma_{t2} = \frac{\sigma_1 + \sigma_2}{2} - \frac{1}{2}\left[\sqrt{(\sigma_1 - \sigma_2)^2 + 4\,\tau^2}\right]$$

$$= \frac{\sigma_1}{2} - \frac{1}{2}\left[\sqrt{(\sigma_1)^2 + 4\,\tau^2}\right] \qquad ...(\because \sigma_2 = 0)$$

$$= \frac{50.9 \times 10^6}{d^3} - \frac{161 \times 10^6}{d^3} = \frac{-110.1 \times 10^6}{d^3}\ \text{N/mm}^2$$

Let us now find out the diameter of shaft (d) by considering the maximum shear stress theory and maximum strain energy theory.

Atmiya University Rajkot

1. *According to maximum shear stress theory*

We know that maximum shear stress,

$$\tau_{max} = \frac{\sigma_{t1} - \sigma_{t2}}{2} = \frac{1}{2}\left[\frac{211.9 \times 10^6}{d^3} + \frac{110.1 \times 10^6}{d^3}\right] = \frac{161 \times 10^6}{d^3}$$

We also know that according to maximum shear stress theory,

$$\tau_{max} = \frac{\sigma_{yt}}{2\ F.S.} \quad \text{or} \quad \frac{161 \times 10^6}{d^3} = \frac{700}{2 \times 2} = 175$$

$\therefore$ $d^3 = 161 \times 10^6 / 175 = 920 \times 10^3$ or $d = 97.2$ mm **Ans.**

$$\tau_{max} = \tfrac{1}{2}\left[\sqrt{(\sigma_1)^2 + 4\,\tau^2}\right]$$

$$= \frac{1}{2}\left[\sqrt{\left(\frac{101.8 \times 10^6}{d^3}\right)^2 + 4\left(\frac{152.8 \times 10^6}{d^3}\right)^2}\right]$$

$$= \frac{1}{2} \times \frac{10^6}{d^3}\left[\sqrt{(101.8)^2 + 4\,(152.8)^2}\right]$$

$$= \frac{1}{2} \times \frac{10^6}{d^3} \times 322 = \frac{161 \times 10^6}{d^3}\ \text{N/mm}^2$$

Atmiya University Rajkot
Atmiya University Rajkot

2. *According to maximum strain energy theory*

We know that according to maximum strain energy theory,

$$\frac{1}{2E}\left[(\sigma_{t1})^2 + (\sigma_{t2})^2 - \frac{2\,\sigma_{t1}\times\sigma_{t2}}{m}\right] = \frac{1}{2E}\left(\frac{\sigma_{yt}}{F.S.}\right)^2$$

or

$$(\sigma_{t1})^2 + (\sigma_{t2})^2 - \frac{2\,\sigma_{t1}\times\sigma_{t2}}{m} = \left(\frac{\sigma_{yt}}{F.S.}\right)^2$$

$$\left[\frac{211.9\times10^6}{d^3}\right]^2 + \left[\frac{-110.1\times10^6}{d^3}\right]^2 - 2\times\frac{211.9\times10^6}{d^3}\times\frac{-110.1\times10^6}{d^3}\times0.25 = \left(\frac{700}{2}\right)^2$$

or

$$\frac{44\,902\times10^{12}}{d^6} + \frac{12\,122\times10^{12}}{d^6} + \frac{11\,665\times10^{12}}{d^6} = 122\,500$$

$$\frac{68\,689\times10^{12}}{d^6} = 122\,500$$

$\therefore$ $d^6 = 68\,689\times10^{12}/122\,500 = 0.5607\times10^{12}$ or $d = 90.8$ mm **Ans.**

Atmiya University Rajkot
Atmiya University Rajkot

MACHINE DESIGN

MODULE-5
COUPLINGS

Atmiya University
Rajkot

COUPLING

- A coupling is defined as a mechanical device that permanently joins two rotating shafts to each other.
- Example: Driver & driven shaft of pump.

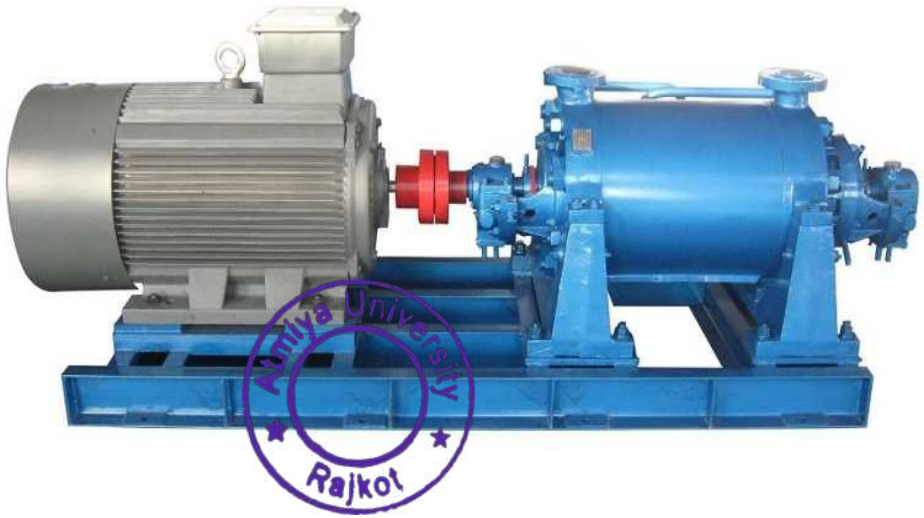

Difference between coupling & clutch

- Coupling is a permanent connection where as clutch can diconnect and connect as and when required.

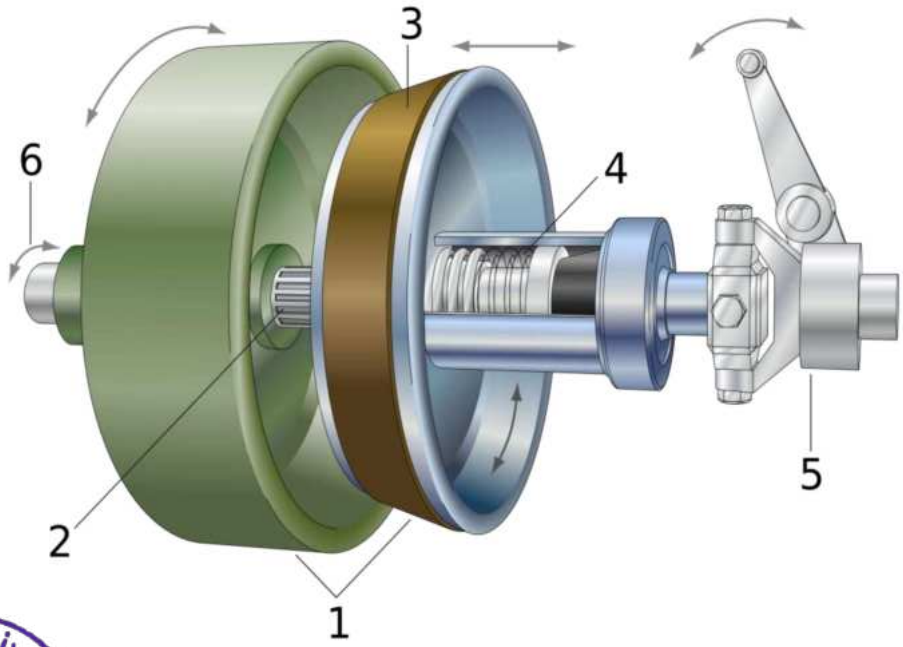

Atmiya University
Rajkot

Types of coulpings

1. Oldham coupling:

- Used for two parallel shafts with smaller distance between their axes

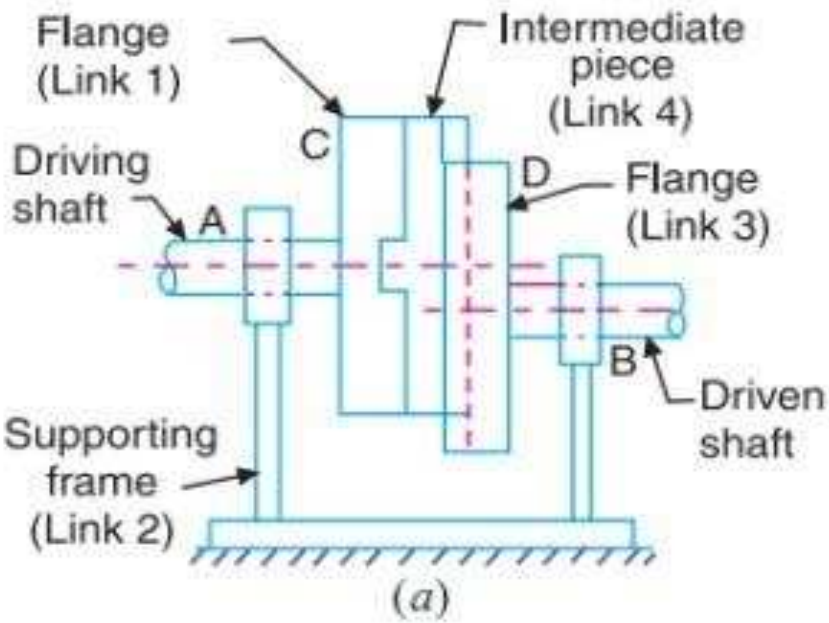

2. Hookes Coupling= Universal coupling:

- Used when two shafts having intersecting axes

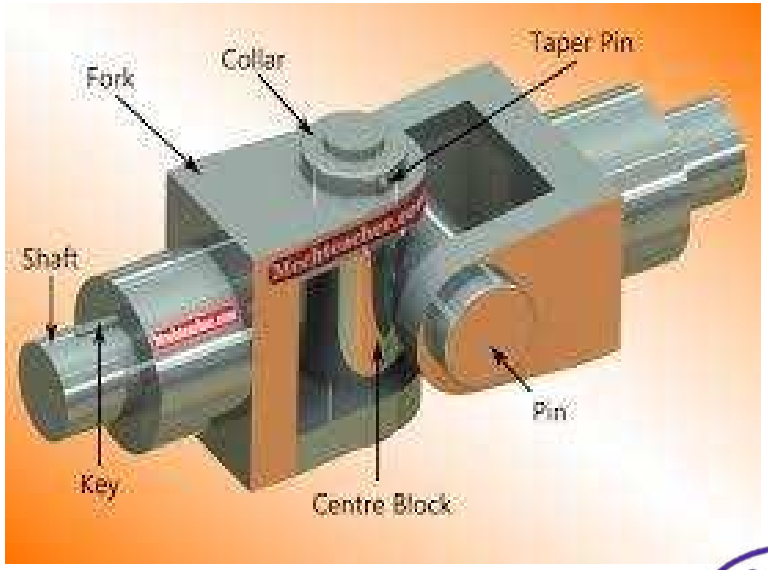

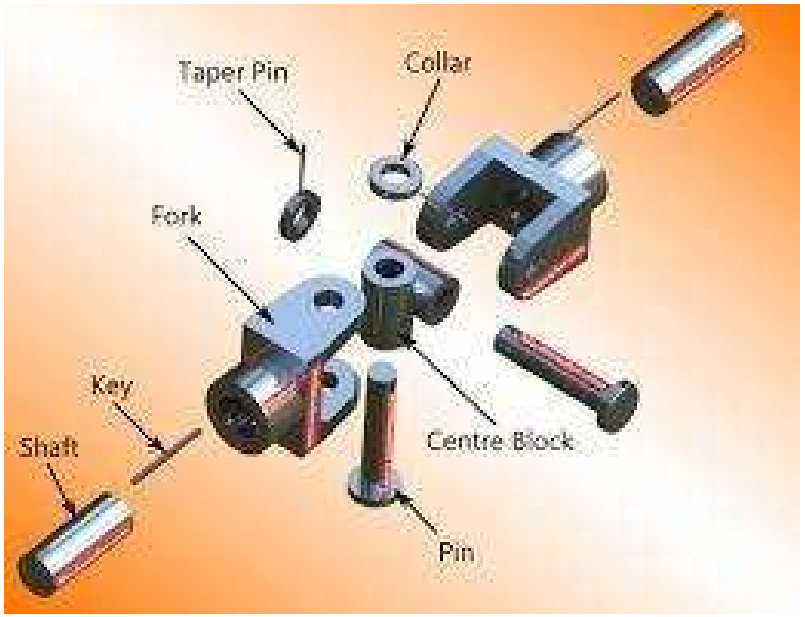

Atmiya University Rajkot

Types of misalignment

Lateral (Parallel)

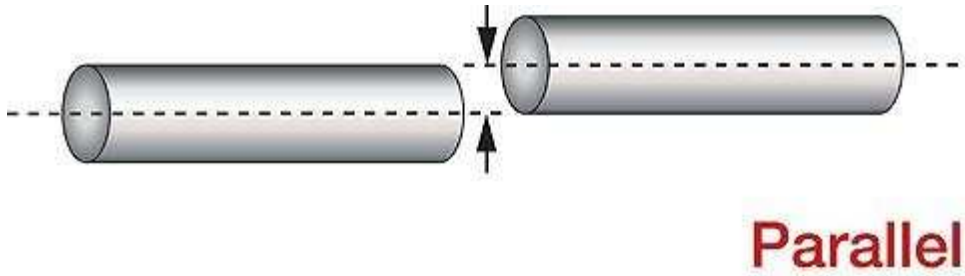

Angular

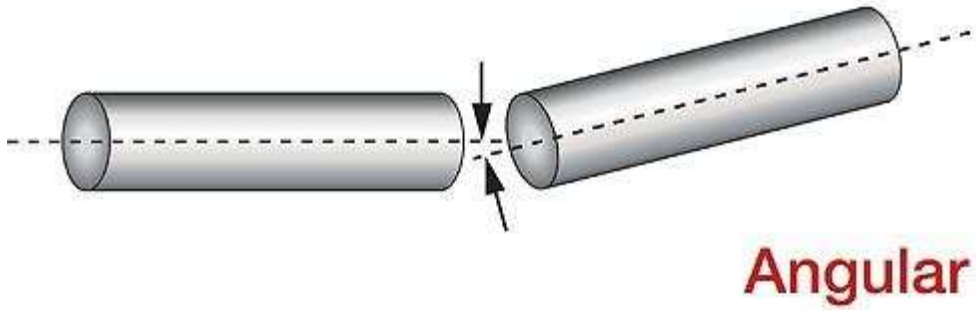

Axial

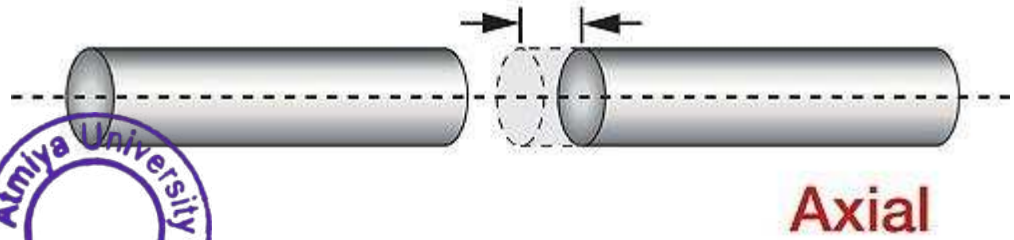

Atmiya University
Rajkot

Misalignment exists because:

1. Delflection of shaft due to lateral forces
2. error in shaft mounting due to manufacturing tolerances
3. Use of two separately manufactured units-

example- elctric motor or worm gear box

4. Thermal expansion of parts.

Atmiya University
Rajkot

A good coupling should satisfy following requirements:

1. Should be capable of transmitting torque from driving shaft to driven shaft
2. Should keep two shafts in proper alignment
3. should be easy to assemble and disassemble for repairs & alterartions.
4. Should be protected by guard or by providing suitable shape to projecting parts

As, the failure of revolving bolt head, nuts,keyheads and other projecting part may cause accidents.

Atmiya University Rajkot

Rigid Couplings & Flexible Coplings

Rigid couling	Flexible coupling
Can not tolerate misalignment	Can tolerate 1.5 º of angular misalignment & 0.5 mm of axial displacement.
Do not absorbs shocks	Absorbs shocks & vibrations
Simple & inexpensive	Costlier due to additional parts. More popular

Atmiya University Rajkot

Bushed -Pin Flexible coupling

- Similar to rigid coupling. Instaed of bolts, Pins & rubber bush are used

Atmiya University Rajkot

Bushed-pin Flexible Coupling

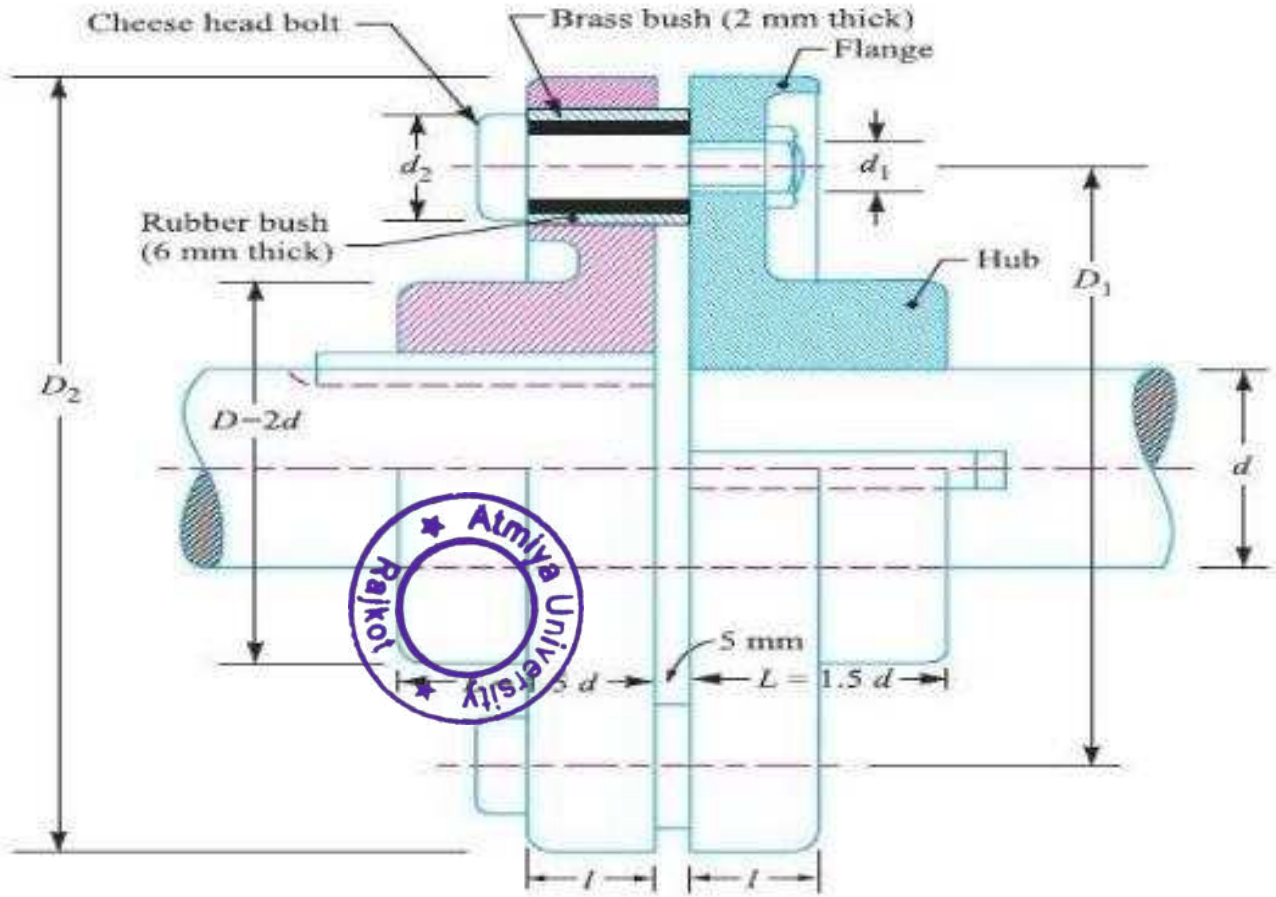

Atmiya University Rajkot

Power Transmission in Bushed-Pin Flexible Bushed-Pin Coupling

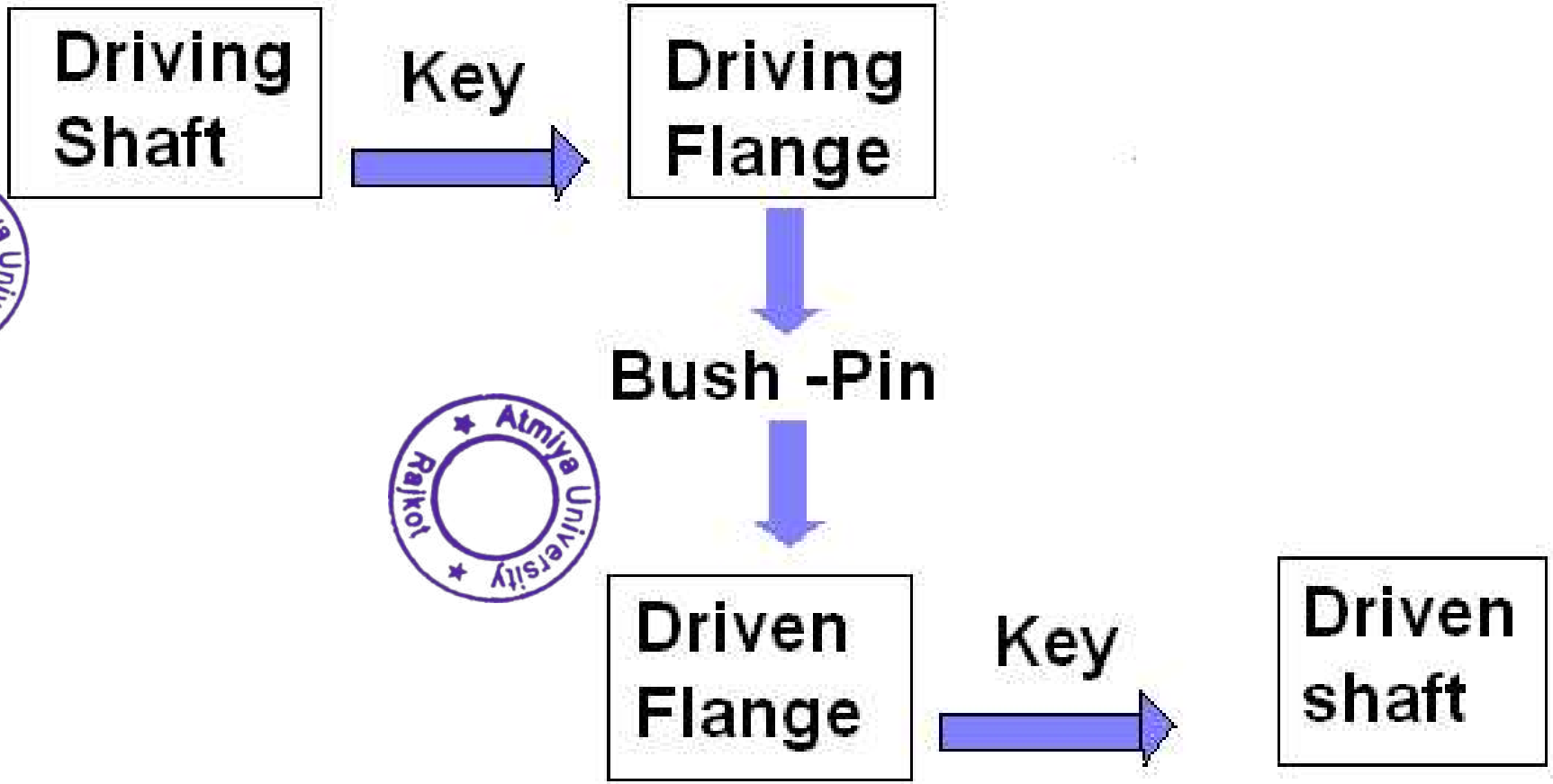

Atmiya University Rajkot
Atmiya University Rajkot

Advantages of Bushed-Pin type flexible coupling

1. It can tolerate Lateral (Axial) misalignment upto 0.5 mm & Angular misalignment of 1.5 º.
2. It prevents transmission of shocks from one shaft to another and absorbs vibrations.
3. It can be used for transmitting high toques.

Disadvantages of Bushed-Pin type flexible coupling

1. Cost is more due to additional parts
2. It requires more radial space compared with other types of couplings.

Atmiya University
Rajkot

Empirical relations

- Shaft diameter =d
- Outside diameter of Hub= d_h = 2d
- Length of Hub/ effective length of key = l_h =1.5d
- Thickness of output flange = t = 0.5 d
- Pitch circle diameter =D = 3d to 4 d
- Thickness of protective rim = t1= 0.25 d
- Diameter of pin = d1 = 0.5 d /[(N)^(1/2)]
- Number of pins=N

Atmiya University Rajkot

Analysis of Bushed-Pin coupling : (1/3)

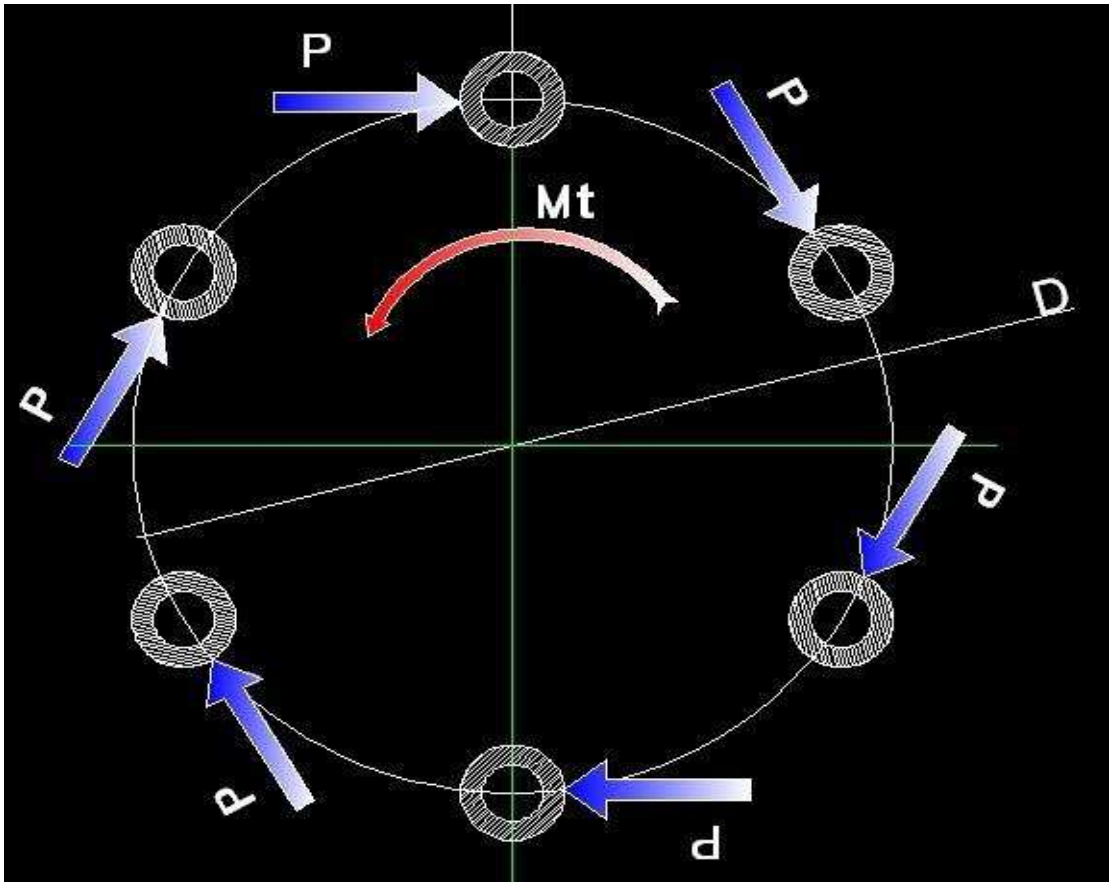

- Mt= Torque transmitted
- P= force acting on each rubber or pin
- D= Pitch circle diameter of Pins (mm)
- N = Number of bushes or pins.

Mt = P x Radius

Mt = P x (D/2) x N ---- (1)

P= Projected area x Intensity of pressure

$P = (D_b \times l_b) \times P_m$ ----- (2)

Atmiya University Rajkot

Analysis of Bushed-Pin coupling : (2/3)

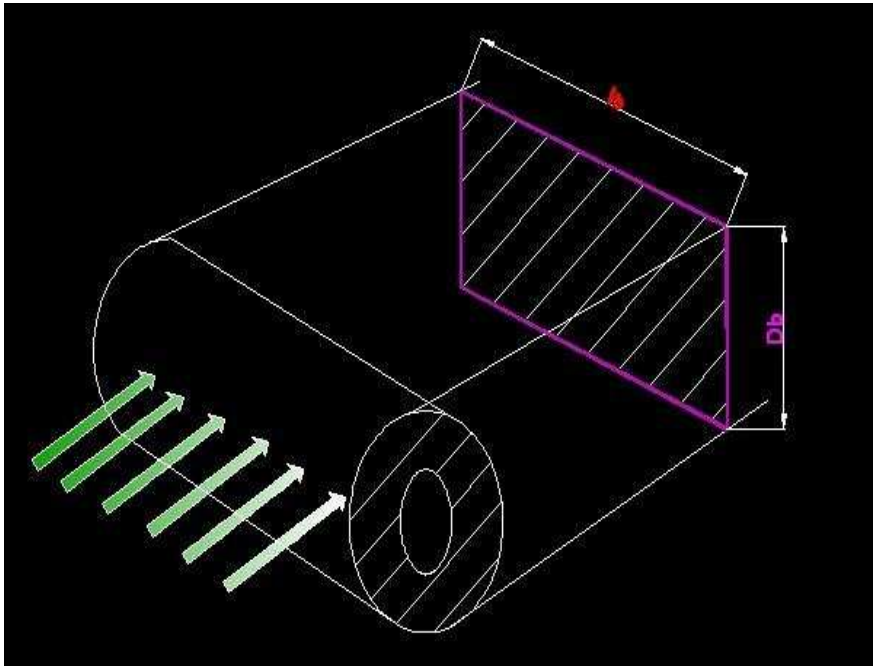

Db= Outer diameter of bush (mm)

lb= Length of bush (mm)

Pm = Permissible intensity of pressure (N/mm2) = 1 for rubber bush and cast iron flange.

Ration of lb to Db is usually=1

.: lb=Db

Projected area= Db x lb ----(2)

Putting this value in eqn (1)

$Mt= (D_b \times l_b \times P_m) \times D/2 \times N$ ----(3)

$Mt= ½ \times D_b^2 DN$ -----(4)----

Atmiya University Rajkot

Outer diameter of rubber bush is obtained by this equation

Analysis of Bushed-Pin coupling : (3/3)

Shear stress :

$T = P/(3.14\ d_1^2)$ ---(5)

$P = 2\ M_t / (D \times N)$

$\therefore T = 8\ M_t /(3.14\ d^2\ DN)$ -----(6)

According to Indian Standerds:

Allowable Shear Stress for ins is 35 N/mm2

Component	Material
Flanges	Grey cast iron Grade FG 200
Pins	Carbon Steel

Atmiya University Rajkot

More about Bushed-pin Flexible coupling

1. Pin is also aubjected to bending moment
2. Recommended fit for shft & hub is H_7-j_7
3. Maximum allowabale peripheral speed of coupling is 30 m/s
4. Features of flexible coupling:

a. Can accommodate gap between driving & driven flanges

b. Permissible stress is Pm =1 N/mm^2 which is very less than rigid type of coupling. Hence corresponding diameter of pin and PCD is larger.

5. Location of coupling:

Should be as near as possible towards bearings to avoid Bending moment due to coupling forces.

Atmiya University Rajkot

Design Procedure for Flexible coupling: (1/3)

1. Shaft Diameter
2. Dimension of flanges
3. Diameter of Pins
4. Diameter of Bushes
5. Dimension of Keys

Atmiya University
Rajkot

Muff Coupling= Sleeve coupling =Box coupling

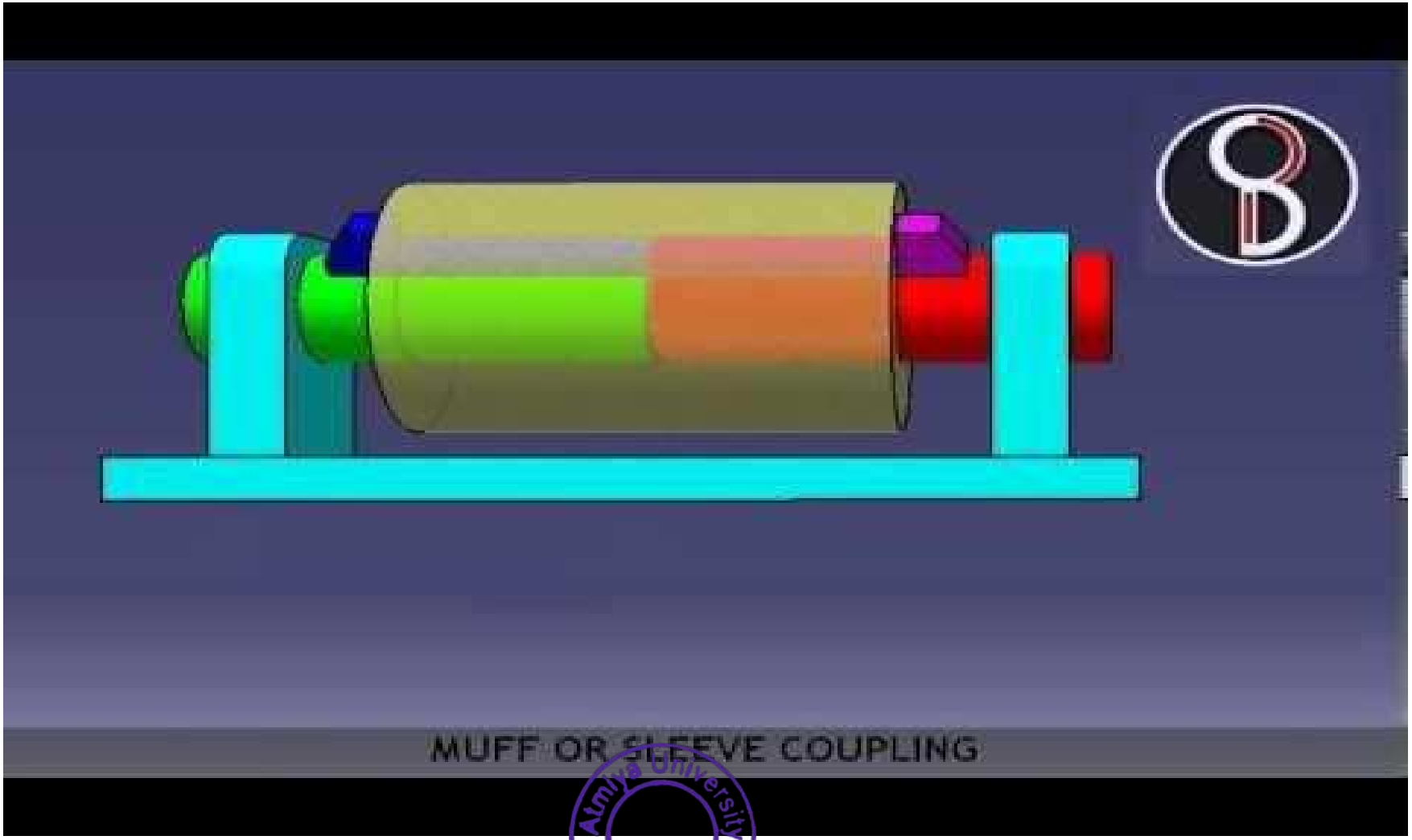

Atmiya University
Rajkot

Design Procedure for Flexible coupling: (1/3)

I **Shaft Diameter**

a Mt= [60 x 106 (kW)]/ [2 x3.14 x n]

b T = [16 Mt] / [3.14 x d3]

II **Dimensions of flanges by Emperical relations**

Shaft diameter =d
Outside diameter of Hub= dh = 2d
Length of Hub/ effective length of key = lh =1.5d
Thickness of output flange = t = 0.5 d
Pitch circle diameter =D = 3d to 4 d
Thickness of protective rim = t1= 0.25 d
Diameter of pin = d1 = 0.5 d /[(N)^(1/2)]
Number of pins=N

Torsional Shear Stress:
T = [Mt r]/ J

J

Atmiya University Rajkot

Muff Coupling

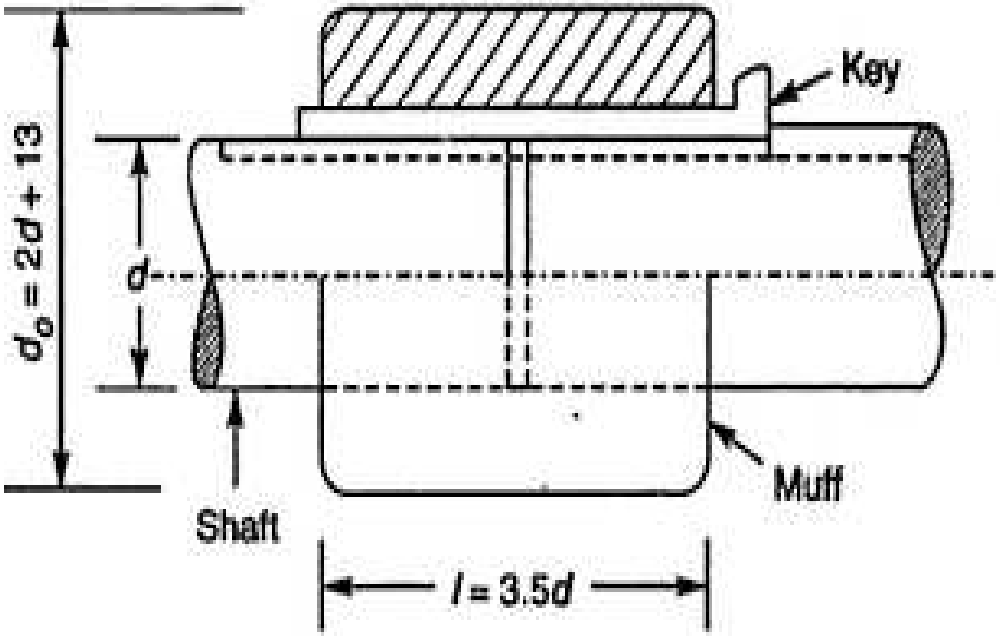

Construction:

It consists of sleeve or hollow cylinder which is fitted over the ends of input and output shafts by means of sunk key

Power Transmission in Muff Coupling:

Atmiya University Rajkot

Muff Coupling

Advantages of Muff coupling:

1. Simplest Form of coupling.

   Only two Parts: Sleeve & Key

   Simple to design & manufacture.

2. No projecting parts except key head. External Surface is Smooth & safe.

3. Compact construction with small radial dimensions

4. Cheaper than other types of couplings.

Atmiya University Rajkot

Muff Coupling

Disadvantages of Muff coupling:

1. Difficult to assemble or disassemble (dismantle).
2. Rigid type of coupling & requires accurate alignment of shafts
3. No flexible element hence do not absorb shocks & vibrations.
4. It requires more axial space compared with flange coupling

Less popular and can be used for shaft diameter upto 70 mm.

Atmiya University Rajkot

Muff Coupling

Emperical Relations:

D= (2d +13)

L = 3.5 d

D= Outer diameter of sleeve

L= Length of sleeve

D= Diameter of shaft

Atmiya University
Rajkot

Muff Coupling

Design procedure for Muff coupling:

1. Calculate diameter of each shaft:

   $T = [60 \times 10^6 \times (kW)]/2\pi n$, $\tau = [16\ T]/\pi d^3$

2. Calculate dimensions of sleeve using ratios:

   $D = (2d+13)$, $L = 3.5\ d$

3. Check for torsional shear stress induced in the sleeve

   $\tau = [T.D]/[(\pi/16)(D^4 - d^4)]$

4. Determine standard dimensions of key

   Table

5. Check shear & compressive stress in key.

   $\tau = [2T]/dbl$, $\sigma = [4\ T]/dhl$

Atmiya University Rajkot

Clamp Coupling= Split Muff Coupling= Compression coupling

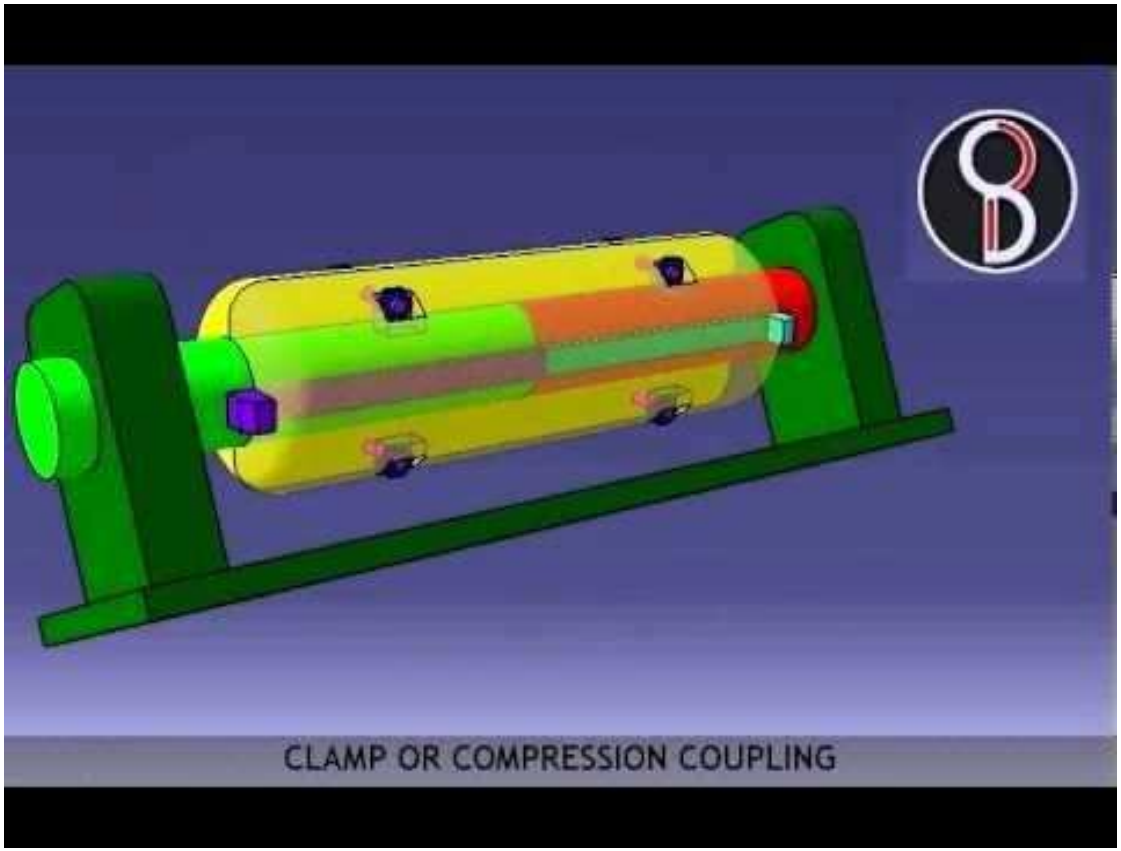

Atmiya University
Rajkot

Clamp or Compression Coupling

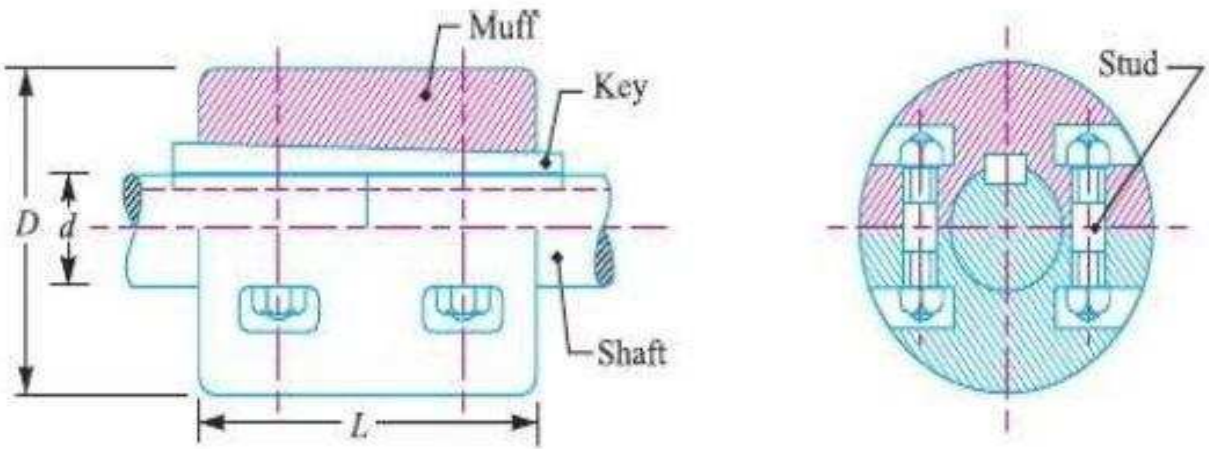

Construction:

1. Coupling sleeve is made up of two halves that are clamed together with bolts.
2. Number of bolts =2,4,8 etc. (multiples of four)
3. Bolts are placed in the recesses formed in the sleeve halves.

Atmiya University Rajkot

Clamp or Compression Coupling

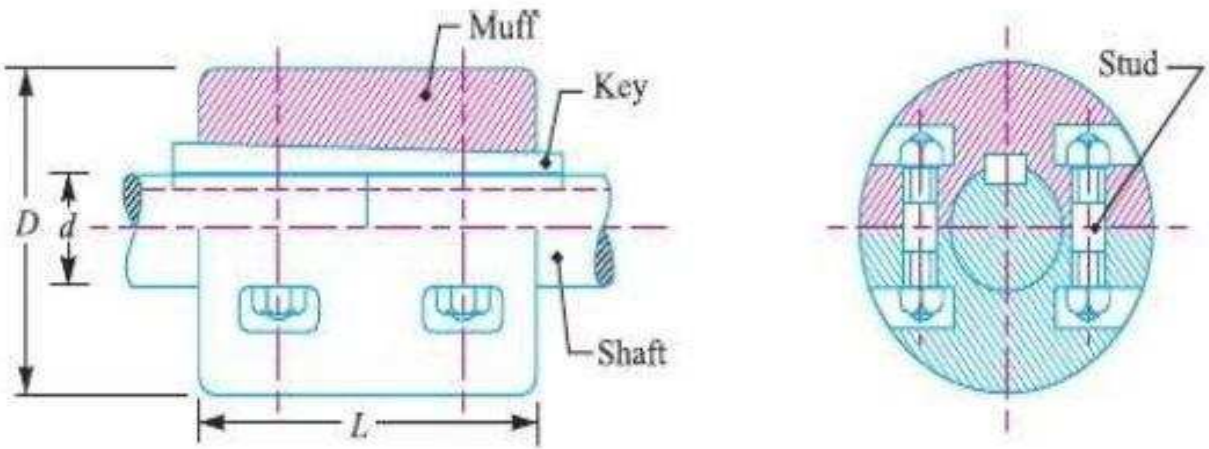

Construction:

1. Coupling sleeve is made up of two halves that are clamed together with bolts.
2. Number of bolts =2,4,8 etc. (multiples of four)
3. Bolts are placed in the recesses formed in the sleeve halves.

Atmiya University Rajkot

Clamp Coupling= Split Muff Coupling= Compression coupling

Advantages of clamp coupling:

1. Easy to assemble & dismantle
2. Easy to remove without shifting the shaft in axial direction unlike solid muff coupling.
3. As compared to flange coupling, small diametral dimensions.

Application of clamp coupling:

Line shaft in power transmission which has become obsolete nowadays.

Atmiya University Rajkot

Clamp Coupling= Split Muff Coupling= Compression coupling

Disadvantages of clamp coupling:

1. Difficult in dynamic balancing. So cannot be used for high speed applications
2. unsuitable for shock loads
3. It is necessary to provide a guard for coupling to comply with Factory Regulation Act.

Atmiya University Rajkot

Muff coupling Vs. Clamp Coupling

Muff coupling	Clamp Coupling
Torque is transmitted by shear resistance of keys	Torque is transmitted by 1] Friction between sleeve halves & shaft 2]shear resistance of keys

Atmiya University Rajkot

Clamp Coupling= Split Muff Coupling= Compression coupling

Ratios:

1. $D=2.5\ d$
2. $L = 3.5\ d$

   Where,

   D= Outer diameter of Sleeve halves (mm)

   L= Length of Sleeve (mm)

   D= Diameter of shaft (mm)

3. **Diametr of clamping bolt:**

   $D_1 = 0.2d + 10$ …... When $d < 55$ mm

   $D_1 = 0.15d + 15$ ……When $d > 55$ mm

Atmiya University Rajkot

Clamp Coupling= Split Muff Coupling= Compression coupling

Ratios:

4. Clamping force on each bolt:

$$P_1 = \pi/4.\ D_1^2.\sigma_t$$

5. Claming force on each shaft:

$$N = P_1 n/2$$

6. $M_t = [\ f.d.\ P_1.n]\ /2$

Or

$$P1 = [2\ Mt]/\ [\ f.d.N]$$

Atmiya University Rajkot

Rigid flange coupling

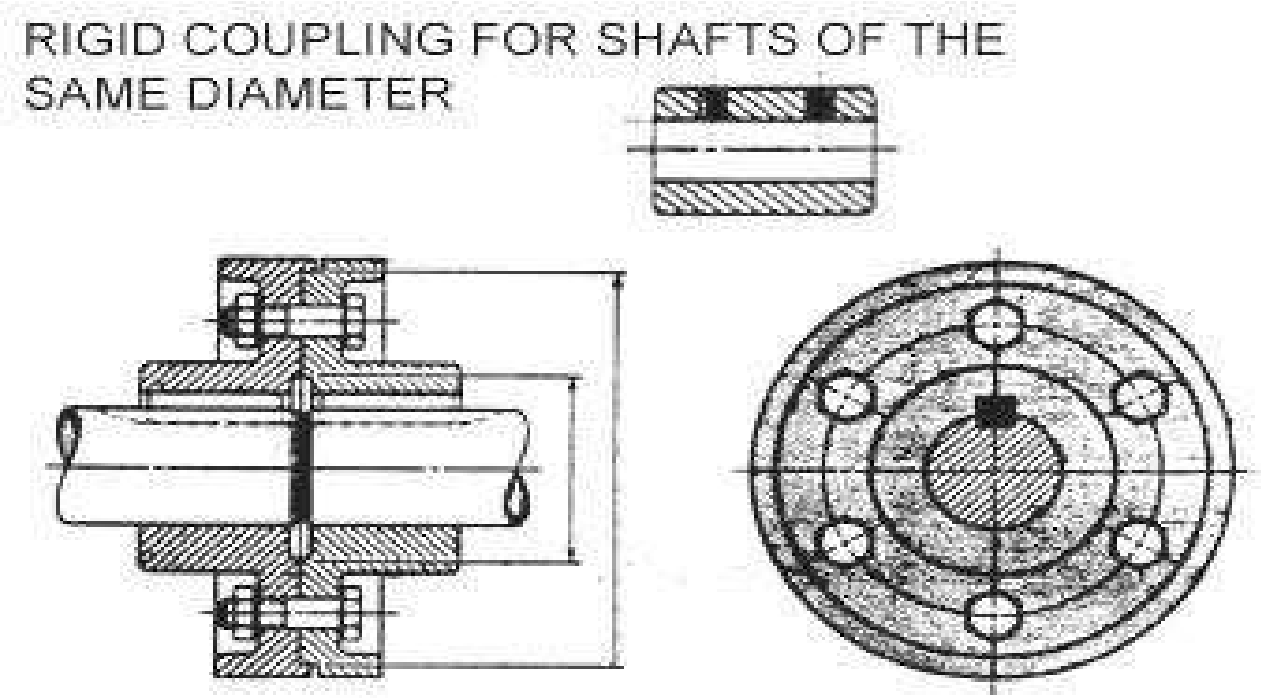

Atmiya University
Rajkot

Rigid flange coupling

Since rigid type of coupling, it requires precise location.

Spigot & recess are provided for precise location.

Spigot=cylindrical projection provided on driving flange.

Recess= Corresponding hollow part on driven flange.

Spigot & recess are machined with more accuracy.

Atmiya University
Rajkot

Rigid flange coupling

Construction:

Two flanges each key to one shaft.

Both flanges are connected by means of bolts arranged on PCD.

Power transmission:

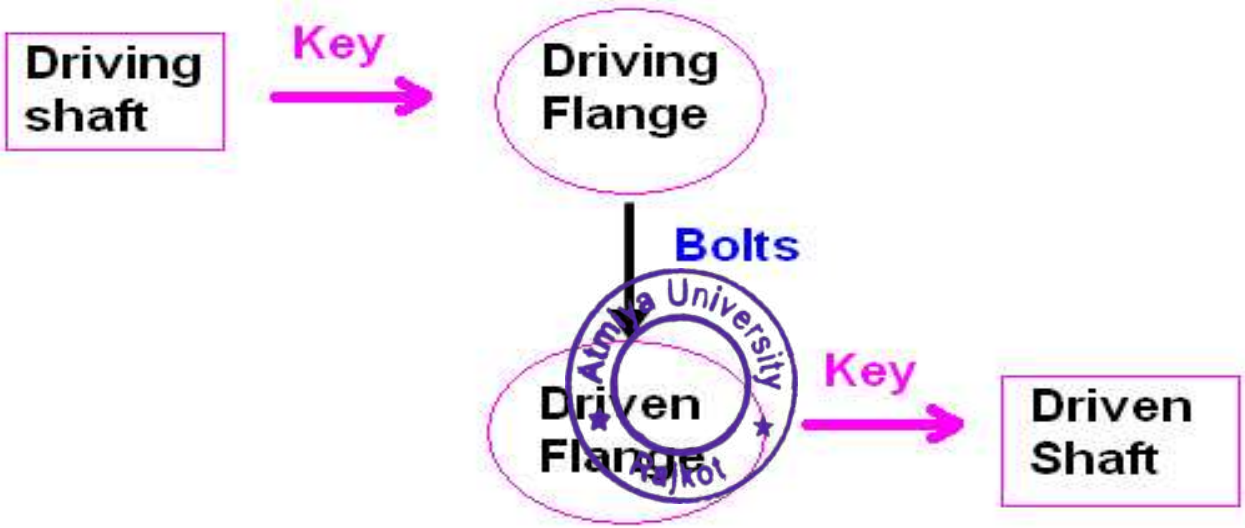

Design of Machine Elements (DME)
(21BTMECC304)
Unit No.3
Design of Keys

Prepared By:-Shivang S. Jani
Asst. Professor
Mechanical Engineering Department

DESIGN OF KEYS

Atmiya University Rajkot

Atmiya University Rajkot

- A key is a piece of mild steel inserted between the shaft and hub or boss of the pulley to connect these together in order to prevent relative motion between them.
- It is always inserted parallel to the axis of the shaft.
- Keys aroused as temporary fastenings and are subjected to consider-able crushing and shearing stresses

Atmiya University Rajkot

Types of Keys

- 1. Sunk keys,
- 2. Saddle keys,
- 3. Tangent keys,
- 4.Round keys, and
- 5. Spines.

Atmiya University
Rajkot

Sunk Keys

- The sunk keys are provided half in the keyway of the shaft and half in the keyway of the hub or boss of the pulley.
- The sunk keys are of the following type
- 1 Rectangular sunk key
- 2. Square sunk key
- 3. Parallel sunk key
- 4.Gib-head key
- 5. Feather key
- 6. Woodruff key

Atmiya University Rajkot

1. Rectangular sunk key

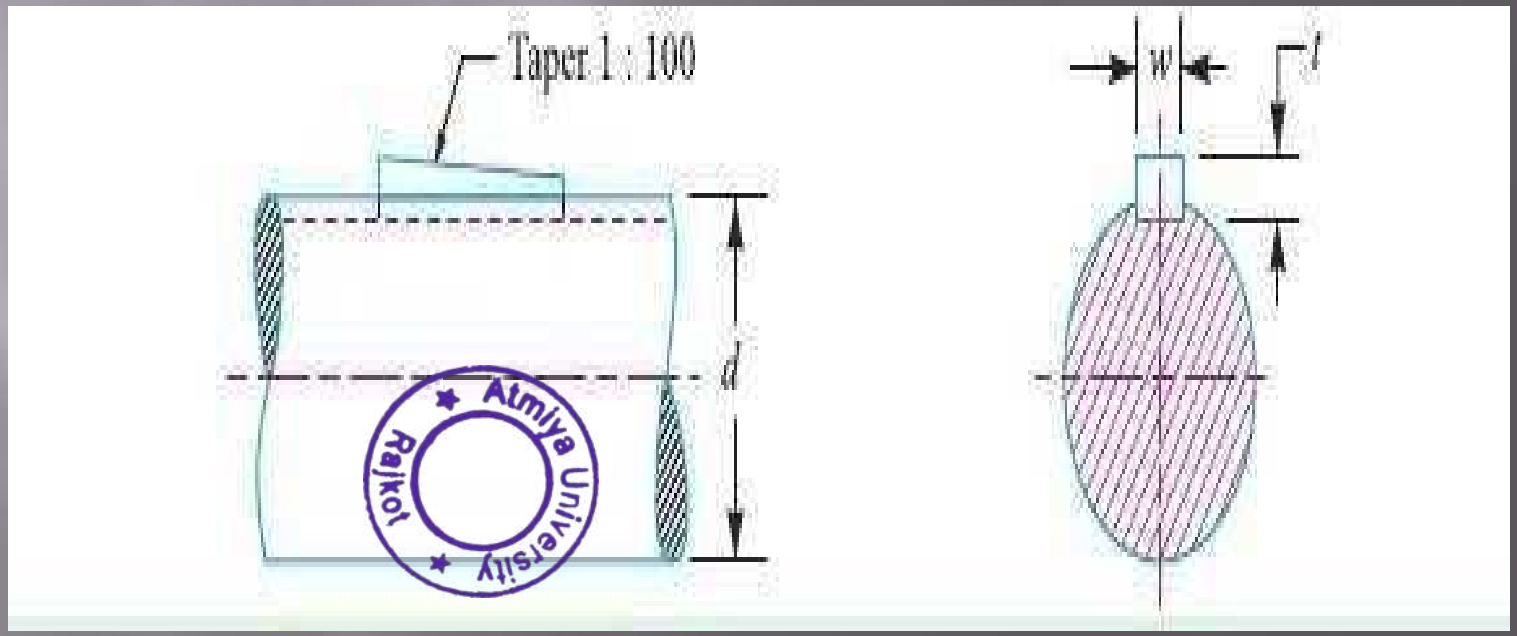

Atmiya University Rajkot

- A rectangular sunk key is shown in above Fig. The usual proportionsof this key are :

- width of key, $w = d / 4$;
- thickness of key, $t = 2w / 3 = d / 6$
- Where d =Diameter of the shaft or diameter of the hole in the hub.
- The key has taper 1 in 100 on the top side only

Atmiya University Rajkot

2. Square sunk key

- The only difference between a rectangular sunk key and a square sunk key is that its width and thickness are equal,

i.e. $w = t = d/4$

Atmiya University Rajkot

3. Parallel sunk key

- The parallel sunk keys may be of rectangular or square section uniform in width and thickness throughout. It may be noted that a parallel key is a taper less
- It is used where the pulley, gear or other mating piece is required to slide along the shaft

Atmiya University Rajkot

4.Gib-head key

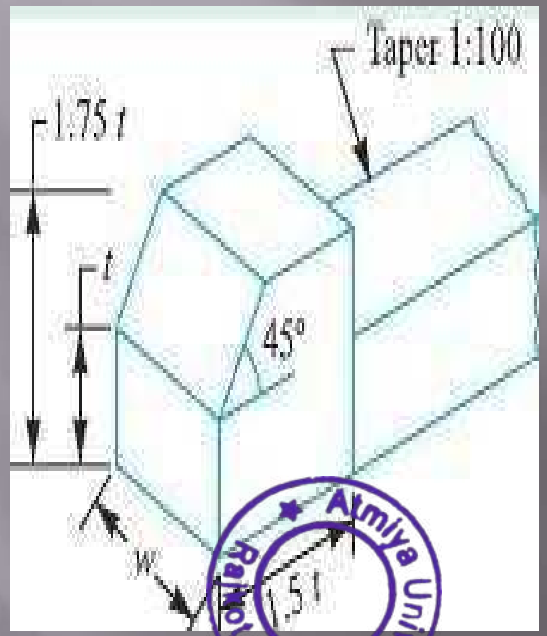

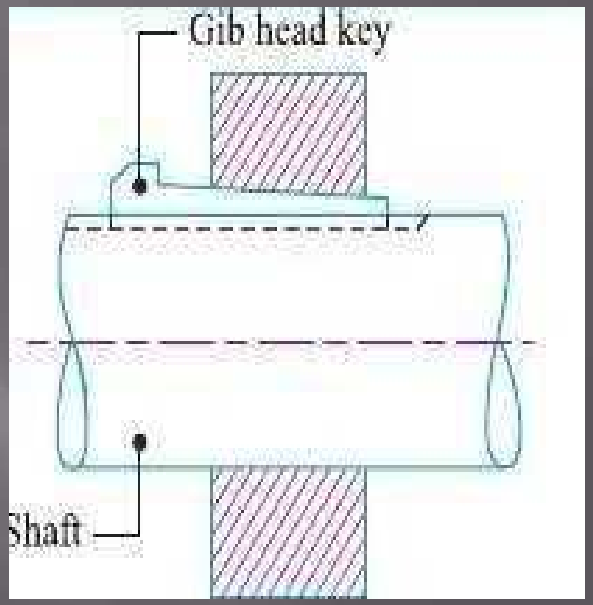

Atmiya University Rajkot

- It is a rectangular sunk key with a head at one end known as gib head .
- It is usually provided to facilitate the removal of key.

- The usual proportions of the gib head key are :
- Width, $w = d / 4$;
- thickness at large end, $t = 2w / 3 = d / 6$

Atmiya University Rajkot

5. Feather key

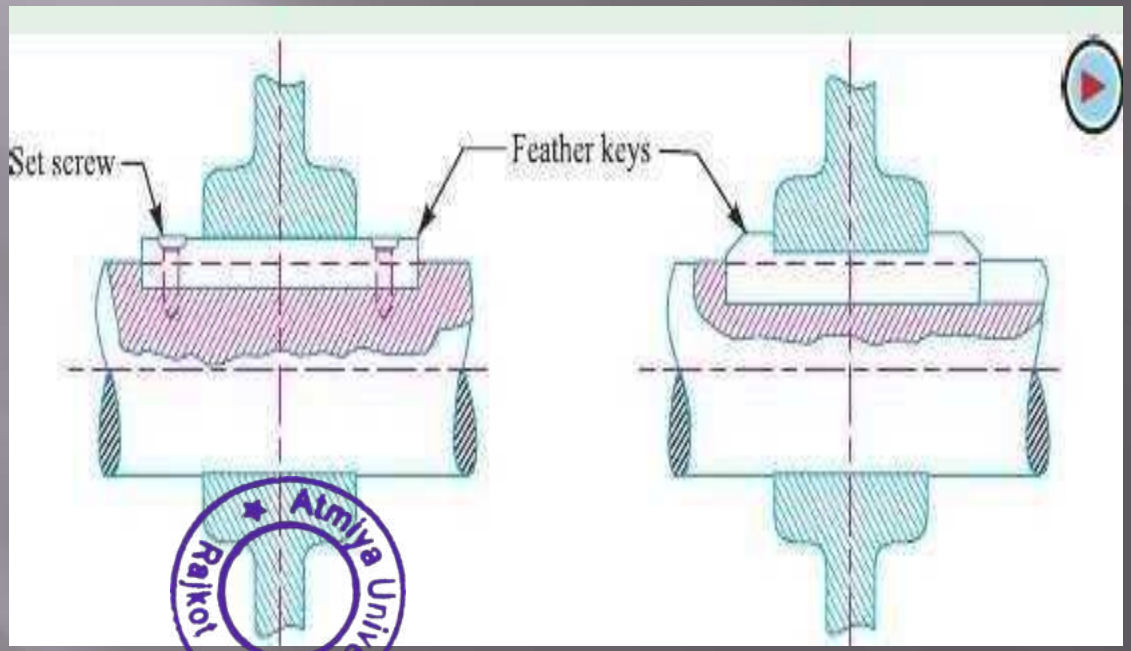

Atmiya University Rajkot
Atmiya University Rajkot

- A key attached to one member of a pair and which permits relative axial movement is known as feather key .
- It is a special type of parallel key which transmits a turning moment and also permits axial movement. It is fastened either to the shaft or hub, the key being a sliding fit in the key way of the moving piece

Atmiya University Rajkot

6. Woodruff key

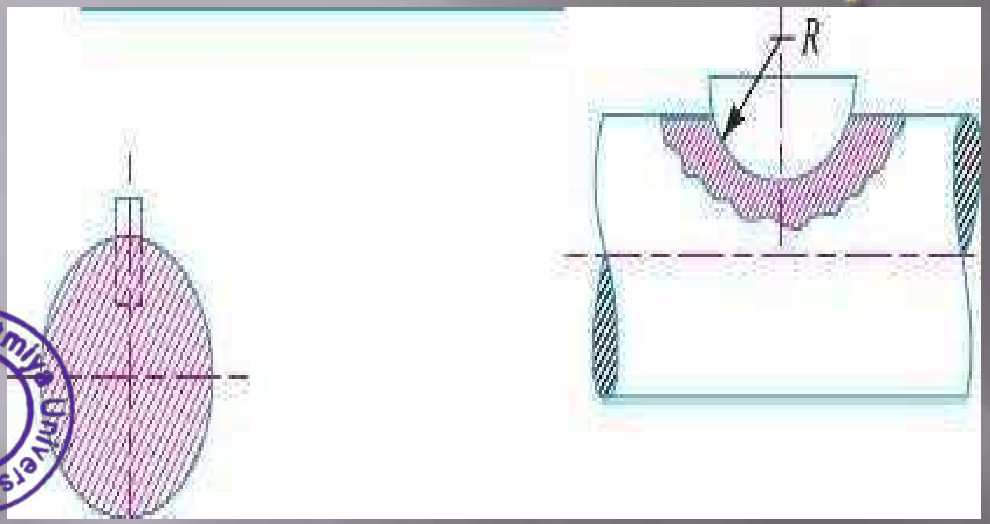

Atmiya University Rajkot

- The woodruff key is an easily adjustable key. It is a piece from a cylindrical disc having segmental cross-section in front view as shown in Fig.
- A woodruff key is capable of tilting in a recess milled out in the shaft by a cutter having the same curvature as the disc from which the key is made. This key is largely used in machine tool and automobile construction

Atmiya University Rajkot

- The main advantages of a woodruff key

1.It accommodates itself to any taper in the hub or boss of the mating piece.

2.It is useful on tapering shaft ends. Its extra depth in the shaft prevents any tendency to turnover in its keyway.

- The disadvantages are :

1.The depth of the keyway weakens the shaft.

2.It can not be used as a feather

Atmiya University Rajkot

The saddle keys are of the following two types

1. Flat saddle key, and
2. Hollow saddle key.

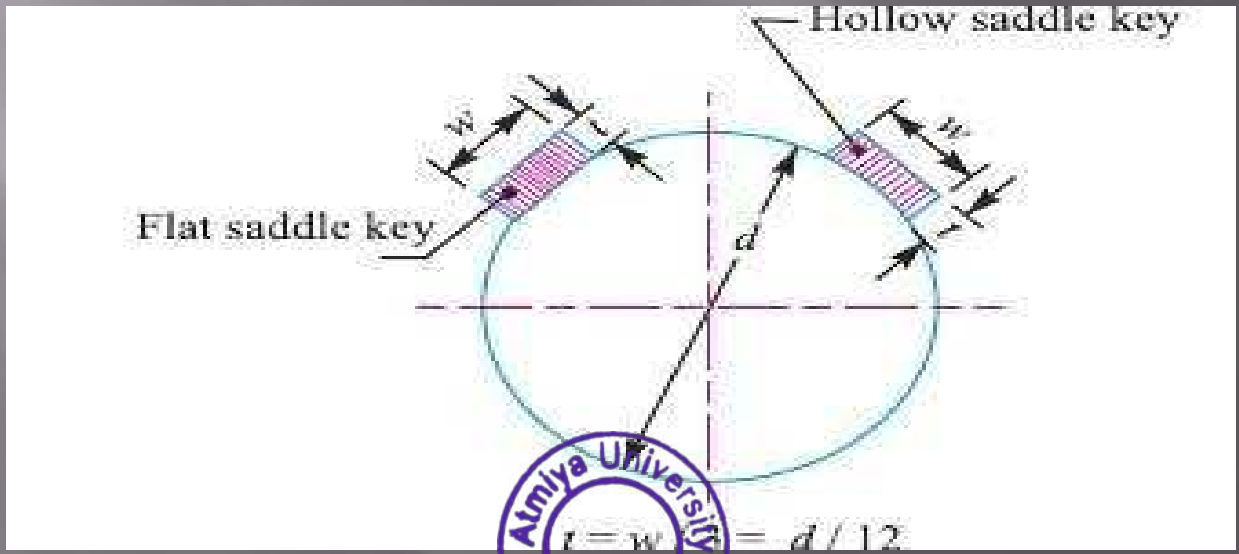

Atmiya University Rajkot

- A flat saddle key is a taper key which fits in a keyway in the hub and is flat on the shaft as shown in Fig.
- It is likely to slip round the shaft under load. Therefore it is used for comparatively light loads
- A hollow saddle key is a taper key which fits in a keyway in the hub and the bottom of the key is shaped to fit the curved surface of the shaft. Since hollow saddle keys hold on by friction.
- therefore these are suitable for light loads. It is usually used as a temporary fastening in fixing and setting eccentrics, cams etc

Atmiya University Rajkot

Tangent Keys

The tangent keys are fitted in pair at right angles as shown in Fig. Each key is to with standtorsion in one direction only. These are used in large heavy duty shafts.

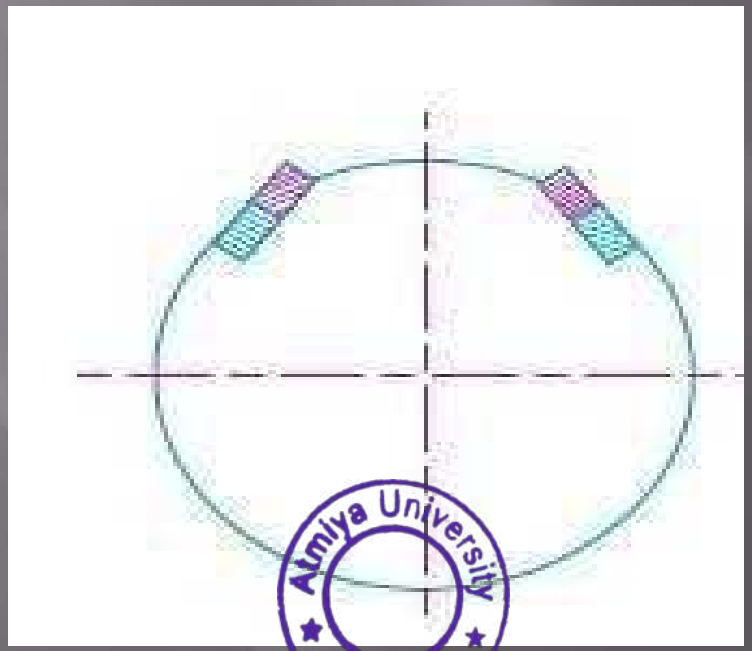

Atmiya University
Rajkot

Round Keys

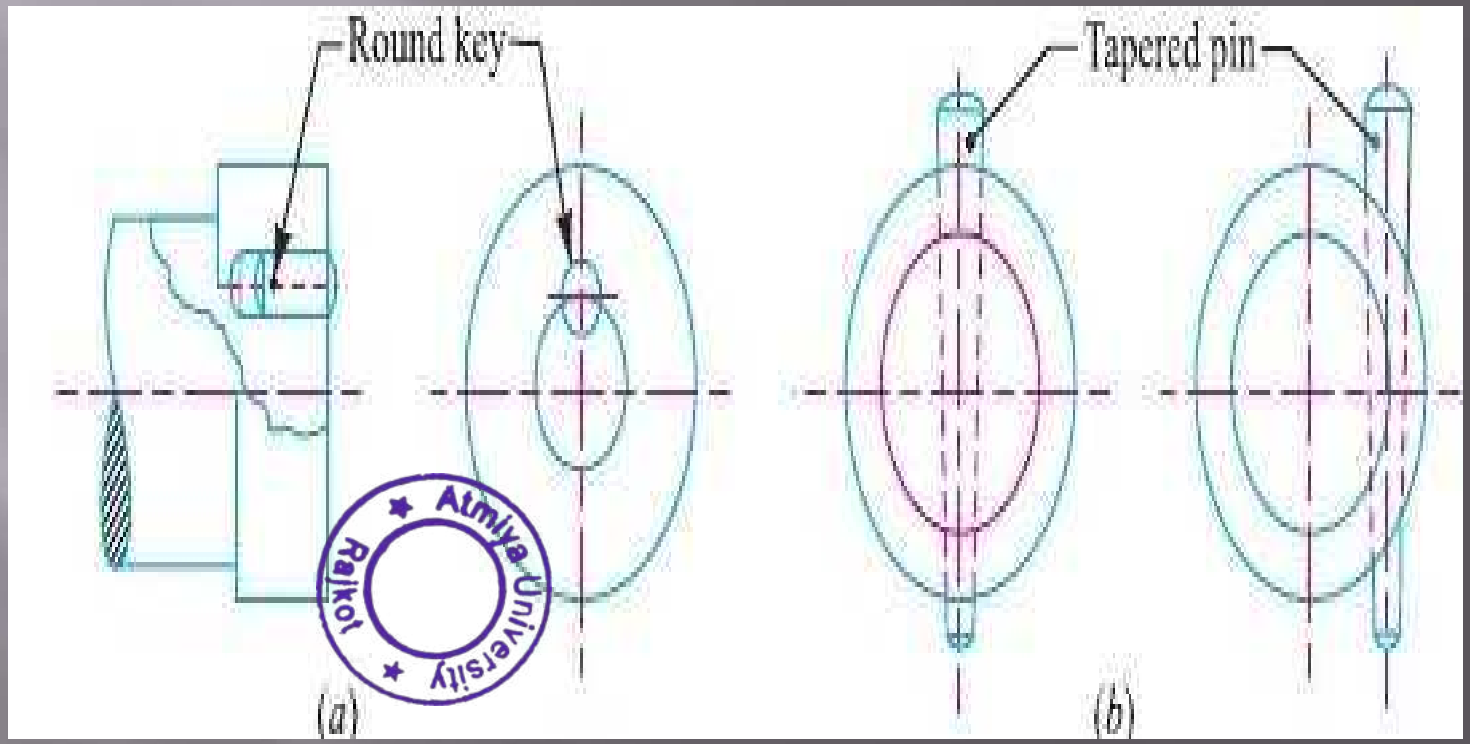

Atmiya University Rajkot

- The round keys, as shown in Fig (a), are circular in section and fit into holes drilled partly in the shaft and partly in the hub.
- They have the advantage that their keyways may be drilled and reamed after the mating parts have been assembled. Round keys are usually considered to be most appropriate for low power drive
- Sometimes the tapered pin, as shown in Fig. (b), is held in place by the friction between the pin and the reamed tapered hole

Atmiya University Rajkot

Splines

$D = 1.25\ d$ and $b = 0.25\ D$

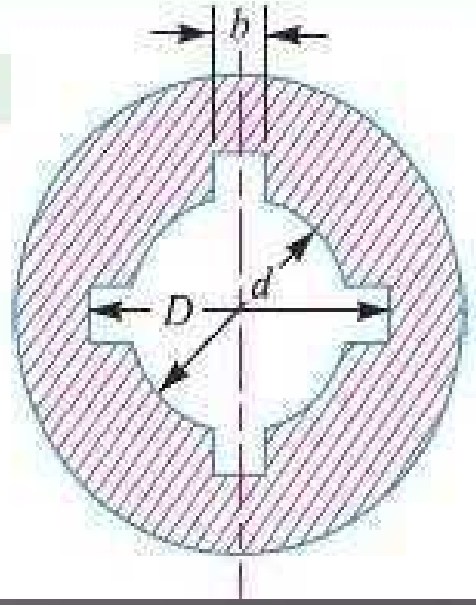

Atmiya University Rajkot

Atmiya University Rajkot

- Sometimes, keys are made integral with the shaft which fits in the keyways broached in the hub.
  Such shafts are known as splined shafts as shown
  in Fig.
- These shafts usually have four, six, ten or sixteensplines. The splined shafts are relatively stronger than shafts having a single keyway.
- The splined shafts are used when the force to be transmitted is large in proportion to the size of the shaft as in automobile transmission and sliding gear transmissions.
- By using splined shafts, we obtain axial movement as well as positive drive is obtained

Atmiya University Rajkot

Forces acting on a Sunk Key

- When a key is used in transmitting torque from a shaft to a rotor or hub, the following two types of forces act on the key :

- 1.Forces (F1) due to fit of the key in its keyway, as in a tight fitting straight key or in a tapered key driven in place. These forces produce compressive stresses in the key which are difficult to determine in magnitude.

- 2.Forces (F) due to the torque transmitted by the shaft. These forces produce shearing and compressive (or crushing) stresses in the key.

Atmiya University Rajkot

- The distribution of the forces along the length of the key is not uniform because the forces are concentrated near the torque-input end.
- The non-uniformity of distribution is caused by the twisting of the shaft within the hub.
- In designing a key, forces due to fit of the key are neglected and it is assumed that the distribution of forces along the length of key is uniform.

Atmiya University Rajkot

Strength of a Sunk Key

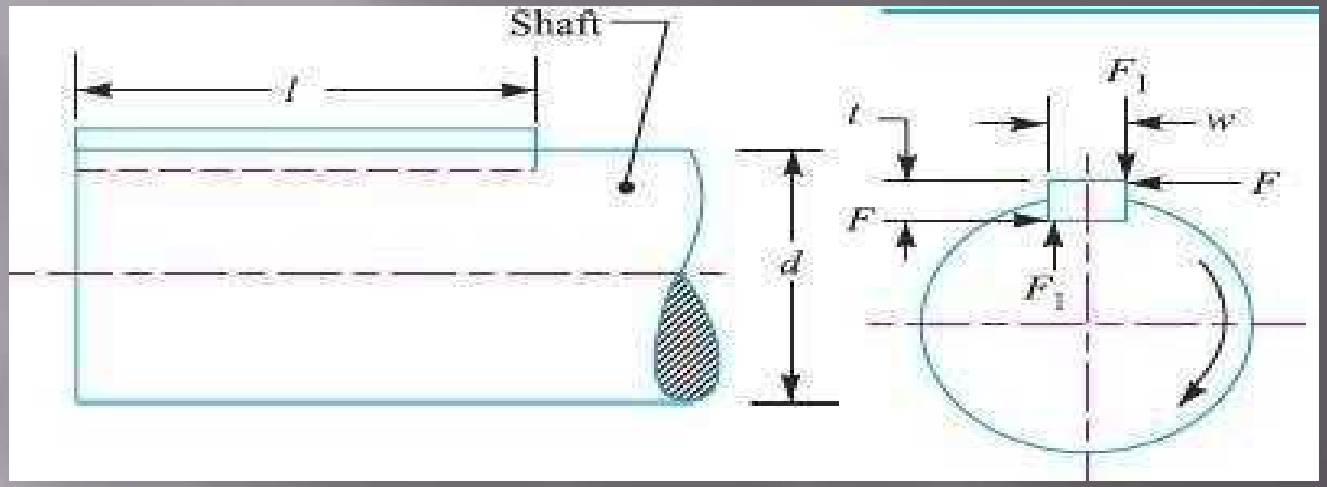

The forces acting on a key for a clockwise torque being transmitted from a shaft to a hub are shown in Fig above.

Atmiya University Rajkot

- Let
- T =Torque transmitted by the shaft,
- F =Tangential force acting at the circumference of the shaft,
- D =Diameter of shaft,
- l=Length of key,
- w=Width of key.
- T =Thickness of key, and
- τ =Shear stresses for the material of key
- σc=crushing stresses for the material of key

Atmiya University Rajkot

- A little consideration will show that due to the power transmitted by the shaft, the key may fail due to shearing or crushing.
- Considering shearing of the key, the tangential shearing *force acting at the* circumference of the shaft,
- F =Area resisting shearing × Shear stress
- $F = L \times w \times \tau$
- ∴Torque transmitted by the shaft
- $T = F \times d/2 = l \times w \times \tau \times d/2$ ……(i)

Atmiya University Rajkot

- Considering crushing of the key, the tangential crushing force acting at the circumference of the shaft,
- F = Area resisting crushing × Crushing stress
- $F = l \times t/2 \times \sigma_c$
- ∴Torque transmitted by the shaft,
- $T = F \times d/2 = l \times t/2 \times \sigma_c \times d/2$ .....(ii)

Atmiya University Rajkot

- The key is equally strong in shearing and crushing
- EQUATION (i) = (ii)
- $L \times w \times \tau \times d/2 = l \times t/2 \times \sigma_c \times d/2$

  $W/t = \sigma_c/2\tau$ ……(iii)
- The permissible crushing stress for the usual key material is at least twice the permissible shearing stress.
- Therefore from above equation we have $w = t$
- In other words, a square key is equally strong in shearing and crushing

Atmiya University Rajkot

- In order to find the length of the key to transmit full power of the shaft, the shearing strength of the key is equal to the torsional shear strength of the shaft.
- We know that the shearing strength of key,

$$T = l \times w \times \tau \times d/2 \ldots\ldots\ldots\ldots\ldots\ldots\ldots (iv)$$

- torsional shear strength of the shaft

$$T = (\pi/16) \times d^3 \times \tau_1 \ldots\ldots\ldots\ldots (v)$$

Taking $\tau 1$= Shear stress for the shaft material

Atmiya University Rajkot

- From equations (iv) and (v), we have

$$w \times l \times \tau \times d/2 = (\pi/16) \times d^3 \times \tau 1$$

for sunk key width= (w)= d/4

- When the key material is same as that of the shaft, then $\tau = \tau 1$

l=1.571d

Atmiya University Rajkot

Design of Machine Elements (21BTMECC304)
B. Tech. Sem. III

Design of Shaft

Prepared By:- Shivang S. Jani
Asst. Professor
Mechanical Engineering Department

Design of Shaft

A shaft is a rotating member usually of circular cross-section (solid or hollow), which transmits power and rotational motion.

Machine elements such as gears, pulleys (sheaves), flywheels, clutches, and sprockets are mounted on the shaft and are used to transmit power from the driving device (motor or engine) through a machine.

Press fit, keys, dowel, pins and splines are used to attach these machine elements on the shaft.

The shaft rotates on rolling contact bearings or bush bearings.

Various types of retaining rings, thrust bearings, grooves and steps in the shaft are used to take up axial loads and locate the rotating elements.

Couplings are used to transmit power from drive shaft (e.g., motor) to the driven shaft (e.g. gearbox, wheels).

Atmiya University
Rajkot

Talking Points

Shaft?

Shaft Design

ASME Shaft Equations

Design of Shaft for Torsional Rigidity

Standard Sizes of Shafts

Bending and Torsional Moments

Atmiya University
Rajkot

The connecting shaft is loaded primarily in torsion.

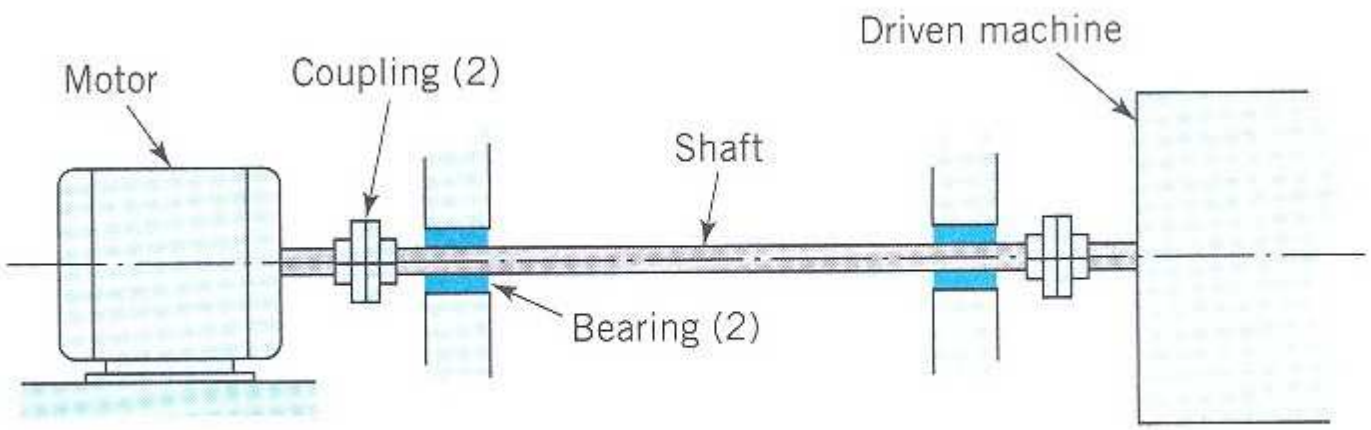

(*a*) Connecting shaft

Atmiya University
Rajkot

Introduction

A shaft is a rotating machine element which is used to transmit power from one place to another. The power is delivered to the shaft by some tangential force and the resultant torque (or twisting moment) set up within the shaft permits the power to be transferred to various machines linked up to the shaft.

In order to transfer the power from one shaft to another, the various members such as pulleys, gears etc., are mounted on it. These members along with the forces exerted upon them causes the shaft to bending.

In other words, we may say that **a shaft is used for the transmission of torque and bending moment.** The various members are mounted on the shaft by means of keys or splines.

Atmiya University
Rajkot

Notes:

1.The shafts are usually cylindrical, but may be square or cross-shaped in section. They are solid in cross-section but sometimes hollow shafts are also used.

2.An *axle,* though similar in shape to the shaft, is a stationary machine element and is used for the transmission of bending moment only. It simply acts as a support for some rotating body such as hoisting drum, a car wheel or a rope sheave.

3.A *spindle* is a short shaft that imparts motion either to a cutting tool (e.g. drill press spindles) or to a work piece (*e.g. lathe spindles).*

Atmiya University
Rajkot

Material Used for Shafts

The material used for shafts should have the following properties :

1. It should have high strength.
2. It should have good machinability.
3. It should have low notch sensitivity factor.
4. It should have good heat treatment properties.
5. It should have high wear resistant properties.

The material used for ordinary shafts is carbon steel of grades 40 C 8, 45 C 8, 50 C 4 and 50 C 12.

The mechanical properties of these grades of carbon steel are given in the following table.

Table 14.1. Mechanical properties of steels used for shafts.

Indian standard designation	*Ultimate tensile strength, MPa*	*Yield strength, MPa*
40 C 8	560 - 670	320
45 C 8	610 - 700	350
50 C 4	640 - 760	370
50 C 12	700 Min.	390

When a shaft of high strength is required, then an alloy steel such as nickel, nickel-chromium or chrome-vanadium steel is used.

Atmiya University Rajkot

Manufacturing of Shafts

Shafts are generally manufactured by hot rolling and finished to size by cold drawing or turning and grinding. The cold rolled shafts are stronger than hot rolled shafts but with higher residual stresses.

The residual stresses may cause distortion of the shaft when it is machined, especially when slots or keyways are cut. Shafts of larger diameter are usually forged and turned to size in a lathe.

Atmiya University
Rajkot

Types of Shafts

The following two types of shafts are important from the subject point of view :

1.Transmission shafts. These shafts transmit power between the source and the machines absorbing power. The counter shafts, line shafts, over head shafts and all factory shafts are transmission shafts. Since these shafts carry machine parts such as pulleys, gears etc., therefore they are subjected to bending in addition to twisting.

2.Machine shafts. These shafts form an integral part of the machine itself. The crank shaft is an example of machine shaft.

Atmiya University Rajkot

Standard Sizes of Transmission Shafts

The standard sizes of transmission shafts are :
25 mm to 60 mm with 5 mm steps; 60 mm to 110 mm with 10 mm steps ; 110 mm to 140 mm with 15 mm steps ; and 140 mm to 500 mm with 20 mm steps.
The standard length of the shafts are 5 m, 6 m and 7 m.

Atmiya University
Rajkot

Stresses in Shafts

The following stresses are induced in the shafts :

1.Shear stresses due to the transmission of torque (*i.e. due to torsional load).*

2.Bending stresses (tensile or compressive) due to the forces acting upon machine elements like gears, pulleys etc. as well as due to the weight of the shaft itself.

3. Stresses due to combined torsional and bending loads.

Atmiya University
Rajkot

Maximum Permissible Working Stresses for Transmission Shafts

According to American Society of Mechanical Engineers (ASME) code for the design of transmission shafts, the maximum permissible working stresses in tension or compression may be taken as

(a) 112 MPa for shafts without allowance for keyways.

(b) 84 MPa for shafts with allowance for keyways.

For shafts purchased under definite physical specifications, the permissible tensile stress (σt) may be taken as 60 percent of the elastic limit in tension (σel), *but not more than 36 per cent of the* ultimate tensile strength (σu). *In other words, the permissible tensile stress,*

$$\sigma t = 0.6\,\sigma el \text{ or } 0.36\,\sigma u, \text{ whichever is less.}$$

The maximum permissible shear stress may be taken as

(a) 56 MPa for shafts without allowance for key ways.

(b) 42 MPa for shafts with allowance for keyways.

For shafts purchased under definite physical specifications, the permissible shear stress (τ) may be taken as 30 per cent of the elastic limit in tension (σel) *but not more than 18 percent of the ultimate* tensile strength (σu). *In other words, the permissible shear stress,*

$$\tau = 0.3\,\sigma el \text{ or } 0.18\,\sigma u, \text{ whichever is less.}$$

Atmiya University Rajkot

Design of Shafts

The shafts may be designed on the basis of

1. Strength, and **2. Rigidity and stiffness.**

In designing shafts on the basis of strength, the following cases may be considered :

(a) Shafts subjected to twisting moment or torque only,

(b) Shafts subjected to bending moment only,

(c) Shafts subjected to combined twisting and bending moments, and

(d)Shafts subjected to axial loads in addition to combined torsional and bending loads.

We shall now discuss the above cases, in detail, in the following pages.

Atmiya University
Rajkot

Shafts Subjected to Twisting Moment Only

When the shaft is subjected to a twisting moment (or torque) only, then the diameter of the shaft may be obtained by using the torsion equation. We know that

$$\frac{T}{J} = \frac{\tau}{r} \qquad \text{...(i)}$$

where

T = Twisting moment (or torque) acting upon the shaft,

J = Polar moment of inertia of the shaft about the axis of rotation,

τ = Torsional shear stress, and

r = Distance from neutral axis to the outer most fibre

= d / 2; where d is the diameter of the shaft.

Atmiya University Rajkot

We know that for round solid shaft, polar moment of inertia,

$$J = \frac{\pi}{32} \times d^4$$

The equation (*i) may now be written as*

$$\frac{T}{\frac{\pi}{32} \times d^4} = \frac{\tau}{\frac{d}{2}} \quad \text{or} \quad T = \frac{\pi}{16} \times \tau \times d^3 \qquad \text{...(ii)}$$

From this equation, we may determine the diameter of round solid shaft (*d).*
We also know that for hollow shaft, polar moment of inertia,

$$J = \frac{\pi}{32}\left[(d_o)^4 - (d_i)^4\right]$$

where *do and di = Outside and inside diameter of the shaft, and r = do / 2.*
Substituting these values in equation (*i), we have*

$$\frac{T}{\frac{\pi}{32}\left[(d_o)^4 - (d_i)^4\right]} = \frac{\tau}{\frac{d_o}{2}} \quad \text{or} \quad T = \frac{\pi}{16} \times \tau \left[\frac{(d_o)^4 - (d_i)^4}{d_o}\right] \qquad \text{...(iii)}$$

Let *k = Ratio of inside diameter and outside diameter of the shaft*

= di / do

Now the equation ***(iii) may be written as***

Atmiya University Rajkot

$$T = \frac{\pi}{16} \times \tau \times \frac{(d_o)^4}{d_o}\left[1 - \left(\frac{d_i}{d_o}\right)^4\right] = \frac{\pi}{16} \times \tau\ (d_o)^3\ (1 - k^4) \qquad \ldots(iv)$$

From the equations ***(iii) or (iv), the outside and inside diameter of a hollow shaft may be*** determined.

It may be noted that

1. The hollow shafts are usually used in marine work. These shafts are stronger per kg of material and they may be forged on a mandrel, thus making the material more homogeneous thanwould be possible for a solid shaft.

When a hollow shaft is to be made equal in strength to a solid shaft, the twisting moment of both the shafts must be same. In other words, for the same material of both the shafts,

$$T = \frac{\pi}{16} \times \tau \left[\frac{(d_o)^4 - (d_i)^4}{d_o}\right] = \frac{\pi}{16} \times \tau \times d^3$$

$$\therefore \quad \frac{(d_o)^4 - (d_i)^4}{d_o} = d^3 \quad \text{or} \quad (d_o)^3\ (1 - k^4) = d^3$$

Atmiya University Rajkot

2. The twisting moment (*T) may be obtained by using the following relation :*
We know that the power transmitted (in watts) by the shaft,

$$P = \frac{2\pi N \times T}{60} \quad \text{or} \quad T = \frac{P \times 60}{2\pi N}$$

where *T = Twisting moment in N-m, and*
N = Speed of the shaft in r.p.m.

3. In case of belt drives, the twisting moment (*T) is given by*

$$T = (T1 - T2)\, R$$

where
T1 and T2 = Tensions in the tight side and slack side of the belt respectively, and
R = Radius of the pulley.

Atmiya University
Rajkot

Example 1

A line shaft rotating at 200 r.p.m. is to transmit 20 kW. The shaft may be assumed to be made of mild steel with an allowable shear stress of 42 MPa. Determine the diameter of the shaft, neglecting the bending moment on the shaft.

Solution.

Given : *N = 200 r.p.m. ; P = 20 kW = 20 × 103 W;* τ *= 42 MPa = 42 N/mm2*

Let *d = Diameter of the shaft.*

We know that torque transmitted by the shaft,

$$T = \frac{P \times 60}{2\pi N} = \frac{20 \times 10^3 \times 60}{2\pi \times 200} = 955 \text{ N-m} = 955 \times 10^3 \text{ N-mm}$$

We also know that torque transmitted by the shaft (*T*),

$$955 \times 10^3 = \frac{\pi}{16} \times \tau \times d^3 = \frac{\pi}{16} \times 42 \times d^3 = 8.25\ d^3$$

$$\therefore \quad d^3 = 955 \times 10^3 / 8.25 = 115\ 733 \text{ or } d = 48.7 \text{ say } 50 \text{ mm Ans.}$$

Atmiya University Rajkot

Example 2.

A solid shaft is transmitting 1 MW at 240 r.p.m. Determine the diameter of the shaft if the maximum torque transmitted exceeds the mean torque by 20%. Take the maximum allowable shear stress as 60 MPa.

Solution.

Given : ***P = 1 MW = 1 × 106 W ; N = 240 r.p.m. ; Tmax = 1.2 Tmean ;***

τ = 60 MPa = 60 N/mm²

Let *d = Diameter of the shaft.*

We know that mean torque transmitted by the shaft,

$$T_{mean} = \frac{P \times 60}{2\pi N} = \frac{1 \times 10^6 \times 60}{2\pi \times 240} = 39\ 784 \text{ N-m} = 39\ 784 \times 10^3 \text{ N-mm}$$

Maximum torque transmitted,

Tmax = 1.2 Tmean = 1.2 × 39 784 × 10 ³= 47 741 × 10³ N-mm

We know that maximum torque transmitted (*Tmax),*

$$47\ 741 \times 10^3 = \frac{\pi}{16} \times \tau \times d^3 = \frac{\pi}{16} \times 60 \times d^3 = 11.78\ d^3$$

$$d^3 = 47\ 741 \times 10^3 / 11.78 = 4053 \times 10^3$$

$$d = 159.4 \text{ say } 160 \text{ mm Ans}$$

Atmiya University Rajkot

Example 3.

Find the diameter of a solid steel shaft to transmit 20 kW at 200 r.p.m. The ultimate shear stress for the steel may be taken as 360 MPa and a factor of safety as 8. If a hollow shaft is to be used in place of the solid shaft, find the inside and outside diameter when the ratio of inside to outside diameters is 0.5.

Solution. Given : $P = 20\ kW = 20 \times 10^3\ W$; $N = 200$ r.p.m. ; $\tau_u = 360\ MPa = 360\ N/mm^2$; $F.S. = 8$; $k = d_i / d_o = 0.5$

We know that the allowable shear stress,

$$\tau = \frac{\tau_u}{F.S.} = \frac{360}{8} = 45\ N/mm^2$$

Diameter of the solid shaft

Let d = *Diameter of the solid shaft.*

We know that torque transmitted by the shaft,

$$T = \frac{P \times 60}{2\pi N} = \frac{20 \times 10^3 \times 60}{2\pi \times 200} = 955\ N\text{-}m = 955 \times 10^3\ N\text{-}mm$$

We also know that torque transmitted by the solid shaft (*T*),

$$955 \times 10^3 = \frac{\pi}{16} \times \tau \times d^3 = \frac{\pi}{16} \times 45 \times d^3 = 8.84\ d^3$$

$$d^3 = 955 \times 10^3 / 8.84 = 108\ 032 \quad \text{or} \quad d = 47.6 \text{ say } 50\ mm \text{ Ans.}$$

Atmiya University Rajkot

Diameter of hollow shaft

Let *di = Inside diameter, and*

do = Outside diameter.

We know that the torque transmitted by the hollow shaft (*T),*

$$955 \times 10^3 = \frac{\pi}{16} \times \tau\,(d_o)^3\,(1 - k^4)$$

$$= \frac{\pi}{16} \times 45\,(d_o)^3\,[1 - (0.5)^4] = 8.3\,(d_o)^3$$

$$(d_o)^3 = 955 \times 10^3 / 8.3 = 115\,060 \quad \text{or} \quad d_o = 48.6 \text{ say } 50 \text{ mm Ans.}$$

$$d_i = 0.5\,d_o = 0.5 \times 50 = 25 \text{ mm Ans.}$$

Atmiya University Rajkot

Shafts Subjected to Bending Moment Only

When the shaft is subjected to a bending moment only, then the maximum stress (tensile or compressive) is given by the bending equation. We know that

$$\frac{M}{I} = \frac{\sigma_b}{y} \qquad ...(i)$$

where *M = Bending moment,*
I = Moment of inertia of cross-sectional area of the shaft about the axis of rotation,
σb = Bending stress, and
y = Distance from neutral axis to the outer-most fibre.

We know that for a round solid shaft, moment of inertia,

$$I = \frac{\pi}{64} \times d^4 \quad \text{and} \quad y = \frac{d}{2}$$

Substituting these values in equation (i), we have

$$\frac{M}{\frac{\pi}{64} \times d^4} = \frac{\sigma_b}{\frac{d}{2}} \quad \text{or} \quad M = \frac{\pi}{32} \times \sigma_b \times d^3$$

Atmiya University Rajkot

From this equation, diameter of the solid shaft (d) may be obtained.
We also know that for a hollow shaft, moment of inertia,

$$I = \frac{\pi}{64}\left[(d_o)^4 - (d_i)^4\right] = \frac{\pi}{64}(d_o)^4\,(1 - k^4) \qquad \text{...(where } k = d_i / d_o)$$

$$y = d_o / 2$$

Again substituting these values in equation ***(i), we have***

$$\frac{M}{\frac{\pi}{64}(d_o)^4\,(1 - k^4)} = \frac{\sigma_b}{\frac{d_o}{2}} \qquad \text{or} \qquad M = \frac{\pi}{32} \times \sigma_b\,(d_o)^3\,(1 - k^4)$$

From this equation, the outside diameter of the shaft (do) may be obtained.

Atmiya University Rajkot

Example 4.

A pair of wheels of a railway wagon carries a load of 50 kN on each axle box, acting at a distance of 100 mm outside the wheel base. The gauge of the rails is 1.4 m. Find the diameter of the axle between the wheels, if the stress is not to exceed 100 MPa.

Solution.

Given : $W = 50\ kN = 50 \times 10^3\ N$; $L = 100\ mm$; $x = 1.4\ m$; $\sigma b = 100\ MPa = 100\ N/mm^2$

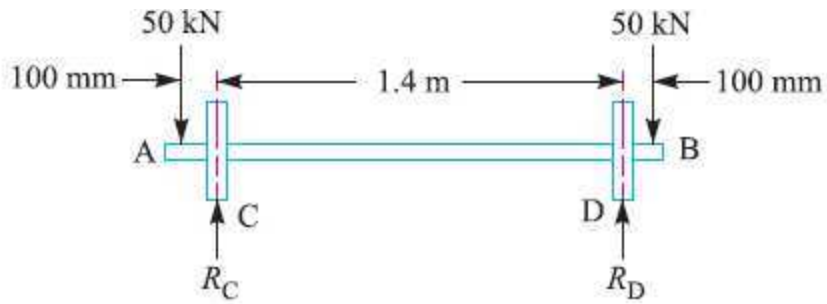

The axle with wheels is shown in Fig. 1.

A little consideration will show that the maximum bending moment acts on the wheels at C and D. Therefore maximum bending moment,

*$M = W.L = 50 \times 10^3 \times 100 = 5 \times 10^6$ N-mm

The maximum B.M. may be obtained as follows :

$RC = RD = 50\ kN = 50 \times 10^3\ N$

B.M. at A, $MA = 0$

B.M. at C, $MC = 50 \times 10^3 \times 100 = 5 \times 10^6$ N-mm

B.M. at D, $MD = 50 \times 10^3 \times 1500 - 50 \times 10^3 \times 1400 = 5 \times 10^6$ N-mm

B.M. at B, $MB = 0$

Ramiya University Rajkot

Let d = Diameter of the axle.
We know that the maximum bending moment (M),

$$5 \times 10^6 = \frac{\pi}{32} \times \sigma_b \times d^3 = \frac{\pi}{32} \times 100 \times d^3 = 9.82\, d^3$$

$$d^3 = 5 \times 10^6 / 9.82 = 0.51 \times 10^6 \text{ or } d = 79.8 \text{ say } 80 \text{ mm}$$ **Ans.**

Atmiya University Rajkot

Shafts Subjected to Combined Twisting Moment and Bending Moment

When the shaft is subjected to combined twisting moment and bending moment, then the shaft must be designed on the basis of the two moments simultaneously. Various theories have been suggested to account for the elastic failure of the materials when they are subjected to various types of combined stresses. The following two theories are important from the subject point of view :

1.Maximum shear stress theory or Guest's theory. It is used for ductile materials such as mild steel.

2.Maximum normal stress theory or Rankine's theory. It is used for brittle materials such as cast iron.

Let τ = Shear stress induced due to twisting moment, and

σb = *Bending stress (tensile or compressive) induced due to bending* moment.

According to maximum shear stress theory, the maximum shear stress in the shaft,

$$\tau_{max} = \frac{1}{2}\sqrt{(\sigma_b)^2 + 4\tau^2}$$

Atmiya University Rajkot

Substituting the values of τ and σb *from Art. 14.9 and Art. 14.10, we have*

$$\tau_{max} = \frac{1}{2}\sqrt{\left(\frac{32M}{\pi d^3}\right)^2 + 4\left(\frac{16T}{\pi d^3}\right)^2} = \frac{16}{\pi d^3}\left[\sqrt{M^2 + T^2}\right]$$

$$\frac{\pi}{16} \times \tau_{max} \times d^3 = \sqrt{M^2 + T^2}$$

The expression $\sqrt{M^2 + T^2}$ is known as ***equivalent twisting moment*** and is denoted by T_e. The equivalent twisting moment may be defined as that twisting moment, which when acting alone, produces the same shear stress (τ) as the actual twisting moment. By limiting the maximum shear stress (τ_{max}) equal to the allowable shear stress (τ) for the material, the equation *(i)* may be written as

$$T_e = \sqrt{M^2 + T^2} = \frac{\pi}{16} \times \tau \times d^3 \qquad \text{...(ii)}$$

From this expression, diameter of the shaft (d) may be evaluated.

Now according to maximum normal stress theory, the maximum normal stress in the shaft,

$$\sigma_{b(max)} = \frac{1}{2}\sigma_b + \frac{1}{2}\sqrt{(\sigma_b)^2 + 4\tau^2} \qquad \text{...(iii)}$$

$$= \frac{1}{2} \times \frac{32M}{\pi d^3} + \frac{1}{2}\sqrt{\left(\frac{32M}{\pi d^3}\right)^2 + 4\left(\frac{16T}{\pi d^3}\right)^2}$$

$$= \frac{32}{\pi d^3}\left[\frac{1}{2}\left(M + \sqrt{M^2 + T^2}\right)\right]$$

or

$$\frac{\pi}{32} \times \sigma_{b\,(max)} \times d^3 = \frac{1}{2}\left[M + \sqrt{M^2 + T^2}\right] \qquad \text{...(iv)}$$

Atmiya University Rajkot

The expression $\frac{1}{2}\left[(M + \sqrt{M^2 + T^2})\right]$ is known as ***equivalent bending moment*** and is denoted by M_e. The equivalent bending moment may be defined as **that moment which when acting alone produces the same tensile or compressive stress (σ_b) as the actual bending moment.** By limiting the maximum normal stress $[\sigma_{b(max)}]$ equal to the allowable bending stress (σ_b), then the equation (*iv*) may be written as

$$M_e = \frac{1}{2}\left[M + \sqrt{M^2 + T^2}\right] = \frac{\pi}{32} \times \sigma_b \times d^3 \qquad \text{...(v)}$$

From this expression, diameter of the shaft (d) may be evaluated.

Notes: 1. In case of a hollow shaft, the equations (*ii*) and (*v*) may be written as

$$T_e = \sqrt{M^2 + T^2} = \frac{\pi}{16} \times \tau\,(d_o)^3\,(1 - k^4)$$

and

$$M_e = \tfrac{1}{2}\left(M + \sqrt{M^2 + T^2}\right) = \frac{\pi}{32} \times \sigma_b\,(d_o)^3\,(1 - k^4)$$

2. It is suggested that diameter of the shaft may be obtained by using both the theories and the larger of the two values is adopted.

Atmiya University Rajkot
Atmiya University Rajkot

Example 5.

A solid circular shaft is subjected to a bending moment of 3000 N-m and a torque of 10 000 N-m. The shaft is made of 45 C 8 steel having ultimate tensile stress of 700 MPa and a ultimate shear stress of 500 MPa. Assuming a factor of safety as 6, determine the diameter of the shaft.

Solution. Given : $M = 3000$ N-m $= 3 \times 10^6$ N-mm ; $T = 10\ 000$ N-m $= 10 \times 10^6$ N-mm ; $\sigma_{tu} = 700$ MPa $= 700$ N/mm^2 ; $\tau_u = 500$ MPa $= 500$ N/mm^2

We know that the allowable tensile stress,

$$\sigma_t \text{ or } \sigma_b = \frac{\sigma_{tu}}{F.S.} = \frac{700}{6} = 116.7 \text{ N/mm}^2$$

and allowable shear stress,

$$\tau = \frac{\tau_u}{F.S.} = \frac{500}{6} = 83.3 \text{ N/mm}^2$$

Let d = Diameter of the shaft in mm.

According to maximum shear stress theory, equivalent twisting moment,

$$T_e = \sqrt{M^2 + T^2} = \sqrt{(3 \times 10^6)^2 + (10 \times 10^6)^2} = 10.44 \times 10^6 \text{ N-mm}$$

We also know that equivalent twisting moment (T_e),

$$10.44 \times 10^6 = \frac{\pi}{16} \times \tau \times d^3 = \frac{\pi}{16} \times 83.3 \times d^3 = 16.36\ d^3$$

$$\therefore \quad d^3 = 10.44 \times 10^6 / 16.36 = 0.636 \times 10^6 \text{ or } d = 86 \text{ mm}$$

Atmiya University Rajkot

According to maximum normal stress theory, equivalent bending moment,

$$M_e = \tfrac{1}{2}\left(M + \sqrt{M^2 + T^2}\right) = \tfrac{1}{2}\,(M + T_e)$$

$$= \tfrac{1}{2}\,(3 \times 10^6 + 10.44 \times 10^6) = 6.72 \times 10^6 \text{ N-mm}$$

We also know that the equivalent bending moment (M_e),

$$6.72 \times 10^6 = \frac{\pi}{32} \times \sigma_b \times d^3 = \frac{\pi}{32} \times 116.7 \times d^3 = 11.46\, d^3$$

$$\therefore \quad d^3 = 6.72 \times 10^6 / 11.46 = 0.586 \times 10^6 \text{ or } d = 83.7 \text{ mm}$$

Taking the larger of the two values, we have

$$d = 86 \text{ say } 90 \text{ mm}$$ Ans.

Atmiya University Rajkot

Example 6.

A shaft supported at the ends in ball bearings carries a straight tooth spur gear at its mid span and is to transmit 7.5 kW at 300 r.p.m. The pitch circle diameter of the gear is 150 mm. The distances between the centre line of bearings and gear are 100 mm each. If the shaft is made of steel and the allowable shear stress is 45 MPa, determine the diameter of the shaft. Show in a sketch how the gear will be mounted on the shaft; also indicate the ends where the bearings will be mounted?

The pressure angle of the gear may be taken as 20°.

Solution. Given : $P = 7.5$ kW $= 7500$ W ; $N = 300$ r.p.m. ; $D = 150$ mm $= 0.15$ m ; $L = 200$ mm $= 0.2$ m ; $\tau = 45$ MPa $= 45$ N/mm^2 ; $\alpha = 20°$

Fig. 14.2 shows a shaft with a gear mounted on the bearings.

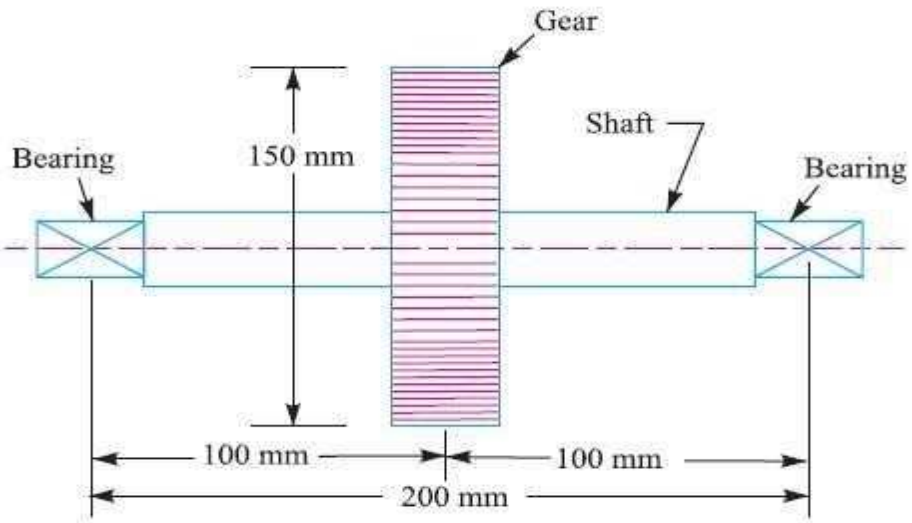

Fig. 14.2

We know that torque transmitted by the shaft,

$$T = \frac{P \times 60}{2\pi N} = \frac{7500 \times 60}{2\pi \times 300} = 238.7 \text{ N-m}$$

∴ Tangential force on the gear,

$$F_t = \frac{2T}{D} = \frac{2 \times 238.7}{0.15} = 3182.7 \text{ N}$$

and the normal load acting on the tooth of the gear,

$$W = \frac{F_t}{\cos\alpha} = \frac{3182.7}{\cos 20^\circ} = \frac{3182.7}{0.9397} = 3387 \text{ N}$$

Atmiya University Rajkot

Since the gear is mounted at the middle of the shaft, therefore maximum bending moment at the centre of the gear,

$$M = \frac{W.L}{4} = \frac{3387 \times 0.2}{4} = 169.4 \text{ N-m}$$

Let d = Diameter of the shaft.

We know that equivalent twisting moment,

$$T_e = \sqrt{M^2 + T^2} = \sqrt{(169.4)^2 + (238.7)^2} = 292.7 \text{ N-m}$$

$$= 292.7 \times 10^3 \text{ N-mm}$$

We also know that equivalent twisting moment (T_e),

$$292.7 \times 10^3 = \frac{\pi}{16} \times \tau \times d^3 = \frac{\pi}{16} \times 45 \times d^3 = 8.84\ d^3$$

∴ $d^3 = 292.7 \times 10^3 / 8.84 = 33 \times 10^3$ or $d = 32$ say 35 mm Ans.

Example 14.7. *A shaft made of mild steel is required to transmit 100 kW at 300 r.p.m. The supported length of the shaft is 3 metres. It carries two pulleys each weighing 1500 N supported at a distance of 1 metre from the ends respectively. Assuming the safe value of stress, determine the diameter of the shaft.*

Solution. Given : $P = 100$ kW $= 100 \times 10^3$ W ; $N = 300$ r.p.m. ; $L = 3$ m ; $W = 1500$ N

We know that the torque transmitted by the shaft,

$$T = \frac{P \times 60}{2\pi N} = \frac{100 \times 10^3 \times 60}{2\pi \times 300} = 3183 \text{ N-m}$$

The shaft carrying the two pulleys is like a simply supported beam as shown in Fig. 14.3. The reaction at each support will be 1500 N, *i.e.*

$$R_A = R_B = 1500 \text{ N}$$

A little consideration will show that the maximum bending moment lies at each pulley *i.e.* at C and D.

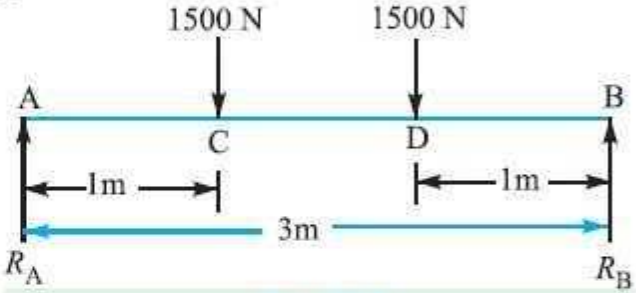

Fig. 14.3

Atmiya University Rajkot

∴ Maximum bending moment,

$$M = 1500 \times 1 = 1500 \text{ N-m}$$

Let d = Diameter of the shaft in mm.

We know that equivalent twisting moment,

$$T_e = \sqrt{M^2 + T^2} = \sqrt{(1500)^2 + (3183)^2} = 3519 \text{ N-m}$$

$$= 3519 \times 10^3 \text{ N-mm}$$

We also know that equivalent twisting moment (T_e),

$$3519 \times 10^3 = \frac{\pi}{16} \times \tau \times d^3 = \frac{\pi}{16} \times 60 \times d^3 = 11.8\, d^3 \quad \text{...(Assuming } \tau = 60 \text{ N/mm}^2\text{)}$$

∴ $d^3 = 3519 \times 10^3 / 11.8 = 298 \times 10^3$ or $d = 66.8$ say 70 mm **Ans.**

Example 8. *A line shaft is driven by means of a motor placed vertically below it. The pulley on the line shaft is 1.5 metre in diameter and has belt tensions 5.4 kN and 1.8 kN on the tight side and slack side of the belt respectively. Both these tensions may be assumed to be vertical. If the pulley be overhang from the shaft, the distance of the centre line of the pulley from the centre line of the bearing being 400 mm, find the diameter of the shaft. Assuming maximum allowable shear stress of 42 MPa.*

Solution .

Given : *D = 1.5 m or R = 0.75 m; T1 = 5.4 kN = 5400 N ; T2 = 1.8 kN = 1800 N ;*
L = 400 mm ; τ = 42 MPa = 42 N/mm2

A line shaft with a pulley is shown in Fig 14.4.

We know that torque transmitted by the shaft,

$$T = (T1 - T2)\ R = (5400 - 1800)\ 0.75 = 2700\ N\text{-}m$$

$$= 2700 \times 103\ \text{N-mm}$$

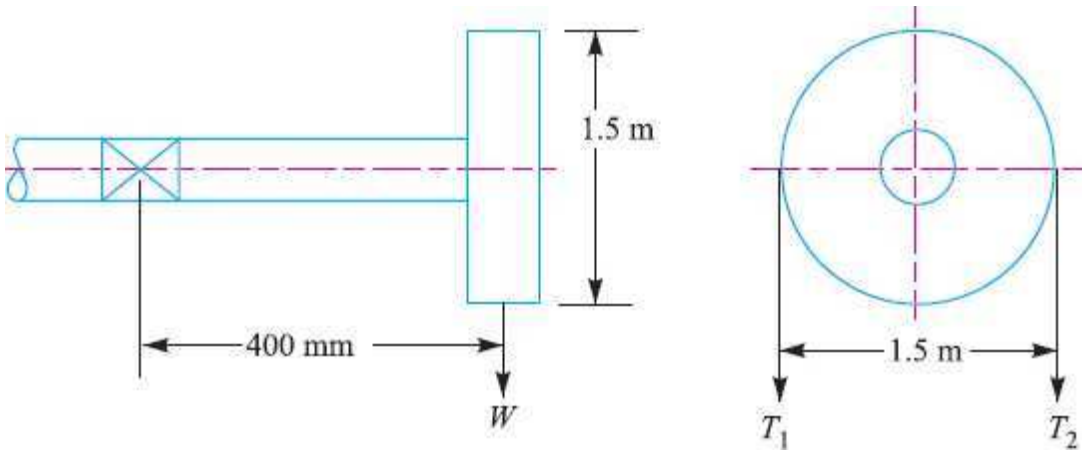

Neglecting the weight of shaft, total vertical load acting on the pulley,

$$W = T_1 + T_2 = 5400 + 1800 = 7200 \text{ N}$$

$\therefore$ Bending moment, $M = W \times L = 7200 \times 400 = 2880 \times 10^3$ N-mm

Let d = Diameter of the shaft in mm.

We know that the equivalent twisting moment,

$$T_e = \sqrt{M^2 + T^2} = \sqrt{(2880 \times 10^3)^2 + (2700 \times 10^3)^2}$$

$$= 3950 \times 10^3 \text{ N-mm}$$

Atmiya University Rajkot

We also know that equivalent twisting moment (T_e),

$$3950 \times 10^3 = \frac{\pi}{16} \times \tau \times d^3 = \frac{\pi}{16} \times 42 \times d^3 = 8.25\, d^3$$

$\therefore$ $d^3 = 3950 \times 10^3/8.25 = 479 \times 10^3$ or $d = 78$ say 80 mm **Ans.**

Example 14.9. *A shaft is supported by two bearings placed 1 m apart. A 600 mm diameter pulley is mounted at a distance of 300 mm to the right of left hand bearing and this drives a pulley directly below it with the help of belt having maximum tension of 2.25 kN. Another pulley 400 mm diameter is placed 200 mm to the left of right hand bearing and is driven with the help of electric motor and belt, which is placed horizontally to the right. The angle of contact for both the pulleys is 180° and μ = 0.24. Determine the suitable diameter for a solid shaft, allowing working stress of 63 MPa in tension and 42 MPa in shear for the material of shaft. Assume that the torque on one pulley is equal to that on the other pulley.*

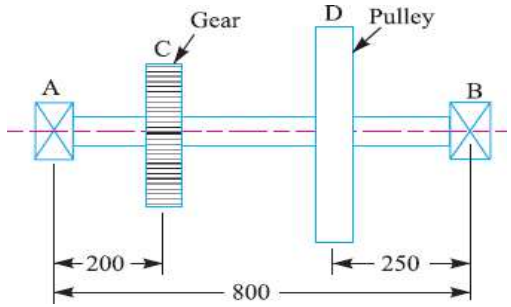

Solution. Given : $AB = 1$ m ; $D_C = 600$ mm or $R_C = 300$ mm = 0.3 m ; $AC = 300$ mm = 0.3 m ; $T_1 = 2.25$ kN = 2250 N ; $D_D = 400$ mm or $R_D = 200$ mm = 0.2 m ; $BD = 200$ mm = 0.2 m ; $\theta = 180° = \pi$ rad ; $\mu = 0.24$; $\sigma_b = 63$ MPa = 63 N/mm² ; $\tau = 42$ MPa = 42 N/mm²

The space diagram of the shaft is shown in Fig. 14.5 (*a*).

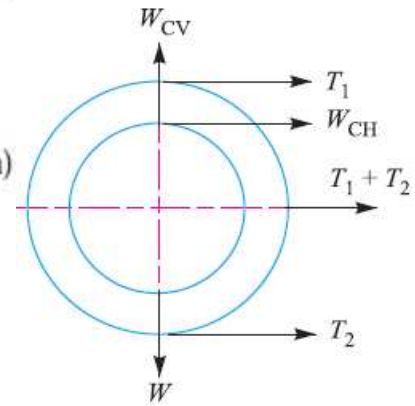

Atmiya University Rajkot

Let T_1 = Tension in the tight side of the belt on pulley C = 2250 N ...(Given)

T_2 = Tension in the slack side of the belt on pulley C.

We know that

$$2.3 \log\left(\frac{T_1}{T_2}\right) = \mu.\theta = 0.24 \times \pi = 0.754$$

$$\therefore \quad \log\left(\frac{T_1}{T_2}\right) = \frac{0.754}{2.3} = 0.3278 \quad \text{or} \quad \frac{T_1}{T_2} = 2.127 \qquad \text{...(Taking antilog of 0.3278)}$$

and $$T_2 = \frac{T_1}{2.127} = \frac{2250}{2.127} = 1058 \text{ N}$$

∴ Vertical load acting on the shaft at C,

$$W_C = T_1 + T_2 = 2250 + 1058 = 3308 \text{ N}$$

and vertical load on the shaft at D

$$= 0$$

The vertical load diagram is shown in Fig. 14.5 (*c*).

We know that torque acting on the pulley *C*,

$$T = (T_1 - T_2)\, R_C = (2250 - 1058)\, 0.3 = 357.6 \text{ N-m}$$

The torque diagram is shown in Fig. 14.5 (*b*).

Let T_3 = Tension in the tight side of the belt on pulley *D*, and

T_4 = Tension in the slack side of the belt on pulley *D*.

Since the torque on both the pulleys (*i.e.* *C* and *D*) is same, therefore

$$(T_3 - T_4)\, R_D = T = 357.6 \text{ N-m} \quad \text{or} \quad T_3 - T_4 = \frac{357.6}{R_D} = \frac{357.6}{0.2} = 1788 \text{ N} \qquad \ldots(i)$$

Atmiya University Rajkot

We know that

$$= \frac{T_3}{T_4} = \frac{T_1}{T_2} = 2.127 \quad \text{or} \quad T_3 = 2.127\, T_4 \qquad \ldots(ii)$$

From equations (*i*) and (*ii*), we find that

$$T_3 = 3376 \text{ N, and } T_4 = 1588 \text{ N}$$

∴ Horizontal load acting on the shaft at *D*,

$$W_D = T_3 + T_4 = 3376 + 1588 = 4964 \text{ N}$$

and horizontal load on the shaft at $C = 0$

The horizontal load diagram is shown in Fig. 14.5 (*d*).

Now let us find the maximum bending moment for vertical and horizontal loading.

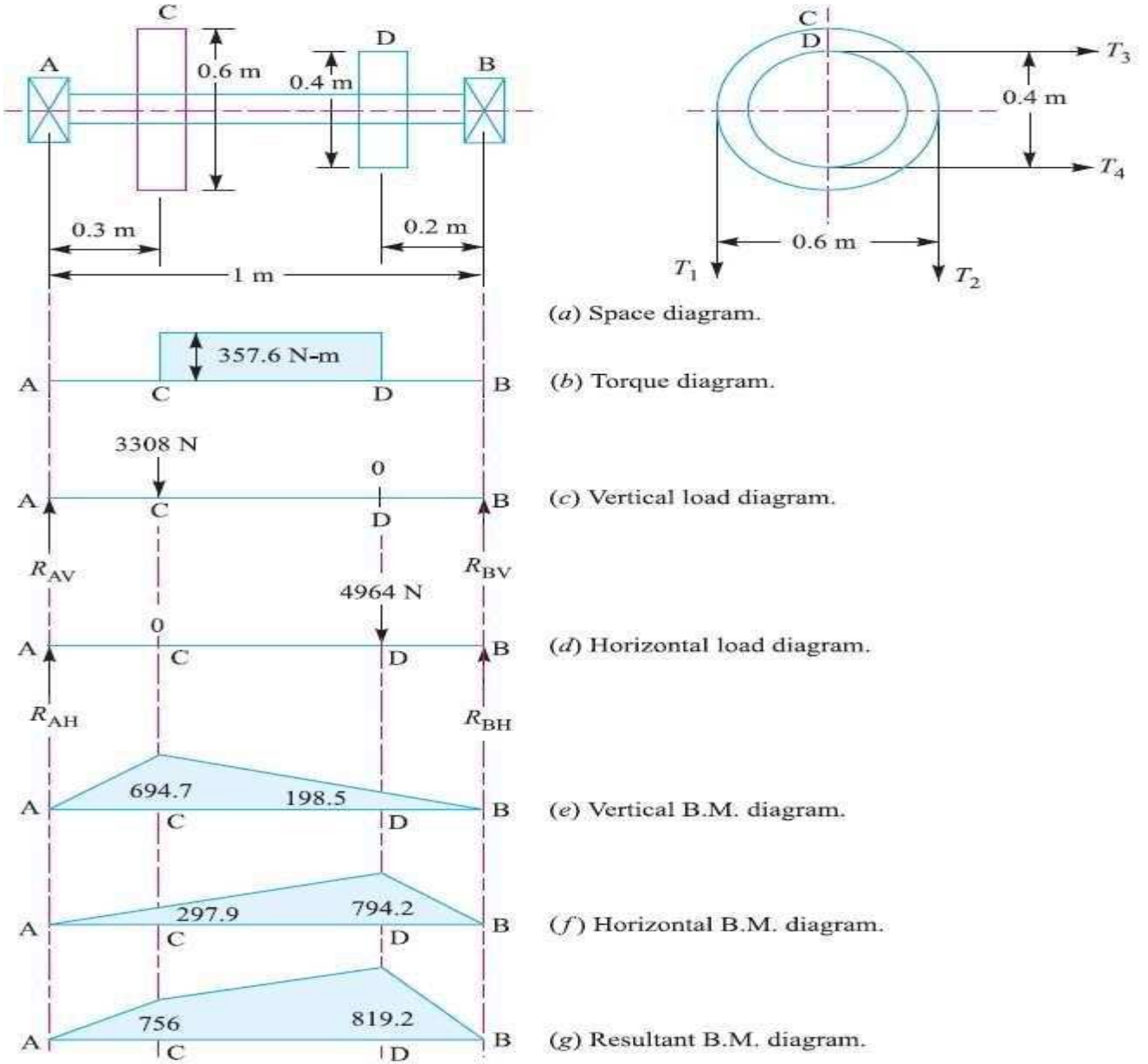

Atmiya University Rajkot

First of all, considering the vertical loading at C. Let R_{AV} and R_{BV} be the reactions at the bearings A and B respectively. We know that

$$R_{AV} + R_{BV} = 3308 \text{ N}$$

Taking moments about A,

$$R_{BV} \times 1 = 3308 \times 0.3 \quad \text{or} \quad R_{BV} = 992.4 \text{ N}$$

and

$$R_{AV} = 3308 - 992.4 = 2315.6 \text{ N}$$

We know that B.M. at A and B,

$$M_{AV} = M_{BV} = 0$$

B.M. at C, $\quad M_{CV} = R_{AV} \times 0.3 = 2315.6 \times 0.3 = 694.7$ N-m

B.M. at D, $\quad M_{DV} = R_{BV} \times 0.2 = 992.4 \times 0.2 = 198.5$ N-m

The bending moment diagram for vertical loading in shown in Fig. 14.5 (e).

Atmiya University Rajkot

Now considering horizontal loading at D. Let R_{AH} and R_{BH} be the reactions at the bearings A and B respectively. We know that

$$R_{AH} + R_{BH} = 4964 \text{ N}$$

Taking moments about A,

$$R_{BH} \times 1 = 4964 \times 0.8 \quad \text{or} \quad R_{BH} = 3971 \text{ N}$$

and

$$R_{AH} = 4964 - 3971 = 993 \text{ N}$$

We know that B.M. at A and B,

$$M_{AH} = M_{BH} = 0$$

B.M. at C, $\quad M_{CH} = R_{AH} \times 0.3 = 993 \times 0.3 = 297.9$ N-m

B.M. at D, $\quad M_{DH} = R_{BH} \times 0.2 = 3971 \times 0.2 = 794.2$ N-m

The bending moment diagram for horizontal loading is shown in Fig. 14.5 (f).

Resultant B.M. at C,

$$M_C = \sqrt{(M_{CV})^2 + (M_{CH})^2} = \sqrt{(694.7)^2 + (297.9)^2} = 756 \text{ N-m}$$

and resultant B.M. at D,

$$M_D = \sqrt{(M_{DV})^2 + (M_{DH})^2} = \sqrt{(198.5)^2 + (794.2)^2} = 819.2 \text{ N-m}$$

The resultant bending moment diagram is shown in Fig. 14.5 (g).

We see that bending moment is maximum at D.

$\therefore$ Maximum bending moment,

$$M = M_D = 819.2 \text{ N-m}$$

Let d = Diameter of the shaft.

We know that equivalent twisting moment,

$$T_e = \sqrt{M^2 + T^2} = \sqrt{(819.2)^2 + (357.6)^2} = 894 \text{ N-m}$$

$$= 894 \times 10^3 \text{ N-mm}$$

We also know that equivalent twisting moment (T_e),

$$894 \times 10^3 = \frac{\pi}{16} \times \tau \times d^3 = \frac{\pi}{16} \times 42 \times d^3 = 8.25\, d^3$$

$$\therefore \quad d^3 = 894 \times 10^3 / 8.25 = 108 \times 10^3 \text{ or } d = 47.6 \text{ mm}$$

Again we know that equivalent bending moment,

$$M_e = \tfrac{1}{2}\left(M + \sqrt{M^2 + T^2}\right) = \tfrac{1}{2}(M + T_e)$$

$$= \tfrac{1}{2}(819.2 + 894) = 856.6 \text{ N-m} = 856.6 \times 10^3 \text{ N-mm}$$

Atmiya University Rajkot

We also know that equivalent bending moment (M_e),

$$856.6 \times 10^3 = \frac{\pi}{32} \times \sigma_b \times d^3 = \frac{\pi}{32} \times 63 \times d^3 = 6.2\, d^3$$

$$\therefore \qquad d^3 = 856.6 \times 10^3/6.2 = 138.2 \times 10^3 \quad \text{or} \quad d = 51.7 \text{ mm}$$

Taking larger of the two values, we have

$$d = 51.7 \text{ say } 55 \text{ mm}$$ **Ans.**

Atmiya University Rajkot

Shafts Subjected to Fluctuating Loads

In the previous articles we have assumed that the shaft is subjected to constant torque and bending moment. But in actual practice, the shafts are subjected to fluctuating torque and bending moments. In order to design such shafts like line shafts and counter shafts, the combined shock and fatigue factors must be taken into account for the computed *twisting moment* (*T) and bending moment (M).* Thus for a shaftsubjected to combined bending and torsion, the equivalent twisting moment,

$$T_e = \sqrt{(K_m \times M)^2 + (K_t + T)^2}$$

and equivalent bending moment,

$$M_e = \frac{1}{2}\left[K_m \times M + \sqrt{(K_m \times M)^2 + (K_t \times T)^2}\right]$$

where *Km = Combined shock and fatigue factor for bending, and*
Kt = Combined shock and fatigue factor for torsion.

The following table shows the recommended values for *Km and Kt.*

Table 14.2. Recommended values for K_m and K_t

Nature of load	K_m	K_t
1. Stationary shafts		
(*a*) Gradually applied load	1.0	1.0
(*b*) Suddenly applied load	1.5 to 2.0	1.5 to 2.0
2. Rotating shafts		
(*a*) Gradually applied or steady load	1.5	1.0
(*b*) Suddenly applied load with minor shocks only	1.5 to 2.0	1.5 to 2.0
(*c*) Suddenly applied load with heavy shocks	2.0 to 3.0	1.5 to 3.0

Atmiya University Rajkot

Example 14.12. *A mild steel shaft transmits 20 kW at 200 r.p.m. It carries a central load of 900 N and is simply supported between the bearings 2.5 metres apart. Determine the size of the shaft, if the allowable shear stress is 42 MPa and the maximum tensile or compressive stress is not to exceed 56 MPa. What size of the shaft will be required, if it is subjected to gradually applied loads?*

Solution. Given : $P = 20$ kW $= 20 \times 10^3$ W ; $N = 200$ r.p.m. ; $W = 900$ N ; $L = 2.5$ m ; $\tau = 42$ MPa $= 42$ N/mm^2 ; $\sigma_b = 56$ MPa $= 56$ N/mm^2

Size of the shaft

Let d = Diameter of the shaft, in mm.

We know that torque transmitted by the shaft,

$$T = \frac{P \times 60}{2\pi N} = \frac{20 \times 10^3 \times 60}{2\pi \times 200} = 955 \text{ N-m} = 955 \times 10^3 \text{ N-mm}$$

and maximum bending moment of a simply supported shaft carrying a central load,

$$M = \frac{W \times L}{4} = \frac{900 \times 2.5}{4} = 562.5 \text{ N-m} = 562.5 \times 10^3 \text{ N-mm}$$

We know that the equivalent twisting moment,

$$T_e = \sqrt{M^2 + T^2} = \sqrt{(562.5 \times 10^3)^2 + (955 \times 10^3)^2}$$
$$= 1108 \times 10^3 \text{ N-mm}$$

We also know that equivalent twisting moment (T_e),

$$1108 \times 10^3 = \frac{\pi}{16} \times \tau \times d^3 = \frac{\pi}{16} \times 42 \times d^3 = 8.25\ d^3$$

$$\therefore \quad d^3 = 1108 \times 10^3 / 8.25 = 134.3 \times 10^3 \text{ or } d = 51.2 \text{ mm}$$

Atmiya University Rajkot

We know that the equivalent bending moment,

$$M_e = \tfrac{1}{2}\left[M + \sqrt{M^2 + T^2}\right] = \tfrac{1}{2}\,(M + T_e)$$

$$= \tfrac{1}{2}\,(562.5 \times 10^3 + 1108 \times 10^3) = 835.25 \times 10^3 \text{ N-mm}$$

We also know that equivalent bending moment (M_e),

$$835.25 \times 10^3 = \frac{\pi}{32} \times \sigma_b \times d^3 = \frac{\pi}{32} \times 56 \times d^3 = 5.5\, d^3$$

$$\therefore \qquad d^3 = 835.25 \times 10^3 / 5.5 = 152 \times 10^3 \text{ or } d = 53.4 \text{ mm}$$

Taking the larger of the two values, we have

$$d = 53.4 \text{ say } 55 \text{ mm}$$ Ans.

Atmiya University Rajkot

Size of the shaft when subjected to gradually applied load

Let d = Diameter of the shaft.

From Table 14.2, for rotating shafts with gradually applied loads,

$$K_m = 1.5 \text{ and } K_t = 1$$

We know that equivalent twisting moment,

$$T_e = \sqrt{(K_m \times M)^2 + (K_t \times T)^2}$$

$$= \sqrt{(1.5 \times 562.5 \times 10^3)^2 + (1 \times 955 \times 10^3)^2} = 1274 \times 10^3 \text{ N-mm}$$

We also know that equivalent twisting moment (T_e),

$$1274 \times 10^3 = \frac{\pi}{16} \times \tau \times d^3 = \frac{\pi}{16} \times 42 \times d^3 = 8.25\, d^3$$

$$\therefore \quad d^3 = 1274 \times 10^3 / 8.25 = 154.6 \times 10^3 \text{ or } d = 53.6 \text{ mm}$$

We know that the equivalent bending moment,

$$M_e = \tfrac{1}{2}\left[K_m \times M + \sqrt{(K_m \times M)^2 + (K_t \times T)^2}\right] = \tfrac{1}{2}\left[K_m \times M + T_e\right]$$

$$= \tfrac{1}{2}\left[1.5 \times 562.5 \times 10^3 + 1274 \times 10^3\right] = 1059 \times 10^3 \text{ N-mm}$$

We also know that equivalent bending moment (M_e),

$$1059 \times 10^3 = \frac{\pi}{32} \times \sigma_b \times d^3 = \frac{\pi}{32} \times 56 \times d^3 = 5.5\, d^3$$

$$\therefore \quad d^3 = 1059 \times 10^3 / 5.5 = 192.5 \times 10^3 = 57.7 \text{ mm}$$

Taking the larger of the two values, we have

$$d = 57.7 \text{ say } 60 \text{ mm}$$ **Ans.**

Atmiya University Rajkot

Example 14.13. *Design a shaft to transmit power from an electric motor to a lathe head stock through a pulley by means of a belt drive. The pulley weighs 200 N and is located at 300 mm from the centre of the bearing. The diameter of the pulley is 200 mm and the maximum power transmitted is 1 kW at 120 r.p.m. The angle of lap of the belt is 180° and coefficient of friction between the belt and the pulley is 0.3. The shock and fatigue factors for bending and twisting are 1.5 and 2.0 respectively. The allowable shear stress in the shaft may be taken as 35 MPa.*

Solution. Given : $W = 200$ N ; $L = 300$ mm ; $D = 200$ mm or $R = 100$ mm ; $P = 1$ kW $= 1000$ W ; $N = 120$ r.p.m. ; $\theta = 180° = \pi$ rad ; $\mu = 0.3$; $K_m = 1.5$; $K_t = 2$; $\tau = 35$ MPa $= 35$ N/mm^2

The shaft with pulley is shown in Fig. 14.9.

We know that torque transmitted by the shaft,

$$T = \frac{P \times 60}{2\pi N} = \frac{1000 \times 60}{2\pi \times 120} = 79.6 \text{ N-m} = 79.6 \times 10^3 \text{ N-mm}$$

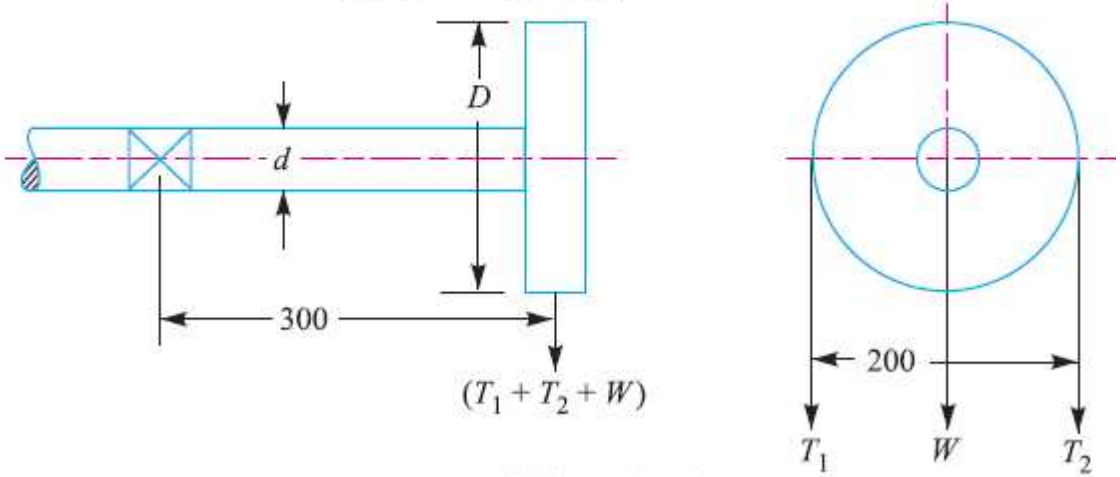

All dimensions in mm.

Atmiya University Rajkot

Let T_1 and T_2 = Tensions in the tight side and slack side of the belt respectively in newtons.

∴ Torque transmitted (T),

$$79.6 \times 10^3 = (T_1 - T_2)\, R = (T_1 - T_2)\, 100$$

$$\therefore \quad T_1 - T_2 = 79.6 \times 10^3 / 100 = 796 \text{ N} \qquad \text{...(i)}$$

We know that

$$2.3 \log\left(\frac{T_1}{T_2}\right) = \mu.\theta = 0.3\,\pi = 0.9426$$

$$\therefore \quad \log\left(\frac{T_1}{T_2}\right) = \frac{0.9426}{2.3} = 0.4098 \text{ or } \frac{T_1}{T_2} = 2.57 \qquad \text{...(ii)}$$

...(Taking antilog of 0.4098)

From equations (*i*) and (*ii*), we get,

$$T_1 = 1303 \text{ N, and } T_2 = 507 \text{ N}$$

We know that the total vertical load acting on the pulley,

$$W_T = T_1 + T_2 + W = 1303 + 507 + 200 = 2010 \text{ N}$$

∴ Bending moment acting on the shaft,

$$M = W_T \times L = 2010 \times 300 = 603 \times 10^3 \text{ N-mm}$$

Let d = Diameter of the shaft.

We know that equivalent twisting moment,

$$T_e = \sqrt{(K_m \times M)^2 + (K_t + T)^2}$$

$$= \sqrt{(1.5 \times 603 \times 10^3)^2 + (2 \times 79.6 \times 10^3)^2} = 918 \times 10^3 \text{ N-mm}$$

We also know that equivalent twisting moment (T_e),

$$918 \times 10^3 = \frac{\pi}{16} \times \tau \times d^3 = \frac{\pi}{16} \times 35 \times d^3 = 6.87\, d^3$$

$$\therefore \quad d^3 = 918 \times 10^3 / 6.87 = 133.6 \times 10^3 \text{ or } d = 51.1 \text{ say } 55 \text{ mm}$$ **Ans.**

Atmiya University Rajkot

Shafts Subjected to Axial Load in addition to Combined Torsion and Bending Loads

When the shaft is subjected to an axial load (F) in addition to torsion and bending loads as in propeller shafts of ships and shafts for driving worm gears, then the stress due to axial load must be added to the bending stress (σ_b). We know that bending equation is

$$\frac{M}{I} = \frac{\sigma_b}{y} \quad \text{or} \quad \sigma_b = \frac{M.y}{I} = \frac{M \times d/2}{\frac{\pi}{64} \times d^4} = \frac{32M}{\pi d^3}$$

and stress due to axial load

$$= \frac{F}{\frac{\pi}{4} \times d^2} = \frac{4F}{\pi d^2} \qquad \text{...(For round solid shaft)}$$

$$= \frac{F}{\frac{\pi}{4}\left[(d_o)^2 - (d_i)^2\right]} = \frac{4F}{\pi\left[(d_o)^2 - (d_i)^2\right]} \qquad \text{...(For hollow shaft)}$$

$$= \frac{F}{\pi\,(d_o)^2\,(1 - k^2)} \qquad \text{... } (\because k = d_i/d_o)$$

$\therefore$ Resultant stress (tensile or compressive) for solid shaft,

$$\sigma_1 = \frac{32M}{\pi d^3} + \frac{4F}{\pi d^2} = \frac{32}{\pi d^3}\left(M + \frac{F \times d}{8}\right) \qquad \text{...(1)}$$

$$= \frac{32M_1}{\pi d^3} \qquad \text{...}\left(\text{Substituting } M_1 = M + \frac{F \times d}{8}\right)$$

In case of a hollow shaft, the resultant stress,

$$\sigma_1 = \frac{32\,M}{\pi\,(d_o)^3\,(1-k^4)} + \frac{4\,F}{\pi\,(d_o)^2\,(1-k^2)}$$

$$= \frac{32}{\pi\,(d_o)^3\,(1-k^4)}\left[M + \frac{F\,d_o\,(1+k^2)}{8}\right] = \frac{32\,M_1}{\pi\,(d_o)^3\,(1-k^4)}$$

$$\ldots\left[\text{Substituting for hollow shaft, } M_1 = M + \frac{F\,d_o\,(1+k^2)}{8}\right]$$

In case of long shafts (slender shafts) subjected to compressive loads, a factor known as ***column factor*** (α) must be introduced to take the column effect into account.

$\therefore$ Stress due to the compressive load,

$$\sigma_c = \frac{\alpha \times 4\,F}{\pi\,d^2} \qquad \ldots(\text{For round solid shaft})$$

Atmiya University Rajkot

$$= \frac{\alpha \times 4F}{\pi (d_o)^2 \ (1 - k^2)}$$ ...(For hollow shaft)

The value of column factor (α) for compressive loads* may be obtained from the following relation :

Column factor, $$\alpha = \frac{1}{1 - 0.0044 \ (L / K)}$$

This expression is used when the slenderness ratio (L / K) is less than 115. When the slenderness ratio (L / K) is more than 115, then the value of column factor may be obtained from the following relation :

**Column factor, $$\alpha = \frac{\sigma_y \ (L / K)^2}{C \pi^2 \ E}$$

Atmiya University Rajkot

where L = Length of shaft between the bearings,

K = Least radius of gyration,

σ_y = Compressive yield point stress of shaft material, and

C = Coefficient in Euler's formula depending upon the end conditions.

The following are the different values of C depending upon the end conditions.

C = 1, for hinged ends,

= 2.25, for fixed ends,

= 1.6, for ends that are partly restrained as in bearings.

Note: In general, for a hollow shaft subjected to fluctuating torsional and bending load, along with an axial load, the equations for equivalent twisting moment (T_e) and equivalent bending moment (M_e) may be written as

$$T_e = \sqrt{\left[K_m \times M + \frac{\alpha\, F\, d_o\, (1+k^2)}{8}\right]^2 + (K_t \times T)^2}$$

$$= \frac{\pi}{16} \times \tau\, (d_o)^3\, (1-k^4)$$

and

$$M_e = \frac{1}{2}\left[K_m \times M + \frac{\alpha F d_o\, (1+k^2)}{8} + \sqrt{\left\{K_m \times M + \frac{\alpha F d_o\, (1+k^2)}{8}\right\}^2 + (K_t \times T)^2}\right]$$

$$= \frac{\pi}{32} \times \sigma_b\, (d_o)^3\, (1-k^4)$$

It may be noted that for a solid shaft, $k = 0$ and $d_0 = d$. When the shaft carries no axial load, then $F = 0$ and when the shaft carries axial tensile load, then $\alpha = 1$.

Atmiya University Rajkot

Example 14.18. *A hollow shaft is subjected to a maximum torque of 1.5 kN-m and a maximum bending moment of 3 kN-m. It is subjected, at the same time, to an axial load of 10 kN. Assume that the load is applied gradually and the ratio of the inner diameter to the outer diameter is 0.5. If the outer diameter of the shaft is 80 mm, find the shear stress induced in the shaft.*

Solution. Given : $T = 1.5$ kN-m $= 1.5 \times 10^3$ N-m ; $M = 3$ kN-m $= 3 \times 10^3$ N-m ; $F = 10$ kN $= 10 \times 10^3$ N ; $k = d_i / d_o = 0.5$; $d_o = 80$ mm $= 0.08$ m

Let τ = Shear stress induced in the shaft.

Since the load is applied gradually, therefore from Table 14.2, we find that

$$K_m = 1.5 \text{ ; and } K_t = 1.0$$

We know that the equivalent twisting moment for a hollow shaft,

Atmiya University Rajkot

$$T_e = \sqrt{\left[K_m \times M + \frac{\alpha F d_o (1 + k^2)}{8}\right]^2 + (K_t \times T)^2}$$

$$= \sqrt{\left[1.5 \times 3 \times 10^3 + \frac{1 \times 10 \times 10^3 \times 0.08 (1 + 0.5^2)}{8}\right]^2 + (1 \times 1.5 \times 10^3)^2}$$

... ($\because$ $\alpha = 1$, for axial tensile loading)

$$= \sqrt{(4500 + 125)^2 + (1500)^2} = 4862 \text{ N-m} = 4862 \times 10^3 \text{ N-mm}$$

We also know that the equivalent twisting moment for a hollow shaft (T_e),

$$4862 \times 10^3 = \frac{\pi}{16} \times \tau (d_o)^3 (1 - k^4) = \frac{\pi}{16} \times \tau (80)^3 (1 - 0.5^4) = 94\,260\ \tau$$

$\therefore$ $\tau = 4862 \times 10^3 / 94\,260 = 51.6$ N/mm^2 = 51.6 MPa **Ans.**

Example 14.19. *A hollow shaft of 0.5 m outside diameter and 0.3 m inside diameter is used to drive a propeller of a marine vessel. The shaft is mounted on bearings 6 metre apart and it transmits 5600 kW at 150 r.p.m. The maximum axial propeller thrust is 500 kN and the shaft weighs 70 kN. Determine :*

1. *The maximum shear stress developed in the shaft, and*
2. *The angular twist between the bearings.*

Solution. Given : $d_o = 0.5$ m ; $d_i = 0.3$ m ; $P = 5600$ kW $= 5600 \times 10^3$ W ; $L = 6$ m ; $N = 150$ r.p.m. ; $F = 500$ kN $= 500 \times 10^3$ N ; $W = 70$ kN $= 70 \times 10^3$ N

Atmiya University Rajkot

1. *Maximum shear stress developed in the shaft*

Let τ = Maximum shear stress developed in the shaft.

We know that the torque transmitted by the shaft,

$$T = \frac{P \times 60}{2\pi N} = \frac{5600 \times 10^3 \times 60}{2\pi \times 150} = 356\ 460 \text{ N-m}$$

and the maximum bending moment,

$$M = \frac{W \times L}{8} = \frac{70 \times 10^3 \times 6}{8} = 52\ 500 \text{ N-m}$$

Now let us find out the column factor α. We know that least radius of gyration,

$$K = \sqrt{\frac{I}{A}} = \sqrt{\frac{\frac{\pi}{64}\left[(d_o)^4 - (d_i)^4\right]}{\frac{\pi}{4}\left[(d_o)^2 - (d_i)^2\right]}}$$

$$= \sqrt{\frac{[(d_o)^2 + (d_i)^2]\,[(d_o)^2 - (d_i)^2]}{16\,[(d_o)^2 - (d_i)^2]}}$$

$$= \frac{1}{4}\sqrt{(d_o)^2 + (d_i)^2} = \frac{1}{4}\sqrt{(0.5)^2 + (0.3)^2} = 0.1458 \text{ m}$$

∴ Slenderness ratio,

$$L / K = 6 / 0.1458 = 41.15$$

and column factor,

$$\alpha = \frac{1}{1 - 0.0044\left(\frac{L}{K}\right)} \qquad \ldots\left(\because \frac{L}{K} < 115\right)$$

$$= \frac{1}{1 - 0.0044 \times 41.15} = \frac{1}{1 - 0.18} = 1.22$$

Atmiya University Rajkot

Assuming that the load is applied gradually, therefore from Table 14.2, we find that

$$K_m = 1.5 \text{ and } K_t = 1.0$$

Also $$k = d_i / d_o = 0.3 / 0.5 = 0.6$$

We know that the equivalent twisting moment for a hollow shaft,

$$T_e = \sqrt{\left[K_m \times M + \frac{\alpha F d_o (1 + k^2)}{8}\right]^2 + (K_t \times T)^2}$$

$$= \sqrt{\left[1.5 \times 52\,500 + \frac{1.22 \times 500 \times 10^3 \times 0.5\ (1 + 0.6^2)}{8}\right]^2 + (1 \times 356\,460)^2}$$

$$= \sqrt{(78\,750 + 51\,850)^2 + (356\,460)^2} = 380 \times 10^3 \text{ N-m}$$

Atmiya University Rajkot

We also know that the equivalent twisting moment for a hollow shaft (T_e),

$$380 \times 10^3 = \frac{\pi}{16} \times \tau\ (d_o)^3\ (1 - k^4) = \frac{\pi}{16} \times \tau\ (0.5)^3\ [1 - (0.6)^4] = 0.02\ \tau$$

$\therefore$ $$\tau = 380 \times 10^3 / 0.02 = 19 \times 10^6 \text{ N/m}^2 = 19 \text{ MPa}$$ Ans.

2. *Angular twist between the bearings*

Let θ = Angular twist between the bearings in radians.

We know that the polar moment of inertia for a hollow shaft,

$$J = \frac{\pi}{32}[(d_o)^4 - (d_i)^4] = \frac{\pi}{32}[(0.5)^4 - (0.3)^4] = 0.005\ 34\ \text{m}^4$$

From the torsion equation,

$$\frac{T}{J} = \frac{G \times \theta}{L}, \text{ we have}$$

$$\theta = \frac{T \times L}{G \times J} = \frac{356\ 460 \times 6}{84 \times 10^9 \times 0.00\ 534} = 0.0048 \text{ rad}$$

... (Taking $G = 84$ GPa $= 84 \times 10^9$ N/m^2)

$$= 0.0048 \times \frac{180}{\pi} = 0.275° \text{ Ans.}$$

Atmiya University Rajkot

Design of Shafts on the basis of Rigidity

1. *Torsional rigidity.* The torsional rigidity is important in the case of camshaft of an I.C. engine where the timing of the valves would be effected. The permissible amount of twist should not exceed 0.25° per metre length of such shafts. For line shafts or transmission shafts, deflections 2.5 to 3 degree per metre length may be used as limiting value. The widely used deflection for the shafts is limited to 1 degree in a length equal to twenty times the diameter of the shaft.

The torsional deflection may be obtained by using the torsion equation,

$$\frac{T}{J} = \frac{G.\theta}{L} \quad \text{or} \quad \theta = \frac{T.L}{J.G}$$

where θ = Torsional deflection or angle of twist in radians,

T = Twisting moment or torque on the shaft,

J = Polar moment of inertia of the cross-sectional area about the axis of rotation,

$$= \frac{\pi}{32} \times d^4 \quad \text{...(For solid shaft)}$$

$$= \frac{\pi}{32}\left[(d_o)^4 - (d_i)^4\right] \quad \text{...(For hollow shaft)}$$

G = Modulus of rigidity for the shaft material, and

L = Length of the shaft.

2. *Lateral rigidity.* It is important in case of transmission shafting and shafts running at high speed, where small lateral deflection would cause huge out-of-balance forces. The lateral rigidity is also important for maintaining proper bearing clearances and for correct gear teeth alignment. If the shaft is of uniform cross-section, then the lateral deflection of a shaft may be obtained by using the deflection formulae as in Strength of Materials. But when the shaft is of variable cross-section, then the lateral deflection may be determined from the fundamental equation for the elastic curve of a beam, *i.e.*

$$\frac{d^2 y}{dx^2} = \frac{M}{EI}$$

Atmiya University Rajkot

Example 14.21. *A steel spindle transmits 4 kW at 800 r.p.m. The angular deflection should not exceed 0.25° per metre of the spindle. If the modulus of rigidity for the material of the spindle is 84 GPa, find the diameter of the spindle and the shear stress induced in the spindle.*

Solution. Given : $P = 4$ kW $= 4000$ W ; $N = 800$ r.p.m. ; $\theta = 0.25° = 0.25 \times \frac{\pi}{180} = 0.0044$ rad ; $L = 1$ m $= 1000$ mm ; $G = 84$ GPa $= 84 \times 10^9$ N/m^2 $= 84 \times 10^3$ N/mm^2

Diameter of the spindle

Let d = Diameter of the spindle in mm.

We know that the torque transmitted by the spindle,

$$T = \frac{P \times 60}{2\pi N} = \frac{4000 \times 60}{2\pi \times 800} = 47.74 \text{ N-m} = 47\,740 \text{ N-mm}$$

We also know that $\frac{T}{J} = \frac{G \times \theta}{L}$ or $J = \frac{T \times l}{G \times \theta}$

$$\frac{\pi}{32} \times d^4 = \frac{47\,740 \times 1000}{84 \times 10^3 \times 0.0044} = 129\,167$$

$\therefore$ $d^4 = 129\,167 \times 32 / \pi = 1.3 \times 10^6$ or $d = 33.87$ say 35 mm **Ans.**

Shear stress induced in the spindle

Let τ = Shear stress induced in the spindle.

We know that the torque transmitted by the spindle (T),

$$47\,740 = \frac{\pi}{16} \times \tau \times d^3 = \frac{\pi}{16} \times \tau\,(35)^3 = 8420\,\tau$$

$\therefore$ $\tau = 47\,740 / 8420 = 5.67$ N/mm^2 $= 5.67$ MPa **Ans.**

Atmiya University Rajkot

Example 14.22. *Compare the weight, strength and stiffness of a hollow shaft of the same external diameter as that of solid shaft. The inside diameter of the hollow shaft being half the external diameter. Both the shafts have the same material and length.*

Solution. Given : $d_o = d$; $d_i = d_o / 2$ or $k = d_i / d_o = 1 / 2 = 0.5$

Comparison of weight

We know that weight of a hollow shaft,

$$W_H = \text{Cross-sectional area} \times \text{Length} \times \text{Density}$$

$$= \frac{\pi}{4}\left[(d_o)^2 - (d_i)^2\right] \times \text{Length} \times \text{Density} \qquad \text{...(i)}$$

and weight of the solid shaft,

$$W_S = \frac{\pi}{4} \times d^2 \times \text{Length} \times \text{Density} \qquad \text{...(ii)}$$

Atmiya University Rajkot

Since both the shafts have the same material and length, therefore by dividing equation (*i*) by equation (*ii*), we get

$$\frac{W_H}{W_S} = \frac{(d_o)^2 - (d_i)^2}{d^2} = \frac{(d_o)^2 - (d_i)^2}{(d_o)^2} \qquad \text{...}(\because d = d_o)$$

$$= 1 - \frac{(d_i)^2}{(d_o)_2} = 1 - k^2 = 1 - (0.5)^2 = 0.75 \text{ Ans.}$$

Comparison of strength

We know that strength of the hollow shaft,

$$T_H = \frac{\pi}{16} \times \tau\ (d_o)^3\ (1 - k^4) \qquad \text{...(iii)}$$

and strength of the solid shaft,

$$T_S = \frac{\pi}{16} \times \tau \times d^3 \qquad \text{...(iv)}$$

Dividing equation *(iii)* by equation *(iv)*, we get

$$\frac{T_H}{T_S} = \frac{(d_o)^3\ (1 - k^4)}{d^3} = \frac{(d_o)^3\ (1 - k^4)}{(d_o)^3} = 1 - k^4 \qquad \text{...}(\because d = d_o)$$

$$= 1 - (0.5)^4 = 0.9375 \text{ Ans.}$$

Comparison of stiffness

Atmiya University Rajkot

We know that stiffness

$$= \frac{T}{\theta} = \frac{G \times J}{L}$$

∴ Stiffness of a hollow shaft,

$$S_H = \frac{G}{L} \times \frac{\pi}{32} \left[(d_o)^4 - (d_i)^4 \right] \qquad \text{...}(v)$$

and stiffness of a solid shaft,

$$S_S = \frac{G}{L} \times \frac{\pi}{32} \times d^4 \qquad \text{...}(vi)$$

Dividing equation *(v)* by equation *(vi)*, we get

$$\frac{S_H}{S_S} = \frac{(d_o)^4 - (d_i)^4}{d^4} = \frac{(d_o)^4 - (d_i)^4}{(d_o)^4} = 1 - \frac{(d_i)^4}{(d_o)^4} \qquad \text{...}(\because d = d_o)$$

$$= 1 - k^4 = 1 - (0.5)^4 = 0.9375 \text{ Ans.}$$

EXERCISES

1. A shaft running at 400 r.p.m. transmits 10 kW. Assuming allowable shear stress in shaft as 40 MPa, find the diameter of the shaft. [Ans. 35 mm]

2. A hollow steel shaft transmits 600 kW at 500 r.p.m. The maximum shear stress is 62.4 MPa. Find the outside and inside diameter of the shaft, if the outer diameter is twice of inside diameter, assuming that the maximum torque is 20% greater than the mean torque. [Ans. 100 mm ; 50 mm]

3. A hollow shaft for a rotary compressor is to be designed to transmit a maximum torque of 4750 N-m. The shear stress in the shaft is limited to 50 MPa. Determine the inside and outside diameters of the shaft, if the ratio of the inside to the outside diameter is 0.4. [Ans. 35 mm ; 90 mm]

4. A motor car shaft consists of a steel tube 30 mm internal diameter and 4 mm thick. The engine develops 10 kW at 2000 r.p.m. Find the maximum shear stress in the tube when the power is transmitted through a 4 : 1 gearing. [Ans. 30 MPa]

5. A cylindrical shaft made of steel of yield strength 700 MPa is subjected to static loads consisting of a bending moment of 10 kN-m and a torsional moment of 30 kN-m. Determine the diameter of the shaft using two different theories of failure and assuming a factor of safety of 2. [Ans. 100 mm]

Atmiya University Rajkot

Combined bending and torsion loads on shaft: Shaft carrying gears.

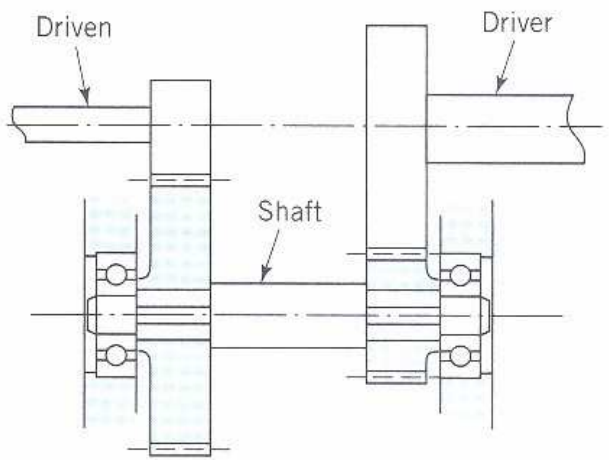

Gear countershaft

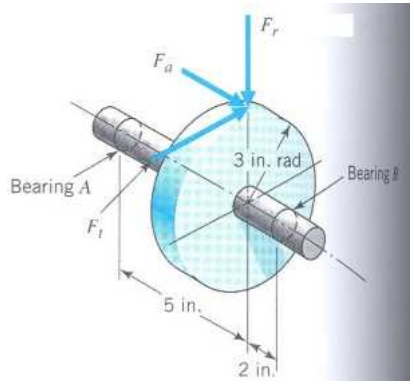

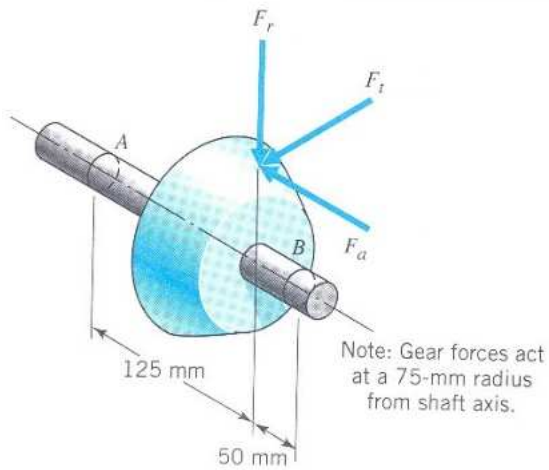

From power and rpm find the torque (T), which gives rise to shear stress.

From Torque (T) and diameter (d), find $F_t = 2T/d$. From F_t and pressure angles of gears you can find F_r and F_a.

F_r and F_t are orthogonal to each other and are both transverse forces to the shaft axis, which will give rise to normal bending stress in the shaft. When shaft rotates, bending stress changes from tensile to compressive and then compressive to tensile, ie. completely reversing state of stress.

F_a will give rise to normal axial stress in the shaft.

Atmiya University Rajkot

Loads on shaft due to pulleys

Pulley torque (T) = Difference in belt tensions in the tight (t_1) and slack (t_2) sides of a pulley times the radius (r), ie

$T = (t_1 - t_2) x r$

Left pulley torque

$T_1 = (7200-2700)x380=1,710,000$ N-mm

Right pulley has exactly equal and opposite torque:

$T_2 = (6750-2250)x380=1,710,000$ N-mm

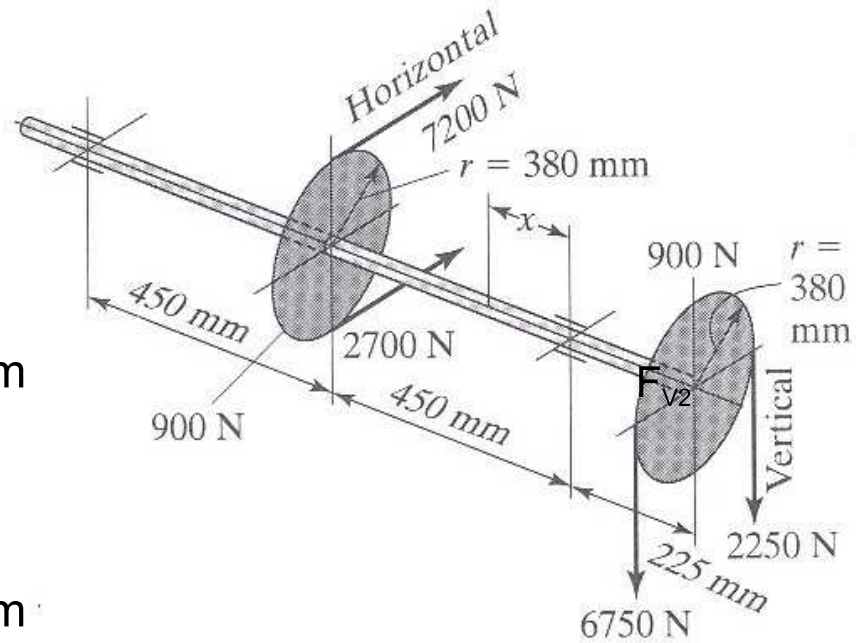

Bending forces in vertical (F_v) and horizontal (F_H) directions:

At the left pulley: F_{V1}=900N; F_{H1}=7200+2700 = 9900N

At the right pulley: F_{V2}=900+6750+2250=9900N; F_{H2}=0

Atmiya University Rajkot

Torque and Bending moment diagrams for the pulley system

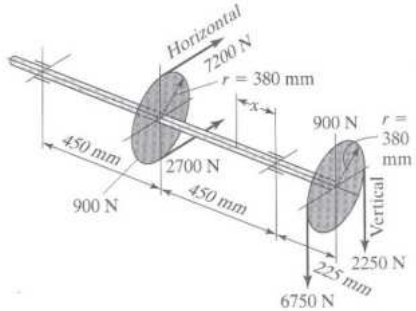

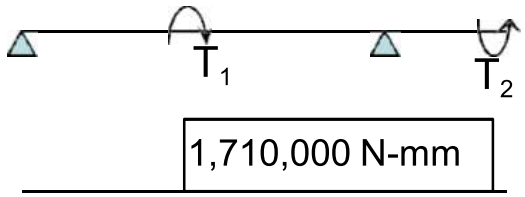

Torque diag.

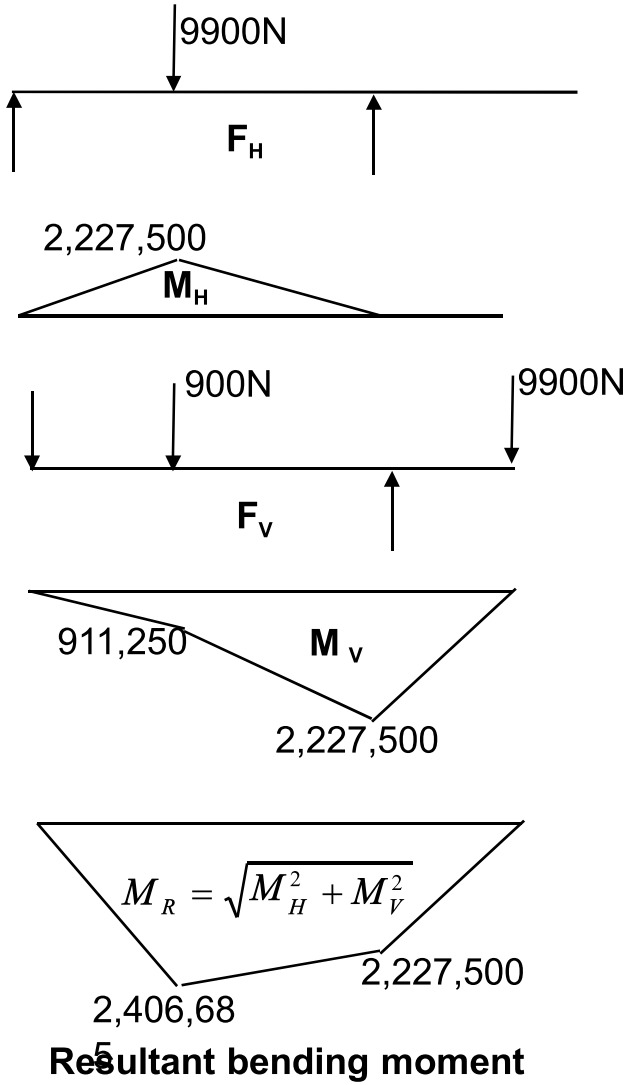

Resultant bending moment

From Horizontal forces (F_H) and vertical forces (F_v), Bending moments M_H & M_V are drawn separately.

Then the resultant moments at various points on the shaft can be found from

$$M_R = \sqrt{M_H^2 + M_V^2}$$

The section of shaft where the left pulley is located has obviously the highest combination of Torque (1,710,000 N-mm) and Bending moment (2,406,685 N-mm)

Atmiya University Rajkot

Power, toque & speed

For linear motion:

Power = F.v (force x velocity)

For rotational motion

Power P = Torque x angular velocity

= T (in-lb).ω (rad/sec) in-lb/sec

= T.(2π n/60) in-lb/sec [n=rpm]

= T.(2π n/(60*12*550)) HP [HP=550 ft-lb/sec]

= T.n/63,025 HP

or, T= 63,025HP/n (in-lb), where n = rpm

Similarly, T= 9,550,000kW/n (N-mm), where n = rpm

Atmiya University Rajkot

Principal Normal Stresses and Max Distortion Energy Failure criterion for non-rotating shafts

The stress at a point on the shaft is normal stress (σ) in X direction and shear stress (τ) in XY plane.

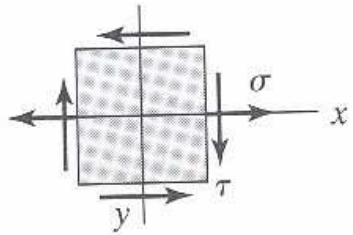

From Mohr Circle:

$$S_1 = \frac{\sigma}{2} + \sqrt{\left(\frac{\sigma}{2}\right)^2 + \tau^2} \; and \; S_2 = \frac{\sigma}{2} - \sqrt{\left(\frac{\sigma}{2}\right)^2 + \tau^2}$$

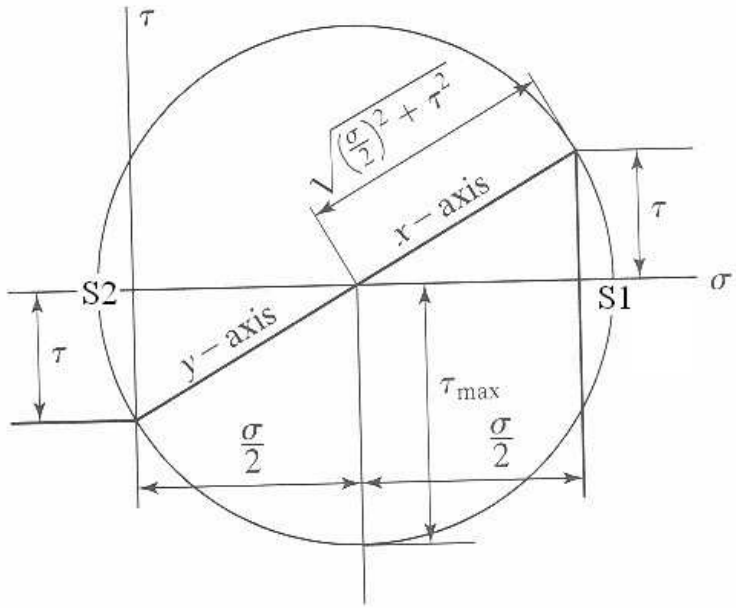

Max Distortion Energy theory:

$$S_1^2 + S_2^2 - S_1 S_2 \le \left(\frac{S_{yp}}{N_{fs}}\right)^2$$

Putting values of S_1 & S_2 and simplifying:

$$\sigma^2 + 3\tau^2 \le \left(\frac{S_{yp}}{N_{fs}}\right)^2$$

This is the design equation for non rotating shaft

Atmiya University Rajkot

Design of rotating shafts and fatigue consideration

The most frequently encountered stress situation for a rotating shaft is to have completely reversed bending and steady torsional stress. In other situations, a shaft may hav a reversed torsional stress along with reversed bending stress.

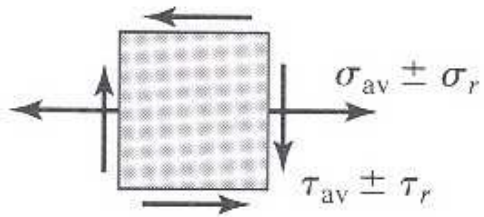

The most generalized situation the rotating shaft may have both steady and cyclic components of bending stress (σ_{av},σ_r) and torsional stress (τ_{av},τ_r).

From Soderberg s fatigue criterion, the equivalent static bending and torsional stresses are:

$$\sigma_{\text{equivalent}} = \sigma_{av} + \sigma_r K_{fb}\left(\frac{S_{yp}}{S_e}\right)$$

$$\tau_{\text{equivalent}} = \tau_{av} + \tau_r K_{ft}\left(\frac{S_{yp}}{S_e}\right)$$

Using these equivalent static stresses in our static design equation, the equation for rotating shaft is:

$$\left(\sigma_{av} + \sigma_r K_{fb}\left(\frac{S_{yp}}{S_e}\right)\right)^2 + 3\left(\tau_{av} + \tau_r K_{ft}\left(\frac{S_{yp}}{S_e}\right)\right)^2 \leqq \left(\frac{S_{yp}}{N_{fs}}\right)^2$$

Atmiya University Rajkot

Bearing mounting considerations and stress concentration

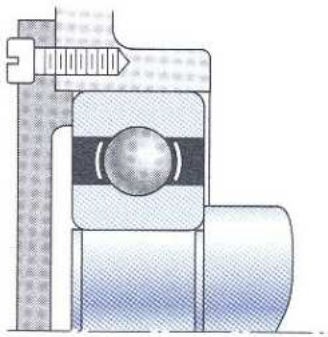

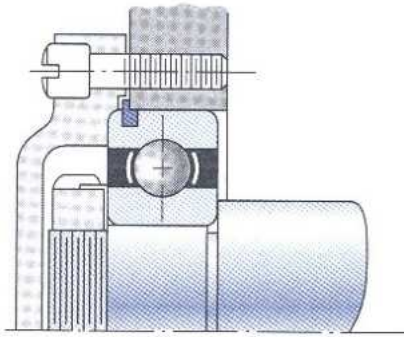

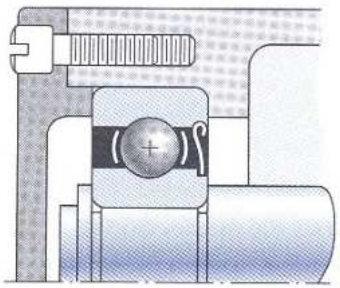

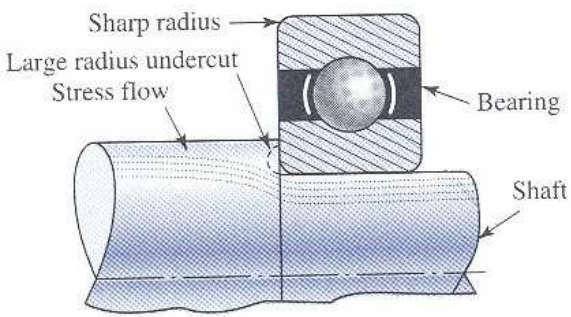

(a)

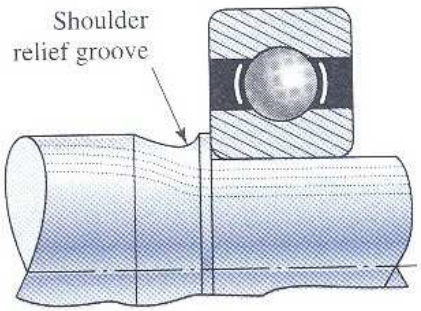

(b)

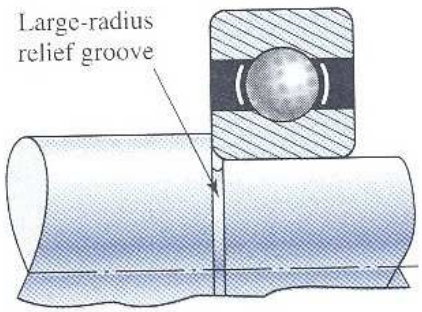

(c)

Atmiya University
Rajkot

Conventional retaining (or snap) rings fit in grooves and take axial load, but groves cause stress concentration in shaft

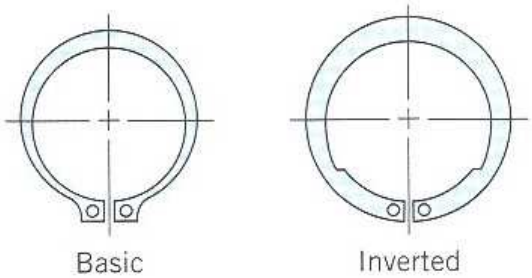

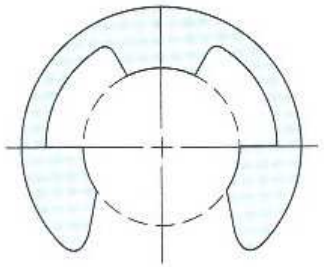

External rings (fit on shaft)

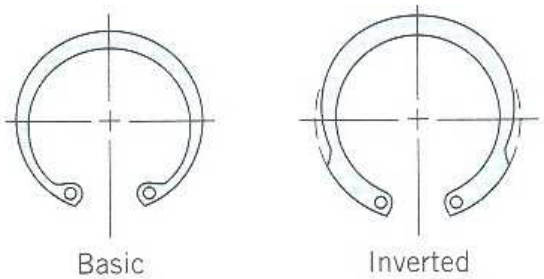

Internal rings (fit in housing)

Retaining rings are standardized items, available in various standard sizes with various axial load capacities.

Atmiya University Rajkot

Push type retaining rings no grooves required, less stress concentration, but less axial support

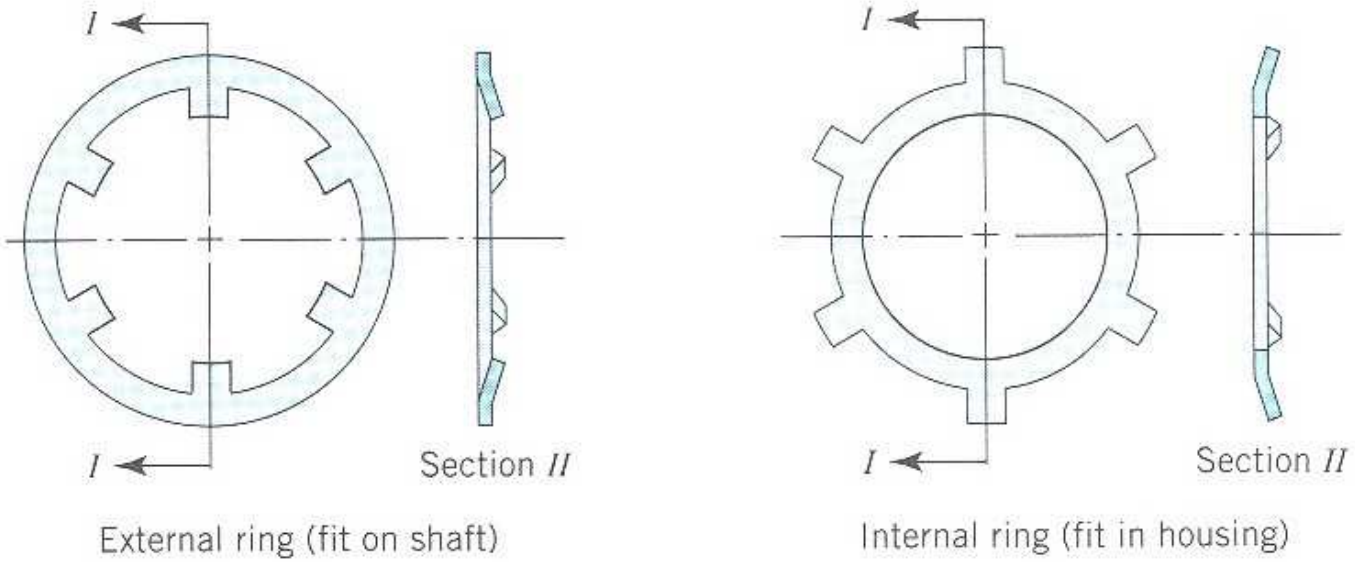

(*b*) Push-on type – no grooves required

Teeth deflect when installed to "bite in" and resist removal
(less positive than conventional type)

Atmiya University
Rajkot

Various types of keys for transmitting torque

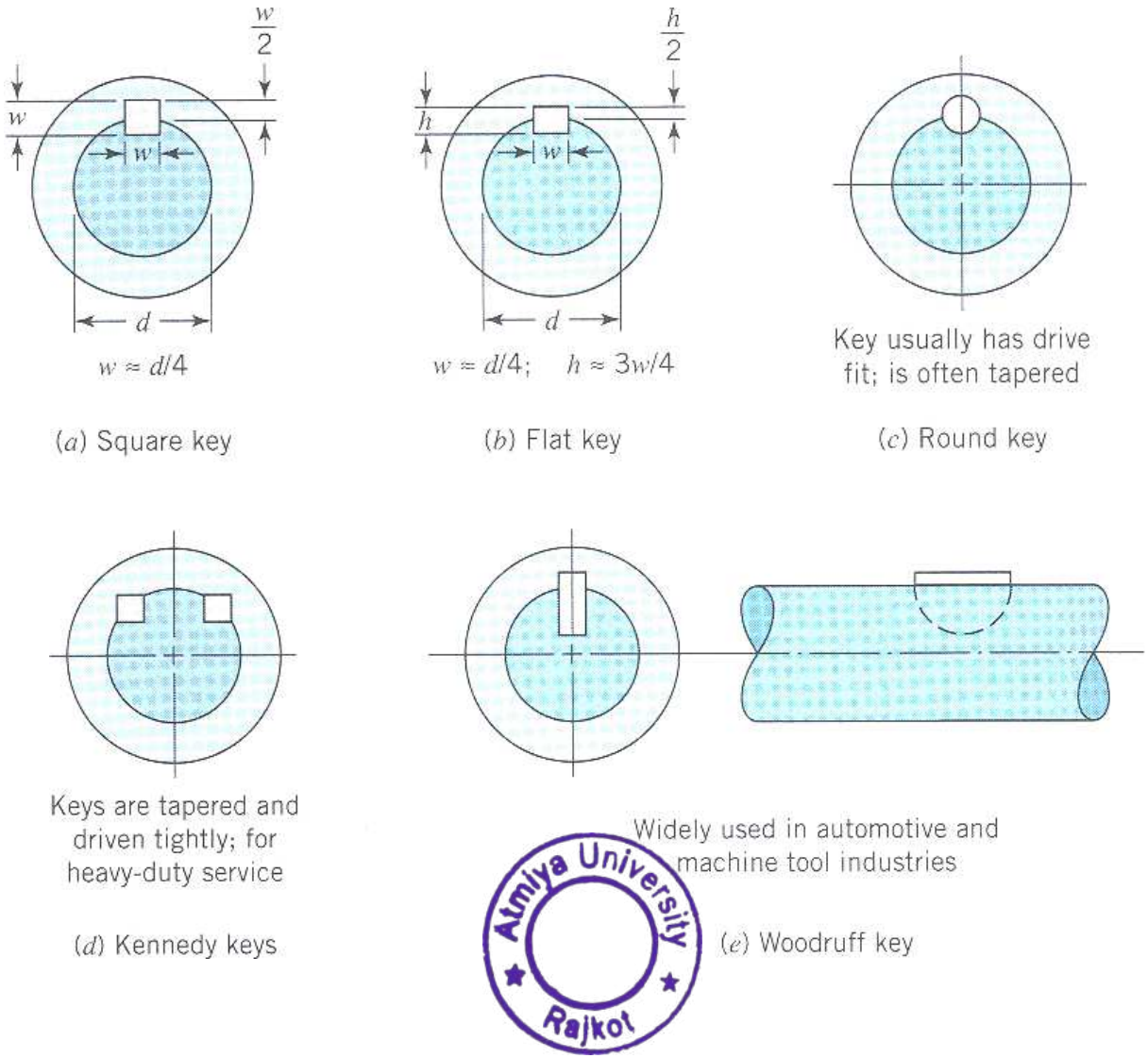

Atmiya University Rajkot

Other common types of keys

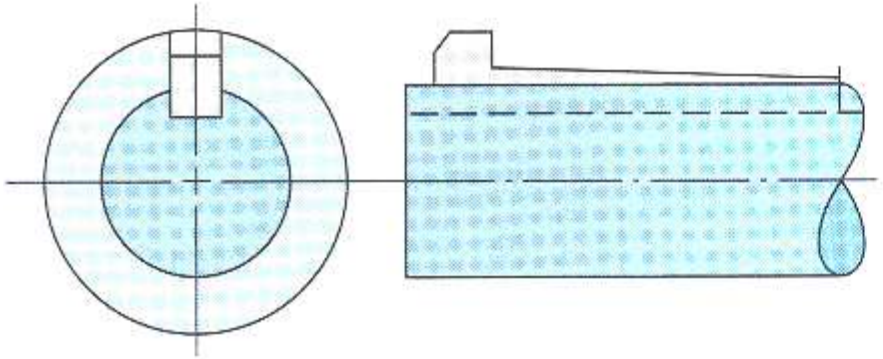

Usually tapered, giving tight fit when driven into place; gib head facilitates removal

(*f*) Gib-head key

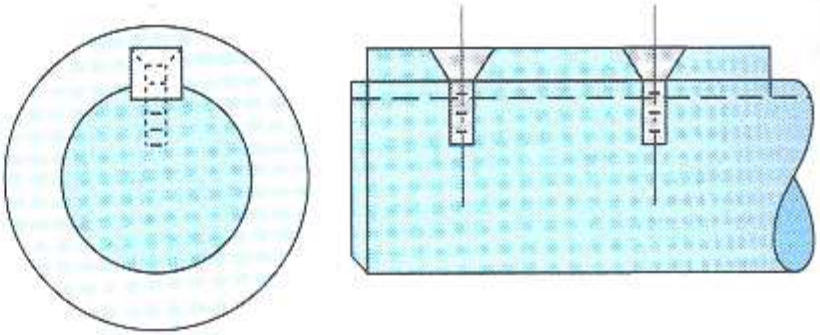

Key is screwed to shaft; hub is free to slide axially – easier sliding is obtained with two keys spaced 180° apart

(*g*) Feather key

Atmiya University Rajkot

Various types of collar pins

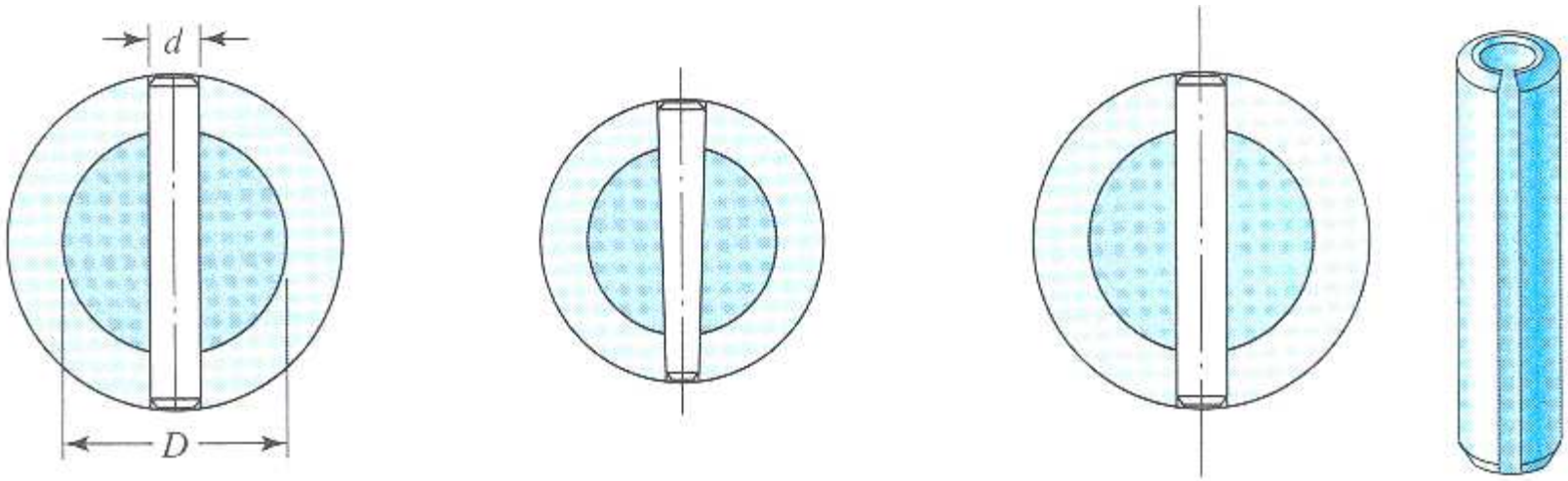

(a) Straight round pin

(b) Tapered round pin

(c) Split tubular spring pin

Atmiya University
Rajkot

Integrated splines in hubs and shafts allow axial motion and transmits torque

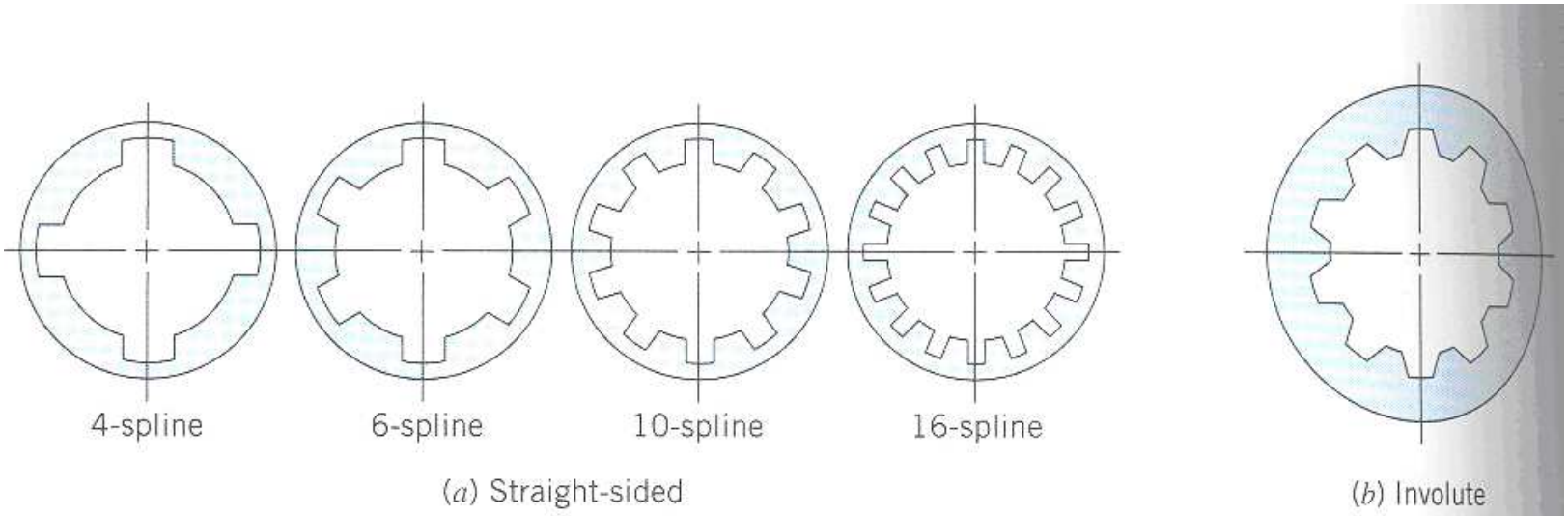

Common types of splines.

All keys, pins and splines give rise to stress concentration in the hub and shaft

Atmiya University Rajkot

Atmiya University,Rajkot
Faculty of Engineering & Technology

Department of Mechanical Engineering

Prepared by: Shivang S. Jani

Course: Design of Machine Elements (21BTMECC304)

Unit V: Design of Power Screws

Introduction

- The power screws (also known as ***translation screws)*** are used to convert rotary motion into translatory motion.
- For example, in the case of the lead screw of lathe, the rotary motion is available but the tool has to be advanced in the direction of the cut against the cutting resistance of the material.
- In case of screw jack, a small force applied in the horizontal plane is used to raise or lower a large load.

Atmiya University
Rajkot

- Power screws are also used in vices, testing machines, presses, etc.
- In most of the power screws, the nut has axial motion against the resisting axial force while the screw rotates in its bearings.
- In some screws, the screw rotates and moves axially against the resisting force while the nut is stationary and in others the nut rotates while the screw moves axially with no rotation.

Atmiya University
Rajkot

Types of Thread Profile Used in Power Screws

1) Square Thread –

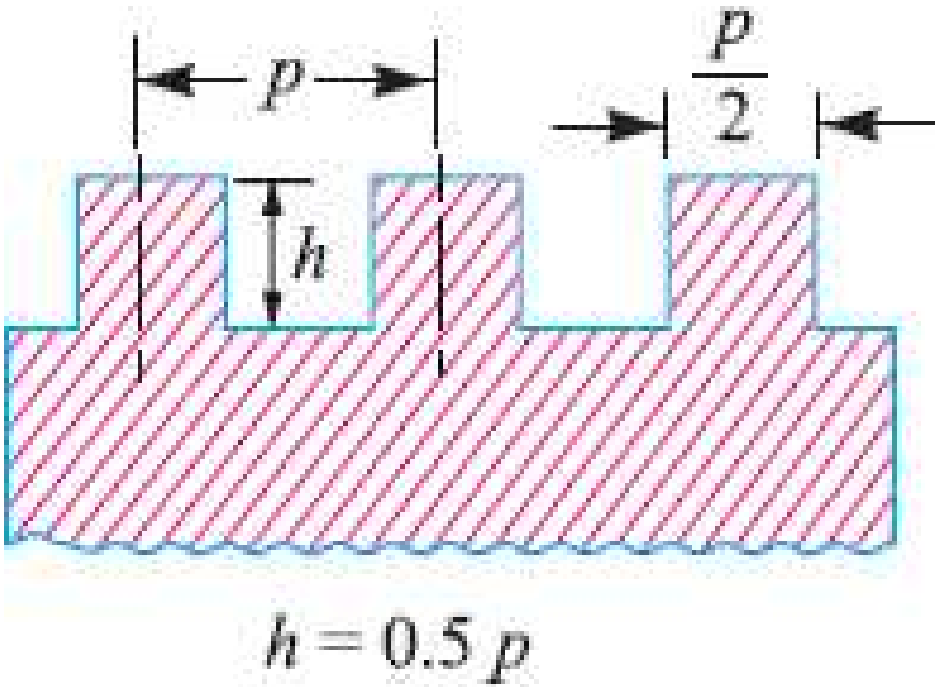

$h = 0.5\,p$

(a) Square thread.

Application – Screw jack, Mechanical Press, Clamping devices.

Atmiya University Rajkot

- This threads is adopted for the transmission of power in either direction.
- It is difficult to cut with taps and dies.
- It is generally cut on lathe machine with single point cutting tool.

- **Advantages –**

1. It has maximum efficiency.
2. Minimum radial or bursting pressure on nut.
3. These are of self locking type.

- **Limitations –**

1. Strength of square thread is less as compared with other forms of threads.
2. These threads can not be used conveniently with split nut because of wear compensation is not possible and it is difficult in engagement & disengagement.

Atmiya University Rajkot

2) Acme Threads –

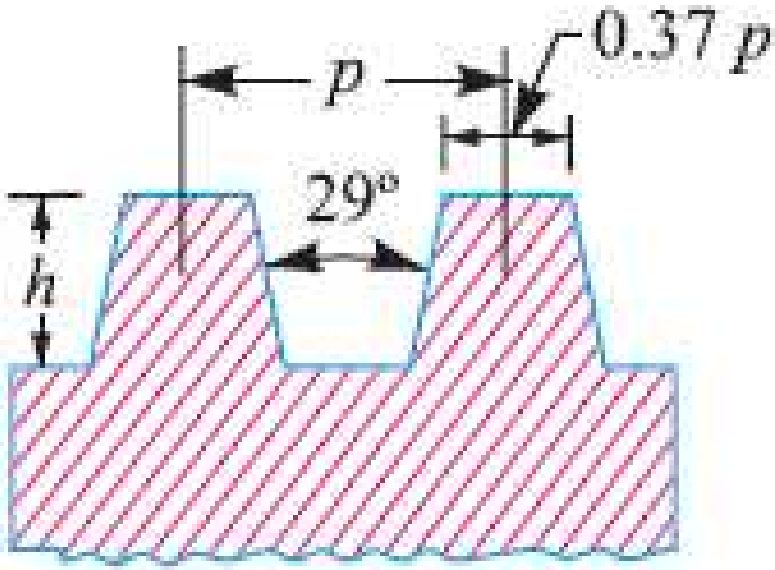

$h = 0.5\,p + 0.25$ mm

(b) Acme thread.

- The acme thread are not efficient as square thread.
- The acme threads are easier to cut and are stronger than square threads.
- **Application** – Lead screw of a lathe machine.

Atmiya University Rajkot

- **Advantages –**

1. These permits the use of split nut which can be easy for engagement & disengagement and compensate wear.
2. These are stronger than the square threads in shear because of the larger C/s at the root.

- **Limitations –**

1. The efficiency is lower than that of square thread due to slop given to the sides.
2. The slop on the sides introduces some brusting pressure on the nut.

Marwadi University Rajkot

3) <u>Trapezoidal Threads</u> –

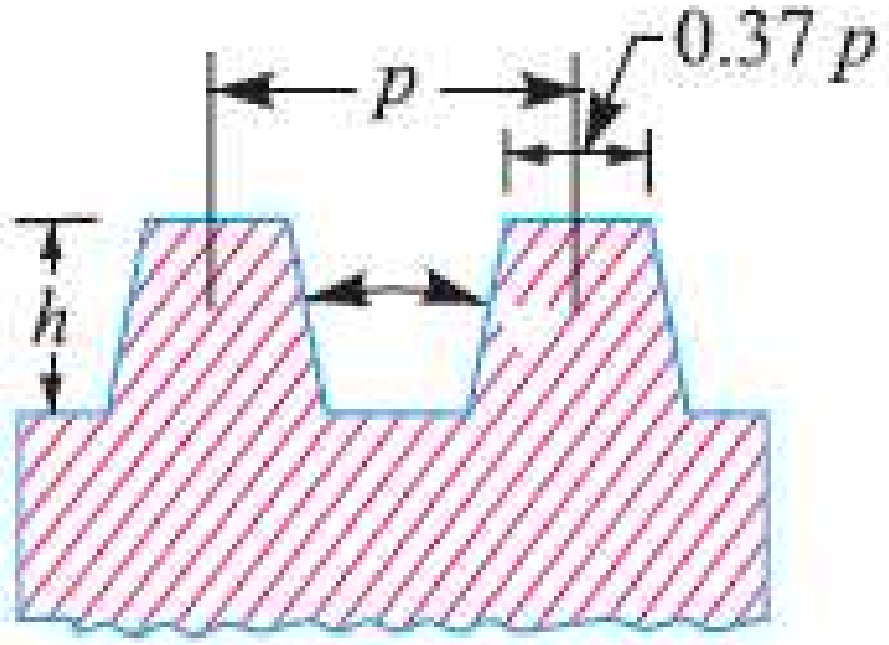

$h = 0.5\,p + 0.25$ mm

(*b*) Acme thread.

The trapezoidal threads are similar to Acme threads except the thread angle is 30^0 in trapezoidal threads.

Atmiya University Rajkot

4) <u>Buttress Threads</u> –

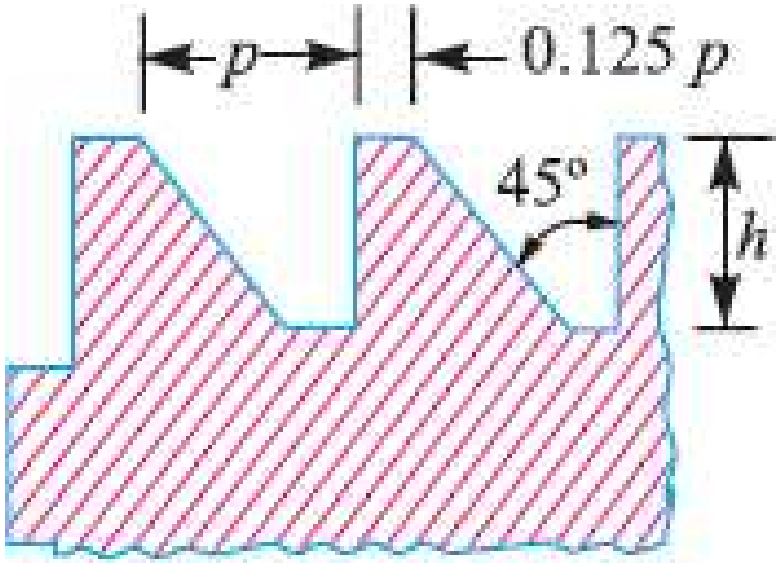

$h = 0.75\,p$

(c) Buttress thread.

- A buttress thread *is used when large forces act along the screw axis in* one direction only.
- This thread combines the higher efficiency of square thread and the ease of cutting and the adaptability to a split nut of acme thread.
- It is stronger than other threads because of greater thickness at the base of the thread.
- The buttress thread has limited use for power transmission.
- It is employed as the thread for light jack screws and vices.

Atmiya University Rajkot

Torque Required to Raise Load for Square Threaded Screws

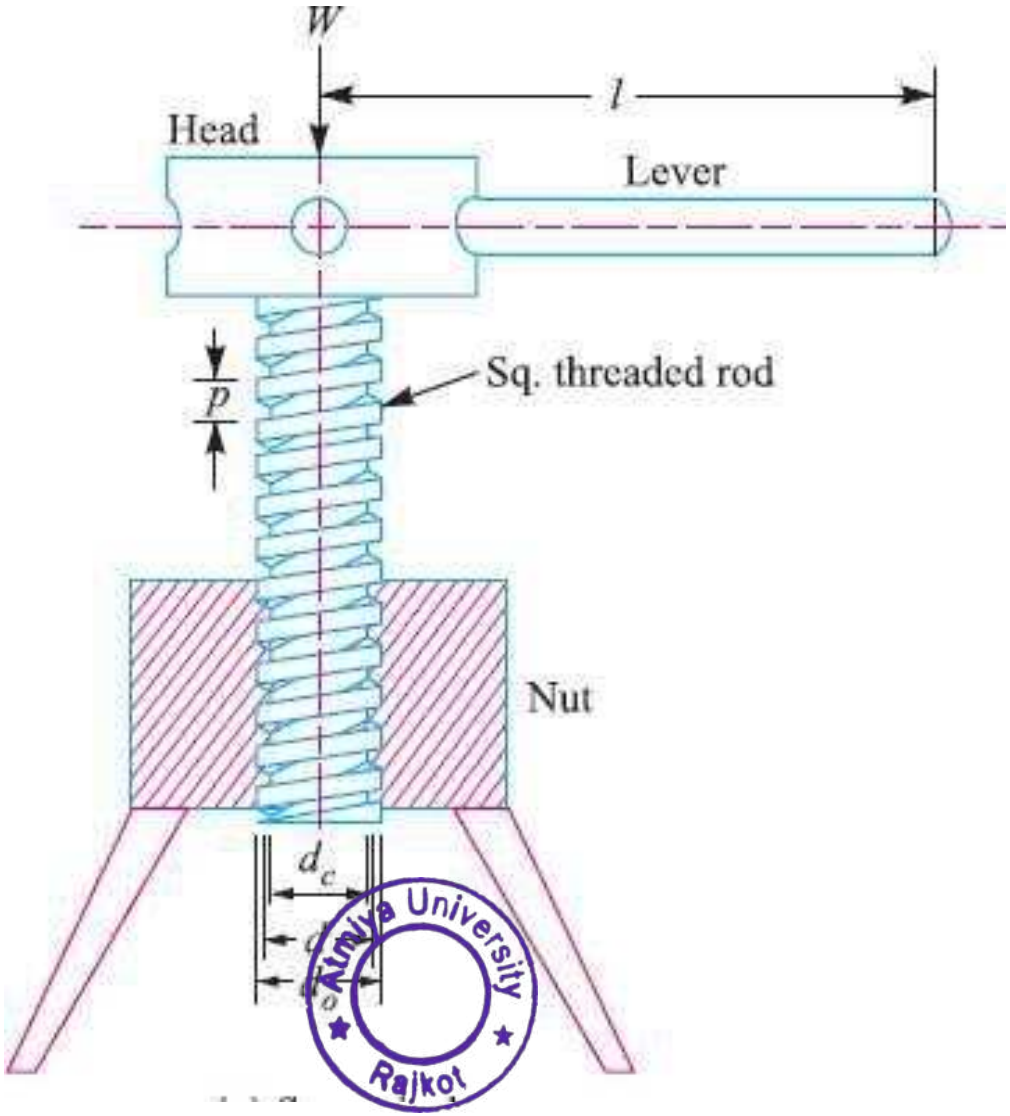

Atmiya University Rajkot

$W = Load\ to\ be\ raised\ in\ N.$

$P = Effort\ applied\ at\ the\ circumference\ of\ screw$

$p = Pitch\ of\ the\ screw\ in\ mm$

$d = mean\ diameter\ of\ the\ screw\ in\ mm$

$\alpha = Helix\ angle$

$\mu = coefficient\ of\ friction\ between\ screw\ and\ nut$

$\mu = \tan\phi$

$\phi = friction\ angle$

$L = Lead\ of\ screw$

Atmiya University Rajkot

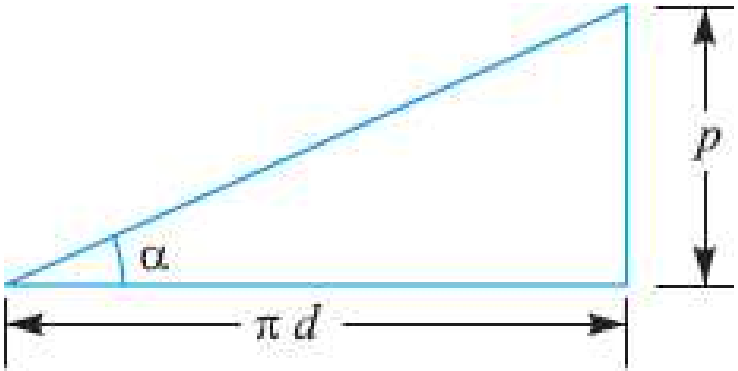

(a) Development of a screw.

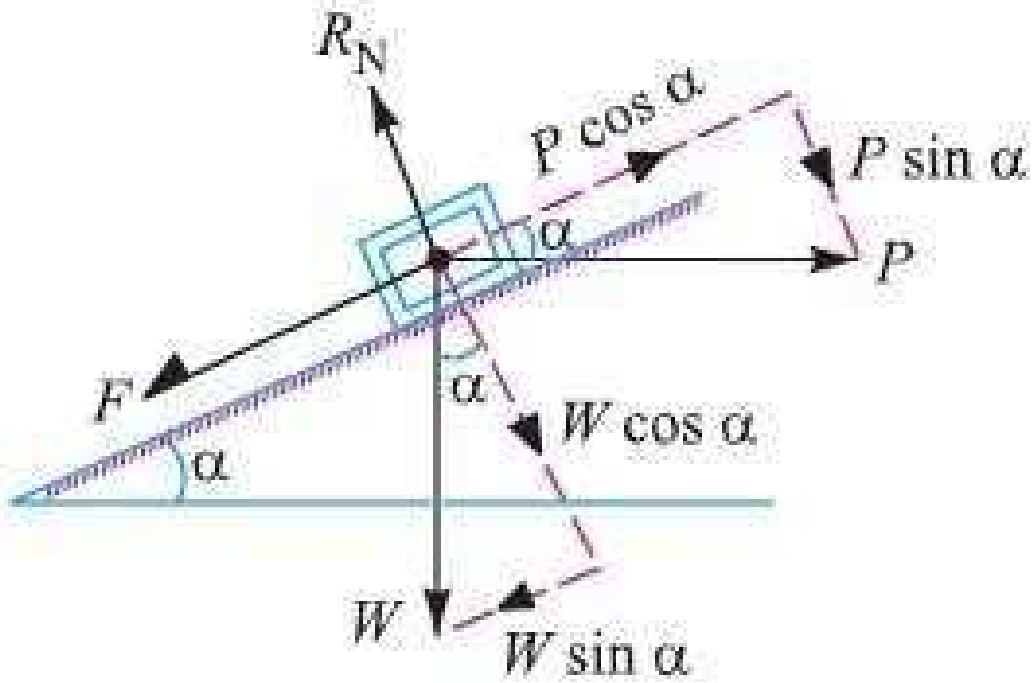

(b) Forces acting on the screw.

Atmiya University Rajkot

Atmiya University Rajkot

From the geometry of fig.

$$\tan\alpha = \frac{pitch}{\pi d} = \frac{p}{\pi\, d}$$

The force of friction $F = \mu R_N$ *will acts downwards*

Re*solving the forces along the path*

$$\sum F_H = 0$$

$$P\cos\alpha - W\sin\alpha - F = 0$$

$$P\cos\alpha - W\sin\alpha - \mu\, R_N = 0$$

$$\therefore P\cos\alpha = W\sin\alpha + \mu\, R_N \quad ---(1)$$

Atmiya University Rajkot

$$\sum F_V = 0$$

$$R_N - P\sin\alpha - W\cos\alpha = 0$$

$$R_N = P\sin\alpha + W\cos\alpha ---(2)$$

$$Put\ the\ value\ of\ R_N\ in\ eq.1$$

$$P\cos\alpha = W\sin\alpha + \mu(P\sin\alpha + W\cos\alpha)$$

$$P\cos\alpha = W\sin\alpha + \mu P\sin\alpha + \mu W\cos\alpha$$

$$P\cos\alpha - \mu P\sin\alpha = W\sin\alpha + \mu W\cos\alpha$$

Atmiya University Rajkot

$$P(\cos\alpha - \mu\sin\alpha) = W(\sin\alpha + \mu\cos\alpha)$$

$$P = W \times \frac{(\sin\alpha + \mu\cos\alpha)}{(\cos\alpha - \mu\sin\alpha)}$$

$$But\ \mu = \tan\phi$$

$$P = W \times \frac{(\sin\alpha + \tan\phi.\cos\alpha)}{(\cos\alpha - \tan\phi.\sin\alpha)}$$

$$But\ \tan\phi = \frac{\sin\phi}{\cos\phi}$$

$$P = W \times \frac{(\sin\alpha + \frac{\sin\phi}{\cos\phi} \times \cos\alpha)}{(\cos\alpha - \frac{\sin\phi}{\cos\phi} \times \sin\alpha)}$$

Atmiya University Rajkot

$$P = W \times \frac{(\sin\alpha.\cos\phi + \sin\phi.\cos\alpha)}{(\cos\alpha.\cos\phi - \sin\phi.\sin\alpha)}$$

$$But \sin(A+B) = \sin A.\cos B + \cos A.\sin B$$

$$\& \cos(A+B) = \cos A.\cos B - \sin A.\sin B$$

$$P = W \times \frac{\sin(\alpha + \phi)}{\cos(\alpha + \phi)}$$

$$P = W \times \tan(\phi + \alpha)$$

Atmiya University
Rajkot

$$\therefore Torque required\ to\ overcome thread\ friction$$

$$T = P \times \frac{d}{2}$$

$$\therefore T = W \times \tan(\phi + \alpha) \times \frac{d}{2}$$

If effort is applied by lever of length 'l'

$$then, T = P \times l$$

$$\therefore T = W \times \tan(\phi + \alpha) \times l$$

Atmiya University
Rajkot

Torque Required to Lower the Load

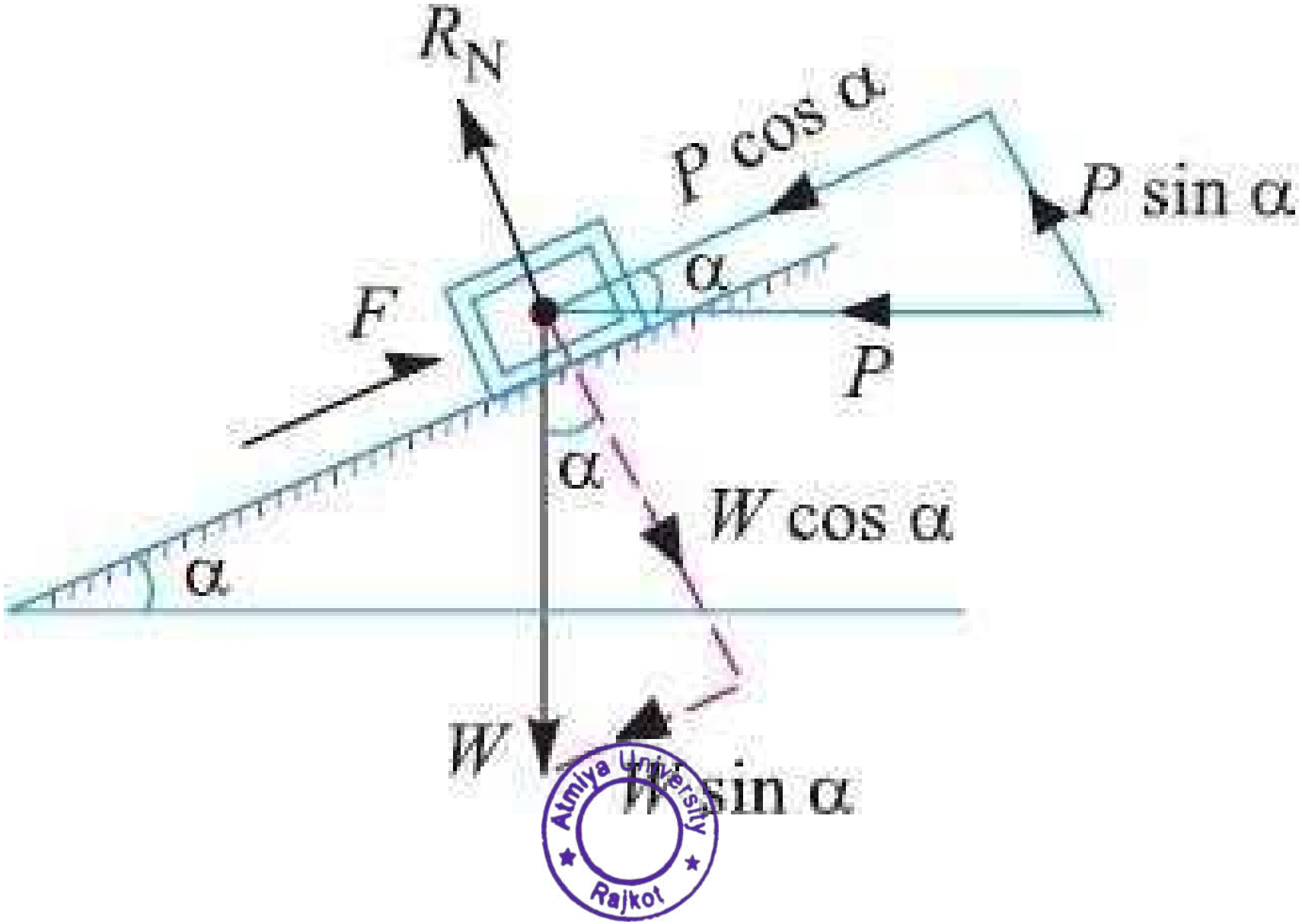

Atmiya University Rajkot

- Resolving the forces in horizontal & vertical direction.

$$\sum F_H = 0$$

$$P\cos\alpha = F - W\sin\alpha$$

$$P\cos\alpha = \mu R_N - W\sin\alpha ----(1)$$

$$\sum F_V = 0$$

$$R_N = W\cos\alpha - P\sin\alpha ----(2)$$

$$Put\ eq.2\ in\ eq.1$$

$$P\cos\alpha = \mu(W\cos\alpha - P\sin\alpha) - W\sin\alpha$$

$$P\cos\alpha = \mu W\cos\alpha - \mu P\sin\alpha - W\sin\alpha$$

$$P\cos\alpha + \mu P\sin\alpha = \mu W\cos\alpha - W\sin\alpha$$

$$P(\cos\alpha + \mu\sin\alpha) = W(\mu\cos\alpha - \sin\alpha)$$

Punjab University Rawalpindi

$$P = W \times \frac{(\mu \cos\alpha - \sin\alpha)}{(\cos\alpha + \mu \sin\alpha)}$$

$$P = W \times \frac{(\tan\phi \cos\alpha - \sin\alpha)}{(\cos\alpha + \tan\phi \sin\alpha)} \quad .....(as \mu = \tan\phi)$$

Multiply and divide by $\cos\phi$

$$P = W \times \frac{(\sin\phi \cos\alpha - \sin\alpha \cos\phi)}{(\cos\phi \cos\alpha + \sin\phi \sin\alpha)}$$

Atmiya University
Rajkot

$$P = W \times \frac{\sin(\phi - \alpha)}{\cos(\phi - \alpha)}$$

$$P = W \times \tan(\phi - \alpha)$$

$\therefore$ *Torque required to lower the load in overcomming the friction* (T).

$$T = P \times \frac{d}{2}$$

$$T = W \tan(\phi - \alpha)\frac{d}{2}$$

Atmiya University Rajkot

Self Locking & Overhauling of Screw

- **Self Locking Screw –**

The torque required at the circumference of the screw to lower the load is given by

$$T = W \tan(\phi - \alpha)\frac{d}{2}$$

In the above equation, if friction angle is greater than helix angle (Ø > α) then the torque required to lower the screw is positive i.e. some effort is required to lower the load, such a screw is known as self **locking screw.**

Atmiya University Rajkot

Self Locking & Overhauling of Screw

- **Overhauling Screw –**

The torque required at the circumference of the screw to lower the load is given by

$$T = W \tan(\phi - \alpha)\frac{d}{2}$$

In the above equation, if friction angle is less than helix angle (Ø < α) then the torque required to lower the screw is negative i.e. the load will start moving downward without application of any effort, such a screw is known as **overhauling screw.**

Atmiya University Rajkot

Design of Screw Jack

- The various parts of screw jack are

1. Screw spindle having square thread screw.
2. Nut and collar for nut.
3. Head at the top of the screw spindle for handle.
4. Cup at the top of head for the load.
5. Body of the screw jack.
6. A handle or Tommy bar.

Animation of Screw Jack

Atmiya University Rajkot

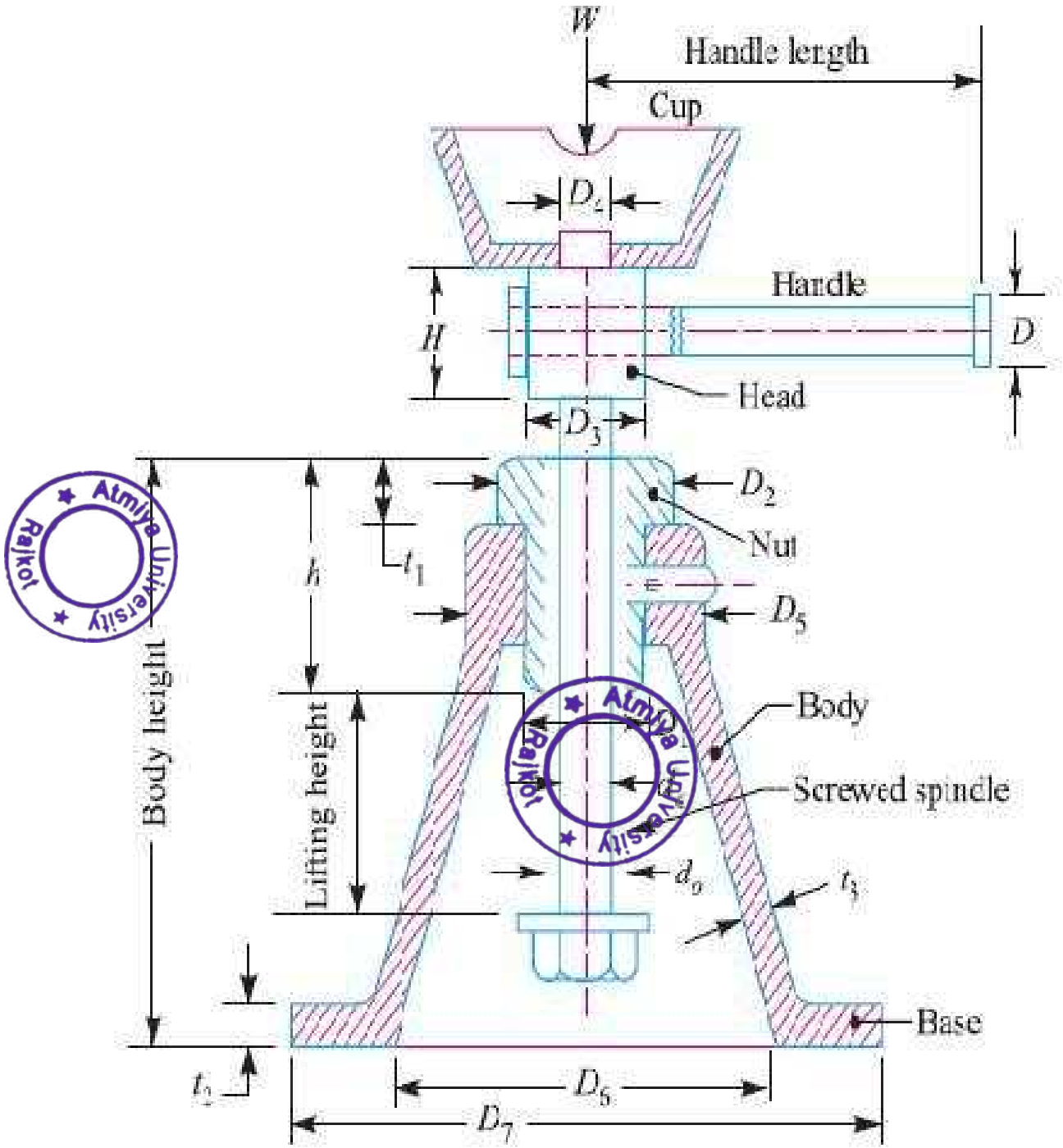

Atmiya University Rajkot

1) Design of screw –

i) Find the core diameter of screw by considering the screw under pure compression.

$$\sigma_c = \frac{W}{A} = \frac{W}{\frac{\pi}{4} \times d_c^2}$$

From this equation d_c *can be obtained*

ii) Select the standard square threads for screw

$$Take (d_c + 6) = d_c \ \ for\ design\ in\ exam$$

$$Then\ d_o = \frac{d_c}{0.84} \ \& \ d_c = d_o - p$$

$$meandia. = d = d_o - \frac{p}{2} = \frac{d_o + d_c}{2}$$

Atmiya University Rajkot

iii) In addition to direct compressive load, the screw is subjected to twisting moment (T_1), so for that the core diameter is increased and appropriately find the torque required to rotate the screw.

$$T_1 = W \tan(\phi + \alpha) \times \frac{d}{2}$$

A) Checking of Screw –

i) Shear stress due to torque

$$T_1 = \frac{\pi}{16} \times \tau \times d_c^3$$

from this eq. find shear stress (τ)

Atmiya University Rajkot

ii) Direct compressive stress due to axial load –

$$\sigma_c = \frac{W}{\frac{\pi}{4} \times d_c^2}$$

Then, use

Maximum principle stresstheory

$$\sigma_{c(\max)} = \frac{1}{2}[\sigma_c + \sqrt{\sigma_c^2 + 4\tau^2}$$

Maximum shear stress theory

$$\tau_{\max} = \frac{1}{2} \times \sqrt{\sigma_c^2 + 4\tau^2}$$

For safety

$$\sigma_{c(\max)} < \sigma_{(Given)} \quad \&$$

$$\tau_{\max} < \tau_{(Given)}$$

Atmiya University Rajkot

2) <u>Design of nut</u> –

$i)$ *The height of nut ' h' can be found by considering the bearing pressure on nut*

$$P_b = \frac{W}{\frac{\pi}{4}[d_o^2 - d_c^2] \times n}$$

where, $n =$ *no. of threads in contact with screw spindle*

$\therefore$ *Height of nut* $= h = n \times p$

where, $p =$ *pitch of threads*

Atmiya University Rajkot

$ii)$ *Check for shear stresses in screw and nut threads*

$$Shear\ stress\ in\ screw = \tau_s = \frac{W}{\pi\, d_c\, t \times n}$$

$$Shear\ stress\ in\ nut = \tau_n = \frac{W}{\pi\, d_o\, t \times n}$$

$$where, t = \frac{p}{2}$$

For safety of the screw & nut threads

$$\tau_s\ and\ \tau_n < \tau_{(Given)}$$

Atmiya University Rajkot

3) <u>Design of Nut Collar</u> –

Let, D_1 = Inner Diameter of nut collar or outer diameter of nut.

D_2 = Outer diameter of nut collar

t_1 = thickness of nut collar

a)

a) Considering tearing of nut due to tensile strength

$$\sigma_{t(nut)} = \frac{W}{\frac{\pi}{4}(D_1^2 - d_o^2)}$$

Find out D_1

Atmiya University Rajkot

$b)$ *Considering the crushing of nut and collar*

$$\sigma_{cr(nut)} = \frac{W}{\frac{\pi}{4}(D_2^2 - D_1^2)}$$

Find D_2

$c)$ *Considering the shearing of nut collar*

$$\tau_{(nut)} = \frac{W}{\pi D_1 t_1}$$

Find t_1

Atmiya University
Rajkot

4) <u>Design of (Spindle) Screw Head</u> –

To find the diameter of spindle head D_3 *and diameter of cup*

Use empirical relation as given below –

$$\text{Diameter of head} = D_3 = 1.75\, d_o$$

$$\text{Diameter of cup} = D_4 = \frac{D_3}{4}$$

Atmiya University Rajkot

5) <u>To find the torque to overcome due to friction at the top of the screw (Collar friction)</u> –

a) Assumeuniform pressurecondition

$$T_c = \frac{2}{3} \times \mu_c \times W \times [\frac{R_3^3 - R_4^3}{R_3^2 - R_4^2}]$$

b) Assumeuniform wear condition

$$T_c = \mu_c \times W \times R$$

$$Where\, R = \frac{R_3 + R_4}{2}$$

Atmiya University Rajkot

6) <u>Design of Handle</u> –

a) To design the handle, consider the total torque to which the handle will be subjected is given by –

$T_{total} = T_1 + T_c$

Assume that one person can apply a force of 300 N to 400 N

$\therefore$ *Effective length of handle required*

$$L_E = \frac{T_{total}}{300\, to\, 400\, N}$$

$\therefore$ *Length of handle* $= L = L_E +$ *Gripping length*

Atmiya University Rajkot

b) To find the diameter of handle (d_h) –

Consider the handle under bending

$$T_{total} = Total\ torque\ req.to\ raise the\ load$$

$$M = Maximum B.M.acting\ on handle$$

$$\sigma_b = Bending\ stress induced\ in handle$$

$$\therefore \sigma_b = \frac{M}{Z}$$

$$\sigma_b = \frac{M}{\frac{\pi}{32} \times d_h^3}$$

$$Find\ d_h$$

$$\therefore Height\ of\ nut = H = 2\,d_h$$

Atmiya University Rajkot

7) <u>Buckling load of the screw</u> –

Check the safety of the screw against buckling failure –

According to J.B.Johnson formula

$$Buckling\ load = W_{cr} = A_c \times \sigma_{yc}[1 - \frac{\sigma_{yc}}{4C\pi^2 E}(\frac{L}{k})^2]$$

$Where, C = end\ fixity\ coefficient = 0.25$

$k = radius\ of\ gyaration = 0.25\, d_c$

$\sigma_{yc} = yield\ point\ stress$

$L = unsupported\ length\ of\ the\ screw$

$A_c = \frac{\pi}{4} d_c^2 = c/s\ area\ of\ screw$

$E = modulus\ of\ elasticity$

Atmiya University Rajkot

Factor of safety against buckling failure is

$$N_{cr} = \frac{W_{cr}}{W}$$

For safe design of screw under buckling

$$N_{cr} \geq N_f$$

8) *Find the efficiency of the screw jack –*

$$\eta_0 = \frac{T_o}{T}$$

Atmiya University
Rajkot

9) <u>Find dimensions of screw jack body by empirical relation</u> –

$a)\ diameter\ of\ body\ at\ top = D_5 = 1.5\,D_2$

$b)\ Thickness\ of\ body = t_3 = 0.25\,d_o$

$c)\ Inside\ diameter\ at\ bottom = D_6 = 2.25\,D_2$

d)) $Outside\ diameter\ at\ bottom = D_7 = 1.75\,D_6$

$e)\ Thickness\ at\ the\ base = t_2 = 2\,t_1$

$f)\ Height\ of\ body = H_b = Max.lift + Ht.of\ nut + 100\ mm extra\ for\ clearance$

$$H_b = (H_l + h + 100)$$

Atmiya University
Rajkot

Design of Toggle Jack

Atmiya University
Rajkot

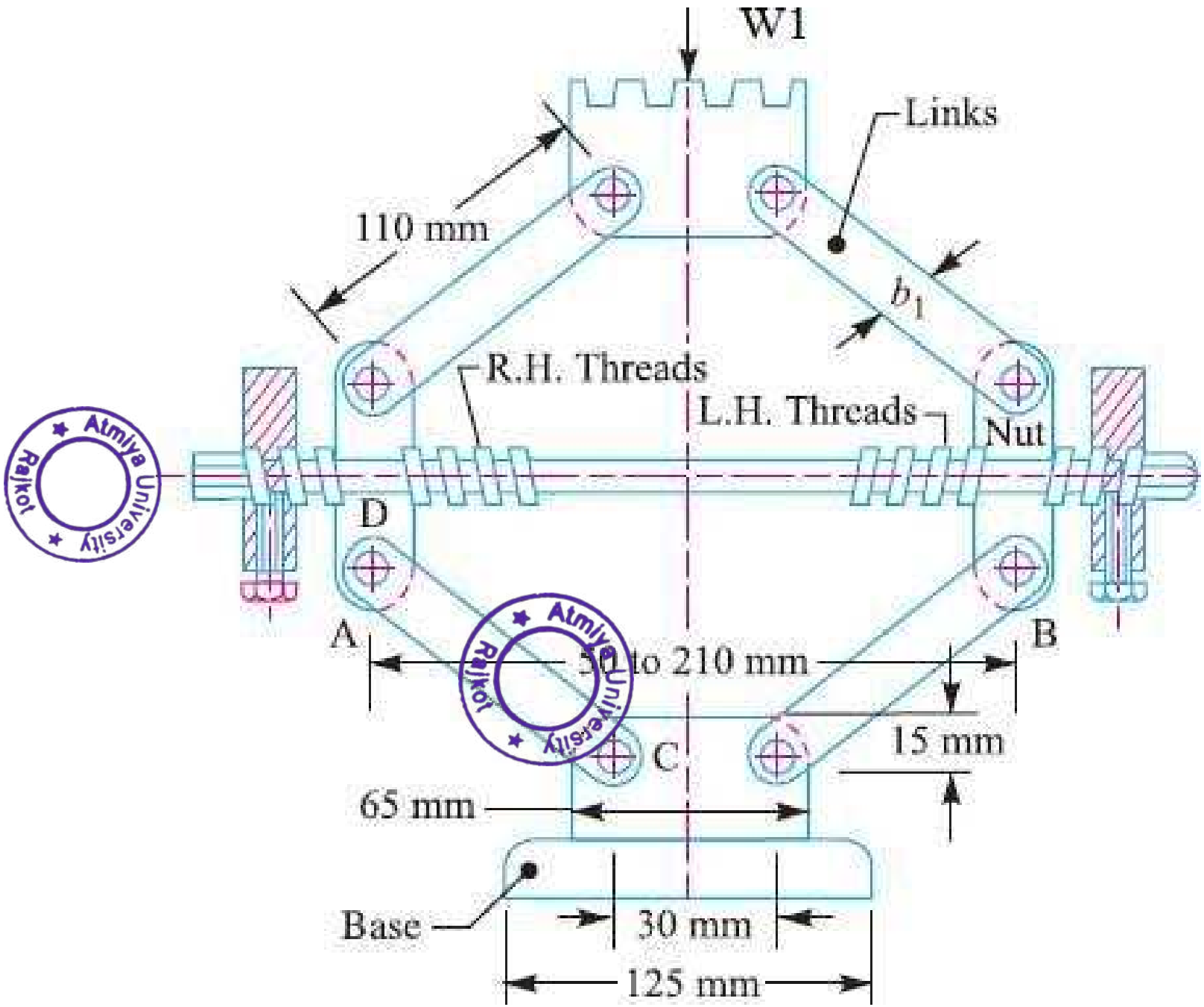

Atmiya University Rajkot

- The various parts of the toggle jack are

i) The compound screw

ii)Two nuts

iii)Eight links

iv)The pins

v) The head

➢ Animation of Toggle Jack

Atmiya University Rajkot

1) **<u>Find the maximum tensile force in screw</u>** –

The maximum load on the screw thread occurs when the jack in bottom position.

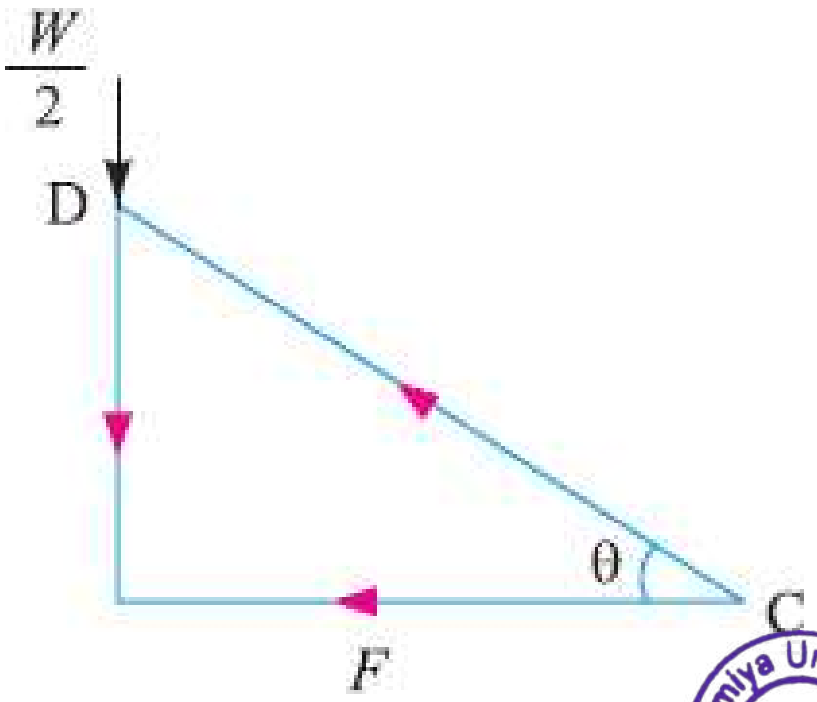

From figure

$$\tan\theta = \frac{\frac{W}{2}}{F}$$

$$\therefore F = \frac{W}{2\tan\theta}$$

Atmiya University Rajkot

$Where \theta = angle\ of\ link\ with\ horizontal$

$\Rightarrow Maximum\ value\ of\ \theta\ is\ taken\ as\ 35^0$

$Due\ to\ force\ 'F'\ links\ are\ subjected\ to\ tension\ and$

$square\ thread\ screw\ under\ pull$

$\therefore Total\ tensile\ force\ on\ thread\ screw = 2F = W$

$Considering\ screw\ under\ tensile\ failure$

$$\sigma_t = \frac{W}{\frac{\pi}{4} d_c^2}$$

$d_c\ can\ be\ obtained.$

$Then\ d_0 = d_c + p$

$$\& \ d = \frac{d_o + d_c}{2}$$

Atmiya University
Rajkot

2) Find the torque required to overcome the thread friction (T_1) –

$$T_1 = W \tan\phi + \alpha) \times \frac{d}{2}$$

$$\& T_1 = \frac{\pi}{16} \times \tau \times d_c^3$$

From this eq. find $'\tau'$

As the screwis subjected to both direct tensile stressand torsional shear stress

$i)$ max *imum principle stress*

$$\sigma_{t(\max)} = \frac{1}{2}[\sigma_t + \sqrt{\sigma_t^2 + 4\tau^2}]$$

$ii)$ max *imum shear stress*

$$\tau_{\max} = \frac{1}{2}[\sqrt{\sigma_t^2 + 4\tau^2}]$$

For safety

$$\sigma_{t(\max)} \le \sigma_t \,\&\, \tau_{\max} \le \tau$$

Atmiya University Rajkot

3) <u>Design of nut</u> -

a) Find the Height of nut by considering bearing pressure –

$$P_b = \frac{W}{\frac{\pi}{4}(d_o^2 - d_c^2) \times n}$$

$Find\ 'n'$

$For\ providing\ good\ stability\ \&\ avoid\ tearing$

$Taken' = n + 2$

$height\ of\ nut = n' \times p$

$Width\ of\ nut = b_1 = 1.5\, d_o$

Atmiya University Rajkot

b) Check the stresses induced in nut and screw thread

$$Shear\ stress\ in\ screw = \tau_s = \frac{W}{\pi\, d_c\, t \times n}$$

$$Shear\ stress\ in\ nut = \tau_n = \frac{W}{\pi\, d_o\, t \times n}$$

Atmiya University
Rajkot

4) <u>Calculate length of screw portion</u> –

Length of screw = dist. between the centered line of nut when toggle jack at the top position + thickness of nut + (2 x thickness of ring)

Atmiya University
Rajkot

5) <u>Design of Pins</u> –

The pins are design under double shear.

$$\tau_p = \frac{F}{2A}$$

$$\tau_p = \frac{F}{2 \times \frac{\pi}{4} \times d_p^2}$$

$$Where, d_p = diameter\ of\ pin$$

$$\tau_p = Shear\ stress\ for\ pin$$

Atmiya University Rajkot

THE END

Atmiya University
Rajkot

Atmiya University
Faculty of Engineering & Technology
Department of Mechanical Engineering
M.Tech.

Industry 5.0 - QUESTION BANK

UNIT 1 **INDUSTRY 5.0 AND HUMAN-ROBOT CO-WORKING**

1. Explain Need, scope, importance and application of IOT,
2. Describe Factory of things (FOT)
3. Big Data, Machine learning,
4. 6R principle,
5. waste prevention,
6. Evolution from Industry 1.0 to 5.0
7. Prospects of society 5.0,
8. advantages of I5.0 in manufacturing,
9. Economical factor, Lean innovation method for I 5.0
10. Three dimensional design in eco-system,
11. Advantages of a machine workface & collaborative man,
12. Plant Safety and Security (Including AR and VR safety applications),
13. Logistics 4.0 and
14. smart supply chain management in Industry 5.0

Unit 2 **ROBOTICS & AUTOMATION**

15. What is the difference between robotics and automation?
16. How do robots perceive their environment?
17. What are the main components of a robotic system?
18. Can you explain the concept of closed-loop control in robotics?
19. How are industrial robots programmed?
20. What are the advantages of using robots in manufacturing?
21. What challenges do roboticists face in achieving human-like dexterity in robots?
22. How do collaborative robots (cobots) differ from traditional industrial robots?
23. What is the role of artificial intelligence in robotics?
24. How are robots used in healthcare applications?
25. What ethical considerations should be taken into account in the development of autonomous robots?
26. How do robotic exoskeletons assist individuals with mobility impairments?
27. What is the significance of swarm robotics in multi-robot systems?
28. Can you explain the concept of Industry 4.0 and its impact on automation?
29. How do robots learn and adapt to new tasks?
30. What are the key challenges in the development of autonomous vehicles?
31. How is automation changing the job market and workforce dynamics?
32. What is the role of sensors in robotic systems?

Atmiya University Rajkot

33. How do robots navigate and avoid obstacles in unstructured environments?
34. What advancements are being made in soft robotics?
35. How does the integration of Internet of Things (IoT) technology enhance automation processes?
36. What are the potential risks associated with widespread adoption of autonomous systems?
37. How are robotics and automation being used in agriculture?
38. What are the implications of using robots in hazardous environments, such as disaster response or nuclear facilities?
39. Can you discuss the impact of robotics on sustainability and environmental conservation?

Unit 3 **ADDITIVE MANUFACTURING**

40. What is additive manufacturing, and how does it differ from traditional manufacturing processes?
41. What are the main advantages of using additive manufacturing in prototyping?
42. How does the layer-by-layer approach in additive manufacturing contribute to its flexibility in design?
43. What types of materials can be used in additive manufacturing processes?
44. What are the key challenges in achieving high-resolution prints in additive manufacturing?
45. How does additive manufacturing impact the production of complex geometries that traditional methods might find challenging?
46. Can you explain the difference between stereolithography (SLA) and fused deposition modeling (FDM) 3D printing technologies?
47. How is additive manufacturing being utilized in the aerospace industry?
48. What role does additive manufacturing play in the medical field, especially in the production of implants and prosthetics?
49. How does the cost-effectiveness of additive manufacturing compare to traditional manufacturing for certain applications?
50. What are the environmental implications of additive manufacturing, especially regarding waste reduction?
51. How is additive manufacturing contributing to the customization of consumer products?
52. What advancements are being made in multi-material and multi-color 3D printing?
53. Can you discuss the importance of software in the additive manufacturing workflow?
54. How is additive manufacturing being applied in the automotive industry, particularly in the production of spare parts?
55. What challenges exist in scaling up additive manufacturing for mass production?
56. How does additive manufacturing impact the supply chain and logistics of manufacturing?
57. What are the considerations for post-processing in additive manufacturing?

Atmiya University Rajkot

58. How is additive manufacturing being used in the construction industry?
59. What role does 3D bioprinting play in tissue engineering and regenerative medicine?
60. Can you explain the concept of hybrid manufacturing and how it combines additive and subtractive processes?
61. How are intellectual property rights and regulations evolving in the context of additive manufacturing?
62. What are the current limitations of additive manufacturing technologies?
63. How is additive manufacturing contributing to sustainable and eco-friendly manufacturing practices?
64. What are the future trends and potential breakthroughs in additive manufacturing?

Unit 4 **APPLICATIONS OF ARTIFICIAL INTELLIGENCE IN MANUFACTURING.**

65. How is artificial intelligence transforming traditional manufacturing processes?
66. What are the key components of AI that are applied in manufacturing?
67. How does machine learning contribute to predictive maintenance in manufacturing equipment?
68. Can you explain the role of AI in optimizing production scheduling and resource allocation?
69. What are the benefits of using AI for quality control and defect detection in manufacturing?
70. How is AI applied in supply chain management to enhance efficiency and reduce costs?
71. What role does AI play in demand forecasting and inventory management in manufacturing?
72. How are autonomous robots utilizing AI in tasks such as material handling and assembly in manufacturing plants?
73. What is the significance of AI in energy management and sustainability within manufacturing facilities?
74. How does AI enhance the customization and personalization of products in manufacturing?
75. Can you discuss the applications of AI in collaborative manufacturing environments, such as human-robot collaboration?
76. How is AI being used in the optimization of production processes to increase efficiency and reduce waste?
77. What are the applications of AI in real-time monitoring and control of manufacturing operations?
78. How does AI contribute to the development of smart factories and Industry 4.0 initiatives?
79. What role does natural language processing (NLP) play in improving communication and coordination in manufacturing?
80. How is AI applied in the design and simulation of manufacturing processes and products?

Atmiya University Rajkot

81. Can you provide examples of how AI is used in preventive maintenance to minimize downtime in manufacturing?
82. What challenges and considerations arise in implementing AI technologies in manufacturing environments?
83. How is AI contributing to workforce optimization and skill development in the manufacturing sector?
84. What security measures are in place to protect AI systems used in manufacturing from cyber threats?
85. Can you discuss the role of AI in facilitating human-machine collaboration in manufacturing?
86. How does AI contribute to the development of digital twins for manufacturing processes?
87. What are the ethical considerations surrounding the use of AI in manufacturing, especially in decision-making processes?
88. How is AI applied in the inspection and testing of manufactured products for quality assurance?
89. What are the potential future developments and trends in the application of AI in manufacturing?

Unit 5 **DIGITAL TWINS IN PRODUCTION**

90. What is the concept of Digital Twins, and how does it apply to production processes?
91. How do Digital Twins contribute to improving the efficiency and effectiveness of production workflows?
92. Can you explain the role of simulation in the development and utilization of Digital Twins in production?
93. What benefits do manufacturers gain from implementing Digital Twins in their production systems?
94. How are Digital Twins utilized in predictive maintenance for production equipment?
95. What challenges are associated with creating and maintaining Digital Twins in a production environment?
96. In what ways do Digital Twins enhance the design and prototyping stages of production?
97. How do Digital Twins support real-time monitoring and control of production processes?
98. Can you provide examples of successful applications of Digital Twins in specific industries or sectors within production?
99. How are Digital Twins integrated into the broader concept of Industry 4.0 and smart factories?
100. What is the significance of data analytics and artificial intelligence in optimizing Digital Twins for production?

Atmiya University Rajkot

101. How do Digital Twins impact supply chain management in the context of production?
102. What security considerations are important when implementing Digital Twins in a production environment?
103. How do Digital Twins contribute to energy optimization and sustainability in production processes?
104. Can you discuss the role of Digital Twins in facilitating collaboration and communication across different stages of production?
105. How do Digital Twins support the customization and personalization of products in production?
106. What is the lifecycle management of Digital Twins, and how do they evolve over time in a production setting?
107. In what ways do Digital Twins align with the goals of continuous improvement in production?
108. How do Digital Twins contribute to risk identification and mitigation in production-related processes?
109. Can you provide insights into the impact of Digital Twins on workforce training and skill development in production?
110. How do Digital Twins align with the principles of lean production and just-in-time manufacturing?
111. What are the implications of Digital Twins for quality control and defect detection in production?
112. Can you discuss examples of how Digital Twins have been successfully implemented in the optimization of specific production processes?
113. What future trends do you anticipate in the application and development of Digital Twins in production?
114. How can companies overcome potential resistance or challenges when implementing Digital Twins in their production systems?

Atmiya University
Rajkot

Atmiya University
Faculty of Engineering & Technology
Department of Mechanical Engineering
B.Tech. Mechanical Engineering

Heat Transfer - QUESTION BANK

UNIT 1 & 2 **Fundamentals of Conduction**

1. What is conduction, and how does it differ from convection and radiation?
2. What is the molecular mechanism behind heat conduction in solids?
3. Can you explain the concept of thermal conductivity and its significance in heat conduction?
4. How is Fourier's Law of Heat Conduction used to describe the rate of heat transfer in a material?
5. What factors influence the thermal conductivity of a material?
6. How does temperature gradient impact heat conduction in a material?
7. Can you discuss the concept of thermal resistance in the context of heat conduction?
8. What are the different modes of heat conduction, and how do they apply to different materials?
9. How is heat conduction affected by the physical properties of a material, such as density and specific heat?
10. Can you provide examples of everyday situations where heat conduction plays a significant role?
11. How does the length of a material affect its thermal conductivity and heat conduction properties?
12. What role does cross-sectional area play in determining the rate of heat conduction through a material?
13. How is the thermal conductivity of composite materials calculated?
14. What is the significance of thermal contact resistance in heat conduction between two materials?
15. Can you explain the concept of thermal diffusivity and its relation to heat conduction?
16. How is heat conduction influenced by boundary conditions, such as insulation or external temperature sources?
17. What are the practical applications of heat conduction in engineering and everyday life?
18. How do different materials conduct heat in electronic devices, and how is this managed in thermal design?
19. Can you discuss the role of fins in enhancing heat conduction in certain applications?
20. What is the importance of understanding heat conduction in the design of energy-efficient buildings?

Atmiya University Rajkot

21. How does heat conduction play a role in the cooling of engines and other mechanical systems?
22. What are the limitations and challenges associated with modeling heat conduction in complex geometries?
23. How is the thermal resistance network used in analyzing heat conduction in composite systems?
24. Can you provide examples of materials with high and low thermal conductivity and explain their applications?
25. What advancements or research are ongoing in the field of heat conduction and thermal management?

Unit 3 **Convection**

26. How does the concept of boundary layers relate to convection, and why is it important?
27. Can you provide examples of natural convection occurring in everyday situations?
28. What engineering applications heavily rely on forced convection for heat transfer?
29. How does convection impact the overall thermal performance of a system?

Forced Convection:

30. What is the role of a heat exchanger in forced convection, and how does it enhance heat transfer?
31. How are convective heat transfer coefficients affected by the geometry of a surface in forced convection?
32. Can you explain the significance of Reynolds and Nusselt numbers in forced convection analysis?
33. What challenges are associated with predicting and modeling forced convection in complex systems?

Natural Convection:

34. How does natural convection occur, and what factors influence its intensity?
35. Can you discuss the concept of the Grashof number and its importance in natural convection?
36. What are the key differences between laminar and turbulent natural convection?
37. How is the Rayleigh number used in the analysis of natural convection?

Mixed Convection:

38. What is mixed convection, and how does it combine aspects of both natural and forced convection?
39. How do different parameters, such as the Richardson number, affect mixed convection heat transfer?

Practical Applications:

40. How is convection utilized in heating, ventilation, and air conditioning (HVAC) systems?

Aniya University Rajkot

41. What role does convection play in cooking processes, such as boiling and baking?
42. Can you discuss how convection is applied in the cooling of electronic devices and systems?
43. How does convection contribute to weather patterns and atmospheric circulation on Earth?
44. In what ways is convection used in industrial processes for heat transfer?

Unit 4 **Radiation**

Basic Concepts of Thermal Radiation:

45. What is thermal radiation, and how does it differ from other modes of heat transfer?
46. Can you explain how thermal radiation is related to the electromagnetic spectrum?
47. How is thermal radiation emitted, absorbed, and transmitted by objects?

Emissivity and Radiative Properties:

48. What is emissivity, and how does it influence the radiative properties of a material?
49. Can you discuss the concept of spectral emissivity and its importance in understanding material behavior?

Radiative Heat Transfer Laws:

50. How is the Stefan-Boltzmann Law used to calculate the total power radiated by an object?
51. What is the significance of the Stefan-Boltzmann constant in radiative heat transfer calculations?
52. Can you explain how the Stefan-Boltzmann Law is applied in engineering and thermal design?

Kirchhoff's Law and Detailed Balance:

53. What is Kirchhoff's Law of thermal radiation, and how does it relate to emissivity and absorptivity?
54. Can you discuss the concept of detailed balance in the context of thermal radiation?

View Factors and Radiation Exchange:

55. What are view factors, and how are they used in radiative heat exchange between surfaces?
56. How does the configuration factor contribute to the analysis of radiation exchange in complex geometries?

Engineering Applications:

57. How is thermal radiation used in heating applications, such as infrared heating systems?

Atmiya University Rajkot

58. Can you discuss the role of thermal radiation in processes like annealing and heat treatment in industry?
59. How is thermal radiation considered in the design of solar collectors and photovoltaic systems?

Unit 5 **Heat Exchanger and Two Phase Heat Transfer**

Heat Exchangers:

60. What is the primary purpose of a heat exchanger in thermal systems?
61. Can you explain the basic operating principles of a shell-and-tube heat exchanger?
62. How are heat exchangers classified based on their flow arrangements and construction?
63. What factors influence the selection of materials for heat exchanger tubes?
64. How is heat transfer enhanced in compact heat exchangers, and what are their advantages?
65. Can you discuss the impact of fouling on heat exchanger performance and efficiency?
66. What is the role of fins in enhancing heat transfer in air-cooled heat exchangers?
67. How are plate heat exchangers different from shell-and-tube heat exchangers in terms of design and efficiency?
68. What challenges are associated with the maintenance and cleaning of heat exchangers in industrial settings?
69. Can you discuss the application of heat exchangers in refrigeration and air conditioning systems?

Two-Phase Heat Transfer:

70. What is two-phase heat transfer, and how does it differ from single-phase heat transfer?
71. Can you explain the concept of boiling and how it is utilized in two-phase heat transfer?
72. How is the heat transfer coefficient affected during the process of boiling or condensation?
73. What are the different boiling regimes, and how do they influence heat transfer rates?
74. Can you discuss the factors influencing the critical heat flux in boiling heat transfer?
75. How does the choice of working fluid impact the performance of two-phase heat exchangers?
76. What is condensation, and how is it employed in industrial heat exchange processes?
77. How do flow patterns, such as annular flow and slug flow, influence two-phase heat transfer?

Atmiya University Rajkot

78. Can you discuss the challenges and considerations in the design of evaporators for refrigeration systems?
79. What is the significance of capillary-driven two-phase heat transfer in microgravity environments?

Advanced Topics:

80. How is miniaturization and microscale heat transfer applied in two-phase cooling systems?
81. Can you discuss the concept of phase-change materials (PCMs) and their application in latent heat storage?
82. What is the role of computational fluid dynamics (CFD) in optimizing the performance of two-phase heat exchangers?
83. How are nanofluids utilized to enhance heat transfer performance in two-phase systems?
84. Can you provide examples of innovative applications or emerging technologies in two-phase heat transfer?

Research and Future Trends:

85. What ongoing research is being conducted to improve the efficiency and sustainability of heat exchangers and two-phase heat transfer?
86. How might advancements in materials science contribute to the development of more efficient heat exchange systems?
87. What role does artificial intelligence play in optimizing the design and operation of heat exchangers?

Atmiya University
Rajkot

Atmiya University
Faculty of Engineering & Technology
Department of Mechanical Engineering
M.Tech. Mechanical

Product Design & Reliability - QUESTION BANK

UNIT 1 **Product Design**

1. How do you define the target audience and user needs when starting a product design project?
2. What methodologies do you employ for brainstorming and generating innovative design ideas?
3. Can you discuss the importance of empathy in understanding user experiences during the design process?
4. How do you balance functionality and aesthetics in the initial stages of product ideation?
5. What steps do you take to gather and incorporate user feedback throughout the design process?
6. How do you conduct user testing to ensure that a product meets the usability requirements of its intended users?
7. Can you discuss the role of prototyping in refining and validating design concepts with users?
8. What is your approach to problem-solving within the context of product design?
9. Can you share an example of a challenging design problem you've encountered and how you addressed it?
10. How do you balance user needs, business goals, and technical constraints in the design process?
11. How do you select materials for a product, considering factors like durability, cost, and sustainability?
12. Can you discuss the importance of manufacturability in product design, and how do you optimize for it?
13. What considerations are taken into account when choosing between different manufacturing processes for a specific product?
14. How do you approach incorporating new technologies or innovations into the design of a product?
15. Can you provide an example of a product you've designed that involved integrating cutting-edge technology?
16. In what ways do you consider sustainability in the design of products, from material selection to end-of-life considerations?
17. How do you balance the desire for sustainable practices with other design constraints, such as cost and performance?
18. How do you ensure that a product's design aligns with the overall brand identity and market positioning?
19. Can you discuss the role of aesthetics and visual appeal in influencing consumer perception and adoption of a product?

Atmiya University Rajkot

20. What does your iterative design process look like, and how do you manage changes and refinements throughout a project?
21. How do you approach design iteration based on user feedback and usability testing results?
22. What ethical considerations are taken into account during the design process, especially when designing products that impact users' lives?
23. How do you stay informed about current design trends, and how do they influence your design decisions?
24. What future trends in product design do you anticipate will have a significant impact on the industry?

Unit 2, 3 **Product Manufacturing, Costing**

25. What factors influence the choice of manufacturing processes for a specific product?
26. Can you discuss the role of design for manufacturability in the product development process?
27. How do you optimize the production workflow to ensure efficiency and minimize production time?
28. What challenges are commonly encountered in scaling up production from prototypes to mass manufacturing?
29. Can you provide examples of lean manufacturing principles applied to product production?
30. How do you approach the selection of materials for a product with considerations for cost, performance, and sustainability?
31. What strategies do you use to manage the sourcing of raw materials and components to minimize costs and ensure quality?
32. How do you conduct a comprehensive cost analysis for a product, considering both direct and indirect costs?
33. Can you discuss the importance of accurate cost estimation in maintaining profitability throughout the product lifecycle?
34. What tools or methodologies do you use for cost modeling and budgeting in product manufacturing?
35. How is the supply chain optimized to minimize costs and ensure a smooth flow of materials and components?
36. What considerations are taken into account when selecting suppliers, especially in terms of cost, reliability, and quality?
37. Can you discuss strategies for managing supply chain disruptions and mitigating associated risks?
38. How do you implement quality control measures to ensure that products meet specified standards and requirements?
39. Can you discuss the role of statistical process control in maintaining product quality during manufacturing?
40. How do you balance the use of manual labor and automation in manufacturing to optimize costs?

Ramiya University Rajkot

41. Can you discuss the impact of Industry 4.0 technologies on the manufacturing process and cost structure?
42. What strategies do you employ to identify and implement cost reduction opportunities in manufacturing?
43. How is value engineering used to optimize product functionality while reducing manufacturing costs?
44. How do you approach life cycle costing to evaluate the total cost of a product from conception to disposal?
45. Can you discuss the importance of considering maintenance and repair costs in life cycle cost analysis?
46. In what ways do you incorporate environmental considerations into the manufacturing process to minimize ecological impact?
47. How are social responsibility and ethical manufacturing practices addressed in the overall costing strategy?

Unit 4 **Value Engineering**

48. What is value engineering, and how does it differ from cost-cutting or cost reduction?
49. Can you explain the fundamental principles of maximizing value while minimizing cost in value engineering?
50. How does value engineering contribute to the overall product development and design process?
51. What are the key steps involved in the value engineering process?
52. How is the multidisciplinary approach utilized in value engineering, involving different stakeholders in the process?
53. Can you provide examples of tools and methodologies commonly used in value engineering workshops?
54. How do you define and identify the core functions and performance requirements of a product or system?
55. Can you discuss the importance of understanding customer needs and expectations in value engineering?
56. What role do functional analysis and functional performance play in identifying areas of value?
57. How is cost analysis conducted in value engineering, and what factors are considered in cost evaluation?
58. Can you discuss the concept of "worth" and how it is determined in the context of value engineering?
59. What are some challenges and considerations in assessing the true cost of a product or system?
60. How does value engineering encourage creativity and innovation in the design and development process?
61. Can you share examples of how creative solutions were generated through value engineering initiatives?
62. What challenges may arise during the implementation of value engineering recommendations, and how can they be addressed?

Atmiya University Rajkot

63. How is the collaboration between different departments and teams managed during the execution of value engineering changes?
64. How can value engineering be integrated into the initial stages of the design and development process?
65. Can you discuss the role of value engineering in optimizing product functionality without compromising quality?
66. How does value engineering contribute to the concept of continuous improvement in product development?
67. Can you provide examples of how value engineering principles are applied in ongoing projects to refine and enhance value?
68. What role does risk analysis play in value engineering, especially in identifying potential risks associated with cost reduction measures?
69. Can you discuss strategies for mitigating risks while implementing value engineering changes?
70. In what ways can value engineering contribute to environmentally sustainable product design and development?
71. How are life cycle assessments integrated into the value engineering process to consider long-term environmental impacts?
72. Can you share examples of successful value engineering applications in specific industries, such as automotive, aerospace, or construction?

Unit 5**. Design for Reliability, Reliability Determination and Prediction**

73. What is "Design for Reliability," and how does it differ from traditional design approaches?
74. How can design principles be integrated to enhance the reliability of a product or system?
75. Can you discuss the importance of early-stage reliability considerations in the design process?
76. What strategies are employed in designing for reliability without compromising other design goals?
77. How do environmental factors and usage conditions influence the design decisions for reliability?
78. What methods are commonly used to determine the reliability of a product or system?
79. Can you explain the concept of reliability testing and its role in assessing product performance?
80. How is accelerated life testing used to predict the reliability of a product over an extended period?
81. What statistical techniques are applied in reliability analysis, and how are they interpreted?
82. How are reliability prediction models developed, and what factors do they typically consider?
83. Can you discuss the use of reliability block diagrams in modeling complex systems?
84. What role do failure modes and effects analysis (FMEA) and fault tree analysis (FTA) play in reliability prediction?

Atmiya University Rajkot

85. How are physics of failure models employed to predict the long-term reliability of components?
86. Can you provide examples of reliability prediction models applied in different industries?
87. What are the key factors that influence the reliability of electronic components in a product?
88. How does the selection of materials impact the reliability of mechanical components?
89. Can you discuss the role of manufacturing processes in determining the reliability of a product?
90. How do software design and coding practices contribute to the reliability of software-based systems?
91. What considerations are important for ensuring the reliability of systems in harsh or extreme environments?
92. How is life data analysis used to model and predict the reliability of products over time?
93. Can you discuss the significance of failure data collection and analysis in reliability engineering?
94. What types of reliability distributions are commonly used in life data analysis?
95. How does the design for reliability influence maintenance requirements and strategies?
96. Can you explain the principles of reliability-centered maintenance and its application in industry?
97. What challenges and considerations arise when implementing reliability-centered maintenance practices?
98. How does reliability engineering intersect with quality assurance practices in product development?
99. Can you discuss the relationship between reliability, durability, and product quality?
100. How do industry standards and regulations guide the reliability requirements for specific products or systems?
101. Can you provide examples of industries where adherence to reliability standards is critical?
102. How do human factors and user behaviors impact the reliability of products and systems?
103. Can you discuss strategies for designing products that are both reliable and user-friendly?

Atmiya University Rajkot

INTRODUCTION TO MECHANICAL VIBRATIONS (THEORY & PROBLEMS)

Dynamics of Machines (DOM)

(18BTMECC501)

Unit No.2

Introduction to Mechanical Vibrations

Prepared By:- Shivang S. Jani

Asst. Professor

Mechanical Engineering Department

Concept of Simple Harmonic Motion

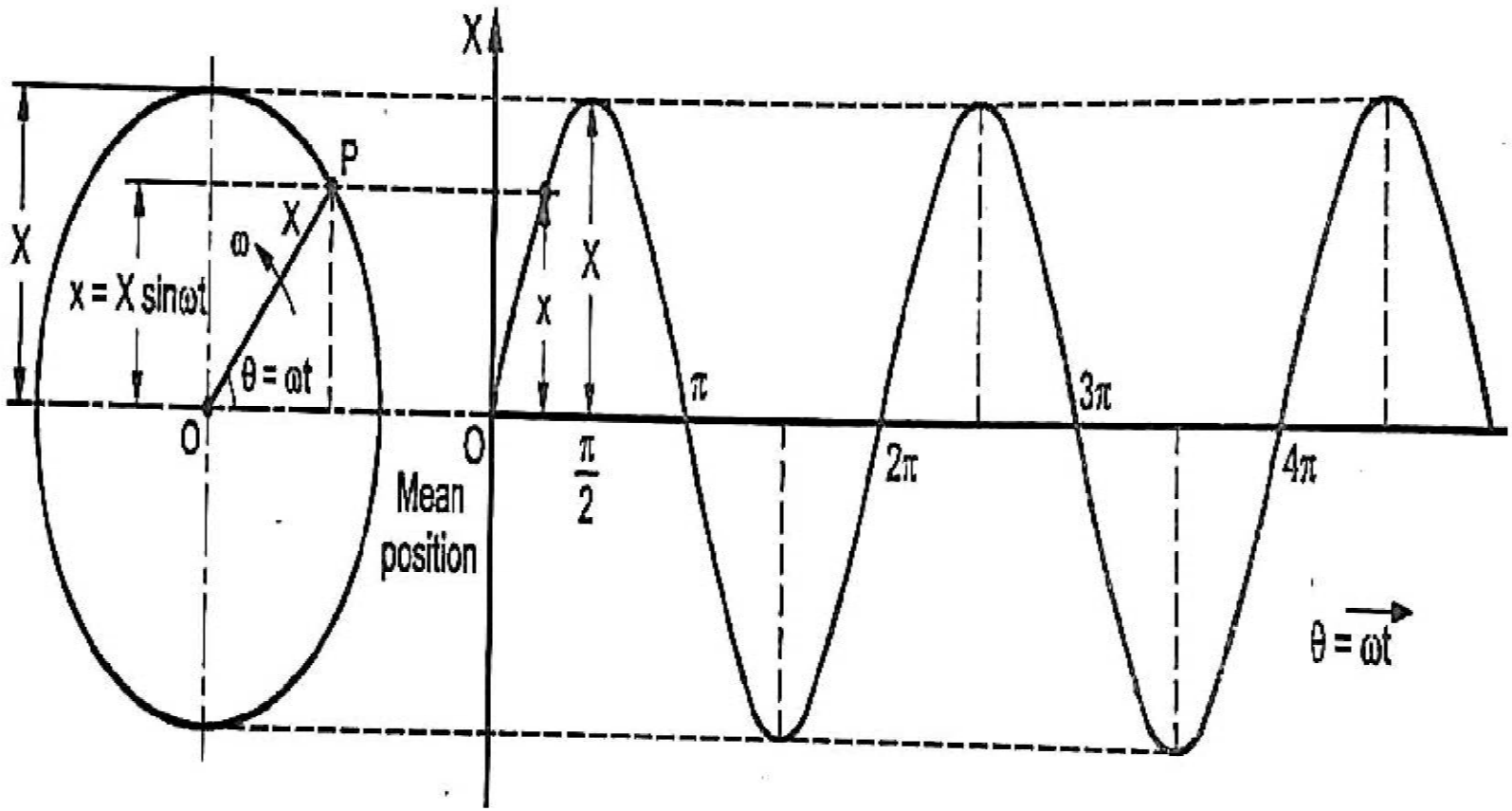

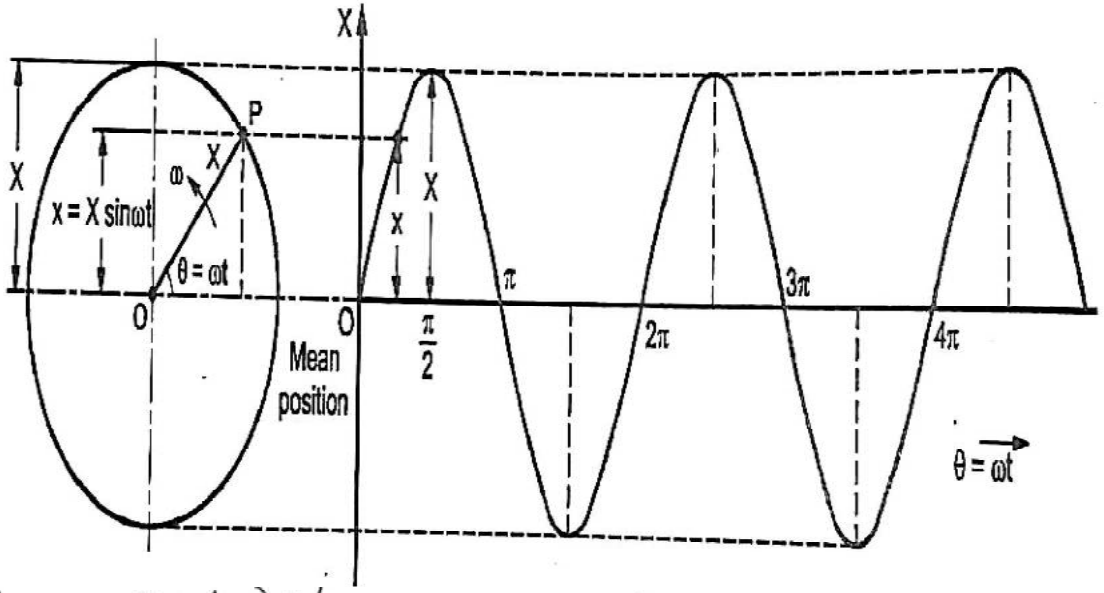

→ Consider a point 'P' moving around a circle with an angular speed 'ω' as shown in fig. above.

→ Let, x or x = Displacement of a point from mean position after time 't'.

X = Maximum displacement of point from mean position.

→ From above figure,

Displacement of point after time 't' is,

$$x = X \sin\theta$$

$$\therefore \boxed{x = X \sin\omega t} \quad - (1)$$

Atmiya University Rajkot

→ Velocity of Point after time 't' is,

$$\frac{dx}{dt} = \dot{x} \quad \text{(or)} \quad \dot{x} = \omega X \cos\omega t$$

→ Acceleration of Point after time 't',

$$\frac{d^2x}{dt^2} = \ddot{x} \quad \text{(or)} \quad \ddot{x} = -\omega^2 x \quad (\because \ddot{x} = -\omega^2 X \sin\omega t)$$

$$\therefore \boxed{\ddot{x} = -\omega^2 x} \quad - (2)$$

→ From equation (2), it can be seen that, the acceleration is directly Propostional to the displacement from mean Position. Such a motion, whose acceleration is Propostional to displacement from mean Position & is directed towards the mean Position, is known as Simple Harmonic Motion (SHM).

Atmiya University Rajkot

→ The equation (2) can be written as,

$$\boxed{\ddot{x} + \omega^2 x = 0} \quad - (3)$$

→ The equation (3) is known as Fundamental equation of Simple Harmonic motion.

Types of Vibration

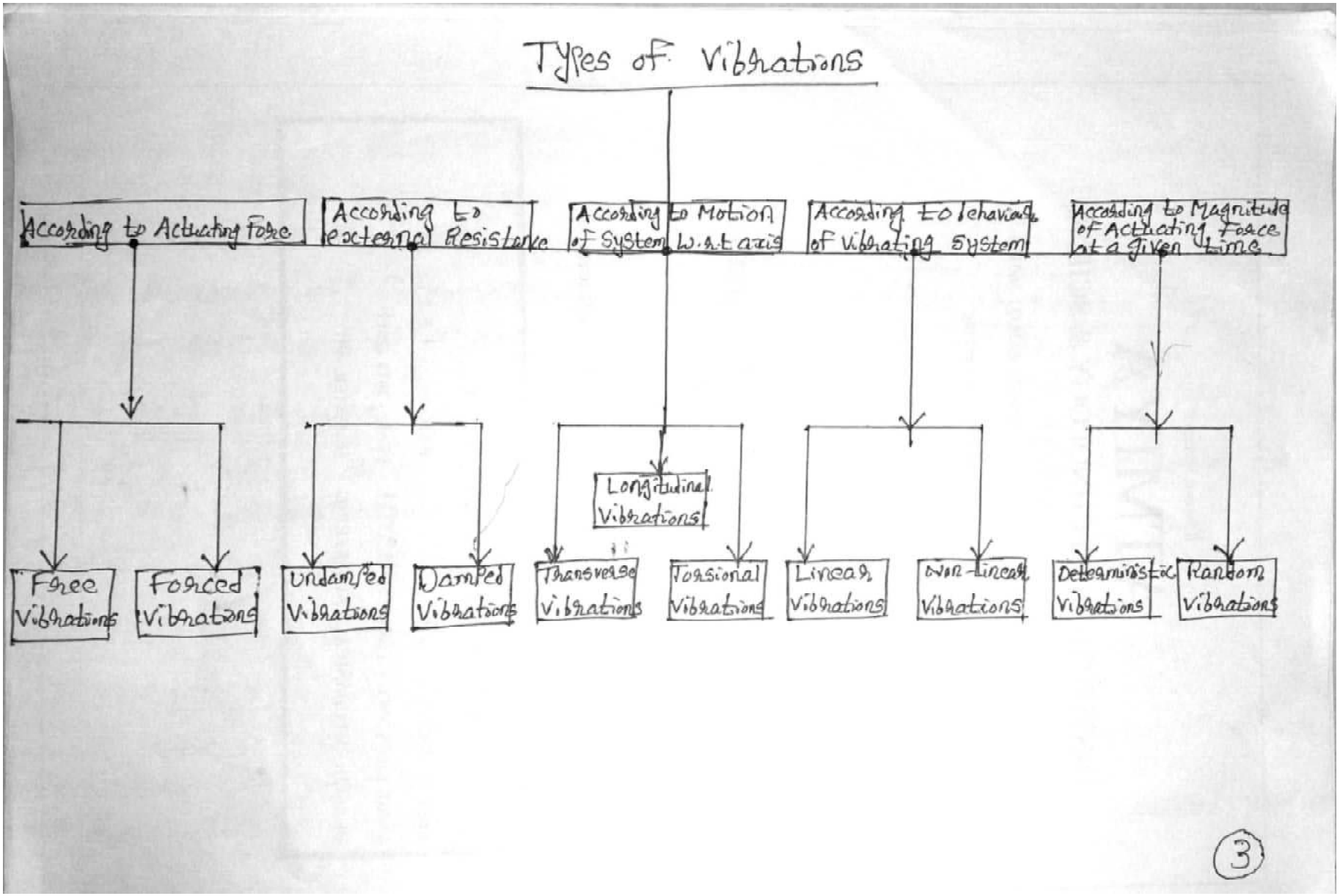

(1) According to Actuating Force.

(i) Free vibrations

→ If the external force is removed after giving an initial displacement to the system, then the system vibrates on its own due to internal elastic forces. Such type of vibrations are known as free vibrations.

→ The frequency of free vibrations is known as free or natural frequency (f_n)

→ E.g – oscillation of simple pendulum is an example of free vibrations.

(ii) Forced vibrations

→ If a system or a body is subjected to a periodic external excitation force, then the resulting vibrations are known as forced vibrations.

→ E.g – vibrations of I.C engine, electric motor, centrifugal pump etc.

Atmiya University Rajkot

(2) According to External Resistance

(i) Undamped Vibrations

→ If there is no external resistance to the vibration of a system, then such vibrations are known as undamped vibrations

→ The negligible resistance (damping) is also considered as an undamped condition

→ E.g - In case of simple pendulum is an example of undamped free vibrations.

→ Theoretically, the free undamped vibrations continue indefinitely because there is no external resistance (damping), but the amplitude of vibrations decay continuously & vanishes ultimately. because of some negligible air resistance (air damping).

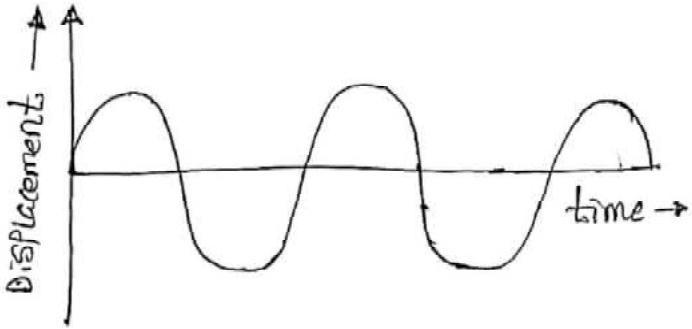

(a) Undamped vibrations

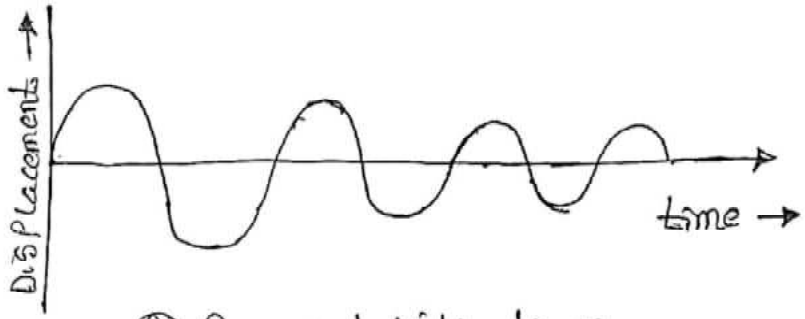

(b) Damped Vibrations

Atmiya University Rajkot

(ii) Damped Vibrations

→ If an external resistance is provided to the vibrating system, then such vibrations are known as damped vibrations

→ In damped vibrations. the external resistance, known as damping, opposes the vibrations. Due to this there is reduction in amplitude of vibration every cycle & eventually vibrations die out.

→ Such vibrations are also known as transient vibrations

→ E.g - vehicle moving over a rough road with shock absorber.

(3) According to Motion of System with respect to Axis

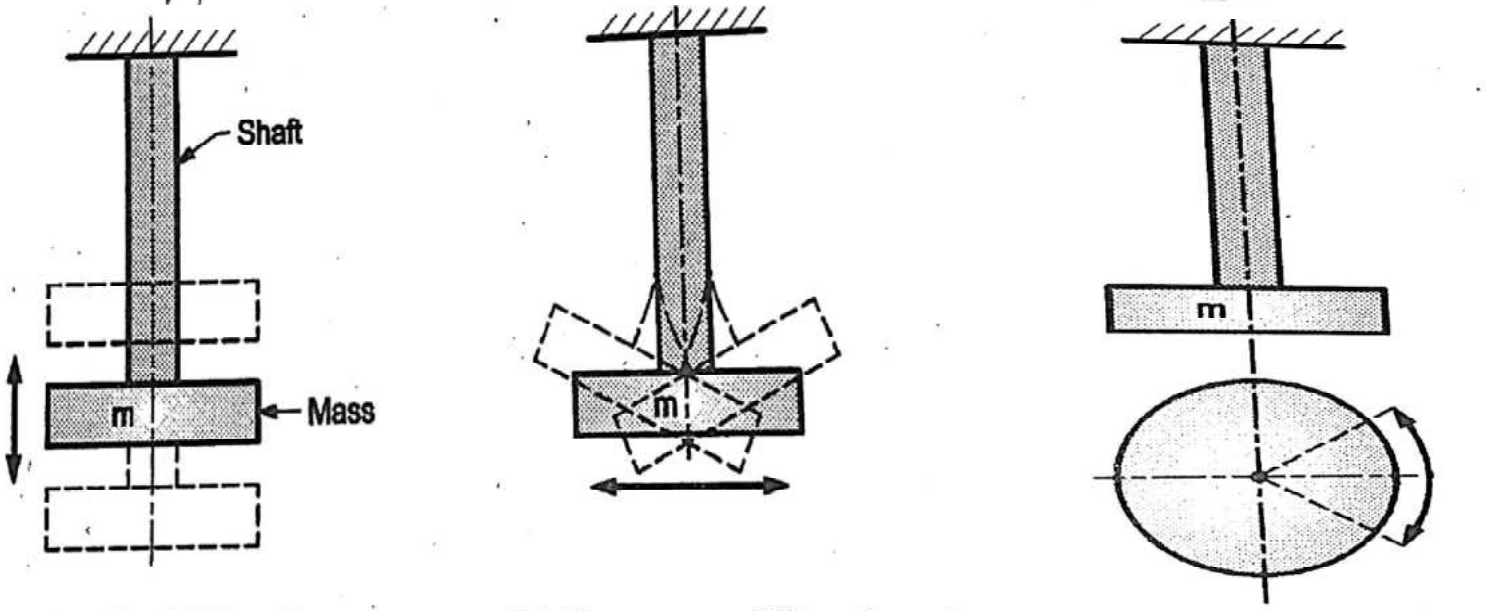

(a) Longitudinal Vibrations (b) Transverse Vibrations (c) Torsional Vibrations

Atmiya University Rajkot

(1) Longitudinal vibrations

→ If the disc moves up + down along the axis of shaft, then the vibrations are known as longitudinal vibrations.

→ In longitudinal vibrations, the shaft is subjected to alternate direct tensile & compressive stresses.

→ Another example of longitudinal vibrations is ~~known as~~ vibrations of spring-mass system along the axis of spring.

(ii) Transverse vibrations

→ If the disc moves approximately perpendicular to the axis of shaft, then the vibrations are known as transverse vibrations.

→ In transverse vibrations, the shaft is subjected to alternate bending stresses

(iii) Torsional vibrations

→ If the disc rotate about the axis of shaft, such that the shaft gets twisted & untwisted alternately, then the vibrations are known as torsional vibrations

→ In torsional vibrations, the shaft is subjected to torsional shear stresses

Atmiya University Rajkot

According to behaviour of vibrating system

(i) Linear vibrations

→ In a vibrating system, if basic components i.e spring, mass & damper, behave linearly then the resulting vibrations are known as linear vibrations

→ In linear vibrations, the differential equation governing the motion of the vibrating system is linear.

→ Eg - vibration of spring - mass system along the axis of system

→ (ii) Non - Linear Vibrations

→ If any of the three basic Components of the vibrating System behave non-Linearly, then the resulting vibrations are known as Non-Linear vibrations.

→ In non-Linear vibrations, the differential equation governing the motion of the vibrating System is non-Linear.

→ E.g - Motion of spring-mass System in transverse direction (along the direction perpendicular to the axis of System)

(5) According to Magnitude of Actuating force at a given time

(i) Deterministic vibration

→ If the magnitude of the external excitation force acting on a vibrating system is known at any given time, then the excitation is known as deterministic, & the resulting vibrations are known as determinsitic vibrations.

→ The characteristic curve for such vibrations is shown in fig. (a)

→ E.g - Vibrations caused by rotating unbalanced mass.

Atmiya University Rajkot

(ii) Random Vibration

→ If the magnitude of the external excitation force acting on a vibrating system cannot be predicted at any given time, then the excitation is known as non-deterministic or random & the resulting vibrations are known as random vibrations.

→ The characteristic curve for such vibrations is known in fig. (b)

→ E.g - Due to earthquake a building is subjected to random vibrations.

Atmiya University Rajkot

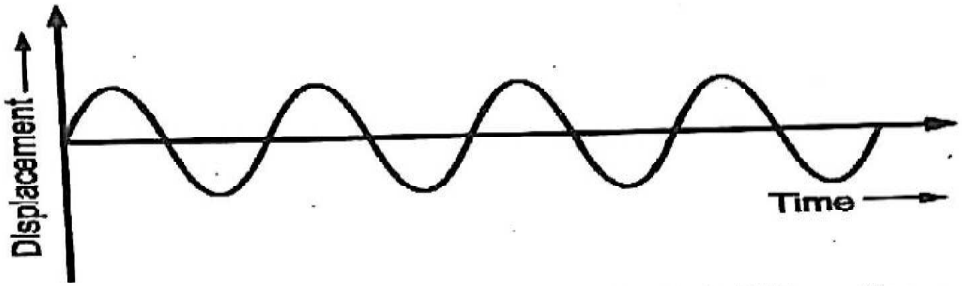

(a) Deterministic (Periodic) Vibrations

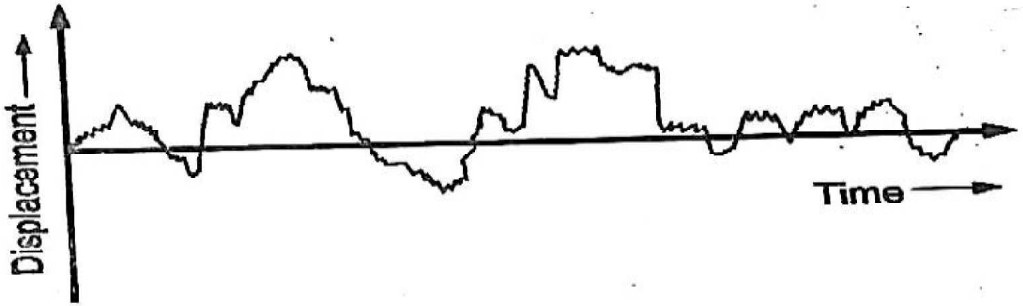

(b) Random Vibrations

Undamped Free Vibration

* INTRODUCTION:-

→ If the external force is removed after giving an initial displacement to the system, then the system vibrates on its own due to internal elastic forces. Such vibrations are known as free vibrations; & if there is no external artificial Resistance (damping) to the vibrations then such vibrations are known as undamped free vibrations

→ It is important to note that, in most of the free vibrations there is always certain amount of damping (like air resistance) associated with the system. If it is small, it can be neglected which in turn considered to be undamped free vibrations.

→ When the frequency of external excitation force acting on a body is equal to the natural frequency of a vibrating body, the amplitude of vibrations becomes excessively large. Such state of condition is known as resonance. To avoid resonance condition, design should know the natural frequency of machine or its parts which are subjected to external excitation force.

Determination of Natural Frequency

→ The natural frequency of any body or a system depends upon the geometrical parameters & mass properties of the body. It is independent of the forces acting on the body or a system

→ There are various methods to obtain the equations of motion of a vibrating system, which can be used to find the natural frequency of an given vibratory system.

→ Methods of finding the natural frequency of vibratory system :-

1. Equilibrium Method (D'Alembert's Principle)
2. Energy Method
3. Rayleigh's Method.

→ (1) Equilibrium Method (D'Alembert's Principle)

→ According to D'Alembert's Principle, a body or a system which is not in static equilibrium due to acceleration it possesses, can be brought to static equilibrium by introducing the inertia force on it.

Equilibrium Method

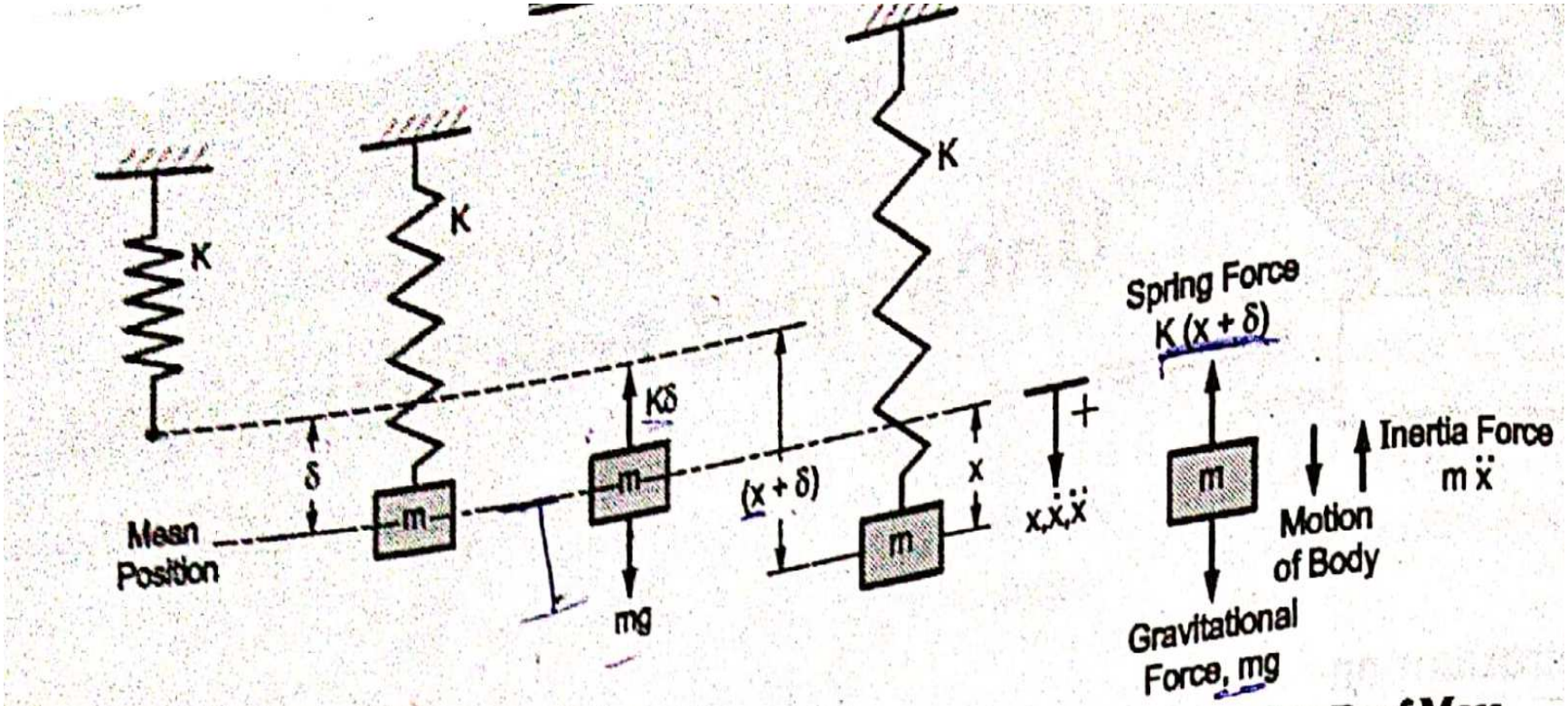

(a) Spring in Unstrained Position

(b) Spring in Strained Position

(c) F.B.D. of Mass at Mean Position

(d) Displaced Position

(e) F.B.D. of Mass at Displaced Position

$\ddot{x} = \frac{d^2x}{dt^2}$

Equilibrium Method

→ This inertia Force is equal to the mass times the acceleration & its direction is opposite to that of acceleration.

→ Hence, in a vibratory system the algebraic sum of the inertia forces & all external forces acting on the system must be equal to zero.

→ This principle is used for developing the equation of motion for vibrating system which is further used to find the natural frequency of the vibrating system.

→ Consider a spring-mass system constrained to move along the axis of the spring as shown in fig.

Atmiya University Rajkot

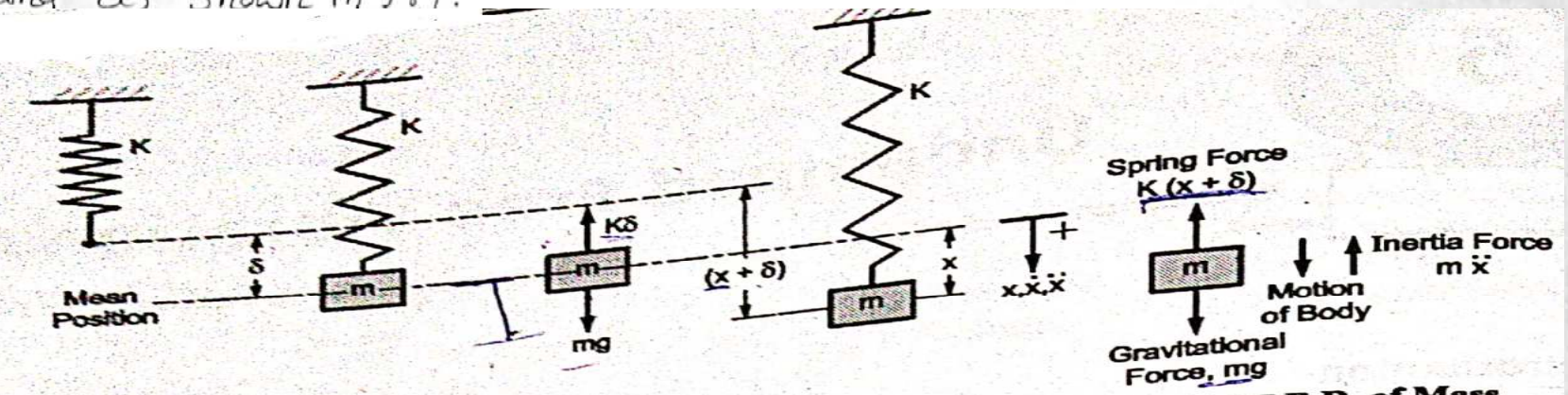

(a) Spring in Unstrained Position

(b) Spring in Strained Position

(c) F.B.D. of Mass at Mean Position

(d) Displaced Position

(e) F.B.D. of Mass at Displaced Position

$\ddot{x} = \frac{d^2x}{dt^2}$

Equilibrium Method

→ Let,

m = Mass suspended from the spring end, kg

K = Stiffness of the spring, N/m

δ = Deflection of the spring due to weight mg, m

x = Displacement given to the mass, ~~due to weight mg~~ ~~m~~. by application of initial external force, from mean position, m.

→ A spring of negligible mass, in an unstrained position, is shown in Fig. (a)

→ When mass 'm' is attached to the free end of spring, it will deflect by 'δ' due to gravitational force 'mg' (Fig. (b)).

→ The F.B.D of mass at equilibrium (mean) position is shown in Fig (c)

→ The gravitational force must be equal to spring force.

$$\boxed{mg = K\delta} \quad \text{— (a)}$$

→ Let, the spring + mass system is subjected to one time initial external force, due to which it will be displaced by 'x' from the mean position as shown in fig. (d).

→ The FBD of mass at the displaced position is shown in Fig. (e).

Atmiya University Rajkot

→ The forces acting on the mass are :-

(i) Inertia force, $m\ddot{x}$ (upwards)

(ii) Spring force or restoring force, $k(x+\delta)$ (upwards)

(iii) Gravitational force, mg (downwards)

→ According to D'Alembert's Principle

$$\sum [\text{Inertia Force} + \text{External Forces}] = 0$$

$\therefore$ $m\ddot{x} + k(x+\delta) - mg = 0$. [Taking upward forces at +ve & downward forces as −ve]

Atmiya University Rajkot

$\therefore$ $m\ddot{x} + kx + k\delta - mg = 0$

$\therefore$ $m\ddot{x} + kx = 0$ [$mg = k\delta$ from eqn. (a)]

$$\therefore \boxed{\ddot{x} + \frac{k}{m}x = 0} \quad \text{— (1)}$$

→ We know that, the fundamental equation of simple Harmonic motion is,

$$\boxed{\ddot{x} + \omega_n^2 x = 0} \quad \text{— (b)}$$

→ Comparing eqn. (1) & (b), we get,

$$\boxed{\omega_n^2 = \frac{K}{m}} \quad \text{or} \quad \boxed{\omega_n = \sqrt{\frac{K}{m}}} \text{ rad/sec} \quad -(2)$$

Where, ω_n = circular natural frequency, rad/sec.

→ The natural frequency 'f_n' of vibrations is,

$$\boxed{f_n = \frac{\omega_n}{2\pi}} \quad \text{or} \quad \boxed{f_n = \frac{1}{2\pi}\sqrt{\frac{K}{m}}} \text{ Hz} \quad -(3)$$

Atmiya University Rajkot

→ From eqn. (a),

$$mg = K\delta \Rightarrow \frac{K}{m} = \frac{g}{\delta} \quad -(c)$$

→ Substituting eqn. (c) in equation (1), we get,

$$\boxed{f_n = \frac{1}{2\pi}\sqrt{\frac{g}{\delta}}} \text{ Hz} \quad -(4)$$

→ The time period 't_p' is,

$$\boxed{t_p = \frac{1}{f_n} = \frac{1}{\frac{1}{2\pi}\sqrt{\frac{K}{m}}}} \quad \text{or} \quad \boxed{t_p = 2\pi\sqrt{\frac{m}{K}}} \text{ Sec.} \quad -(5)$$

Energy Method

(2) Energy Method

→ According to Law of conservation of energy, the energy can neither be created nor be destroyed, but it can be converted from one form to another form.

→ Using this law the equation of motion of vibrating system can be developed.

→ In free undamped vibrations, no energy is transferred to the system or from the system, therefore the total mechanical energy i.e the sum of Kinectic Energy (K.E) & Potential Energy (P.E) remains constant.

→ The K.E is due to the motion of the body or system.

→ The P.E consists of two parts :-

(i) Gravitational Potential Energy :-

→ Due to the position of the body or system with respect to equilibrium or mean position.

(ii) Strain Energy :- Due to the elastic deformation of the body or system

→ At equilibrium (or mean) position, the K.E is maximum & Potential Energy (P.E) is 'zero', whereas at extreme positions, the K.E is 'zero' and Potential Energy (P.E) is maximum

→ According to law of conservation of energy,

Total energy = Constant

i.e. $K.E + P.E = \text{Constant}$ — (1)

→ Differentiating eqn. (1), w.r.t 't',

$$\frac{d}{dt}(K.E + P.E) = 0 \quad \text{— (2)}$$

→ Considering the spring-mass system as shown in fig. below,

Atmiya University Rajkot

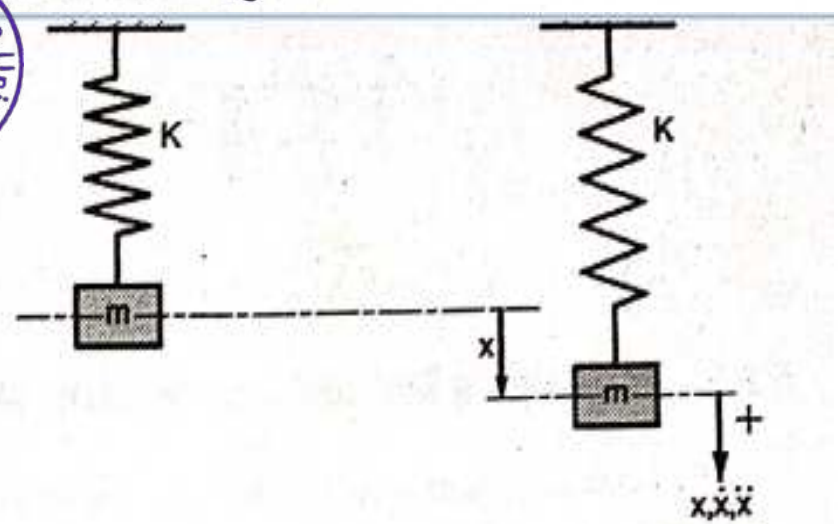

(a) Mean or Equilibrium Position (b) Displaced Position

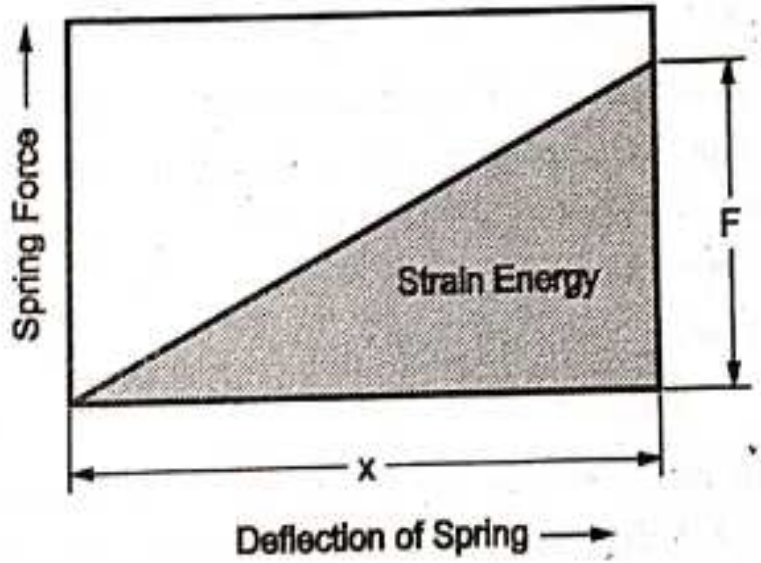

→ K.E of the system is given by,

$$\boxed{K.E = \frac{1}{2} m \dot{x}^2} \quad - (3)$$

→ The P.E is in the form of strain energy stored in the spring.

→ The strain energy is given by the area under the force versus deflection diagram for a spring (show before).

→ ∴ P.E = Strain Energy = Area under force - deflection diagram

$$= \frac{1}{2} F x = \frac{1}{2} (Kx) \cdot x$$

$$\boxed{P.E = \frac{1}{2} K x^2} \quad - (4)$$

→ Substituting equations (3) + (4) in equation (2), we get

$$\frac{d}{dt}\left(\frac{1}{2} m \dot{x}^2 + \frac{1}{2} K x^2\right) = 0$$

$$\therefore \frac{1}{2} m (2\dot{x}\ddot{x}) + \frac{1}{2} K (2x\dot{x}) = 0.$$

$$\therefore (m\ddot{x})\dot{x} + (Kx)\dot{x} = 0$$

Atmiya University Rajkot

$\therefore m\ddot{x} + kx = 0$

$\therefore \boxed{\ddot{x} + \frac{K}{m}x = 0}$ — (5)

→ Comparing equation (5) with fundamental equation of S.H.M, we get,

S.H.M eq^n ⇒ $\boxed{\ddot{x} + \omega^2 x = 0}$

$\therefore \omega_n^2 = \frac{k}{m}$ (or) $\boxed{\omega_n = \sqrt{\frac{K}{m}}}$ rad/sec

→ The natural frequency 'f_n' of vibration is,

$f_n = \frac{\omega_n}{2\pi}$ (or) $\boxed{f_n = \frac{1}{2\pi}\sqrt{\frac{K}{m}}}$ Hz

→ The time period 't_p' is,

$t_p = \frac{1}{f_n} = \frac{1}{\frac{1}{2\pi}\sqrt{\frac{K}{m}}}$ (or) $\boxed{t_p = 2\pi\sqrt{\frac{m}{K}}}$ sec

Atmiya University Rajkot

Rayleigh s Method

③ Rayleigh's Method

→ This is an extension of energy method, which is developed by Lord Rayleigh.

→ According to Principle of conservation of energy,

Total energy = constant

(Total energy)$_{\text{mean position}}$ = (Total energy)$_{\text{extreme position}}$

$\therefore (K.E + P.E)_1 = (K.E + P.E)_2$

(or) $(K.E)_1 + (P.E)_1 = (K.E)_2 + (P.E)_2$ — (1)

→ The subscripts 1 & 2 denote two different positions. Let subscript 1 denote the mean position where potential energy is zero ie $(P.E)_1 = 0$ & subscript 2 denote the extreme position where K.E is zero ie $(K.E)_2 = 0$. Therefore eqn (1) can be written as,

$$(K.E)_1 + 0 = 0 + (P.E)_2 \quad — (2)$$

→ But at mean position the K.E is maximum i.e $(K.E)_1 = (K.E)_{max}$
& at extreme position the potential energy is maximum
i.e $(P.E)_2 = (P.E)_{max}$

→ Therefore eqn. (2) can be written as,

$$(K.E)_{max} = (P.E)_{max} \quad — \quad (3)$$

→ Therefore, according to Lord Rayleigh's, the maximum K.E which is at the mean position is equal to maximum potential energy which is at the extreme position.

→ consider spring-mass system as shown in fig. below.

Atmiya University Rajkot

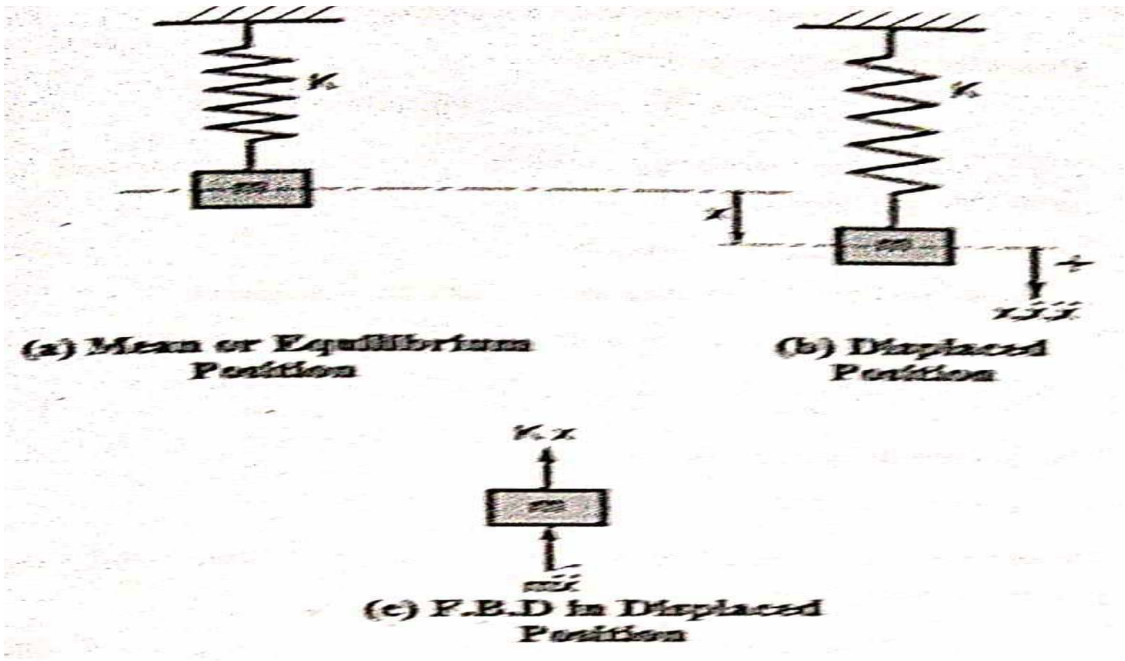

(a) Mean or Equilibrium Position

(b) Displaced Position

(c) F.B.D in Displaced Position

→ Let body having mass 'm' is moving with S.H.M, therefore the displacement of the body is given by,

$$\boxed{x = X \sin \omega_n t} \quad - (4)$$

where, x = Displacement of the body from the mean Position after time 't' sec

X = Max. displacement of body from the mean position or amplitude of vibration, m

ω_n = Circular natural frequency, rad/sec.

→ Velocity of body is given by,

$$\boxed{\dot{x} = \frac{dx}{dt} = \omega_n X \cos \omega_n t} \quad - (5)$$

→ The max. velocity is at mean Position i.e (at $t=0$) is given by,

$$\boxed{\dot{x}_{max} = \omega_n X} \quad - (6)$$

→ At mean Position, the max. K.E is,

Atmiya University Rajkot

$\therefore (K.E)_{max} = \frac{1}{2} m (\dot{x}_{max})^2$ (or) $\boxed{(K.E)_{max} = \frac{1}{2} m \omega_n^2 X^2}$ — (7)

→ The Potential Energy (P.E) is,

$$\boxed{P.E = \frac{1}{2} K x^2}$$

→ Therefore, at extreme position (at $x = X$), the maximum P.E is,

$$\boxed{(P.E)_{max.} = \frac{1}{2} K X^2} \quad — (8)$$

Atmiya University Rajkot

→ Substituting eqn. (7) & (8) in eqn. (3), we get,

$$\frac{1}{2} m \omega_n^2 X^2 = \frac{1}{2} K X^2$$

$\therefore \boxed{\omega_n^2 = \frac{K}{m}}$ or $\boxed{\omega_n = \sqrt{\frac{K}{m}}}$ rad/sec — (9)

→ The natural frequency 'f_n' of vibration is,

$f_n = \frac{\omega_n}{2\pi} \Rightarrow \boxed{f_n = \frac{1}{2\pi}\sqrt{K/m}}$, Hz — (10)

→ Time Period 't_p' $\Rightarrow \boxed{t_p = 2\pi\sqrt{\frac{m}{K}}}$, sec — (11)

Undamped Free Transverse Vibration

* Undamped Free Transverse Vibrations :-

→ Consider a cantilever beam of negligible mass carrying a concentrated mass 'm' at free end, as shown in fig.(a) below.

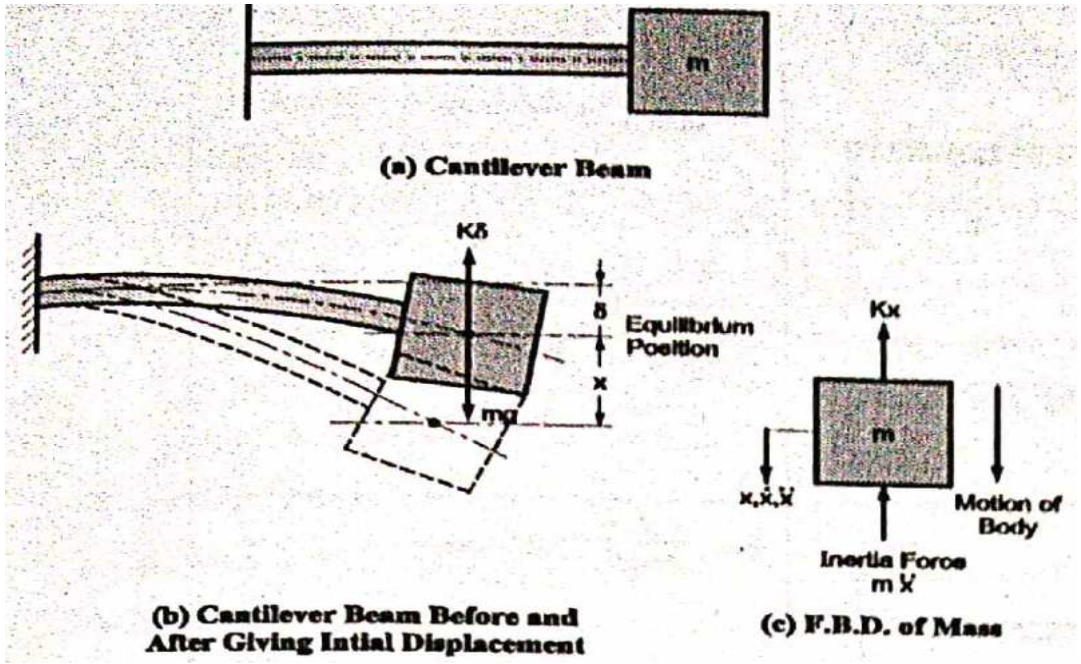

→ Let,

K = Stiffness of mass, N/m

δ = Static deflection of the beam due to mass attached at the end, m

x = Displacement of the mass from mean position after applying initial external force, m.

→ Due to gravitational force 'mg', the cantilever beam is deflected by 'δ' as shown in fig. (b)

→ Hence, at equilibrium (mean) position, $\boxed{mg = K\delta}$ — (1)

→ Let, the system is subjected to one time external force due to which it will displaced by 'x' from equilibrium (mean) position as shown in fig. (b) by dotted line.

→ Considering the forces acting on the mass beyond equilibrium (mean) position, the forces acting on the mass are:-

(i) Inertia force, $m\ddot{x}$ (upwards)

(ii) Resisting or restoring force, Kx (upwards).

→ According to D'Alembert's principle,

$$\sum [\text{Inertia force} + \text{External forces}] = 0$$

$$\therefore m\ddot{x} + Kx = 0$$

$$\therefore \boxed{\ddot{x} + \frac{K}{m}x = 0} \quad — (2)$$

Atmiya University Rajkot

→ Comparing eq^n. (2) with fundamental equation of S.H.M, we get,

$$\omega_n^2 = \frac{K}{m} \quad \text{(or)} \quad \boxed{\omega_n = \sqrt{\frac{K}{m}}} \text{ rad/sec} \quad -(3)$$

→ The natural frequency 'f_n' of vibrations is,

$$f_n = \frac{\omega_n}{2\pi} = \boxed{\frac{1}{2\pi}\sqrt{\frac{K}{m}} \text{ Hz}} \quad -(4)$$

→ From eq^n (1),

$$\boxed{\frac{K}{m} = \frac{g}{\delta}} \quad -(5)$$

Atmiya University Rajkot

→ Substituting the equation (5) in equation (4), we get,

$$f_n = \frac{1}{2\pi}\sqrt{\frac{g}{\delta}} = \frac{1}{2\pi}\sqrt{\frac{9.81}{\delta}}$$

$$\therefore \boxed{f_n = \frac{0.4985}{\sqrt{\delta}}} \text{, Hz} \quad -(6)$$

<u>NOTE</u> :- The static deflection of a cantilever beam with a load at free end is given by, $\delta = \frac{WL^3}{3EI}$ or $\boxed{\delta = \frac{Wl^3}{3EI}}$

Torsional Stiffness (K_t)

* Torsional Stiffness (K_t) :-

→ Torsional stiffness of shaft (K_t) is defined as the torque required to produce unit angular deflection in the direction of applied torque.

→ Mathematically,

$$K_t = \frac{T}{\theta} \quad \text{or} \quad \boxed{K_t = \frac{GJ}{l}} \quad -(1)$$

Where,

G = Modulus of rigidity for the shaft material, N/m^2.

J = Polar moment of inertia of shaft $\Rightarrow J = \frac{\pi}{32} d^4$, m^4.

l = Length of the shaft, m

d = Diameter of the shaft, m.

Undamped Torsional Vibration

* Undamped Free Torsional vibrations :-

→ Consider a disc having mass moment of inertia 'I' suspended on a shaft with negligible mass., as shown in fig. below.

→ Let, θ = Angular displacement of disc from mean position, radian

m = Mass of the disc, kg.

k = Radius of gyration on the disc, m.

I = Mass moment of inertia of the disc $= mk^2$, kg-m^2

K_t = Torsional stiffness of the shaft, N-m/rad.

Note:- Radius of gyration **or gyradius of a body about an axis of rotation is defined as the radial distance to a point which would have a moment of inertia the same as the body's actual distribution of mass, if the total mass of the body were concentrated.**

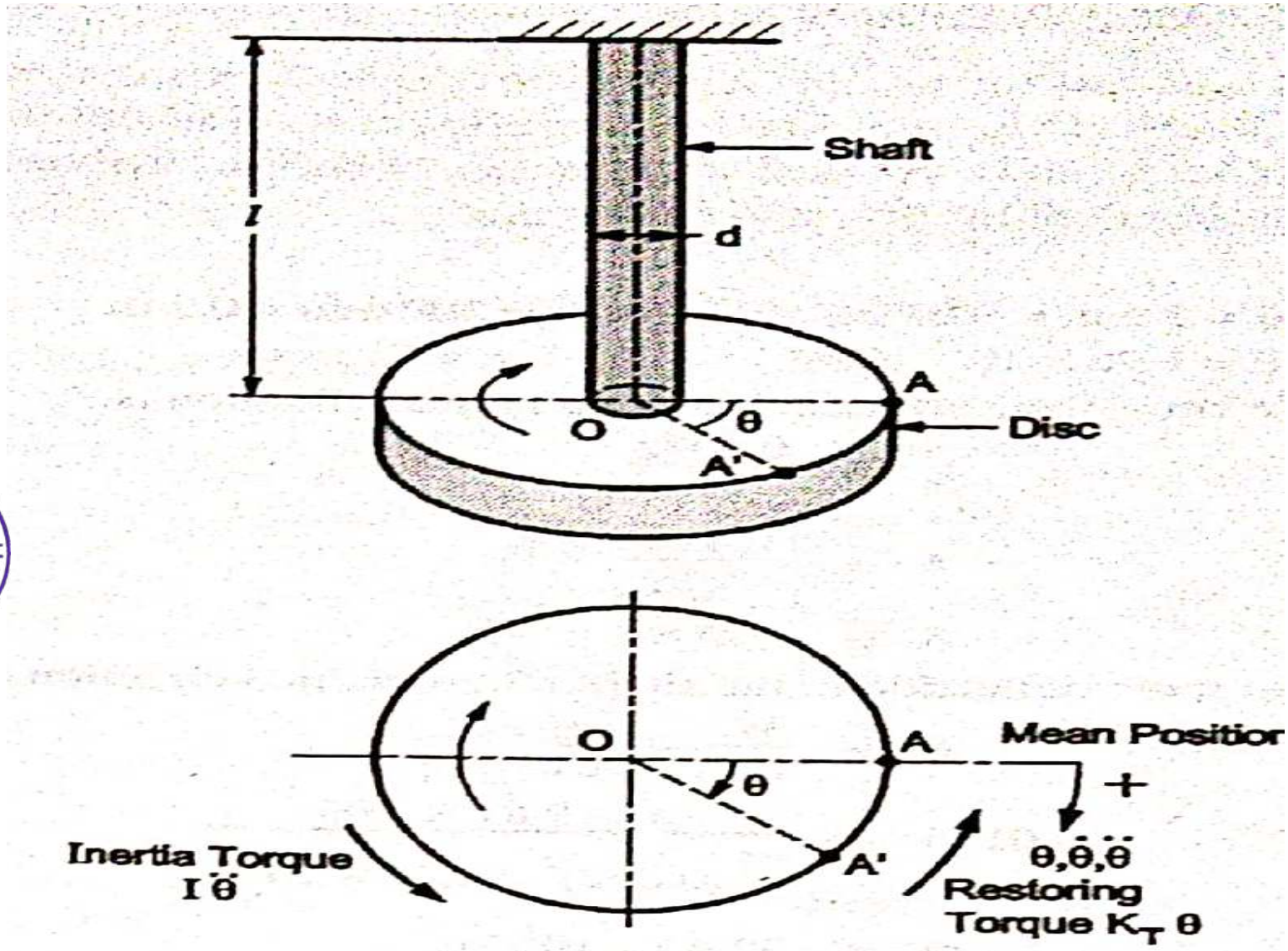

Undamped Free Torsional Vibration

Atmiya University Rajkot

→ If the disc is given an angular deflection about the axis of shaft, it oscillates or vibrates about the axis of shaft. Such vibrations are known as <u>torsional vibrations</u>.

→ The natural frequency 'f_n' of torsional vibrations can be obtained as follows :-

→ For angular displacement of disc 'θ' in clockwise direction, the torques acting on the disc are :-

(i) Inertia torque, $I\ddot{\theta}$ (anticlockwise)

(ii) Restoring torque due to torsional stiffness of shaft, $K_t\theta$ (anticlockwise)

Therefore according to D'Alembert's principle,

$$\Sigma[\text{Inertia torque} + \text{External torques}] = 0$$

$$\therefore I\ddot{\theta} + K_t\theta = 0$$

$$\therefore \boxed{\ddot{\theta} + \frac{K_t}{I}\theta = 0} \quad -(1)$$

Atmiya University Rajkot

→ The fundamental equation of S.H.M is,

$$\boxed{\ddot{\theta} + \omega_n^2 \theta = 0} \quad - (2)$$

→ Comparing equation (1) with fundamental equation of S.H.M. (i.e eqn. (2)) we get,

$$\omega_n^2 = \frac{K_t}{I} \quad \text{(or)} \quad \boxed{\omega_n = \sqrt{\frac{K_t}{I}}}, \text{ rad/sec} \quad - (3)$$

→ The natural frequency 'f_n', of torsional vibrations is,

$$f_n = \frac{\omega_n}{2\pi} \quad \text{or} \quad \boxed{f_n = \frac{1}{2\pi}\sqrt{\frac{K_t}{I}}}, \text{ Hz} \quad - (4)$$

→ Substituting value of K_t from eqn. (i.e $K_t = \frac{GJ}{l}$) in eqn. (4) we get,

$$\boxed{f_n = \frac{1}{2\pi}\sqrt{\frac{GJ}{Il}}}, \text{ Hz}$$

→ The time period 't_p' is,

$$t_p = \frac{1}{f_n} = \frac{1}{\frac{1}{2\pi}\sqrt{\frac{K_t}{I}}} \Rightarrow \boxed{t_p = 2\pi\sqrt{\frac{I}{K_t}}} \text{ sec.} \quad - (5)$$

Atmiya University Rajkot

A Cantilever shaft of 50 mm diameter and 300 mm long has a disc of mass 100 kg at its free end. The young s modulus for shaft material is 200 GPa. Determine the frequency of longitudinal and Transverse Vibration of the shaft.

Given : $d = 50 \text{ mm} = 0.05 \text{ m}, \quad l = 300 \text{ mm} = 0.3 \text{ m}$

$m = 100\text{kg}, \quad E = 200 \text{ Gpa} = 200 \times 10^9 \text{ N/m}^2$

(i) Frequency of longitudinal vibration

The static deflection of the shaft in longitudinal direction

$$\delta = \frac{Wl}{AE} = \frac{100 \times 9.81 \times 0.3}{\frac{\pi}{4}(0.05)^2 \times 200 \times 10^9}$$

$$= 0.75 \times 10^{-6} \text{ m}$$

∴ Frequency of longitudinal vibration is,

$$f_n = \frac{0.4985}{\sqrt{\delta}} = \frac{0.4985}{\sqrt{0.75 \times 10^{-6}}}$$

$$= 575 \text{ Hz}$$

...Ans.

(ii) Frequency of transverse vibration

Static deflection of the shaft in transverse direction is,

$$\delta = \frac{Wl^3}{3\,E.I} = \frac{100 \times 9.81 \times (0.3)^2}{3 \times 200 \times 10^9 \times \frac{\pi}{4}(0.05)^4}$$

$$= 0.14 \times 10^{-3} \text{ m}$$

∴ Frequency of transverse vibration is,

$$f_n = \frac{0.4985}{\sqrt{\delta}} = \frac{0.4985}{\sqrt{0.14 \times 10^{-3}}}$$

$$= 41 \text{ Hz}$$

...Ans.

Numerical for Practice

A steel Wire with $E = 1.96 \times 10^{11}$ N/m^2 is of 2 mm diameter and is 30 mm long. It is fixed at the upper end and carries a mass M kg its lower end. Find mass M so that frequency of longitudinal vibrations is 4 cycles/ sec.

$\delta = 0.0155$ mm

$M = 32.43 \times 10^3$ kg

Determine the natural frequency of the system as shown in figure below.

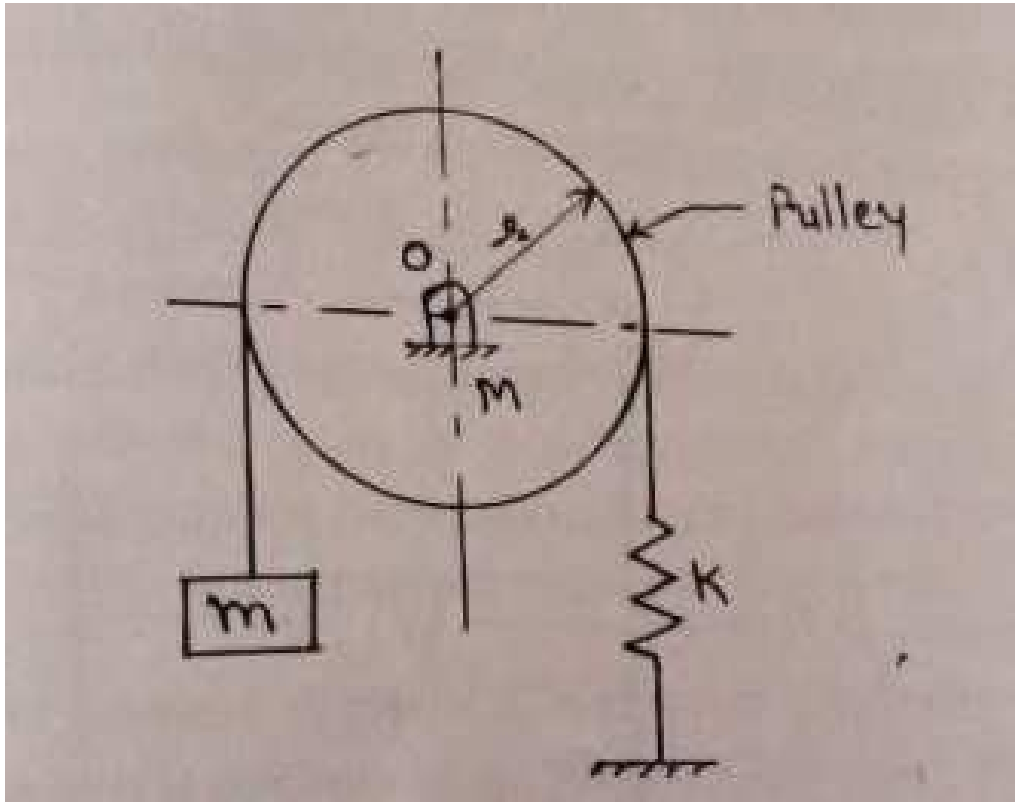

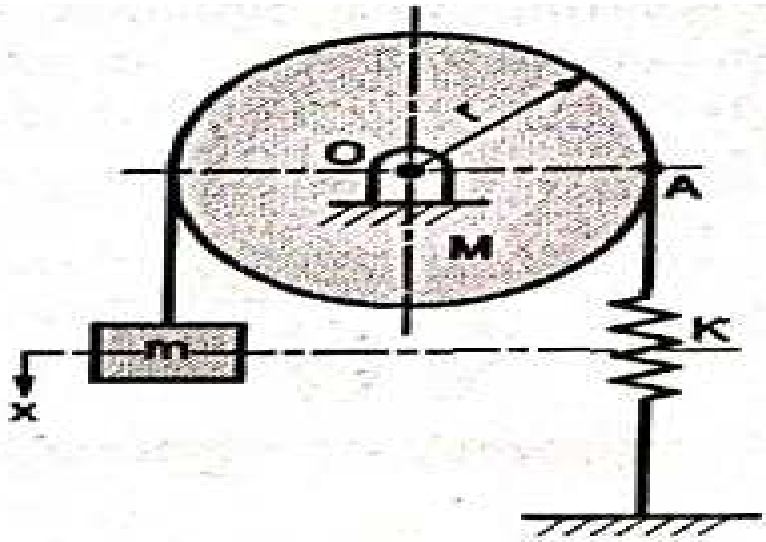

(a) Equilibrium Position

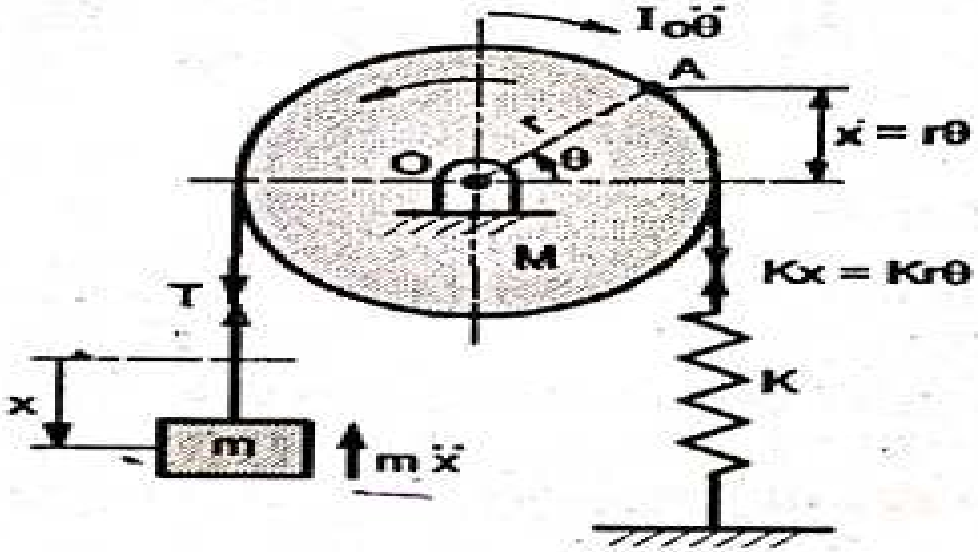

(b) Displaced Position

Atmiya University Rajkot

Using Energy Method

From Figure (b),

- Kinetic energy (Linear) of the mass $= \frac{1}{2} m\dot{x}^2 = \frac{1}{2} m r^2 \dot{\theta}^2$
- Kinetic energy (Rotary) of the pulley $= \frac{1}{2} I_o \omega^2 = \frac{1}{2} I_o \dot{\theta}^2$
- Potential energy of the spring $= \frac{1}{2} K x^2 = \frac{1}{2} K r^2 \theta^2$
- The total kinetic energy is, $KE = \frac{1}{2} m r^2 \dot{\theta}^2 + \frac{1}{2} I_o \dot{\theta}^2$
- The total potential energy is, $PE = \frac{1}{2} K r^2 \theta^2$
- According to energy method,

$$\frac{d}{dt}(KE + PE) = 0$$

$$\therefore \frac{d}{dt}\left(\frac{1}{2}mr^2\dot{\theta}^2 + \frac{1}{2}I_o\dot{\theta}^2 + \frac{1}{2}Kr^2\theta^2\right) = 0$$

$$\frac{1}{2}mr^2 2\dot{\theta}\ddot{\theta} + \frac{1}{2}I_o 2\dot{\theta}\ddot{\theta} + \frac{1}{2}Kr^2 2\theta\dot{\theta} = 0$$

$$mr^2\ddot{\theta} + \frac{1}{2}Mr^2\ddot{\theta} + Kr^2\theta = 0$$

$$\ldots \left[\because I_o = \frac{1}{2}Mr^2 \text{ for pulley}\right]$$

$$m\ddot{\theta} + \frac{M}{2}\ddot{\theta} + K\theta = 0$$

$$\left(\frac{M}{2} + m\right)\ddot{\theta} + K\theta = 0$$

$$\ddot{\theta} + \left(\frac{K}{\frac{M}{2} + m}\right)\theta = 0 \qquad \ldots(c)$$

Atmiya University Rajkot

This Equation (c) is the differential equation of motion for a given system comparing this equation with fundamental equation of simple harmonic motion, we get,

$$\omega_n^2 = \frac{K}{\left(\frac{M}{2} + m\right)}$$

$$\therefore \omega_n = \sqrt{\frac{K}{\left(\frac{M}{2} + m\right)}}, \text{ rad/s}$$

Therefore, the natural frequency of vibration for a given system is,

$$f_n = \frac{\omega_n}{2\pi}$$

$$\text{or} \quad f_n = \frac{1}{2\pi}\sqrt{\frac{K}{\frac{M}{2} + m}}, \text{ Hz} \qquad \text{—Ans.}$$

– This Equation (c) is the differential equation of motion for a given system comparing this equation with fundamental equation of simple harmonic motion, we get,

$$\omega_n^2 = \frac{K}{\left(\frac{M}{2} + m\right)}$$

$$\therefore \omega_n = \sqrt{\frac{K}{\left(\frac{M}{2} + m\right)}} \text{ , rad/s}$$

Therefore, the natural frequency of vibration for a given system is,

$$f_n = \frac{\omega_n}{2\pi}$$

$$\text{or} \quad f_n = \frac{1}{2\pi}\sqrt{\frac{K}{\frac{M}{2} + m}} \text{ , Hz}$$ —Ans.

Atmiya University Rajkot

Determine the Natural Frequency of the system shown in figure below.

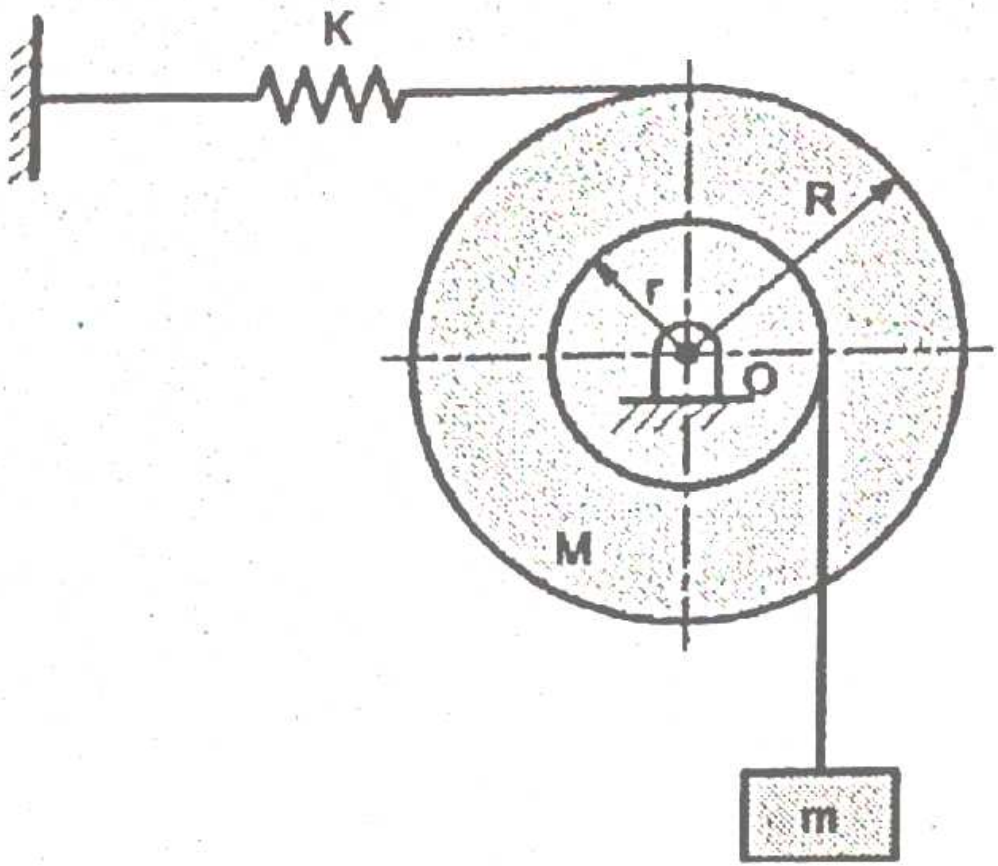

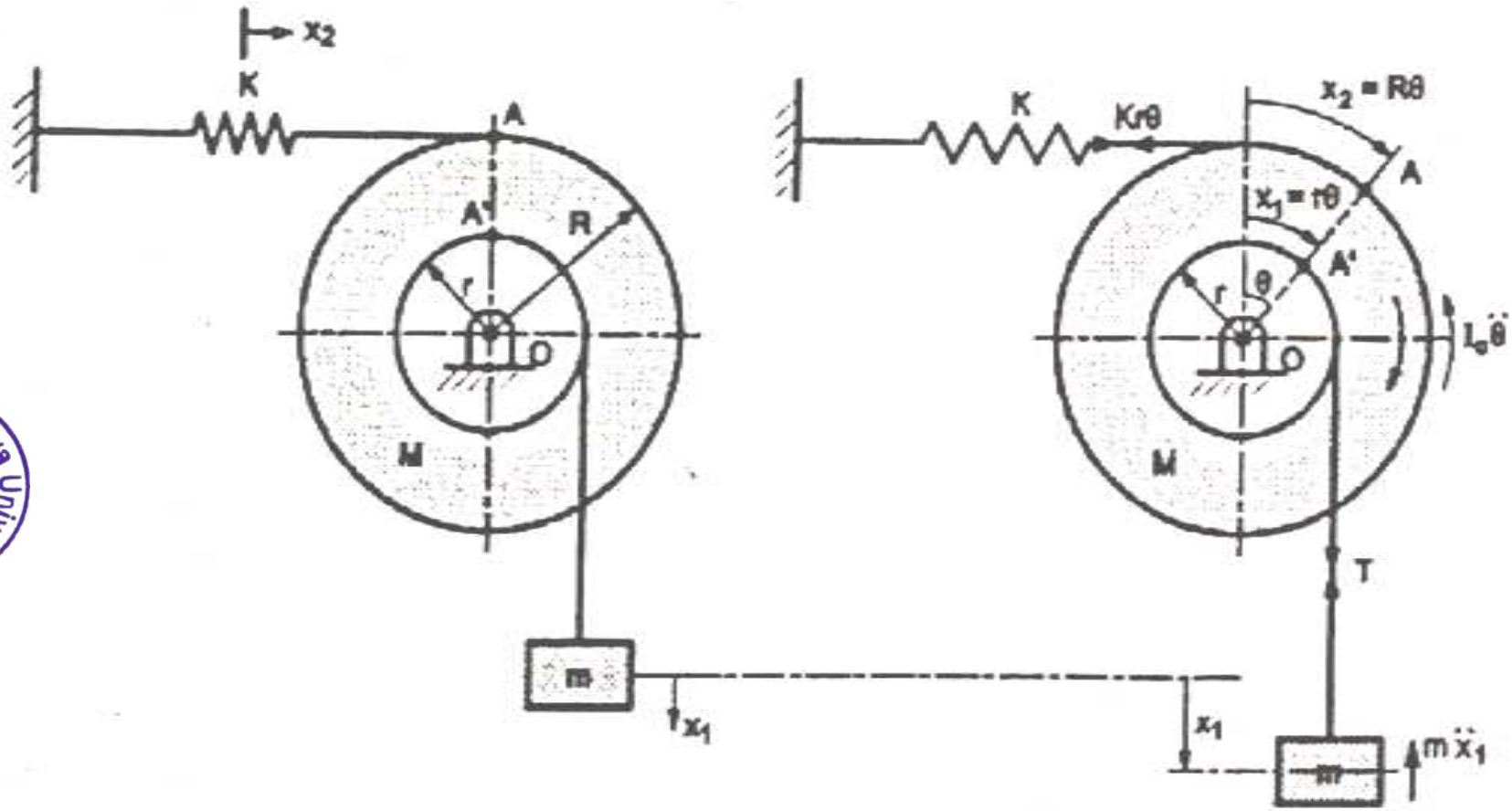

(a) Equilibrium Position (b) Displaced Position

Atmiya University Rajkot

Using Energy Method

Kinetic energy (Linear) of the mass $= \frac{1}{2} m\dot{x}_1^2 = \frac{1}{2} mr^2 \dot{\theta}^2$

Kinetic energy (Rotary) of the pulley $= \frac{1}{2} I_o \omega^2 = \frac{1}{2} I_o \dot{\theta}^2$

$= \frac{1}{4} MR^2 \dot{\theta}^2$

Potential energy of the spring $= \frac{1}{2} Kx_2^2 = \frac{1}{2} KR^2 \theta^2$

The total kinetic energy is, $KE = \frac{1}{2} mR^2 \dot{\theta}^2 + \frac{1}{2} MR^2 \dot{\theta}^2$

The total potential energy is, $PE = \frac{1}{2} K R^2 \theta^2$

According to energy method,

$$\frac{d}{dt}(KE + PE) = 0$$

$$\frac{d}{dt}\left(\frac{1}{2} mr^2 \dot{\theta}^2 + \frac{1}{4} MR^2 \dot{\theta}^2 + \frac{1}{2} KR^2 \theta^2\right) = 0$$

$$\frac{1}{2} mr^2 2\dot{\theta}\ddot{\theta} + \frac{1}{4} MR^2 2\dot{\theta}\ddot{\theta} + \frac{1}{2} KR^2 2\theta\dot{\theta} = 0$$

$$\therefore \quad mr^2 \ddot{\theta} + \frac{1}{2} MR^2 \ddot{\theta} + KR^2 \theta = 0$$

$$\therefore \quad \left(\frac{MR^2}{2} + mr^2\right)\ddot{\theta} + KR^2 \theta = 0$$

$$\therefore \quad \ddot{\theta} + \left(\frac{KR^2}{\frac{MR^2}{2} + mr^2} \right) \theta = 0 \qquad \ldots(c)$$

This Equation (c) is the differential equation of motion for a given system. Comparing this equation with fundamental equation of simple harmonic motion, we get,

$$\omega_n^2 = \frac{KR^2}{\frac{MR^2}{2} + mr^2}$$

$$\therefore \quad \omega_n = \sqrt{\frac{KR^2}{\frac{MR^2}{2} + mr^2}} \text{, rad/s}$$

Atmiya University Rajkot

Therefore, the natural frequency of vibration for a given system is,

$$f_n = \frac{\omega_n}{2\pi} = \frac{1}{2\pi} \sqrt{\frac{KR^2}{\frac{MR^2}{2} + mr^2}} \text{, Hz}$$

$$\therefore \quad f_n = \frac{1}{2\pi} \sqrt{\frac{1000 \times (0.05)^2}{\frac{10\,(0.05)^2}{2} + 2 \times (0.03)^2}}$$

or $\quad f_n = 2.10 \text{ Hz}$ ...Ans.

A mass of 1 kg is suspended by a spring passing over the pulley, as shown in Fig. The system is supported horizontally by a spring of stiffness 1 kN/m. Determine the natural frequency of vibration of a system. Using following data :

Mass of pulley, M = 10 kg

Radius of pulley, R = 50 mm

Distance of spring from centre of pulley, r = 35 mm

Atmiya University Rajkot

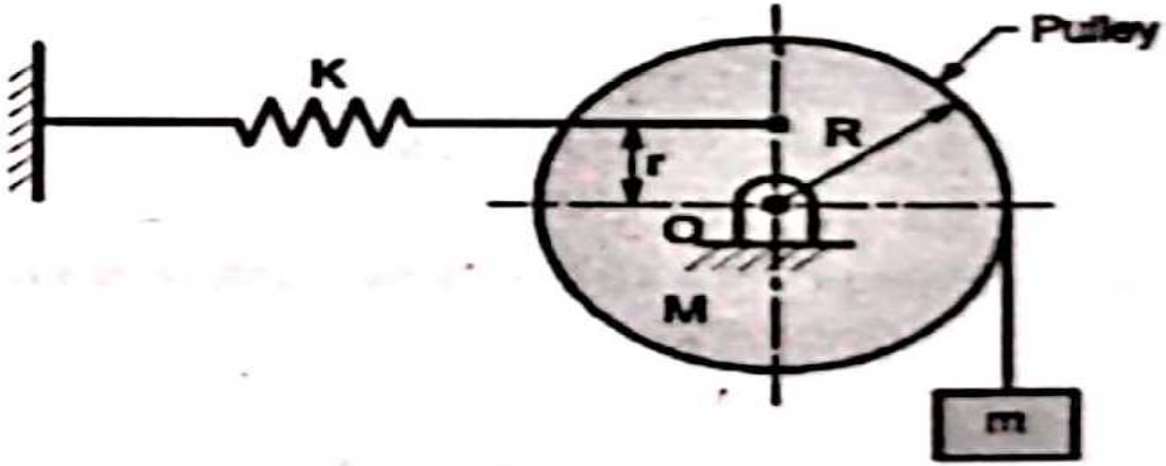

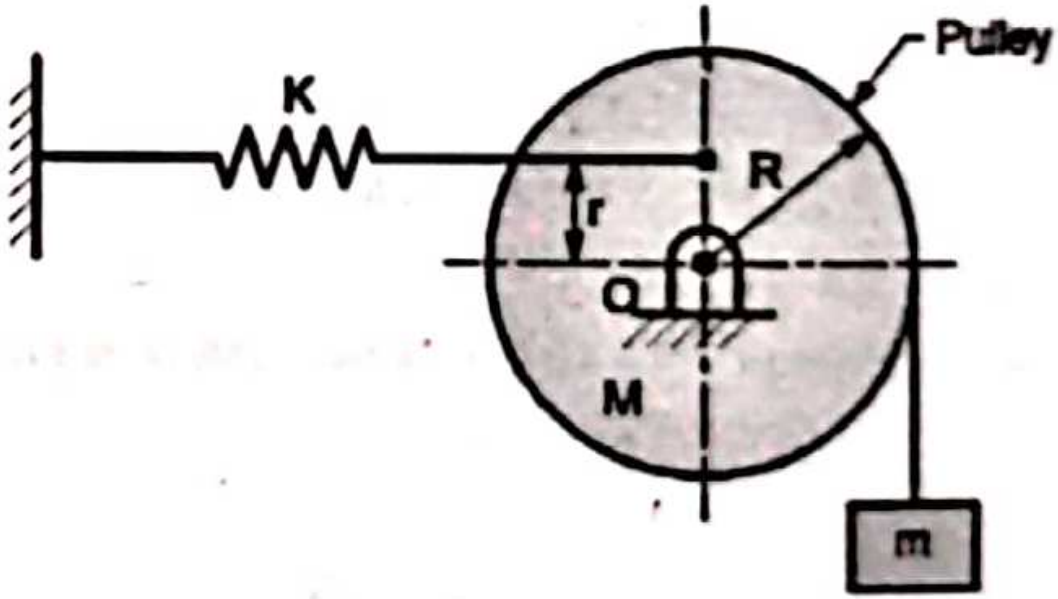

Atmiya University Rajkot

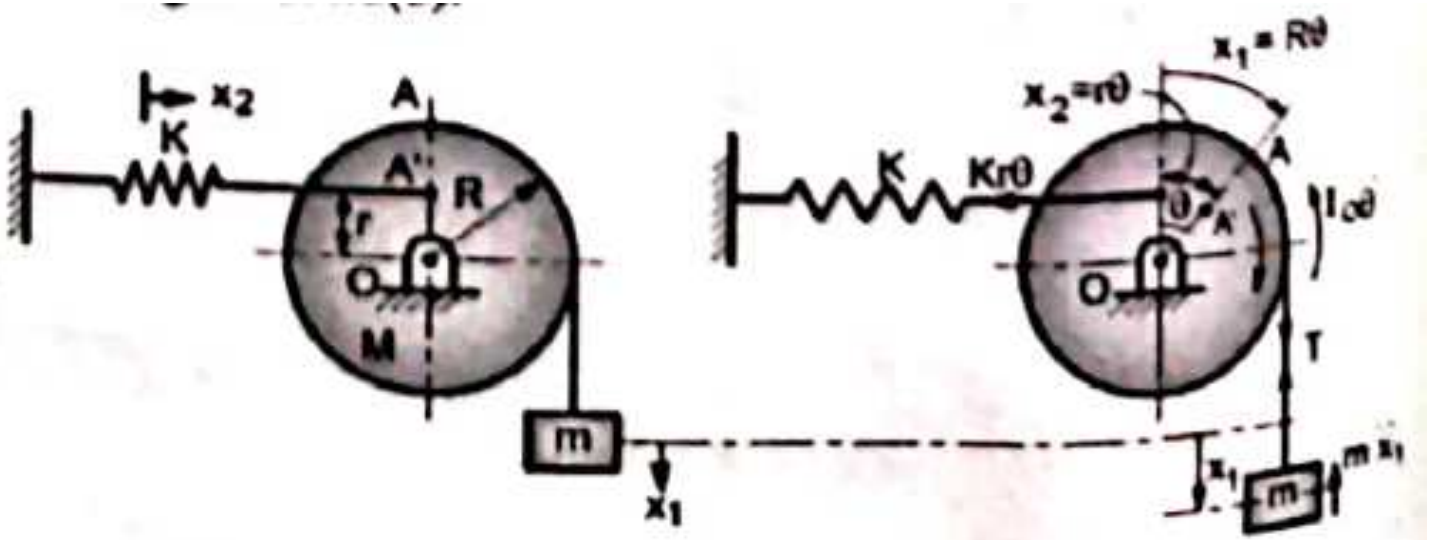

(a)Equilibrium Position (b)Displaced Position

Using Energy Method

- Kinetic energy (Linear) of the mass $= \frac{1}{2} m \dot{x}_1^2 = \frac{1}{2} mR^2 \dot{\theta}^2$

  Kinetic energy (Rotary) of the pulley $= \frac{1}{2} I_o \omega^2 = \frac{1}{2} I_o \dot{\theta}^2$

  $= \frac{1}{4} MR^2 \dot{\theta}^2$

- Potential energy of the spring $= \frac{1}{2} Kx_2^2 = \frac{1}{2} Kr^2 \theta^2$

- The total kinetic energy is,

$$KE = \frac{1}{2} mR^2 \dot{\theta}^2 + \frac{1}{2} MR^2 \dot{\theta}^2$$

- The total potential energy is,

$$PE = \frac{1}{2} K r^2 \theta^2$$

– According to energy method,

$$\frac{d}{dt}(KE + PE) = 0$$

$$\therefore \frac{d}{dt}\left(\frac{1}{2}mR^2\dot{\theta}^2 + \frac{1}{4}MR^2 2\dot{\theta} + \frac{1}{2}Kr^2\theta^2\right) = 0$$

$$\frac{1}{2}mR^2 2\dot{\theta}\ddot{\theta} + \frac{1}{4}MR^2 2\dot{\theta}\ddot{\theta} + \frac{1}{2}Kr^2 2\theta\dot{\theta} = 0$$

$$mR^2\ddot{\theta} + \frac{1}{2}MR^2\ddot{\theta} + Kr^2\theta = 0$$

$$\left(mR^2 + \frac{MR^2}{2}\right)\ddot{\theta} + Kr^2\theta = 0$$

$$\therefore \quad \ddot{\theta} + \left(\frac{Kr^2}{\frac{MR^2}{2} + mR^2}\right)\theta = 0 \qquad \ldots(c)$$

– This Equation (c) is the differential equation of motion for a given system. Comparing this equation with fundamental equation of simple harmonic motion, we get,

Atmiya University Rajkot

$$\omega_n^2 = \frac{Kr^2}{\left(\frac{M}{2}+m\right)R^2}$$

$$\therefore \omega_n = \sqrt{\frac{Kr^2}{\left(\frac{M}{2}+m\right)R^2}}$$

or $$\omega_n = \frac{r}{R}\sqrt{\frac{K}{\frac{M}{2}+m}}, \text{ rad/s}$$

Atmiya University Rajkot

Therefore, the natural frequency of vibration for a given system is,

$$f_n = \frac{\omega_n}{2\pi} = \frac{r}{2\pi R}\sqrt{\frac{K}{\frac{M}{2}+m}}, \text{ Hz}$$

$$\therefore f_n = \frac{0.035}{2\pi \times 0.05}\sqrt{\frac{1000}{\frac{10}{2}+1}}$$

or $$f_n = 1.4382 \text{ Hz}$$

Find the natural frequency of oscillation of simple pendulum as shown in figure.

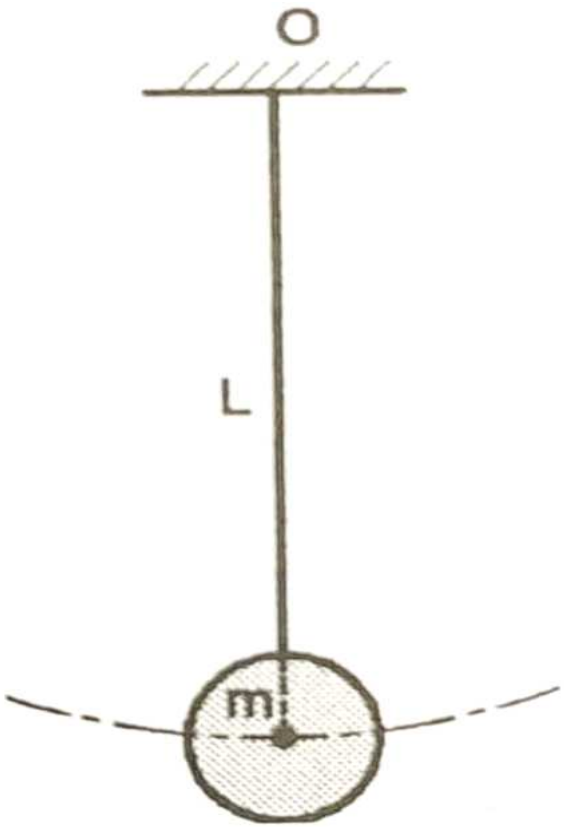

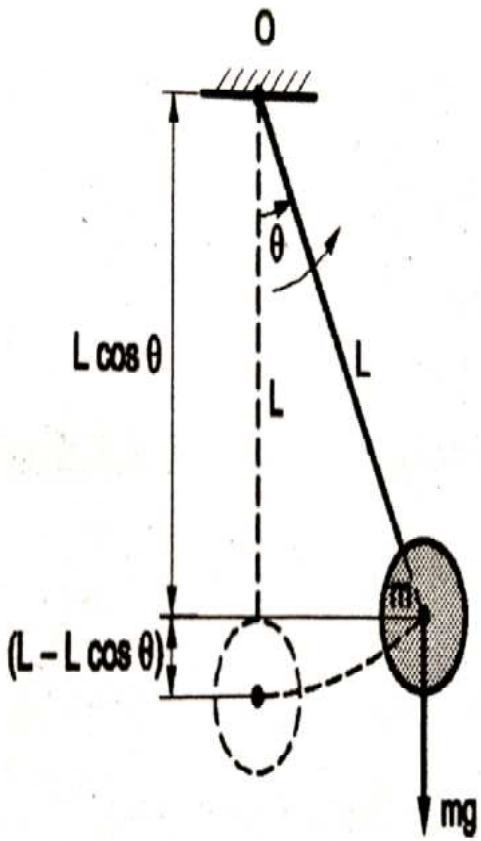

→ Using Energy Method :-

→ From above fig.

The K.E of mass 'm' is,

$$\boxed{K.E = \frac{1}{2} I_0 \dot{\theta}^2}$$

→ The Potential energy of mass 'm' is,

$$P.E = mg(L - L\cos\theta) = mgL(1 - \cos\theta)$$

→ According to energy method,

$$\frac{d}{dt}(K.E + P.E) = 0$$

$$\frac{d}{dt}\left[\frac{1}{2} I_0 \dot{\theta}^2 + mgL(1 - \cos\theta)\right] = 0$$

$$\therefore \frac{d}{dt}\left[\frac{1}{2} I_0 \dot{\theta}^2 + mgL - mgL\cos\theta\right] = 0$$

$$\therefore \frac{1}{2} I_0 (2\dot{\theta}\ddot{\theta}) + mgL\sin\theta\,\dot{\theta} = 0$$

$$\therefore I_0 \ddot{\theta} + mgL\theta = 0 \quad [\because \theta \text{ is small, } \sin\theta \simeq \theta]$$

$$\therefore \boxed{I_0 \ddot{\theta} + mgL\theta = 0}$$

$$\therefore \ddot{\theta} + \left(\frac{mgL}{I_0}\right)\theta = 0$$

→ Comparing above eqn. with Fundamental equation of simple Harmonic motion, we get,

Atmiya University Rajkot

$$\omega_n^2 = \frac{mgL}{I_0}$$

$$\therefore \omega_n = \sqrt{\frac{mgL}{I_0}} = \sqrt{\frac{mgL}{mL^2}} \quad (\because I_0 = mL^2)$$

$$\therefore \boxed{\omega_n = \sqrt{\frac{g}{L}}} \text{ rad/sec}$$

→ ∴ Natural Frequency of oscillation is,

$$f_n = \frac{\omega_n}{2\pi}$$

$$\therefore \boxed{f_n = \frac{1}{2\pi}\sqrt{\frac{g}{L}}} \text{ Hz}$$

→ Above eqn. represents the natural frequency of simple pendulum.

Atmiya University Rajkot

Determine the natural frequency of compound pendulum shown in figure.

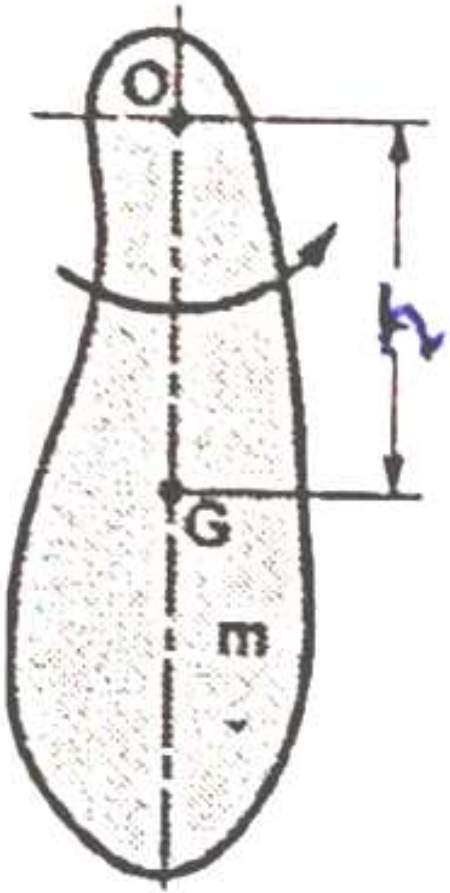

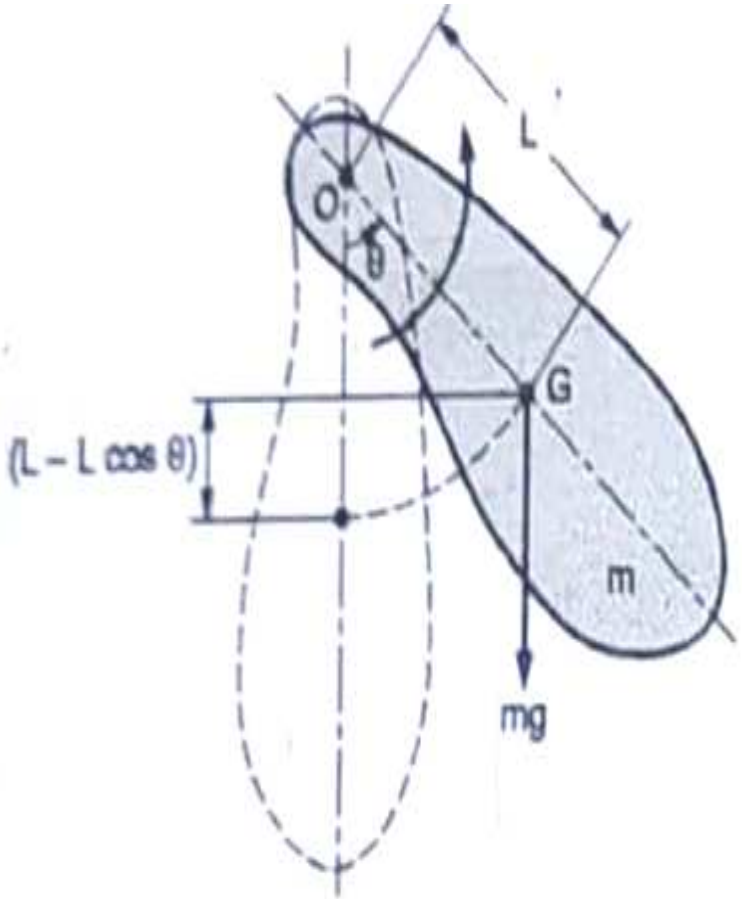

→ From above fig.

→ The K.E of the compound pendulum is,

$$\boxed{K.E = \frac{1}{2} I_0 \dot{\theta}^2}$$

→ The P.E of the compound pendulum is,

$$\boxed{P.E = mg(h - h\cos\theta)}$$

(4)

→ According to energy method,

$$\frac{d}{dt}(K.E + P.E) = 0$$

$$\therefore \frac{d}{dt}\left(\frac{1}{2} I_0 \dot{\theta}^2 + mg(h - h\cos\theta)\right) = 0.$$

$$\therefore \frac{1}{2} I_0 (2\dot{\theta}\ddot{\theta}) + mgh\sin\theta\dot{\theta} = 0$$

$$\therefore I_0 \ddot{\theta} + mgh\theta = 0 \quad [\because \theta \text{ is small, } \sin\theta \cong \theta]$$

$$\therefore m.(k^2 + h^2)\ddot{\theta} + mgh\theta = 0 \qquad (\because I_0 = m(k^2 + l^2))$$

$$\therefore (k^2 + h^2)\ddot{\theta} + gh\theta = 0$$

$$\therefore \boxed{\ddot{\theta} + \left(\frac{gh}{k^2 + h^2}\right)\theta = 0}$$

→ Comparing above eqn. with S.H.M eqn, we get,

$$\omega_n^2 = \frac{gh}{k^2 + h^2} \Rightarrow \boxed{\omega_n = \sqrt{\frac{gh}{k^2 + h^2}}}, \text{ rad/sec}$$

∴ Natural frequency of oscillation is,

$$f_n = \frac{\omega_n}{2\pi}$$

$$\therefore \boxed{f_n = \frac{1}{2\pi}\sqrt{\frac{gh}{k^2 + h^2}}}, \text{ Hz}$$

→ Above eqn. represents the natural frequency of compound pendulum.

(5)

Atmiya University Rajkot

Find the differential equation of motion and natural frequency of vibration for the system shown in figure.

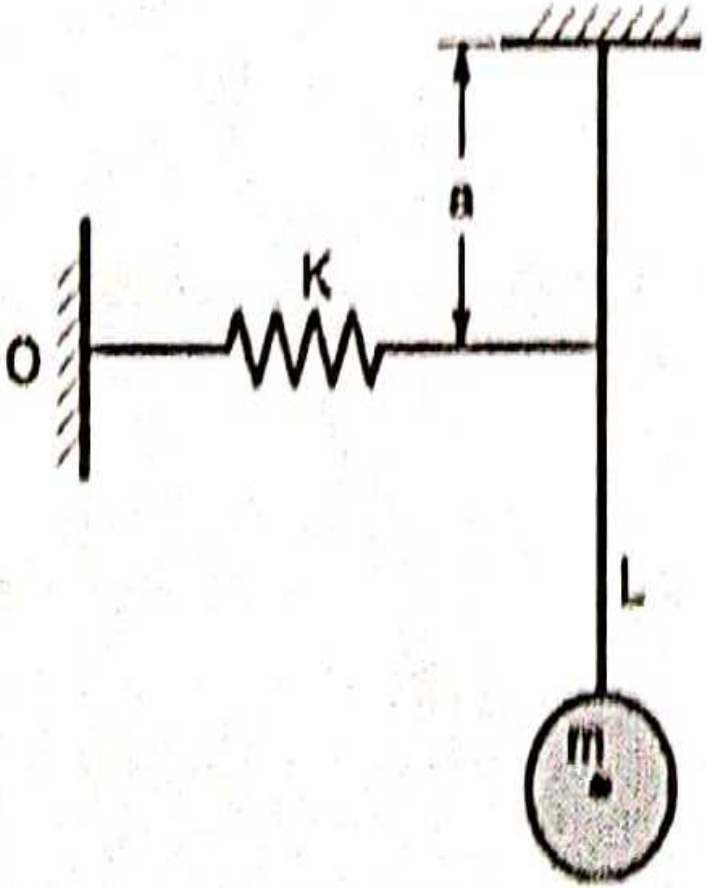

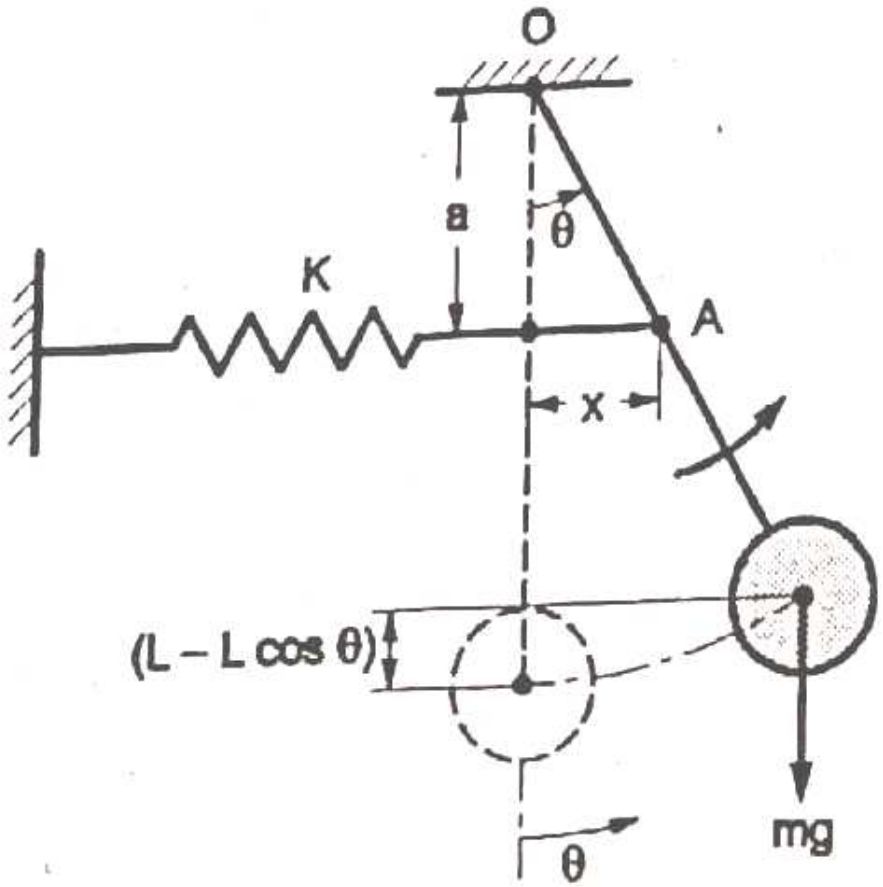

Energy Method :

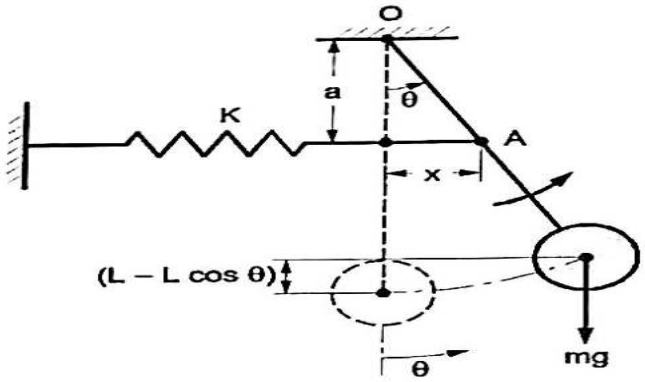

Fig. Ex. 5.29(c)

From Fig. Ex. 5.29(c) ;

- Kinetic energy of mass $= \frac{1}{2} I_o \dot{\theta}^2$
- Potential energy of mass $= mg\,(L - L\cos\theta)$
- Potential energy of spring $= \frac{1}{2} Kx^2 = \frac{1}{2} Ka^2\,\theta^2$
- The total kinetic energy is, $KE = \frac{1}{2} I_o \dot{\theta}\, 2$
- The toal potential energy is, $PE = mg\,(L - L\cos\theta) + \frac{1}{2} Ka^2\,\theta^2$
- According to energy method,

$$\frac{d}{dt}(KE + PE) = 0$$

$$\therefore \frac{d}{dt}\left(\frac{1}{2} I_o\,\dot{\theta}^2 + mg(L - L\cos\theta) + \frac{1}{2} Ka^2\,\theta^2\right) = 0$$

$$\frac{1}{2} I_o\, 2\dot{\theta}\,\ddot{\theta} + mgL\sin\theta\,\dot{\theta} + \frac{1}{2} Ka^2\, 2\theta\,\dot{\theta} = 0$$

$$I_o\,\ddot{\theta} + mgL\theta + Ka^2\,\theta = 0$$

$$I_o\,\ddot{\theta} + (mgL + Ka^2)\,\theta = 0$$

$$\therefore \ddot{\theta} + \left(\frac{mgL + Ka^2}{I_o}\right)\theta = 0 \qquad \ldots(b)$$

- This Equation (b) is the differential equation of motion of a given system. Comparing this equation with fundamental equation of simple harmonic motion, we get,

$$\omega_n^2 = \frac{mgL + Ka^2}{I_o} \qquad \therefore \omega_n = \sqrt{\frac{mgL + Ka^2}{I_o}} \quad \text{or} \quad \omega_n = \sqrt{\frac{mgL + Ka^2}{mL^2}}\text{, rad/sec}$$

Atmiya University Rajkot

- Therefore, natural frequency of oscillation is,

$$f_n = \frac{\omega_n}{2\pi} \qquad f_n = \frac{1}{2\pi}\sqrt{\frac{mgL + Ka^2}{mL^2}}, \text{Hz} \qquad \text{...Ans.}$$

Atmiya University Rajkot

Find the natural frequency of the system shown in figure.

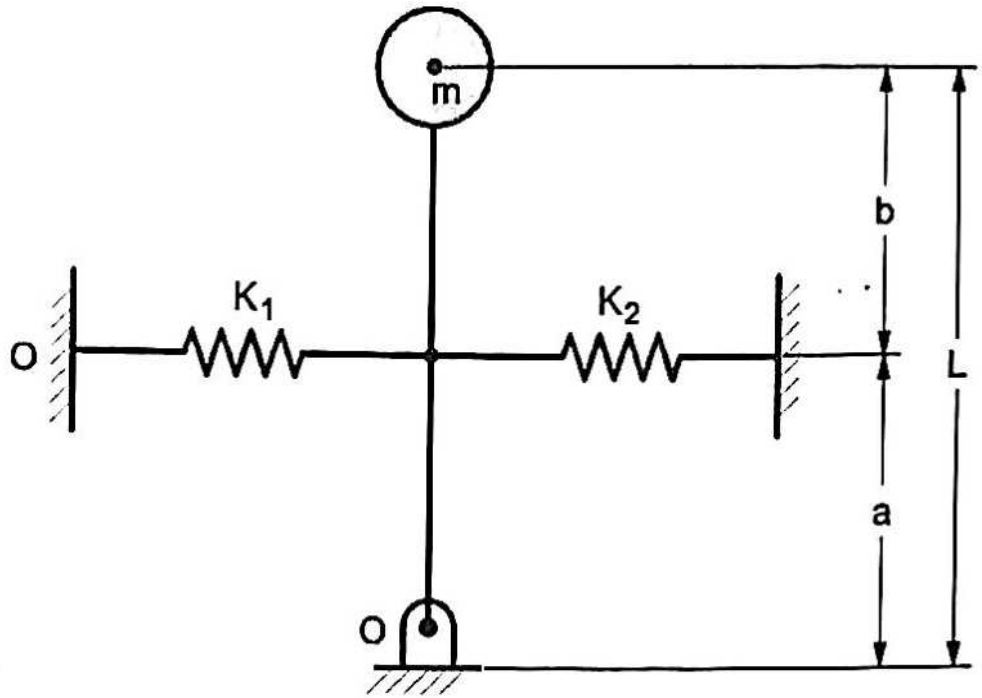

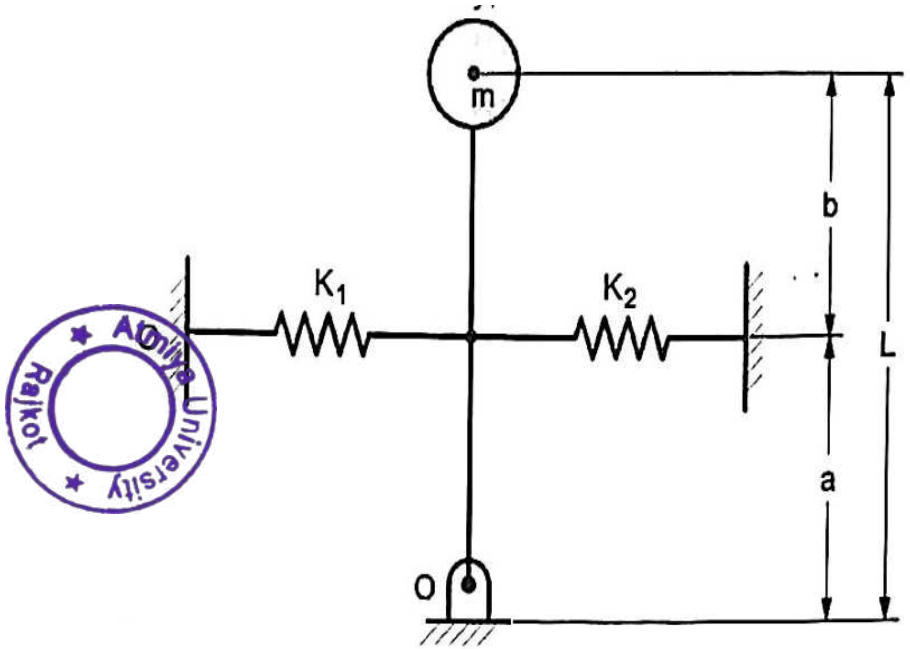

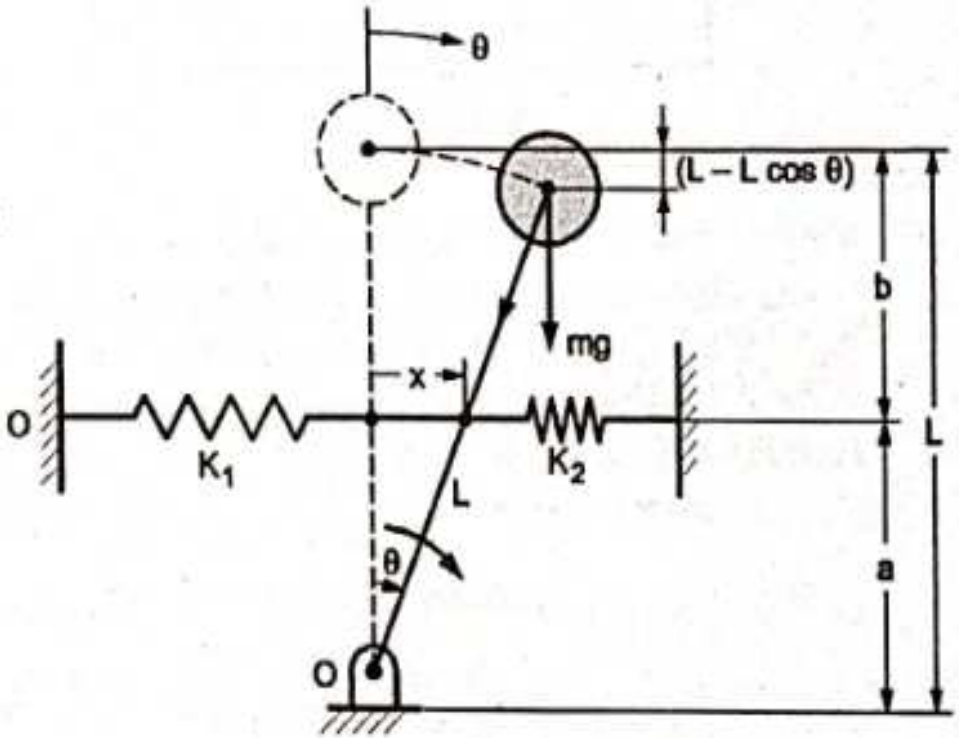

Atmiya University Rajkot

Energy Method :

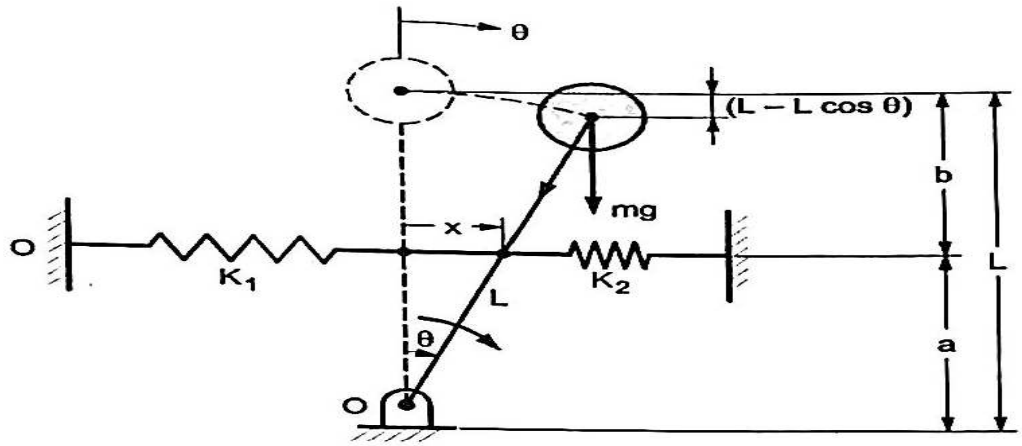

(c)
Fig. Ex. 5.30

From Fig. Ex. 5.30(c);

- Kinetic energy of mass $= \frac{1}{2} I_o \dot{\theta}^2$
- Potential energy of mass $= -mg\,(L - L\cos\theta)$
- Potential energy of spring 1 $= \frac{1}{2} K_1 x^2 = \frac{1}{2} K_1 a^2 \theta^2$
- Potential energy of spring 2 $= \frac{1}{2} K_2 x^2 = \frac{1}{2} K_2 a^2 \theta^2$
- The total kinetic energy is, $KE = \frac{1}{2} I_o \dot{\theta}^2$
- The total potential energy is, $PE = -mg\,(L - L\cos\theta) + \frac{1}{2} K_1 a^2 \theta^2 + \frac{1}{2} K_2 a^2 \theta^2$
- According to energy method,

$$\frac{d}{dt}(KE + PE) = 0$$

$$\therefore \quad \frac{d}{dt}\left(\frac{1}{2} I_o \dot{\theta}^2 - mg\,(L - L\cos\theta) + \frac{1}{2} K_1 a^2 \theta^2 + \frac{1}{2} K_2 a^2 \theta^2\right) = 0$$

$$\frac{1}{2} I_o\, 2\dot{\theta}\,\ddot{\theta} - mgL\sin\theta\,\dot{\theta} + \frac{1}{2} K_1 a^2\, 2\theta\,\dot{\theta} + \frac{1}{2} K_2 a^2\, 2\theta\,\dot{\theta} = 0$$

$$I_o \ddot{\theta} - mgL\theta + (K_1 + K_2)\, a^2 \theta = 0 \qquad \ldots[\because \theta \text{ is small}, \sin\theta \simeq \theta]$$

$$I_o \ddot{\theta} + [(K_1 + K_2)\, a^2 - mgL]\,\theta = 0$$

Atmiya University Rajkot

$$\therefore \quad \ddot{\theta} + \left[\frac{(K_1 + K_2)^2 - mgL}{I_o} \right] = 0 \qquad \ldots(d)$$

- This Equation (d) is the differential equation of motion for a given system, comparing this equation with the fundamental equation of simple harmonic motion, we get,

$$\omega_n^2 = \frac{(K_1 + K_2)\, a^2 - mgL}{I_o} \qquad \therefore \quad \omega_n = \sqrt{\frac{(K_1 + K_2)\, a^2 - mgL}{I_o}}$$

$$\text{or} \qquad \omega_n = \sqrt{\frac{(K_1 + K_2)\, a^2 - mgL}{mL^2}} \text{, rad/sec}$$

- Therefore, natural frequency of vibration for a given system is,

$$f_n = \frac{\omega_n}{2\pi} \qquad \text{or} \quad f_n = \frac{1}{2\pi}\sqrt{\frac{(K_1 + K_2)\, a^2 - mgL}{mL^2}} \text{, Hz} \qquad \text{...Ans.}$$

Atmiya University Rajkot

Determine the natural frequency of oscillation of a cylindrical disc suspended from a point on its circumference

- Let, I_o = mass moment of inertia of cylindrical disc about O, $kg \cdot m^2$

$$= I_G + mr^2 = \frac{mr^2}{2} + mr^2 \quad \text{or} \quad I_o = \frac{3mr^2}{2} \qquad \text{...(a)}$$

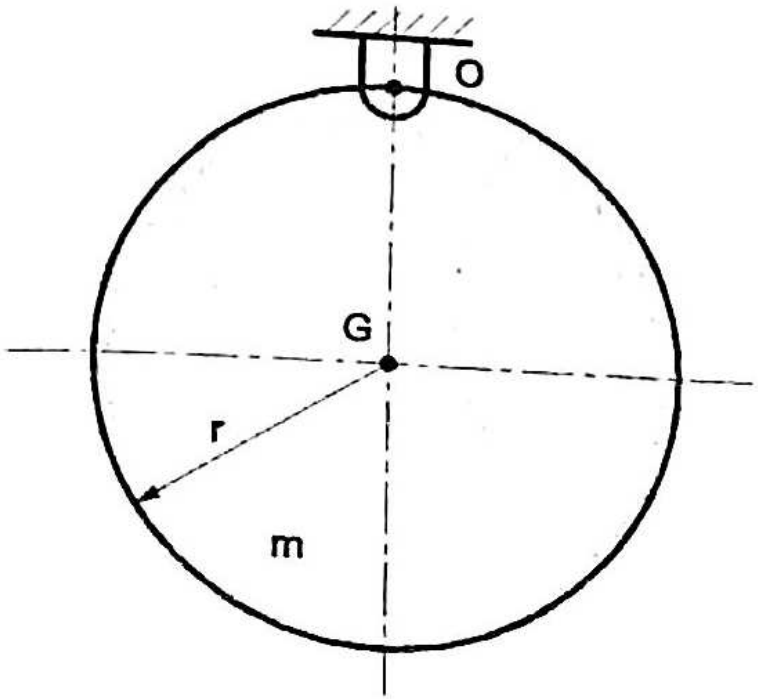

Energy Method :

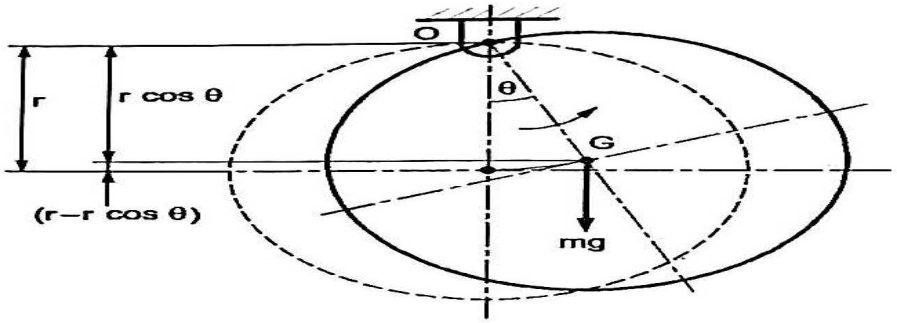

(c)
Fig. Ex. 5.38

- From Fig. Ex. 5.38(c)
- The kinetic energy of the cylindrical disc is

$$KE = \frac{1}{2} I_o \dot{\theta}^2$$

- The potential energy of the cylindrical disc

$$PE = mg\,(r - r\cos\theta)$$

- According to energy method,

$$\frac{d}{dt}(KE + PE) = 0$$

$$\frac{d}{dt}\left[\frac{1}{2} I_o \dot{\theta}^2 \; mg\,(r - r\cos\theta)\right] = 0$$

$$\frac{1}{2} I_o\, 2\,\dot{\theta}\,\ddot{\theta} + mgr\sin\theta\,\dot{\theta} = 0$$

$$I_o\,\ddot{\theta} + mgr\sin\theta = 0$$

$$I_o\,\ddot{\theta} + mgr\theta = 0 \qquad \ldots[\because \sin\theta \simeq \theta]$$

$$\ddot{\theta} + \left(\frac{mgr}{I_o}\right)\theta = 0 \qquad \ldots(c)$$

- This Equation (c) is the differential equation of motion for a given system. Comparing this equation with fundamental equation of simple harmonic motion, we get,

$$\omega_n^2 = \frac{mgr}{I_o} \qquad \therefore \quad \omega_n = \sqrt{\frac{mgr}{I_o}}\ \text{, rad/s}$$

- Therefore, natural frequency of oscillation for cylindrical disc is,

$$f_n = \frac{\omega_n}{2\pi} \qquad \text{or} \qquad f_n = \frac{1}{2\pi}\sqrt{\frac{mgr}{I_o}}\ \text{, Hz}$$

$$= \frac{1}{2\pi}\sqrt{\frac{mgr}{\frac{3mr^2}{2}}} \qquad f_n = \frac{1}{2\pi}\sqrt{\frac{2g}{3r}}\ \text{, Hz} \qquad \ldots\text{Ans.}$$

Atmiya University Rajkot

Determine the natural frequency of the system as shown in figure

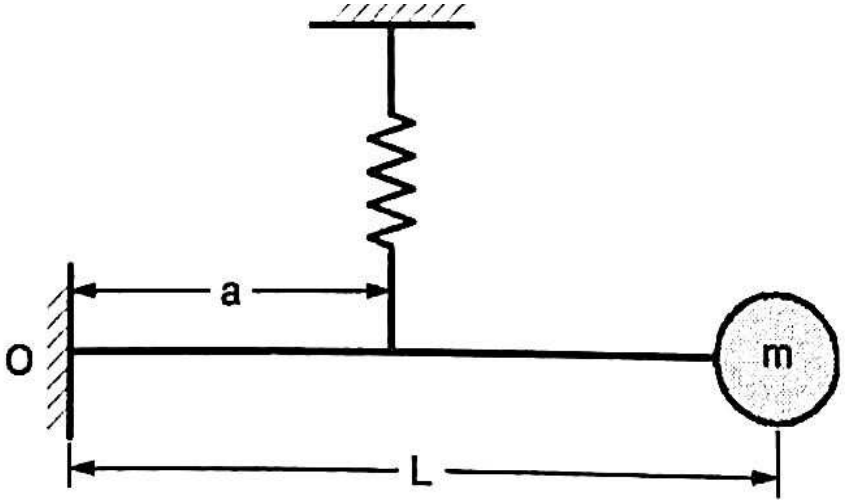

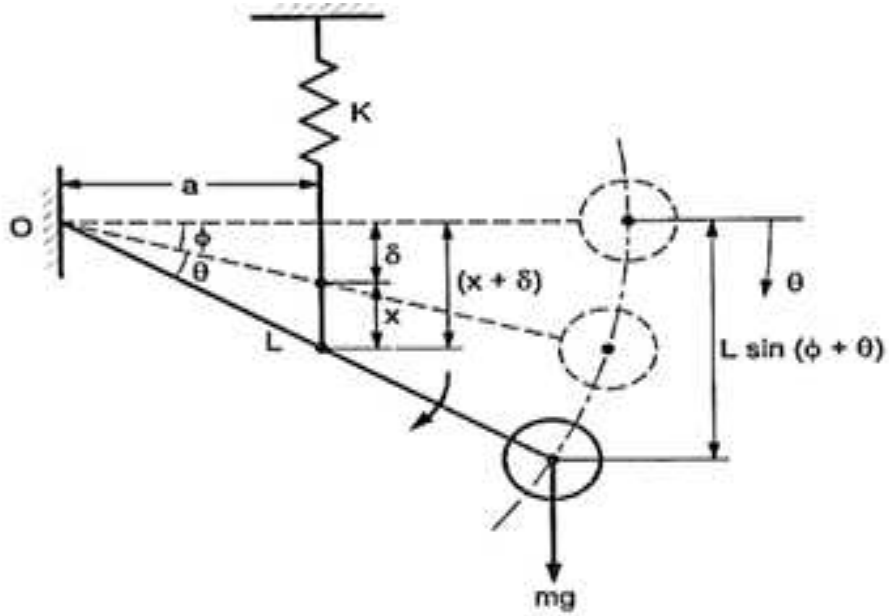

Energy Method :

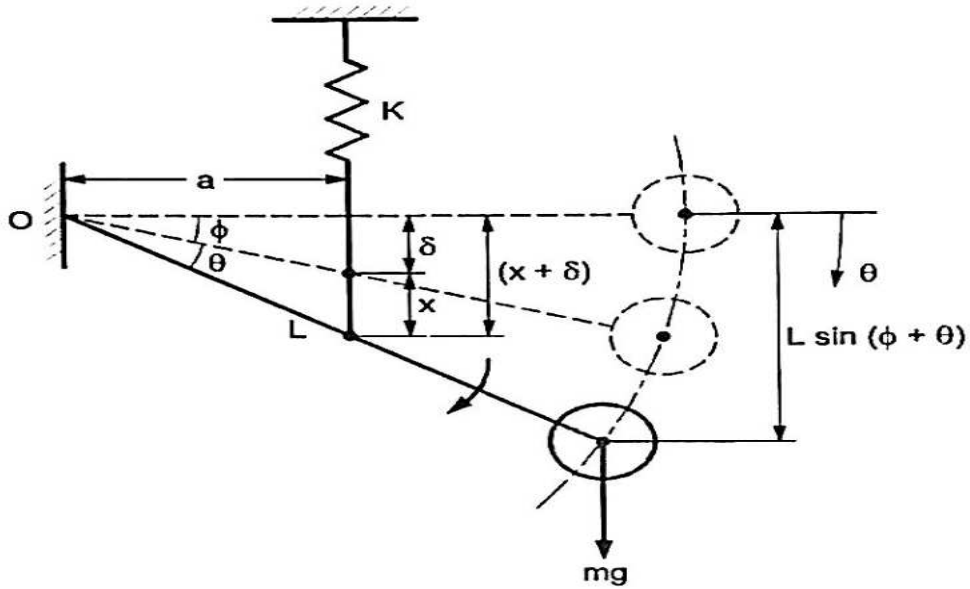

Fig. Ex. 5.32(d)

Atmiya University Rajkot

- From Fig. Ex. 5.32(d) ;
- The kinetic energy of mass $= \frac{1}{2} I_o \dot{\theta}^2$
- Potential energy of mass $= -\,mgL \sin(\phi + \theta) = -\,mgL \sin\theta$ [as ϕ is small, it is neglected]
- Potential energy of spring $= \frac{1}{2} K (x + \delta)^2$
- The total kinetic energy is, $KE = \frac{1}{2} I_o \dot{\theta}^2$
- The total potential energy is, $PE = -\,mgL \sin\theta + \frac{1}{2} K (x + \delta)^2$
- According to energy method,

$$\frac{d}{dt}(KE + PE) = 0$$

$$\therefore \frac{d}{dt}\left[\frac{1}{2} I_o \dot{\theta}^2 - mgL \sin\theta + \frac{1}{2} K (x + \delta)^2\right] = 0$$

$$\frac{1}{2} I_o\, 2\dot{\theta}\,\ddot{\theta} - mgL \cos\theta\,\dot{\theta} + \frac{1}{2} K\, 2\,(x + \delta)\,\dot{x} = 0$$

$$I_o \dot{\theta}\ddot{\theta} - mgL\,\dot{\theta} + K(x+\delta)\,\dot{x} = 0 \qquad \ldots[\because \cos\theta \simeq 1]$$

$$I_o \dot{\theta}\ddot{\theta} - mgL\,\dot{\theta} + K(a\theta+\delta)\,a\dot{\theta} = 0 \qquad \ldots[\because x = a\theta \text{ and } \dot{x} = a\dot{\theta}]$$

$$I_o \dot{\theta}\ddot{\theta} - mgL\,\dot{\theta} + Ka^2\theta\dot{\theta} + K\delta a\dot{\theta} = 0$$

$$\therefore\ I_o\ddot{\theta} - mgL + Ka^2\theta + K\delta a = 0$$

$$I_o\ddot{\theta} + Ka^2\theta = 0 \qquad \ldots[\because \text{from Equation (i) } K\delta a \simeq mgL]$$

$$\therefore\ \ddot{\theta} + \left(\frac{Ka^2}{I_o}\right)\theta = 0 \qquad \ldots(c)$$

- This Equation (c) is the differential equation of motion for a given system. Comparing this equation with the fundamental equation of simple harmonic motion, we get.

$$\omega_n^2 = \frac{Ka^2}{I_o} \qquad \therefore\ \omega_n = \sqrt{\frac{Ka^2}{I_o}} \qquad \therefore\ \omega_n = \sqrt{\frac{Ka^2}{mL^2}}\ \text{, rad/s}$$

Atmiya University Rajkot

Therefore, natural frequency of vibration for a given system is,

$$f_n = \frac{\omega_n}{2\pi} \qquad \text{or} \qquad f_n = \frac{1}{2\pi}\sqrt{\frac{Ka^2}{mL^2}}\text{, Hz} \qquad \textbf{...Ans.}$$

Determine the natural frequency of oscillation of a semicircular disc suspended at its center.

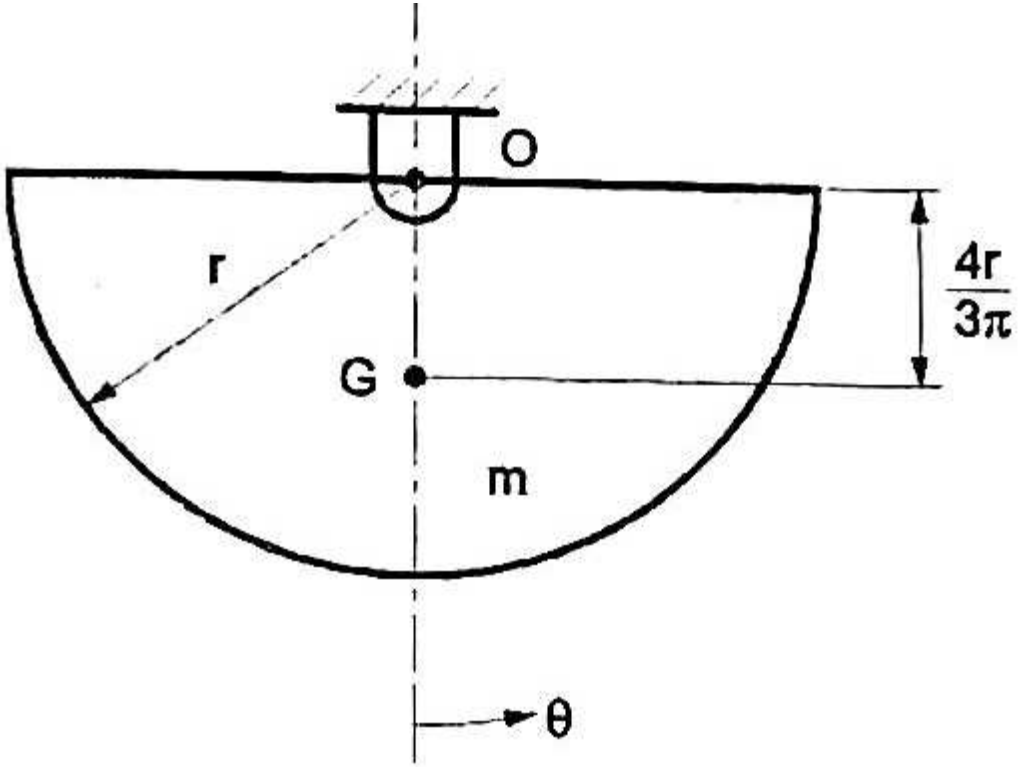

Energy Method :

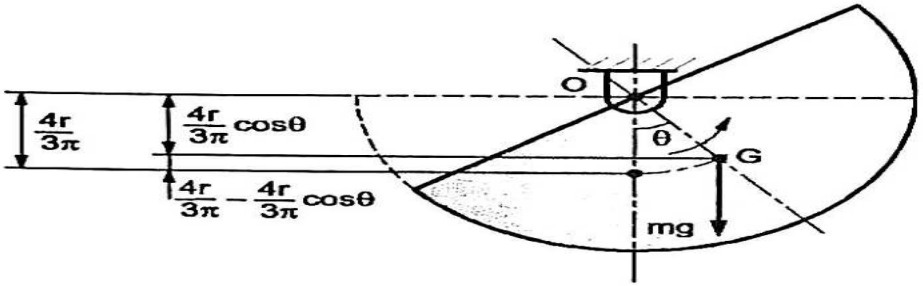

(c)
Fig. Ex. 5.39

- From Fig. Ex. 5.39(c) ;
- The kinetic energy of semicircular disc is

$$KE = \frac{1}{2} I_o \dot{\theta}^2$$

- The potential energy of semicircular disc is,

$$PE = mg\left(\frac{4r}{3\pi} - \frac{4r}{3\pi}\cos\theta\right)$$

Atmiya University Rajkot

According to Energy method,

$$\frac{d}{dt}(KE + PE) = 0$$

$$\therefore \frac{d}{dt}\left[\frac{1}{2} I_o \dot{\theta}^2 + mg\left(\frac{4r}{3\pi} - \frac{4r}{3\pi}\cos\theta\right)\right] = 0$$

$$\frac{1}{2} I_o\, 2\dot{\theta}\ddot{\theta} + mg\frac{4r}{3\pi}\sin\theta\,\dot{\theta} = 0$$

$$I_o\ddot{\theta} + mg\frac{4r}{3\pi}\theta = 0 \qquad \ldots[\because \sin\theta \simeq \theta]$$

$$\therefore \ddot{\theta} + \left(\frac{4\,mgr}{3\pi\, I_o}\right) = 0 \qquad \ldots(c)$$

- This Equation (c) is the differential equation of motion for a given system. Comparing this equation with fundamental equation of simple harmonic motion, we get,

$$\omega_n^2 = \frac{4mgr}{3\pi\, I_o} \qquad \therefore \omega_n = \sqrt{\frac{4mgr}{3\pi\, I_o}}\text{, rad/s}$$

- Therefore, natural frequency of oscillation for semicircular disc is,

$$f_n = \frac{\omega_n}{2\pi} = \frac{1}{2\pi}\sqrt{\frac{4mgr}{3\pi\, I_o}}\text{, Hz}$$

$$f_n = \frac{\omega_n}{2\pi} = \frac{1}{2\pi}\sqrt{\frac{4mgr}{3\pi\, mr^2/2}} \quad \text{or} \quad f_n = \frac{1}{2\pi}\sqrt{\frac{8g}{3\,\pi r}}\text{, Hz} \qquad \ldots\textbf{Ans.}$$

Determine the natural frequency of oscillation of a half solid cylinder of mass m and radius r when it is slightly displaced from its mean position and released

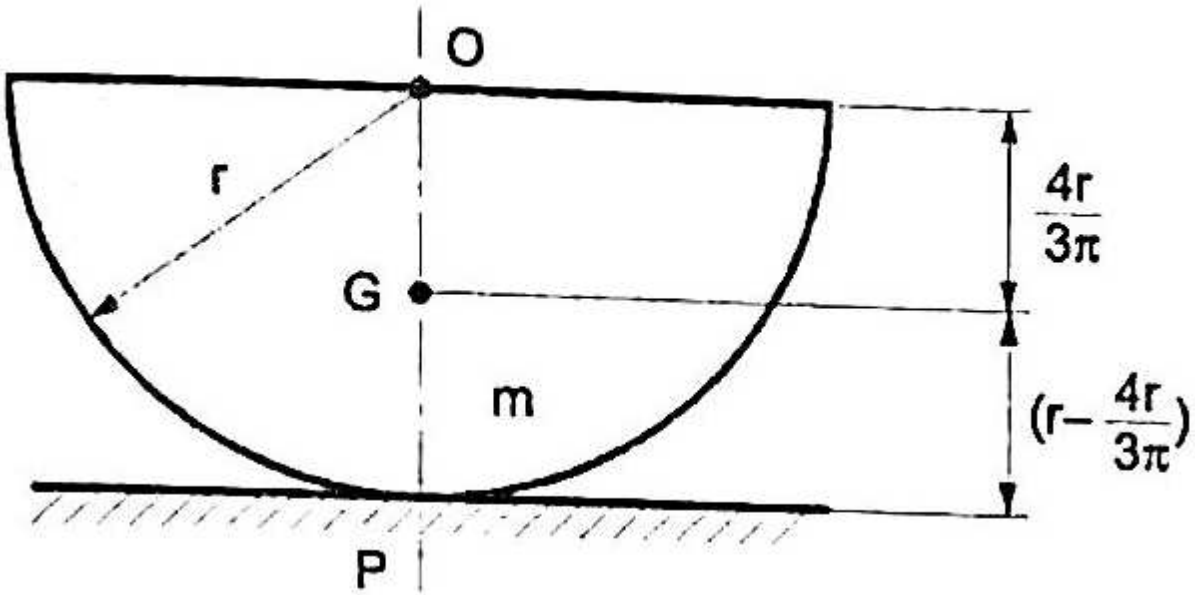

Energy Method :

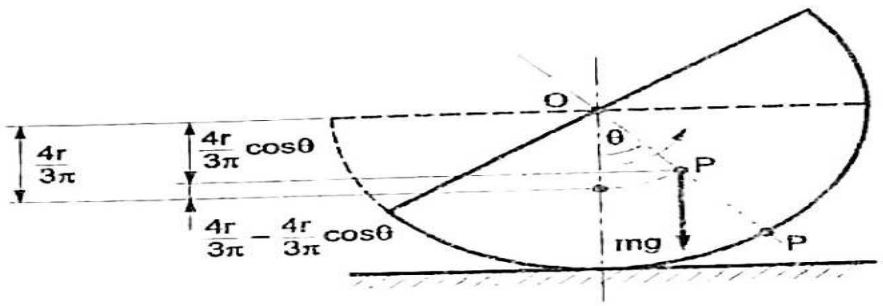

(c)
Fig. Ex. 5.40

- From Fig. Ex. 5.40(c)
- The kinetic energy of half solid cylinder is,

$$KE = \frac{1}{2} I_p \dot{\theta}^2$$

- The potential energy of half solid cylinder is,

$$PE = mg\left[\frac{4r}{3\pi} - \frac{4r}{3\pi}\cos\theta\right]$$

- According to Energy method,

$$\frac{d}{dt}(KE + PE) = 0$$

$$\therefore \frac{d}{dt}\left[\frac{1}{2} I_p \dot{\theta}^2 + mg\left(\frac{4r}{3\pi} - \frac{4r}{3\pi}\cos\theta\right)\right] = 0$$

$$\frac{1}{2} I_p\, 2\dot{\theta}\ddot{\theta} + mg\frac{4r}{3\pi}\sin\theta\,\dot{\theta} = 0$$

$$I_p\ddot{\theta} + mg\frac{4r}{3\pi}\theta = 0 \qquad \ldots[\because \sin\theta \simeq \theta]$$

$$\therefore \ddot{\theta} + \left(\frac{mg4r}{3\pi I_p}\theta\right) = 0 \qquad \ldots(c)$$

- This Equation (c) is the differential equation of motion for a given system, comparing this equation with fundamental equation of simple harmonic motion, we get,

$$\omega_n^2 = \frac{4mgr}{3\pi I_p} \qquad \therefore \omega_n = \sqrt{\frac{4mgr}{3\pi I_p}}, \text{ rad/s}$$

- Therefore, natural frequency of oscillation for half solid cylinder is,

$$f_n = \frac{\omega_n}{2\pi} = \frac{1}{2\pi}\sqrt{\frac{4mgr}{3\pi I_p}}, \text{ Hz} \qquad \ldots\textbf{Ans.}$$

- The mass moment of inertia of half solid cylinder about point 'p' can be determined as follows.

Atmiya University Rajkot

- Mass moment inertia about point O is,

$$I_o = \frac{mr^2}{2}$$

- Mass moment inertia about C.G. (i.e. at point G) is,

$$I_G = I_o - m\left(\frac{4r}{3\pi}\right)^2 \qquad ...[\because I_o = I_G + m\,(O\,G)^2\,]$$

$$\therefore\ I_G = \frac{mr^2}{2} - m\left(\frac{4r}{3\pi}\right)^2 \qquad \therefore\ I_G = m\left(\frac{r^2}{2} - \frac{16r^2}{9\pi^2}\right)$$

- Now, mass moment of inertia of body about point 'P' is,

$$\therefore\ I_p = I_G + m\,(GP)^2$$

$$\therefore\ I_p = m\left(\frac{r^2}{2} - \frac{16r^2}{9\pi^2}\right) + m\left(r - \frac{4r}{3\pi}\right)^2$$

$$\therefore\ I_p = m\left(\frac{r^2}{2} - \frac{16r^2}{9\pi^2}\right) + m\left(r^2 + \frac{16r^2}{9\pi^2} - \frac{8r^2}{3\pi}\right)$$

$$\therefore\ I_p = mr^2\left[\frac{1}{2} - \frac{16}{9\pi^2} + 1 + \frac{16}{9\pi^2} - \frac{8}{3\pi}\right]$$

$$\therefore\ I_p = mr^2\left[\frac{3}{2} - \frac{8}{3\pi}\right] = mr^2\left[\frac{9\pi - 16}{6\pi}\right]$$

- Hence, the natural frequency of oscillation of half solid cylinder is,

$$f_n = \frac{1}{2\pi}\sqrt{\frac{4mgr}{3\pi\, mr^2\,\frac{(9\pi - 16)}{6\pi}}} = \frac{1}{2\pi}\sqrt{\frac{24mgr}{3\pi\, mr^2\,\frac{(9\pi - 16)}{\pi}}}$$

or $$f_n = \frac{1}{2\pi}\sqrt{\frac{8g}{r\,(9\pi - 16)}}\ \text{, Hz} \qquad \textbf{...Ans.}$$

Atmiya University Rajkot

INTRODUCTION TO MECHANICAL VIBRATIONS (THEORY & PROBLEMS)

Dynamics of Machines (DOM)

(18BTMECC501)

Unit No.4

Introduction to Mechanical Vibrations

Prepared By:- Shivang S. Jani

Asst. Professor

Mechanical Engineering Department

Concept of Simple Harmonic Motion

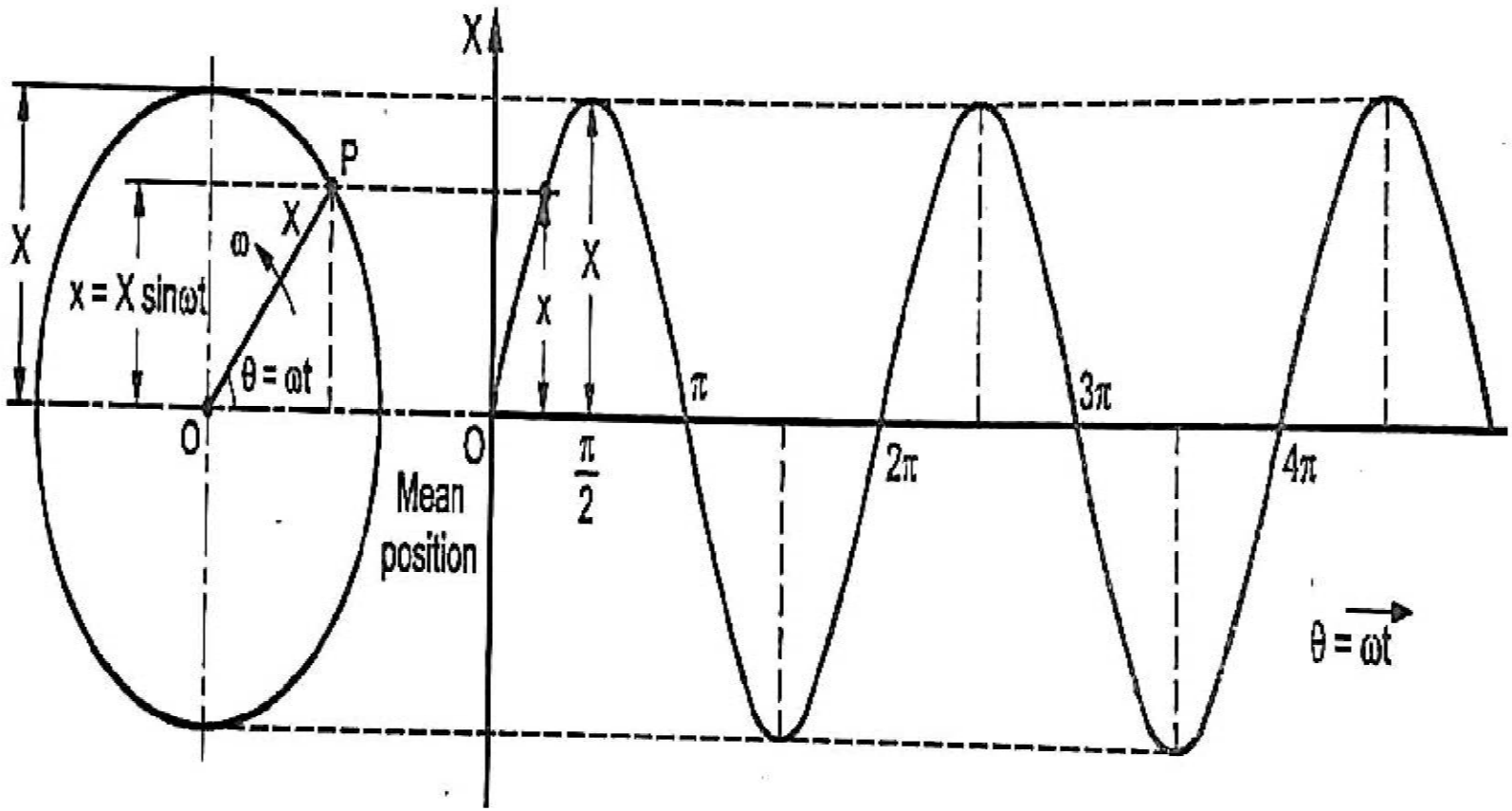

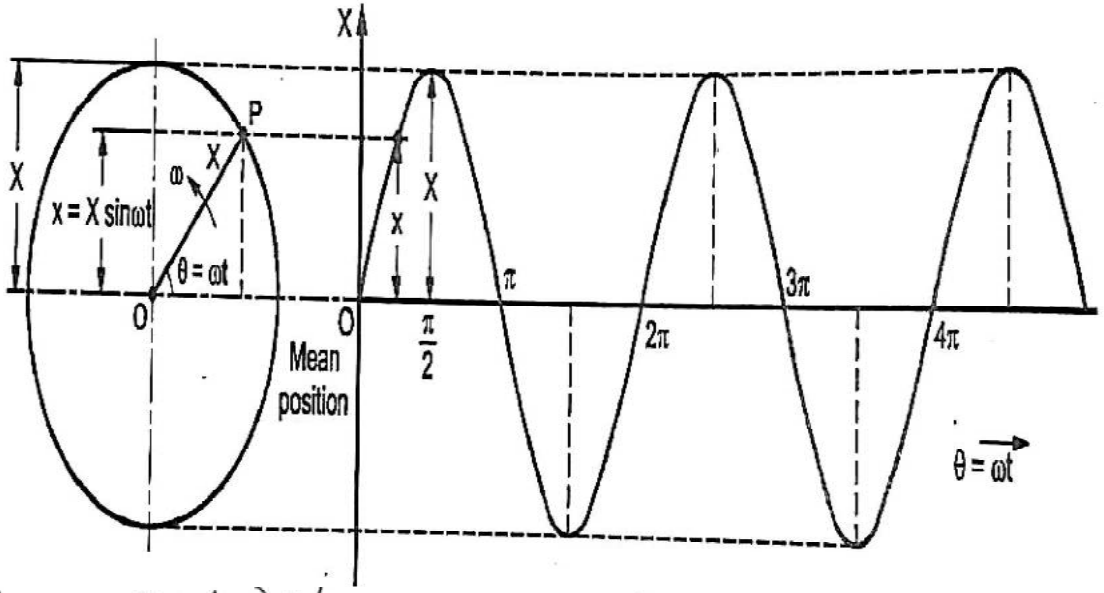

→ Consider a point 'P' moving around a circle with an angular speed 'ω' as shown in fig. above.

→ Let, x or x = Displacement of a point from mean position after time 't'.

X = Maximum displacement of point from mean position.

→ From above figure,

Displacement of point after time 't' is,

$$x = X \sin\theta$$

$$\therefore \boxed{x = X \sin\omega t} \quad - (1)$$

Atmiya University Rajkot

→ Velocity of Point after time 't' is,

$$\frac{dx}{dt} = \dot{x} \quad \text{(or)} \quad \dot{x} = \omega X \cos\omega t$$

→ Acceleration of Point after time 't',

$$\frac{d^2x}{dt^2} = \ddot{x} \quad \text{(or)} \quad \ddot{x} = -\omega^2 x \quad (\because \ddot{x} = -\omega^2 X \sin\omega t)$$

$$\therefore \boxed{\ddot{x} = -\omega^2 x} \quad - (2)$$

→ From equation (2), it can be seen that, the acceleration is directly Propostional to the displacement from mean Position. Such a motion, whose acceleration is Propostional to displacement from mean Position & is directed towards the mean Position, is known as Simple Harmonic Motion (SHM).

Atmiya University Rajkot

→ The equation (2) can be written as,

$$\boxed{\ddot{x} + \omega^2 x = 0} \quad - (3)$$

→ The equation (3) is known as Fundamental equation of Simple Harmonic motion.

Types of Vibration

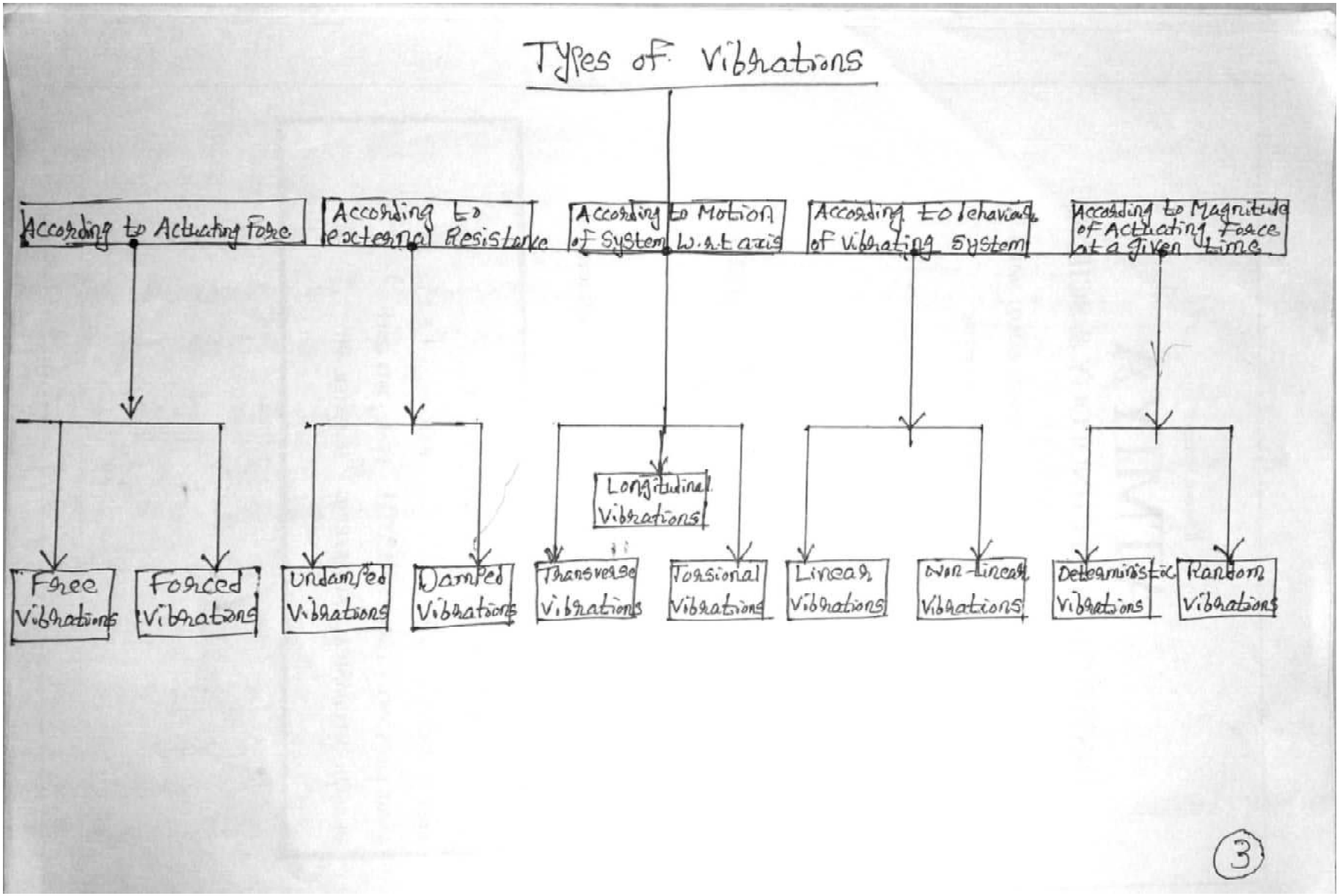

(1) According to Actuating Force.

(i) Free vibrations

→ If the external force is removed after giving an initial displacement to the system, then the system vibrates on its own due to internal elastic forces. Such type of vibrations are known as free vibrations.

→ The frequency of free vibrations is known as free or natural frequency (f_n)

→ E.g – oscillation of simple pendulum is an example of free vibrations.

(ii) Forced vibrations

→ If a system or a body is subjected to a periodic external excitation force, then the resulting vibrations are known as forced vibrations.

→ E.g – vibrations of I.C engine, electric motor, centrifugal pump etc.

Atmiya University Rajkot

(2) According to External Resistance

(i) Undamped Vibrations

→ If there is no external resistance to the vibration of a system, then such vibrations are known as undamped vibrations

→ The negligible resistance (damping) is also considered as an undamped condition

→ E.g - In case of simple pendulum is an example of undamped free vibrations.

→ Theoretically, the free undamped vibrations continue indefinitely because there is no external resistance (damping), but the amplitude of vibrations decay continuously & vanishes ultimately. because of some negligible air resistance (air damping).

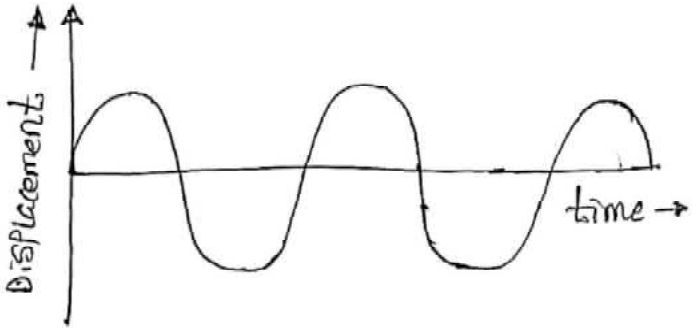

(a) Undamped vibrations

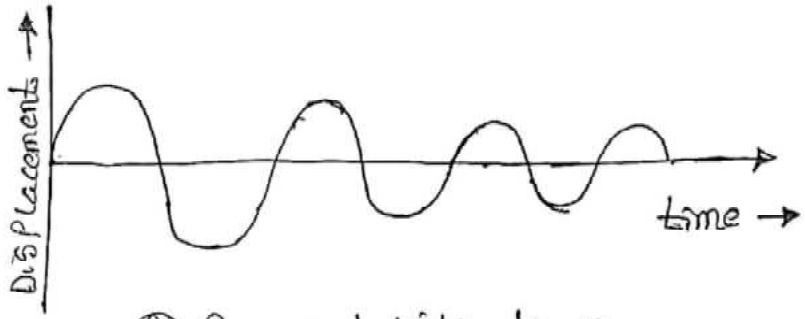

(b) Damped Vibrations

Atmiya University Rajkot

(ii) Damped Vibrations

→ If an external resistance is provided to the vibrating system, then such vibrations are known as damped vibrations

→ In damped vibrations. the external resistance, known as damping, opposes the vibrations. Due to this there is reduction in amplitude of vibration every cycle & eventually vibrations die out.

→ Such vibrations are also known as transient vibrations

→ E.g - vehicle moving over a rough road with shock absorber.

(3) According to Motion of System with respect to Axis

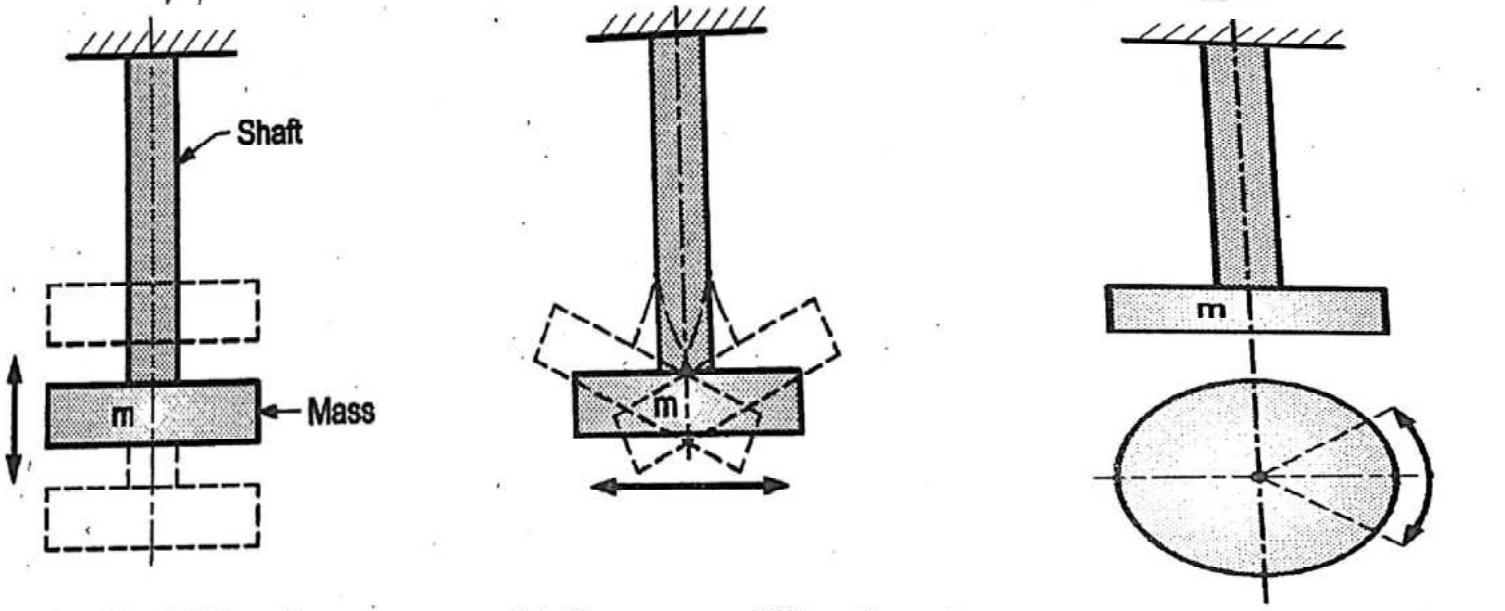

(a) Longitudinal Vibrations (b) Transverse Vibrations (c) Torsional Vibrations

Atmiya University Rajkot

(1) Longitudinal vibrations

→ If the disc moves up + down along the axis of shaft, then the vibrations are known as longitudinal vibrations.

→ In longitudinal vibrations, the shaft is subjected to alternate direct tensile & compressive stresses.

→ Another example of longitudinal vibrations is ~~known as~~ vibrations of spring-mass system along the axis of spring.

(ii) Transverse vibrations

→ If the disc moves approximately perpendicular to the axis of shaft, then the vibrations are known as transverse vibrations.

→ In transverse vibrations, the shaft is subjected to alternate bending stresses

(iii) Torsional vibrations

→ If the disc rotate about the axis of shaft, such that the shaft gets twisted & untwisted alternately, then the vibrations are known as torsional vibrations

→ In torsional vibrations, the shaft is subjected to torsional shear stresses

Atmiya University Rajkot

According to behaviour of vibrating system

(i) Linear vibrations

→ In a vibrating system, if basic components i.e spring, mass & damper, behave linearly then the resulting vibrations are known as linear vibrations

→ In linear vibrations, the differential equation governing the motion of the vibrating system is linear.

→ Eg - vibration of spring - mass system along the axis of system

→ (ii) Non - Linear Vibrations

→ If any of the three basic Components of the vibrating System behave non-Linearly, then the resulting vibrations are known as Non-Linear vibrations.

→ In non-Linear vibrations, the differential equation governing the motion of the vibrating System is non-Linear.

→ E.g - Motion of spring-mass System in transverse direction (along the direction perpendicular to the axis of System)

(5) According to Magnitude of Actuating force at a given time

(i) Deterministic vibration

→ If the magnitude of the external excitation force acting on a vibrating system is known at any given time, then the excitation is known as deterministic, & the resulting vibrations are known as determinsitic vibrations.

→ The characteristic curve for such vibrations is shown in fig. (a)

→ E.g - Vibrations caused by rotating unbalanced mass.

Atmiya University Rajkot