Atmiya University

Question Bank

Faculty: Science

Programme: B.Sc. Mathematics

Semester:III

Course Code:21BMTCC303

Course Title: Core 7 Discrete Mathematics

Sr. No.	Question	Option A	Option B	Option C	Option D	Correct Answer
1	Let$(L, \leq)$ be a lattice.For $a,b \in L$,$glb\ of\ \{a,b\}$_____.	$a * b$	$a \oplus b$	$a \leq b$	$a \geq b$	A
2	If $x \leq a$ and $x \leq b \Leftrightarrow$_____.	$x \leq a \oplus b$	$x \leq a * b$	$x \geq a \oplus b$	$x \geq a * b$	B
3	The Cartesian product of sets A and B is$\{< a,b > / a \in A, b \in B\}$ =_____	$A \times A$	$B \times B$	$A \times B$	$B \times A$	C
4	If set A has m elements and set	$m \times n$	n	mn	m	C

Atmiya University Rajkot

	B has n elements then $A \times B$ has _____elements.					
5	If R is a relation from A to B $\Leftrightarrow$ _____	$R = A \times B$	$R \subset A \times B$	$R \supset A \times B$	None of these	B
6	If relation R is reflexive then for any $x \in X$,_____	xRy	yRx	xRx	yRy	C
7	If relation R is symmetric then for any,$x, y \in X, xRy \Rightarrow$ _____	xRy	yRx	xRx	yRy	B
8	If relation R is transitive then for any $x, y, z \in X, xRy$ & $yRz \Rightarrow$ _____	xRz	zRx	A & B both	None of these	A
9	Which of the following relation is Anti-symmetric : For any $x, y \in X$,	$xRy \Rightarrow yRx$	xRy & yRx	xRy & $yRz \Rightarrow xRz$	xRy & $yRx \Rightarrow x = y$	D
10	If R is a equivalence relation on set X then $[x] = [y] \Leftrightarrow$ _____.	xRy	yRx	$x = y$	$x \neq y$	A
11	If for every $x, y \in X, (x, y) \in R \Rightarrow (y, x) \notin R$, then the relation R on set X is said to be	reflexive	asymmetric	symmetric	irreflexive	B
12	If for every $x \in X, (x, x) \notin R$, then the relation R on set X is said to be	Anti-symmetric	asymmetric	Symmetric	Irreflexive	D

Abdul Wali Khan University Mardan

13	If relation R on set X is reflexive, symmetric & transitive then R is said to be	Equivalence Relation	Partial Order Relation	Equivalence Class	None of these	A
14	A partial order relation R is transitive, reflexive and	Anti-symmetric	asymmetric.	symmetric	irreflexive	A
15	{…,-5,-2,1,4,7,…} is an equivalence class of relation R where, $xRy = x - y$ is divisible by	5	4	3	2	C
16	Relation $R = \{(1,1)(2,2)(1,3)(3,1)\}$ on $x = \{1,2,3\}$ is	Reflexive	Symmetric	Anti-symmetric	Transitive	B
17	If n is any positive integer then the set of all factors of n is =_____	S_n	f_n	S_{30}	S_4	A
18	Let A={a,b,c}for poset (P(A),⊆) cover of {c}are.....	$\{a,c\}$	$\{b,c\}$	$\{a,b,c\}$	Both A & B	D
19	If $S = \{a,b,c\}$ then $A = \{\{a,b\},\{b,c\}\}$ is	Not cover but partition of S	Not cover &not partition of S	Cover & partition both of S	Cover of S but not partition	D
20	Let S be a non-empty set.Let $A = \{A_1, A_2, A_3, \dots, A_n\}$ where each A_i is a subset of S .If A is a cover of S then_____	$\bigcup_{i=1}^{n} A_i = S$	$\bigcup_{i=1}^{n} A_i = A$	$\bigcap_{i=1}^{n} A_i = S$	$\bigcap_{i=1}^{n} A_i = A$	A
21	If A is a partition of S then_____	$\bigcup_{i=1}^{n} A_i = S$	$A_i \cap A_j = \emptyset$	A & B both	only option B	C

Atmiya University Rajkot

22	Let $(X, \leq)$ be a poset. If for every $x, y \in X$,either xRy or yRx then R is said to be	partial order set	totally order set	equivalence relation	Equivalence class	B
23	Who is the least member of poset$(S = \{2,3,6,12,24,36\}, D)$?	2	3	2 & 3	6	A
24	Who is the minimal member of poset$(S = \{2,3,6,12,24,36\}, D)$?	2	3	2 & 3	6	C
25	Which of the following is true for (S, D) where $S = \{2,3,6,12,24,36\}$	(S, D) is poset but not lattice	(S, D) is poset & lattice both	(S, D) is neither poset & nor lattice	(S, D) is not poset but lattice	A
26	If $a \leq x$ and $b \leq x \Leftrightarrow$ _____.	$a \oplus b \leq x$	$a * b \leq x$	$a \oplus b \geq x$	$a * b \geq x$	A
27	If $(L, \leq)$ be a poset then _____ is called dual of poset	$(L, \geq)$	$(L, +)$	$(L, =)$	$(L, \leq)$	A
28	Let $(L, \leq)$ be a distributive inequality. For $a, b, c \in L$ then _____.	$a \oplus (b * c) \leq (a \oplus b) * (a \oplus c)$	$a * (b \oplus c) \geq (a * b) \oplus (a * c)$	A & B both	None of these	C
29	Let $(L, \leq)$ be a lattice. For $a, b \in L, a \leq b \Leftrightarrow$ _____,	$a * b = a$	$a * b = b$	$a \oplus b = a$	None of these	A
30	Let $(L, *, \oplus)$be a lattice. For $a \in L, a * a =$ _____.	a^2	2a	a	None of these	C
31	If L satisfy commutative, associative & absorption law with respect to $*$ & $\oplus$, then L is said to be	poset	Lattice as a poset	Lattice as an algebraic structure	chain	C

Alimya University Rajkot

32	Let $(L,*,\oplus)$ be a lattice. For $a \in L, a \oplus a =$ _____.	a^2	2a	a	None of these	C
33	Which of the following is sublattice of lattice $(S_{30},*,\oplus)$?	{1,2,10,30}	{1,5,6}	{1,3,6,15}	{1,2,5,15}	A
34	Let $(L,*,\oplus)$ and $(S,\cap,\cup)$ be two lattices. Give the notation for direct product of lattice_____.	$(L \times S,\cdot,+)$	$(L \times S,*,\oplus)$	$(L \times S,+,\cdot)$	None of these	A
35	A homomorphism $g: L \to L$ where L is lattice is called_____.	endomorphism	automorphism	isomorphism	None of these	A
36	An isomorphism $g: L \to L$ where L is lattice is called_____.	endomorphism	automorphism	isomorphism	None of these	A
37	Let $(L,*,\oplus)$ and $(S,\cap,\cup)$ be two lattices .A mapping $f: L \to S$ is lattice homomorphism and moreover f is one-one & onto then f is said to be	endomorphism	Lattice isomorphism	automorphism	None of these	B
38	The direct product of two lattices is a	posets	Totally ordered sets	lattice	None of these	C
39	Let $(P,\leq)$ and $(Q,\leq')$ be two posets . A function $f: P \to Q$ is said to be order isomorphism if	f is one one-one & onto	$a \leq b \Leftrightarrow f(a) \leq' f(b)$	A & B both	None of these	C
40	Which of the following is true for $(P(A),\cap,\cup)$?	$(P(A),\cap,\cup)$ is poset	$(P(A),\cap,\cup)$ is lattice	$(P(A),\cap,\cup)$ is poset & lattice both	$(P(A),\cap,\cup)$ is poset but not lattice	C
41	Let $(L,*,\oplus)$ be a lattice.If any subset of L has glb & lub then L is said to be	Bounded lattice	Complete lattice	Complemented lattice	Distributive lattice	B

Atmiya University Rajkot

42	Let $(L,*,\oplus)$ be a lattice.If glb & lub of the set L exist in L then the lattice L is said to be	Bounded lattice	Complete lattice	Complemented lattice	Distributive lattice	A
43	In bounded lattice, glb of L=_____ & lub of L=_____.	1,0	0,0	1,1	0,1	D
44	Which of the following is algebraic structure of bounded lattice ?	$(L,*,\oplus,',0,1)$	$(L,*,\oplus)$	$(L,*,\oplus,0,1)$	None of these	C
45	Let $(L,*,\oplus,0,1)$ be a bounded lattice for any $\in L, a*0=$ ____.	0	a	1	None of these	A
46	Let $(L,*,\oplus,0,1)$ be a bounded lattice for any $\in L, a*1=$ ____.	0	a	1	None of these	B
47	Let $(L,*,\oplus,0,1)$ be a bounded lattice for any $\in L, a\oplus 0=$ ____.	0	a	1	None of these	B
48	Let $(L,*,\oplus,0,1)$ be a bounded lattice for any $\in L, a\oplus 1=$ ____.	0	a	1	None of these	C
49	For any $\in L, a\oplus a'=$ ____.	0	a	1	a'	C
50	For any $\in L, a*a'=$ ____.	0	a	1	a'	A
51	Let $(L,*,\oplus,0,1)$ be a bounded lattice if $\forall\, a\in L\ \exists b\in L \ni a*b=0$ & $a\oplus b=1$ then b is said to be	Complete lattice	Complemented lattice	Distributive lattice	Complement of an element a	D
52	Give the complement of an element 15 of the lattice $(S_{30},*,\oplus)$.	1	2	5	10	B
53	Let $(L,*,\oplus,0,1)$ be a complemented lattice then which of the following is true ?	Complement of any element exist in L.	Complement of some element exist in L.	Complement of each element exist in L.	Complement of each element exist .	C
54	Complemented lattice is denoted by	$(L,*,\oplus,',0,1)$	$(L,*,\oplus)$	$(L,*,\oplus,0,1)$	None of these	A

Kalyani University Kalyani

55	If $L = \{\emptyset, \{1\}, \{1,2\}\}$ then which of the following is true for L .	complemented lattice but not bounded lattice .	bounded lattice and complemented lattice both.	bounded lattice but not complemented lattice.	None of these	C
56	Let $(L,*,\oplus)$ be a distributive lattice if for every $a,b,c \in L, a*(b\oplus c)$___$(a*b)\oplus(a*c)$	$\leq$	$\geq$	$=$	$\neq$	C
57	Let $(L,*,\oplus)$ be a distributive lattice if for every $a,b,c \in L, a\oplus(b*c)$___$(a\oplus b)*(a\oplus c)$	$\leq$	$\geq$	$=$	$\neq$	C
58	Give the complement of an element 10 of the lattice $(S_{30},*,\oplus)$.	3	5	2	6	A
59	Give the complment of an element 6 of the lattice $(S_{30},*,\oplus)$.	3	5	2	6	B
60	Let $(L,*,\oplus)$ be a lattice if for every $a,b,c \in L, a*(b\oplus c)$___$(a*b)\oplus(a*c)$& $a\oplus(b*c)$___$(a\oplus b)*(a\oplus c)$then L is said to be	Complete lattice	Complemented lattice	Distributive lattice	Complement of an element a	C
61	Let $(B,*,\oplus,',0,1)$ be a Boolean algebra.$\forall a,b \in L, a \leq b \Leftrightarrow a*b' =$ _____.	0	1	a	b	A
62	Let $(B,*,\oplus,',0,1)$ be a Boolean algebra.$\forall a,b \in L, a \leq b \Leftrightarrow a'\oplus b ==$ _____.	0	1	a	b	B
63	Let $(B,*,\oplus,',0,1)$ be a Boolean algebra.$\forall a,b \in L, (a*b)' =$ _____.	$(a*b)'$	$a'*b'$	$a'\oplus b'$	$(a\oplus b)'$	C

Atmiya University Rajkot

64	Let $(B,*,\oplus,',0,1)$ be a Boolean algebra.$\forall a,b \in L,(a \oplus b)' =$ _____.	$(a*b)'$	$a'*b'$	$a' \oplus b'$	$(a \oplus b)'$	B
65	$a' \oplus (a*b) =$ _____.	$a' \oplus b$	$b' \oplus a$	$a'*b$	$a'*a$	A
66	$(1*a) \oplus (a*a') =$ _____.	1	a'	0	a	D
67	$(a*b) \oplus (a*b')$	b	0	a	1	C
68	$a \oplus (a'*b) =$ _____.	0	$a*b$	1	$a'*b$	B
69	$(a*b*c) \oplus (a*b) =$ _____.	$a*b$	$a \oplus b$	1	0	A
70	Let $(B,*,\oplus,',0,1)$ be a Boolean algebra.If $a \in B$, a is cover of 0=glb of B then a is said to be	Atom's in Boolean algebra	poset	Uniquely complemented lattice	Distributive lattice	A
71	Let $(B,*,\oplus,',0,1)$ be a Boolean algebra. $\forall a \in B$ there is an element $x \in B$ such that $0 < x < a$ then a is said to be	Atom's in Boolean algebra	Not atom's in Boolean algebra	Cover of an element	None of these	B
72	Give the atom's in Boolean algebra $(S_{30},*,\oplus,',1,30)$	2	3	5	All above	D
73	A non-zero element a of Boolean algebra $(B,*,\oplus,',0,1)$ is an atom if and only if $\forall x, x \in B$	either $a*x=0$ or $a*x=a$	$a*x=0$ and $a*x=a$	$a*x=0$	$a*x=a$	A
74	If a & b are distinct atom's of Boolean algebra $(B,*,\oplus,',0,1)$ then	$a*b=0$	$a \oplus b=0$	$a*b=1$	$a \oplus b=1$	A
75	Let $(B,*,\oplus,',0,1)$ be a Boolean algebra.If x is non-zero element	$a=x$	$a \le x$	$a \ge x$	$a \ne x$	B

Bharathiar University Patrol

	of B then ∃ an atom $a \in B$ ∋					
	Which theorem state that : If $(B,*,\oplus,',0,1)$ is a Boolean algebra and A is the set of all atom's of Boolean algebra B then Boolean algebra $(B,*,\oplus,',0,1)$ is isomorphic to Boolean algebra $(P(A),\cap,\cup,c,\emptyset,A)$.	Stone's representation theorem	Unique representation theorem	Distributive inequalities	Modular inequalities	A
7	**Which theorem state that :** If $(B,*,\oplus,',0,1)$ is a finite Boolean algebra then every non-zero element of B can be expressed uniquely as the sum of atoms of Boolean algebra B.	Stone's representation theorem	unique representation theorem	Distributive inequalities	Modular inequalities	B
8	Let $(B,*,\oplus,',0,1)$ be a Boolean algebra.$\forall a,b \in L, a \leq b \Leftrightarrow$ _____.	$a' \oplus b = 1$	$a * b' = 0$	$b' \leq a'$	All of them	D
9	Give the atom's in Boolean algebra $(P(A),\cap,\cup,c,\emptyset,A)$.	$\{a\},\{b\},\{c\}$	$\{a,b\}$	$\{a,c\}$	$\{a,c\}$	A
30	Let $(B,*,\oplus,',0,1)$ be a Boolean algebra.$\forall a,b \in L, a \leq b \Leftrightarrow$ _____.	$a' \leq b'$	$b' \leq a'$	$a' \leq b$	$a \leq b'$	B
31	In adjacent minterms m_i& m_j have same variables, it may differ.....	exactly in one variable	more than 1-variable	less than 1-variable	none of these	A
32	The sum of product canonical form =.....	sum of maxterms	product of minterms	sum of minterms	product of maxterms	C
33	The sum of all minterms in n variable is _____.	n	0	1	n+1	C

Atmiya University Rajkot

84	The Karnaugh map is useful to minimize the	sum of product canonical form	product of sum canonical form	sum of maxterms	product of maxterms	A
85	The product of sum canonical form = ...	sum of product	product of sum	sum of minterms	product of maxterms	D
86	If m_i & m_j are distinct minterms in n-variables then.....	$m_i \oplus m_j = 1$	$m_i * m_j = 0$	$m_i * m_j = 1$	$m_i \oplus m_j = 0$	B
87	Simplify the Boolean expression :$(x*y)'\oplus(x\oplus y)'$ =.....	$(x'\oplus y')$	$(x*y)'$	A & B both	None of these	C
88	The expression ${x_1}^{a_1}\oplus{x_2}^{a_2}\oplus \dots \oplus{x_n}^{a_n}$ in n-variables is a minterm in n-variables where $a_i = 0$ or $a_i = 1$and ${x_i}^0$ = ____ and ${x_i}^1$ = ____	x_i, x_i	x_i', x_i	x_i, x_i'	None of these	B
89	Which of the following two sets are disjoint?	{1, 3, 5} and {1, 3, 6}	{1, 2, 3} and {1, 2, 3}	{1, 3, 5} and {2,4, 6}	{1, 3, 5} and {3, 4, 6}	C
90	Let $(B,*,\oplus,',0,1)$ be a Boolean algebra then $A(1)$ = ____.	A	∅	0	1	A
91	If B is a Boolean Algebra, then which of the following is true	B is a finite but not complemented lattice.	B is a finite, complemented and distributive lattice	B is a finite, distributive but not complemented	B is not distributive lattice.	B

Atmiya University Rajkot

2	The expression $x_1^{a_1} \oplus x_2^{a_2} \oplus \ldots \oplus x_n^{a_n}$ in n-variables is a maxterm in n-variables where $a_i = 0$ or $a_i = 1$ and $x_i^0 =$ ____ and $x_i^1 =$ ____	x_i, x_i	x_i', x_i	lattice x_i, x_i'	None of these	C
3	How many minterms involving two variable is ?	4	2	3	8	A
4	How many minterms involving three variable is ?	4	2	3	8	D
5	How many minterms involving four variable is ?	8	16	32	4	B
6	$\sum_{i=0}^{2^n-1} m_i =$ ____.	2	0	1	n	C
97	Every Boolean expression can be expressed as the sum of minterms such a representation is called	The product of sum canonical form	The sum of product canonical form	Sum canonical form	Product canonical form	B
98	Every Boolean expression can be expressed as the product of maxterms such a representation is called	The product of sum canonical form	The sum of product canonical form	Sum canonical form	Product canonical form	A
99	Which of the following is adjacent minterms ?	$xyz \,\&\, xyz'$	$xyz \,\&\, xy'z'$	$x'y'z \,\&\, xy'z'$	None of these	A
100	Let $(B, *, \oplus, ', 0, 1)$ be a Boolean algebra then $A(0) =$ ____.	A	Ø	0	1	B

Rajkot Adhiya University

Program	B.Sc. Mathematics
Semester	1
Course Code	21BMTCC103
Course Title	Mcq of differences calculus
Name of Student	Dadhaniya shreena a.
Enrollment no.	220803001

Sr. No	Question with options	Answer	Unit No.	Marks per Question
1	Q. The function f(x) =[x], where [x] denotes the greatest integer function, is continues at.	D. 1.5		1
	A) 4			
	B) -2			
	C) 1			
	D) 1.5			
2	Q. The coefficient of x in the Maclaurin's series expansion of e^sin x is equal to	B. 1		1
	A) 2			
	B) 1			
	C) 3			
	D) 0			
3	Q. The coefficient of the x^5 term in the maclaurin's polynomial for sin(2x) is	D. 0.26667		1
	A) 0			
	B) 0.08333			
	C) 0.016667			
	D) 0.26667			
4	Q. If the principal part of the Laurent's series vanishes then the Laurent's series reduces to	C. Taylor's series		1
	A) Cauchy's series			
	B) Maclaurin's series			
	C) Taylor's series			
	D) None of the above			
5	Q. The value of c in Lagrange's theorem for the function |x| in the interval [-1, 1] is	D. None existen		1
	A) 0			

			t in the interval		
	B)	1/2			
	C)	-1/2			
	D)	Non existent in the interval			
6	Q.	The value of c of the cauchy's mean value theorem for f(x) = e^x & g(x) = e^-x in [2,3] is.....	B. 2.5		1
	A)	2			
	B)	2.5			
	C)	3			
	D)	1.5			
7	Q.	If | f(x) - l|<€ whenever |x-a| < then	C. F(x) converges to L		1
	A)	F(x) is continues at x= a			
	B)	F(x) is differentiable			
	C)	F(x) converges to L			
	D)	F(x) is continues and differentiable			
8	Q.	Radius of curvature of the curve p^2= ar is	C. 2p^3/a^2		1
	A)	P^2/a^2			
	B)	2p			
	C)	2p^3/a^3			
	D)	P^3			
9	Q.	The value of c in rolles theorem for the function f(x)= cos x/2 on [π, 3π]	B. 2π		1
	A)	0			
	B)	2π			
	C)	π/2			
	D)	3π/2			
10	Q.	1+x^2/2! +x^4/4! +x^6/6!	A. Sinhx		1
	A)	Sinhx			
	B)	Coshx			
	C)	Cosx			
	D)	Sinc			

Atmiya University Rajkot

Program	B.Sc. Mathematics
Semester	1
Course Code	21UMTCC101
Course Title	Calculus
Name of Student	Dhoriya Chetan
Enrollment no.	220803002

Sr. No	Question with options	Answer	Unit No.	Marks per Question
1	Q. Lim x tends to 0 (sin^-1 x)/x A) 0 B) 1 C) 2 D) 3	B	1	1
2	Q. The value of lim x tends to 0 tanx/x A) 4 B) 3 C) 2 D) 1	D	1	1
3	Q. If Zay = x(b+a), then y = A) Constant B) 0 C) a+b D) None	B	2	1
4	Q. Find n th derivative of y=e^ax + b A) a=cos(ax+b+nπ/2) B) a^n(e^ax + b) C) 0 D) None	B	2	1
5	Q. cos x = A) 1-x^2/2!+x^4/4!+..... B) 11-x^2/2!+x^4/4!+..... C) x^2/2!+x^4/4!+.....	A	3	1

6	Q.	sin x=	B	3	1
	A)	1+x+x^2+...			
	B)	x-x^3/3!+x^5/5!+...			
	C)	1-x^2/2!+x^4/4!+.....			
	D)	1-x+x^4+.....			
7	Q.	function is not continues at point 0	C	4	1
	A)	x			
	B)	x^2			
	C)	|x|			
	D)	5			
8	Q.	If f,g and h are defined on a deleted nbhd of a point 'a' such that f(x).....g(x).....h(x) and lim x tends to 0 f(x)=lim x tends to 0 h(x)=l then g(x) exist and value is l	A	4	1
	A)	<=,<=			
	B)	=,=			
	C)	<,<			
	D)	>=,=>			
9	Q.	How many Asymptots parallel to y axis for function x^2y^2-4x^2+9y^2=0	C	5	1
	A)	0			
	B)	1			
	C)	2			
	D)	4			
10	Q.	At (x1,y1) and (x2,y2) Δ value is equal to zero then we can say it is	B		1
	A)	Node			
	B)	Cusp			
	C)	Conjugat			
	D)	None			

Institute	AU
Program	B.Sc. Mathematics
Semester	1
Course Code	21BMTCC101
Course Title	Diffrential calculus
Name of Student	Meena hiral bharat singh
Enrollment no.	220803004

Sr. No	Question with options		Answer	Unit No.	Marks per Question
1	Q.	How many forms are applicable for L'hospital rule ?	B		1
	A)	0			
	B)	2			
	C)	1			
	D)	4			
2	Q.	How many types of indeterminate terms ?	C		1
	A)	5			
	B)	6			
	C)	7			
	D)	8			
3	Q.	The series expansion of 'sinx/x' near origin is	C		1
	A)	1+ x3/3! +.....			
	B)	1 - x3/3! +.....			
	C)	1 - x2/6! +.....			
	D)	1 + x2/6! +.....			
4	Q.	1 + x2/2! + x4/4! + x6/6! Stands for.	B		1
	A)	Sinh x			
	B)	Cosh x			
	C)	Sin x			
	D)	Cos x			
5	Q.	The function f(x)= (4-x2)/(4x-x3) is	C		1
	A)	Discontinuous at only one point			

	B)	Discontinuous at exactly two points			
	C)	Discontinuous at exactly three points			
	D)	None of these			
6	Q.	For the limit of function to exist we must have.	A		1
	A)	LHL=RHL			
	B)	LHL=2RHL			
	C)	LHL<RHL			
	D)	LHL>RHL			
7	Q.	If f(x)=l & g(x)=m Then which is wrong.	B		1
	A)	f(x)-g(x)=l+m			
	B)	f(x)+g(x)=l+m			
	C)	f(x)×g(x)=l+m			
	D)	f(x)÷g(x)=l+m			
8	Q.	For the curve a^2/x^2 + b^2/y^2 = 1, the asymptotes parallel to y - axis are.	C		1
	A)	X= +b,-b			
	B)	Y= +a,-a			
	C)	X=+a,-a			
	D)	X=a+b			
9	Q.	Which is the nth derivative symbol?	D		1
	A)	Y^n(x)			
	B)	e^n(x)			
	C)	d^ny/dx^n			
	D)	All			
10	Q.	d/dx (sinx/x) =___	B		1
	A)	0			
	B)	1			
	C)	3			
	D)	2			

Edit with WPS Office

ATMIYA UNIVERSITY

Faculty of Engineering and Technology
School of Engineering
M.TECH SEM
QUESTION BANK Of IAC

Unit 1: Industrial Automation & Its Hardware Components

1. Define industrial automation and explain its significance in process control.

2. Describe the structure and function of an industrial control system.

3. Explain the role of actuators in industrial automation. Give examples of electric motors and pneumatic actuators.

4. How does a relay function? Compare solid-state relays with traditional electromechanical relays.

5. What are solenoid linear actuators, and how are they applied in automation systems?

6. Discuss the different types of switches (e.g., proximity, photoelectric, and limit switches) used in industrial systems.

7. Explain the working and applications of timers and counters in automation circuits.

8. What is the difference between three-phase monitoring relays and reed relays?

9. Describe the purpose of thermal overload relays in protecting industrial equipment.

10. How are Micro-Electro-Mechanical Systems (MEMS) applied in industrial automation?

Unit 2: Programmable Logic Controllers (PLCs): An Overview

1. What is a Programmable Logic Controller (PLC)? How does it contribute to industrial automation?

2. Describe the main hardware components of a PLC and their functions.

3. How does the I/O section of a PLC work? Explain the difference between discrete and analog I/O modules.

4. Discuss the role of the Central Processing Unit (CPU) in a PLC.

5. What are the advantages of using PLCs over traditional relay-based control systems?

6. Explain the various types of memory used in PLCs. Why is memory critical for PLC operations?

7. What is a Human Machine Interface (HMI)? Describe its role in industrial automation systems.

8. Discuss the application areas where PLCs are widely used.

9. How does the size of a PLC affect its application? Provide examples of different PLC sizes.

10. Explain how PLC programming devices are used to modify operations in real-time.

Atmiya University Rajkot

ATMIYA UNIVERSITY

Faculty of Engineering and Technology
School of Engineering
M.TECH SEM
QUESTION BANK Of IAC

Unit 3: Fundamentals of PLC Logic Programming

1. Explain the basic principles of PLC ladder-logic diagrams.

2. What are PLC Boolean instructions, and how are they used in programming? Provide examples.

3. Describe the function of a Set-Reset Flip-Flop instruction in PLCs. How is it implemented in ladder logic?

4. What is the difference between shift and rotate instructions in PLC programming?

5. How do combinational logic instructions differ from sequential logic instructions? Provide examples of both.

6. Explain the use of program-control instructions in a PLC.

7. What are positive-edge and negative-edge instructions in PLC logic?

8. How are PLCs used to implement sequential logic in industrial automation?

9. Discuss the application of combinational logic instructions in solving practical automation problems.

10. What are logical instructions in PLC programming, and how are they used to control outputs?

Unit 4: Timers and Counters Programming

1. Explain the fundamental working of ON-DELAY and OFF-DELAY timers in PLCs.

2. What are Retentive Timers (TONRs), and how do they differ from standard timers?

3. Describe the working of Count Up (CTU), Count Down (CTD), and Count Up-Down (CTUD) counters.

4. What are one-shot operations, and where are they used in PLC programming?

5. Discuss the practical applications of timers in industrial control processes.

6. How are special timing instructions used to solve complex automation problems?

7. Explain how pulse generation and pulse timers (TP) are implemented in PLC programming.

8. What is the significance of using counters in automation systems? Give examples.

9. Describe how PLCs are used for time-accumulation processes in automation.

10. Provide an example of how a counter is used to automate an industrial process.

Atmiya University Rajkot

ATMIYA UNIVERSITY

Faculty of Engineering and Technology
School of Engineering
M.TECH SEM
QUESTION BANK Of IAC

Unit 5: Math, Move, and Comparison Instructions

1. Explain the function of math instructions in PLC programming. Provide examples of commonly used math instructions.

2. How are different numbering systems represented in PLCs? Discuss their significance.

3. Describe how data and numbers are represented in PLC memory.

4. What are comparison instructions in PLCs, and how are they used in decision-making processes?

5. Explain the application of math instructions in process control tasks.

6. How do relational instructions work in PLC programming? Provide practical examples.

7. Discuss how common process-control tasks are solved using math and comparison instructions.

8. Describe an industrial automation scenario where math and comparison instructions are critical for control.

9. How is data moved between different PLC registers? Discuss the importance of data movement.

10. What are industrial process-control applications that rely on math and comparison instructions?

Atmiya University Rajkot

ATMIYA UNIVERSITY

Faculty of Engineering and Technology
School of Engineering
M.TECH SEM
QUESTION BANK Of SSDD

Unit I: Introduction to DC Motor Drives

1. Explain the different types of DC motors and their speed-torque characteristics.
2. Derive the torque equation for a DC motor and explain its significance in drive systems.
3. Discuss the methods of speed control for both armature-controlled and field-controlled DC motors.
4. What is the difference between constant torque and constant horsepower operation in DC drives?
5. Explain multi-quadrant operation in DC motor drives with examples.
6. What are the key components of a DC drive system? Describe their roles.
7. How does induced EMF affect the operation of DC motors in industrial applications?

Unit II: Converter Control

1. Explain the principle of phase control in converter-fed DC drives.
2. Analyze the performance of a series and separately excited DC motor when operated with a single-phase converter.
3. Discuss the differences in continuous and discontinuous armature current operations in DC drives.
4. How are braking schemes implemented in converter-fed DC drives?
5. Describe the working of a dual converter in controlling the speed of DC motors.
6. What are the advantages and disadvantages of using three-phase converters over single-phase converters in DC drives?
7. Explain the impact of converter operation on the overall efficiency of a DC drive system.

Unit III: Chopper Control

1. What is time-ratio control, and how is it applied in chopper-controlled DC motors?
2. Discuss the working principles of Class A and Class B choppers in DC motor control.
3. Explain multi-quadrant control in chopper-fed DC drives.
4. How do Class C, D, and E choppers differ from Class A and B choppers in DC drives?
5. Describe the implementation of braking schemes in chopper-controlled DC motors.
6. What are the advantages of multi-phase choppers in industrial applications?
7. Explain how frequency modulation is used in chopper control of DC motors.

ATMIYA UNIVERSITY

Faculty of Engineering and Technology
School of Engineering
M.TECH SEM
QUESTION BANK Of SSDD

Unit IV: Closed Loop Control

1. Derive the transfer function of a separately excited DC motor.
2. Explain the linear transfer function model of power converters in DC drive systems.
3. Discuss the role of current and speed loops in closed-loop control of DC motors.
4. Compare the response of P, PI, and PID controllers in DC drive applications.
5. How is speed control achieved using closed-loop control in DC drives?
6. What are the advantages of using PID controllers over PI controllers in DC drive systems?
7. Explain the concept of feedback in closed-loop control and its importance in speed regulation.

Unit V: Digital Control

1. How is Phase Locked Loop (PLL) used in the control of DC drives?
2. Explain the role of microcomputers in the digital control of DC drives.
3. What is the function of a program flow chart in the constant horsepower operation of DC drives?
4. Discuss the method of speed detection in digitally controlled DC drives.
5. How is gate firing controlled in micro-computer controlled DC drives?
6. Explain the impact of digital control systems on the accuracy and efficiency of DC drives.
7. What are the advantages of using digital control in DC drives compared to analog control systems?

Atmiya University Rajkot

ATMIYA UNIVERSITY, Rajkot
Faculty of Science
Department of Mathematics

Question Bank
Academic Year: 2023-24

Program: **B.Sc. Physics**	Semester: III
Course Code: **21UFSDE307**	Course: Advanced Mathematics

Part A

1. Give an example of lower triangular matrix.
2. Write condition of existence of unique solution in system of homogenous equations.
3. What do you mean by characteristic equation of a matrix A?
4. Convert cartesian co-ordinate $(1,\sqrt{3})$ to polar coordinate (r,θ).
5. What is irrotational vector?
6. Define scalar matrix.
7. Find trace of the given matrix.

$$\begin{bmatrix} 1 & 0 \\ 5 & -5 \end{bmatrix}$$

8. Define system of homogenous linear equations.
9. Give an example of system of non-homogenous linear equations.
10. Define column matrix.
11. Define row matrix.
12. Give an example of homogenous linear system of equations.
13. Describe characteristic matrix of A.
14. Convert cartesian co-ordinate $(\sqrt{3},1)$ into polar co-ordinate (r,θ).
15. What is solenoidal function?

Part B

16. Give an example for each of the following matrices:
    (i) Skew symmetric matrix.
    (ii) Hermitian Matrix.
17. Check whether the given matrix is orthogonal or not.

Atmiya University Rajkot

$$\begin{bmatrix} 0 & \frac{1}{\sqrt{2}} & \frac{1}{\sqrt{2}} \\ \sqrt{\frac{2}{3}} & \frac{1}{\sqrt{6}} & \frac{1}{\sqrt{6}} \\ \frac{1}{\sqrt{3}} & \frac{1}{\sqrt{3}} & \frac{1}{\sqrt{6}} \end{bmatrix}$$

18. Solve the system of equations by Cramer's rule.

$$\begin{aligned} 2x + y + 3z &= 0 \\ x + 2y &= 0 \\ y + z &= 0 \end{aligned}$$

19. Write the conditions on consistency of system of linear equations for both homogeneous and non-homogeneous systems.
20. What are the features of row echelon form of a matrix.
21. Check the following system is consistent or not. If it is consistent then find its solution.

$$\begin{aligned} 2x + y + 5z &= 4 \\ 3x - 2y + 2z &= 2 \\ 5x - 8y - 4z &= 1 \end{aligned}$$

22. Find the rank of the following matrix by row echelon form

$$A = \begin{bmatrix} 3 & -1 & -1 \\ 1 & 1 & 2 \\ 5 & 1 & 3 \end{bmatrix}$$

23. Show that every matrix can be uniquely expressed as $P + iQ$, where P and Q are Hermitian matrices.
24. Solve the following system of equations by Gaussian elimination method

$$\begin{aligned} 2x - 3y - z &= 3 \\ x + 2y - z &= 4 \\ 5x - 4y - 3z &= -2. \end{aligned}$$

25. Write the conditions on consistency for homogeneous and non-homogenous system of linear equations.
26. Find eigen value of the given matrix $\begin{bmatrix} 4 & 0 & 1 \\ -2 & 1 & 0 \\ -2 & 0 & 1 \end{bmatrix}$.
27. Find eigen vectors, if 3,6,9 are the eigen values of the given matrix $\begin{bmatrix} 7 & 0 & -2 \\ 0 & 5 & -2 \\ -2 & -2 & \end{bmatrix}$
28. Derive polar equation of straight line and polar equation of line parallel to $ax + by + c = 0$.
29. Find the cylindrical co-ordinates for the point $(\sqrt{2}, -\sqrt{2}, 2\sqrt{3})$.

Atmiya University Rajkot

30. Solve $div(grad\, f)$ and $curl(grad\, f)$, where f is a scalar function.

31. Prove that $\nabla \times (\vec{a} \times \vec{r}) = 2\vec{a}$, where $\vec{a}$ is a constant vector.

32. Verify the given matrix is unitary or not.

$$\frac{1}{2}\begin{bmatrix} 1+i & 1-i \\ 1-i & 1+i \end{bmatrix}$$

33. Find row echelon form of the given matrix.

$$\begin{bmatrix} 1 & 2 & -3 & 1 \\ -1 & 0 & 3 & 4 \\ 0 & 1 & 2 & -1 \\ 2 & 3 & 0 & -3 \end{bmatrix}$$

34. Find eigen values of the given matrix.

$$\begin{bmatrix} 1 & 2 & 3 \\ 0 & -4 & 2 \\ 0 & 0 & 7 \end{bmatrix}$$

35. If $A = \begin{bmatrix} 3 & -1 & 1 \\ -1 & 5 & -1 \\ 1 & -1 & 3 \end{bmatrix}$, then find eigen values for the following matrices

(i) A

(ii) A^T.

36. (i) Transform the equation $x^2 - y^2 = a^2$ into polar form.

(ii) Find centre and radius of given circle

$$r^2 - 8r\cos\left(\theta - \frac{\pi}{6}\right) + 12 = 0.$$

37. Derive equation for finding the distance between two points in polar co-ordinates.

38. Find unit vector normal to the surface $xy^3z^2 = 4$ at the point $(-1, -1, 2)$.

39. If $\vec{A} = \nabla(xy + yz + zx)$, find $\nabla.\vec{A}$ and $\nabla \times \vec{A}$.

40. Find unit vector normal to the surface $x^2y + 2xz^2 = 8$ at the point $(1,0,2)$.

41. (i) Transform the equation $\sqrt{3}x + y = 2$ into polar form.

(ii) Find centre and radius of given circle

$$r^2 - 4r\cos\left(\theta + \frac{5\pi}{6}\right) - 5 = 0.$$

42. Find eigen vectors, if $-1,0,2$ are the eigen values of the given matrix.

$$\begin{bmatrix} 9 & -1 & 9 \\ 3 & -1 & 3 \\ -7 & 1 & -7 \end{bmatrix}$$

43. Find eigen values of the given matrix.

$$\begin{bmatrix} 1 & 0 & -1 \\ 1 & 2 & 1 \\ 2 & 2 & 3 \end{bmatrix}$$

44. Verify the given matrix is orthogonal or not.

$$\frac{1}{3}\begin{bmatrix} 1 & 2 & 2 \\ 2 & 1 & -2 \\ -2 & 2 & -1 \end{bmatrix}$$

45. Find row echelon form of the given matrix.

Atmiya University Rajkot

$$\begin{bmatrix} 1 & 2 & -3 & 1 \\ -1 & 0 & 3 & 4 \\ 0 & 1 & 2 & -1 \\ 2 & 3 & 0 & -3 \end{bmatrix}$$

Part C

46. Express the Hermitian matrix $A=\begin{bmatrix} 1 & -i & 1+i \\ i & 0 & 2-3i \\ 1-i & 2+3i & 2 \end{bmatrix}$ as $P+iQ$, where P is a real symmetric matrix and Q is a real skew symmetric matrix.

47. Show that the following matrices are orthogonal and hence find its inverse
$$\frac{1}{9}\begin{bmatrix} 8 & -4 & 1 \\ 1 & 4 & -8 \\ 4 & 7 & 4 \end{bmatrix}.$$

48. Investigate for what value of λ and μ, the equations
$$x+2y+z=8$$
$$2x+2y+2z=13$$
$$3x+4y+\lambda z=\mu$$
have (i) no solution (ii) a unique solution and (iii) many solutions.

49. Find non-trivial solution of the given system of equations by Cramer rule
$$2x_1-x_2+3x_3=0$$
$$3x_1+2x_2+x_3=0$$
$$x_1-4x_2+5x_3=0.$$

50. Verify Cayley-Hamilton theorem for matrix A, where
$$A=\begin{bmatrix} 1 & 2 & -2 \\ -1 & 3 & 0 \\ 0 & -2 & 1 \end{bmatrix}.$$

51. Find inverse of the given matrix $\begin{bmatrix} 2 & 0 & -1 \\ 0 & 2 & 0 \\ -1 & 0 & 2 \end{bmatrix}$.

52. Derive the general equation of the circle in polar form.

53. (i) Transform the polar equation $r=cos(\theta-\alpha)=p$ into cartesian form.
(ii) Translate the cartesian equation $x^2+y^2=32$ into cylindrical co-ordinate.

54. (i) Find $\nabla\phi$ at $(1,-2,1)$, if $\phi=3x^2y-y^3z^2$.
(ii) Evaluate ∇e^{r^2}, where $r^2=x^2+y^2+z^2$.

Atmiya Uni
Rajko

55. Prove that for vector function $\vec{A}$, $\nabla\times(\nabla\times\vec{A})=\nabla(\nabla.\vec{A})-\nabla^2\vec{A}$.

56. Find rank of the matrix by row reduced echelon form.

$$\begin{bmatrix}0 & -1 & 2 & 3\\ 2 & 3 & 4 & 5\\ 1 & 3 & -1 & 2\\ 3 & 2 & 4 & 1\end{bmatrix}$$

57. Express the following matrix as the sum of Hermitian matrix and a skew Hermitian matrix.

$$\begin{bmatrix}2 & 4+i & 6i\\ 6 & 5-i & 4\\ 0 & 1-i & 8i\end{bmatrix}$$

58. Solve the following system of equation by Gauss-Jordan elimination method:

$$\begin{aligned}x+2y+z&=-1\\ 6x+y+z&=-4\\ 2x-3y-z&=0\\ -x-7y-2z&=7\\ x-y&=1.\end{aligned}$$

59. For what value of λ does the following system of equations possess a non-trivial solution? Obtain the solution for real value of λ.

$$\begin{aligned}3x+y-\lambda z&=0\\ 4x-2y-3z&=0\\ 2\lambda x+4y-\lambda z&=0\end{aligned}$$

60. Express the following matrix as $P+Q$ where P is Hermitian matrix and Q is skew Hermitian matrix.

$$\begin{bmatrix}2+3i & 0 & 4i\\ 5 & i & 8\\ 1-i & -3+i & 6\end{bmatrix}$$

61. Find rank of matrix by reduced row echelon form.

$$\begin{bmatrix}1 & 1 & 2\\ 2 & 4 & -3\\ 3 & 6 & -5\end{bmatrix}$$

62. Solve the given system by Gauss-Jordan elimination method:

$$\begin{aligned}x-2y-z+3w&=1\\ 2x-4y+z&=5\\ x-2y+2z-3w&=4\end{aligned}$$

63. Find eigen vectors, if 0,3,15 are the eigen values of the given matrix.

$$\begin{bmatrix}8 & -6 & 2\\ -6 & 7 & -4\\ 2 & -4 & 3\end{bmatrix}$$

64. Verify Cayley Hamilton theorem for matrix A, where

Atmiya University Rajkot

$$A = \begin{bmatrix} 1 & 0 & 2 \\ 0 & -1 & 1 \\ 0 & 1 & 0 \end{bmatrix}$$

65. Express the following Hermitian matrix as $P + iQ$ where P is real symmetric matrix and Q is real skew symmetric matrix.

$$\begin{bmatrix} 2 & 2+i & -2i \\ 2-i & 3 & i \\ 2i & -i & 1 \end{bmatrix}$$

66. If $\vec{A} = 2x^2\,\hat{\imath} - 3yz\hat{\jmath} + xz\hat{}2\hat{k}$ and $\phi = 2z - x^3y$, find
    (i) $\vec{A}.\nabla\phi$
    (ii) $\vec{A} \times \nabla\phi$ at $(1,-1,1)$.

67. Verify Cayley Hamilton theorem for matrix A, where

$$A = \begin{bmatrix} 1 & 2 & -2 \\ -1 & 3 & 0 \\ 0 & -2 & 1 \end{bmatrix}$$

68. Find the cylindrical and spherical co-ordinates for the point $(\sqrt{2}, -\sqrt{2}, -2\sqrt{3})$.

69. Find the cylindrical and spherical co-ordinates for the point $(-\sqrt{3}, -1, -2\sqrt{3})$.

70. Determine the constants a and b such that curl of $(2xy + 3yz)\hat{\imath} + (x^2 + axz - 4z^2)\hat{\jmath} + (3xy + 2byz)\hat{k}$ is zero.

71. If $A = \begin{bmatrix} 3 & -1 & 1 \\ -1 & 5 & -1 \\ 1 & -1 & 3 \end{bmatrix}$, then find eigen values for the following matrices
    (i) A
    (ii) A^{-1}
    (iii) A^T.

72. Solve the given system by Gauss-Jordan elimination method:

$$2x - y + z = 9$$
$$3x - y + z = 6$$
$$4x - y + 2z = 7$$
$$-x + y - z = 4.$$

73. Find rank of matrix by reduced row echelon form.

$$\begin{bmatrix} 1 & 1 & 2 \\ 2 & 4 & -3 \\ 3 & 6 & -5 \end{bmatrix}$$

74. Express the following Hermitian matrix as $P + iQ$ where P is real symmetric matrix and Q is real skew symmetric matrix.

$$\begin{bmatrix} 2 & 2+i & -2i \\ 2-i & 3 & i \\ 2i & -i & 1 \end{bmatrix}$$

Atmiya University Rajkot

ATMIYA UNIVERSITY, Rajkot
Faculty of Science
Department of Mathematics

Question Bank
Academic Year: 2023-24

Program: **B.Sc. Mathematics**	Semester: III
Course Code: **21UFSDE308**	Course: Introduction to Statistical Methods

Part A

1. Define term statistics.
2. What do you mean by "interval scale"?
3. What is the difference between bar chart and histogram.
4. What is stem and leaf plot.
5. Draw dot plot of the following data:

x	1	2	3	4
f	6	2	3	5

6. Find mode of the following distribution:

x	5	6	7	8	9
f	5	8	2	6	4

7. Find range of the distribution: 5, 9, 2, 7, 12, 3.
8. Write sample space of throw of 3 coins.

Part B

9. What are the applications of statistics in real life?
10. Explain different types of frequency distribution with an example.
11. Draw the histogram of the following data:

Marks	5-9	10-14	15-24	25-34	35-44	45-59	60-84
No. of Students	8	12	20	18	15	25	10

12. Represent the following data by a frequency polygon:

Age	5-15	15-25	25-35	35-45	45-55	55-65	65-75
No. of Persons	12	15	19	64	55	38	10

13. Explain different types of data.
14. Make stem and leaf plots for the given data:
    (i) 26,37,48,33,49,26,19,26,48,67,42,58,41,54,65,65,54,69,37,48,48
    (ii) 5.8,6.4,5.8,7.5,6.9,8.4,7.6,7.6,6.4

Atmiya University Rajkot

15. Explain four main scales of measurements.

16. Plot the following data by the histogram:

Profit and losses	500-600	400-500	300-400	200-300	100-200	0-100	(-100)-0
No. of firms	9	6	12	30	15	8	6

17. Draw bar chart to represent the frequency of coloured cars that triggered a speed camera on a busy road during one month:

Car colour	Black	White	Red	Blue	Other
Frequency	12	13	5	11	9

18. Find median of the following distribution:

Class Interval	0-10	10-20	20-30	30-40	40-50
Frequency	14	23	27	21	15

19. Find mode from the following data:

Profit per shop	0-100	100-200	200-300	300-400	400-500	500-600
No. of shops	12	18	27	20	17	6

20. Calculate the standard deviation of the weights of ten persons. The data is given as: 45, 49, 55, 50, 41, 44, 60, 58, 53, 55.

21. Calculate the mean deviation about mean of the following values: 2, 4, 7, 8, 9, 11, 13, 15.

22. Define the following terms:
    (i) Independent events.
    (ii) Mutually exclusive events.
    (iii) Exhaustive events.
    (iv) Favourable events.

23. The probability that a contractor will get a plumbing contract is 2/3 and the probability that he will not get an electric contract is 5/9. If the probability of getting any one contract is 4/5. What is the probability that he will get both the contracts?

Part C

24. Tabulate the following data:
    Out of 356628 persons 247095 persons belonged to agricultural class. In the agricultural class 71049 persons were self-supporting, 31069 were earning dependents and the rest were non-earning. The number of non-earning and self-supporting persons in the non-agricultural class were 67335 and 33350, respectively. The others were earning dependents.

25. The bar graph given below shows the marks of students of a class in a particular subject:
    Study the bar graph and answer the following questions:
    (a) If 40 is the pass mark, then how many students have failed?
    (b) How many students got marks from 50 to 69?
    (c) How many students scored 90 marks and above?

Atmiya University Rajkot

(d) If students who scored marks above 80 are given merits then how many merit holders are there?

(e) What is the strength of the class?

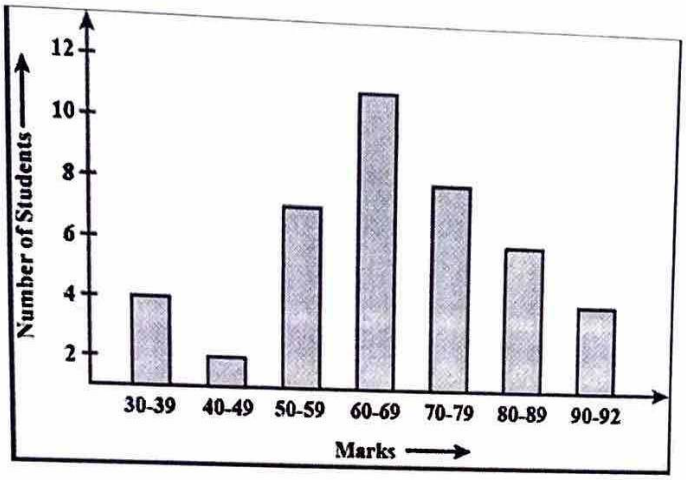

26. For the following distribution draw more than ogive curve:

Weekly wages (in Rs.)	20-40	40-60	60-80	80-100	100-120	120-140	140-160	160-180	180-200
No. of workers	8	12	20	30	40	35	18	7	5

27. Draw an ordered stem leaf diagram for the following set of data:

(i) 153, 144, 148, 140, 149, 145, 144, 142, 158, 135, 140, 139, 160.

(ii) 1.5, 2.3, 1.6, 3.1, 1.4, 2.5, 1.7, 1.8, 2.4.

28. The following table gives the distribution of the companies to size of capital. Find the mean size of the capital of the company.

Capital (in Lacs)	**No. of companies**
less than 5	20
less than 10	27
less than 15	29
less than 20	38
less than 25	48
less than 30	53

29. Find median of the following data:

Age (greater than)	0	10	20	30	40	50	60	70
No. of persons	230	218	200	165	123	73	28	8

30. Find standard deviation for the following data:

Age (in years)	10-19	20-29	30-39	40-49	50-59	60-69	70-79	80-89
No. of cases	1	0	1	10	17	38	9	3

31. The mean and standard deviation of the marks of 200 candidates were found to be 40 and 15, respectively. Then, it was discovered that a score of 40 was wrongly read as 50. Find correct standard deviation.

Atmiya University Rajkot

32. State and prove additive law of probability.

33. A box contains 4 white, 6 red, 5 black balls and 5 balls of other colour. Two balls are drawn from the box at random. Find the probability that
    (i) Both are white or both are red.
    (ii) Both are red or both are black.

34. Describe the different methods used in the measurements of qualitative data.

35. A city was divided into three areas viz. Northern, Southern and Central. There were 67,71,000 houses of which 17,61,000 were in the central area. Of the house in the Southern area 40,64,000 were occupied and 4,500 were under construction. In the Northern area 40,000 houses were unoccupied and 5,000 were under construction out of the total of 6,16,000 houses. The total houses in the city that are under construction are 62,000 and those unoccupied are 4,49,000. Present the above data in a table.

36. For the following distribution draw less than ogive curve:

Weekly wages (in Rs.)	20-40	40-60	60-80	80-100	100-120	120-140	140-160	160-180	180-200
No. of workers	8	12	20	30	40	35	18	7	5

Atmiya University
Rajkot

ATMIYA University, Rajkot
Faculty of Science
Department of Mathematics
AY: 2023-24

ACADEMIC ACTIVITIES

Question Bank: BSc Mathematics Sem– 5

Subject: Linear Transformation and its Applications (21BMTCC502)

1 Determine whether the function $T: P_2 \to P_3$ defined as $T(p(x)) = x\,p(x),\ \forall p(x) \in P_2$ is a linear transformation.

2 Determine whether the functions $T: M_{mn} \to M_{nm}$ is a linear transformation. Defined as $T(A) = A^T, \forall A \in M_{mn}$

3 Prove that: Let U & V be any vector spaces over $F = \mathbb{R}$. Then a function $T: U \to V$ is a linear transformation if and only if $T(\alpha u_1 + \beta u_2) = \alpha T(u_1) + \beta T(u_2)$, $\forall u_1, u_2 \in U$ and $\alpha, \beta \in F = \mathbb{R}$.

4 Find the linear transformation $T: \mathbb{R}^3 \to \mathbb{R}^3$ such that $T(v_1) = (2,-1,4)$, $T(v_2) = (3,0,1)$ & $T(v_3) = (-1,5,1)$. Also find $T(2,4,-1)$.
Where $S = \{v_1, v_2, v_3\}$ is basis of $\mathbb{R}^3$ and $v_1 = (1,1,1), v_2 = (1,1,0), v_3 = (1,0,0)$

5 Let $T: M_{22} \to \mathbb{R}$ be a linear transformation for which $T(v_1) = 1, T(v_2) = 2$, $T(v_3) = 3, T(v_4) = 4$. Here $\{v_1, v_2, v_3, v_4\}$ is a base set of M_{22}.
Where $v_1 = \begin{bmatrix} 1 & 0 \\ 0 & 0 \end{bmatrix}, v_2 = \begin{bmatrix} 1 & 1 \\ 0 & 0 \end{bmatrix}, v_3 = \begin{bmatrix} 1 & 1 \\ 1 & 0 \end{bmatrix}, v_4 = \begin{bmatrix} 1 & 1 \\ 1 & 1 \end{bmatrix}$.

6 Define: Rank and Nullity of linear transformation

7 A linear transformation $T: U \to V$ is one-one if and only if $N_T = \{\theta\}$

8 State and prove Rank – Nullity theorem.

9 For linear transformation $T: \mathbb{R}^4 \to \mathbb{R}^4$ defined as
$T(x_1, x_2, x_3, x_4) = (x_1 + 2x_2, x_2 - x_3, x_1 - x_4, x_4), \forall (x_1, x_2, x_3, x_4) \in \mathbb{R}^4$.
Find $R_T, N_T, r(T)$ & $n(T)$. Also verify the rank-nullity theorem

10 For linear transformation $T: W \to P_2$ defined as
$T\begin{pmatrix} a & b \\ b & c \end{pmatrix} = ((a-b) + (b-c)x + (c-a)x^2), \forall \begin{pmatrix} a & b \\ b & c \end{pmatrix} \in W$. Note that W is a vector space of all 2×2 matrices. Find $R_T, N_T, r(T)$ & $n(T)$. Also verify the rank-nullity theorem

11 Determine whether the linear transformation $T: \mathbb{R}^2 \to \mathbb{R}^3$ defined as $T(x, y) = (x - y, y - x, 2x - 2y)$ is one – one , onto or both or neither

12 Let $T: U \to V$ be a linear transformation. If T is non – singular then prove that $T^{-1}: V \to U$ is also a linear transformation

13 Prove that $T: \mathbb{R}^2 \to \mathbb{R}^2$ defined as $T(a, b) = (a\cos\theta - b\sin\theta, a\sin\theta + b\cos\theta)$, $\forall (a, b) \in \mathbb{R}^2$ is non-singular. Also Find T^{-1}.

14 Let U & V be any two vector spaces. Then prove that $L(U, V)$ is a vector space over the field $F = \mathbb{R}$ with respect to addition and scalar multiplication of linear transformation.

Atmiya University ★ Rajkot ★

15 If T_1, T_2 and T_3 are linear transfor... invertible and T_1 ... Such that $(T_1 \circ T_2) = (T_3 \circ T_1) = I$ then T_1 is invertible and ...

16 The necessary and sufficient condition for a linear transformation T on a vector space V to be invertible is that there exists a linear transformation S on V such that $T \circ S = I = S \circ T$.

17 Let $T_1: M_{22} \to \mathbb{R}$ and $T_2: M_{22} \to M_{22}$ be the linear transformation given by $T_1(A) = trace\ (A)$ and $T_2(A) = A^T$. Find $(T_1 \circ T_2)(A)$. Where $A = \begin{bmatrix} a & b \\ c & d \end{bmatrix}$

18 Let $T_1: P_1 \to P_2$ and $T_2: P_2 \to P_2$ be the linear transformation given by $T_1(p(x)) = x\,p(x)$ and $T_2(p(x)) = p(2x+4)$. Find $(T_2 \circ T_1)(a_0 + a_1 x)$

19 Let $T: P_3 \to P_2$, $T(p(x)) = p'(x), \forall p(x) \in P_3$ and let $B_1 = \{1, x, x^2, x^3\}$ and $B_2 = \{1, x, x^2\}$ be two basis of P_3 & P_2 respectively. Then find $[T; B_1, B_2]$ *or* $[T]_{B_1}^{B_2}$.

20 Let $T: \mathbb{R}^2 \to \mathbb{R}^2$, $T(x,y) = (xcos\theta + ysin\theta, -xsin\theta + ycos\theta), \forall (x,y) \in \mathbb{R}^2$ and let B_1 and B_2 be the standard basis of $\mathbb{R}^2$ domain & codomain respectively. Then find $[T; B_1, B_2]$ *or* $[T]_{B_1}^{B_2}$.

21 Find linear transformation $T: \mathbb{R}^4 \to \mathbb{R}^3$, related to the matrix $\begin{bmatrix} 1 & -1 & 2 & 1 \\ 1 & 0 & 1 & -1 \\ 0 & 2 & -1 & 1 \end{bmatrix}$ associated with standard basis B_1 & B_2 of $\mathbb{R}^4$ & $\mathbb{R}^3$ respectively.

22 $A = \begin{bmatrix} 3 & 5 \\ -1 & 7 \\ 4 & 2 \end{bmatrix}$ is the matrix associated with linear transformation $T: \mathbb{R}^2 \to \mathbb{R}^3$, with respect to standard basis B_1 & B_2 of $\mathbb{R}^2$ & $\mathbb{R}^3$ respectively. If we change the basis as $B_1' = \{(1,-2),(1,1)\}$ *and* $B_2' = \{(1,1,0),(0,1,1),(1,0,1)\}$. Then find $[T; B_1', B_2']$.

23 $A = \begin{bmatrix} 1 & -1 & 2 \\ 2 & 3 & 1 \\ 0 & 1 & 4 \end{bmatrix}$ is the matrix associated with linear transformation $T: \mathbb{R}^3 \to \mathbb{R}^3$, w.r.t standard basis B_1 & B_2 of $\mathbb{R}^3$ & $\mathbb{R}^3$ respectively. If we change the basis as $B_1' = \{(1,1,1),(1,1,0),(1,0,0))\}$ *and* $B_2' = \{(1,1,1),(1,1,0),(1,0,0))\}$. Then find $[T]_{B_1'}^{B_2'}$.

24 Prove that: The linear transformation T on V is unitary if and only if it takes an orthonormal basis of V (domain) into an orthonormal basis of V

25 If $T \in A(V)$ then given any vector $v \in V$ there exists an element $w \in V$, depending on v and T, such that $\langle T(u), v\rangle = \langle u, w\rangle$, for all $u \in V$. This element w is uniquely determined by v and T.

26 If $T \in A(V)$ is LT then $T^* \in A(V)$ is also LT moreover,

(1) $(T^*)^* = T$

(2) $(S+T)^* = S^* + T^*$

(3) $(\alpha S)^* = \bar{\alpha} S^*$

(4) $(ST)^* = T^* S^*$ for all $S, T \in A(V)$ and $\alpha \in \mathbb{F}$

27 Define: Hermitian and Skew – Hermitian linear transformation.

28 If $\{v_1, v_2, \ldots, v_n\}$ is an orthonormal basis of V. If the matrix associated with linear transformation $T \in A(V)$ w.r.t. basis is α_{ij} and the matrix associated with linear

Aligarh Muslim University Rajkot

29 Find the matrix corresponding to the following quadratic form:

1. $Q = ax^2 + (h+h)xy + by^2$
2. $Q = 2x_1^2 - 7x_3^2 + 4x_1x_2 - 6x_2x_3$
3. $Q = x_1^2 - 2x_2^2 + 4x_3^2 - 4x_4^2 - 2x_1x_2 + 3x_1x_4 + 4x_2x_3 - 5x_3x_4$
4. $Q = x_1x_2 + x_2x_3 + x_3x_1 + x_1x_4 + x_2x_4 + x_3x_4$
5. $Q = (x_1 + x_2)^2 - x_3^2$

30 Find the matrices of the following quadratic forms and verify that it can be written as matrix products $X'AX$.

$Q = x_1^2 + 2x_2^2 - 5x_3^2 - x_1x_2 + 4x_2x_3 - 3x_3x_1$

31 Find Eigen values and Eigen vectors of the following matrix associated with quadratic form Q. $A = \begin{bmatrix} 4 & 6 & 6 \\ 1 & 3 & 2 \\ -1 & -4 & -3 \end{bmatrix}$

32 Find Eigen values and Eigen vectors of the following matrix associated with quadratic form $Q.A = \begin{bmatrix} 8 & -6 & 2 \\ -6 & 7 & -4 \\ 2 & -4 & 3 \end{bmatrix}$

33 Determine the diagonal matrix D orthogonally similar to real symmetric matrix A. Also find modal matrix P. Where $A = \begin{bmatrix} 3 & -1 & 1 \\ -1 & 5 & -1 \\ 1 & -1 & 3 \end{bmatrix}$

34 Determine the diagonal matrix D orthogonally similar to real symmetric matrix A. Also find modal matrix P. Where $A = \begin{bmatrix} 8 & -6 & 2 \\ -6 & 7 & -4 \\ 2 & -4 & 3 \end{bmatrix}$

Dr. Parag Ajani

ATMIYA UNIVERSITY
(Established under the Gujarat Private University Act 11, 2018)
Yogidham Gurukul, Kalawad Road, Rajkot - 360005, Gujarat (INDIA)

Faculty of Science

Department of Mathematics

Question Bank No: AU-FoS-Mathematics-Advanced Topics in Mathematical Analysis-21BMTCL501-

Question Bank
B.Sc. Mathematics-Semester 5

1 State and prove Hausdorff principle.

2 If (X, d) is a metric space and A be any subset of X then prove the following.

(i) A° is an open set.

(ii) A° is the largest open set contained in A.

(iii) A is open if and only if $A^\circ = A$.

3 If (X, d) is a metric space and $A, B \subseteq X$ then prove that $(A \cup B)' = A' \cup B'$ and $\overline{(A \cup B)} = \bar{A} \cup \bar{B}$.

4 Prove that closure of any subset of a metric space is closed.

5 Prove that every compact subset of a metric space is closed and bounded.

6 Prove that any closed subset of a compact set is compact in metric space.

7 Prove that continuous image of connected set is connected.

8 If E_1, E_2 are connected subsets of $\mathbb{R}$ with usual metric space with $E_1 \cap E_2 \neq \phi$ then prove that $E_1 \cup E_2$ is also connected.

9 Prove that the set of all real numbers in (0,1) is not enumerable.

10 Check whether $\frac{1}{4}$ is in Cantor set or not.

11 Prove that in any metric space (X, d), ϕ and X are open.

12 Check whether the function $d: \mathbb{R} \times \mathbb{R} \to \mathbb{R}$ defined as $d(x, y) = |\sin^2 x - \sin^2 y|$ is metric or not.

13 Prove that any subset of discrete metric space is closed.

Atmiya University Rajkot

14 Let (X, d) be a metric space and $E \subseteq X$. If x is a limit point of E then there are infinitely many points of E are in every neighbourhood of x.

15 Prove that any infinite subset of discrete metric space is not compact.

16 Prove that the set of all integers is not compact in usual metric space.

17 Prove that every singleton subset of a metric space is connected.

18 If a connected subset of metric space $\mathbb{R}$ has at least two elements, then prove that it is an interval.

19 Prove that length of Cantor set is 0.

20 Write the construction of Cantor set.

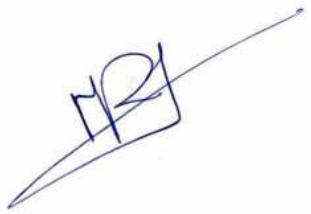

ATMIYA UNIVERSITY
(Established under the Gujarat Private University Act 11. 2018)
Yogidham Gurukul, Kalawad Road, Rajkot - 360005, Gujarat (INDIA)

Science

Mathematics

SEM-5-Course Code-21BMTCC503

Self Study Course: Applications of Mathematical Tools

Question Bank

UG-Semester V

1	Find the equation of tangent plane and normal line to the surface $x^2yz + 3y^2 = 2xz^2 - 8z$ at the point $(1, 2, -1)$.
2	A spring is stretched by $10cm$ and has 2 cm/dyne. Determine the force applied.
3	Trace the cardioids $r = a(1 - cos\theta)$.
4	Find the volume of solid generated by rotating the plane region bounded by $y = \frac{1}{x}, x = 1,$ and $x = 3$ about the x −axis.
5	Find the volume of right circular cone of base r and height h.
6	Write down applications of Hooke's law.
7	A homogeneous rod of conducting material of length 100 cm has its ends kept at zero temperature initially is $u(x,0) = \begin{cases} x, & 0 < x \leq 50 \\ 100 - x, & 50 \leq x \leq 100 \end{cases}$ Find the temperature $u(x,t)$ at any time.
8	A rod of length l with insulted side is initially at uniform temperature $100^{\circ}C$. Its end are suddenly cooled at 0^C and kept at the temperature. Find the temperature $u(x,t)$.
9	Find last digit of 7^{23}.
10	Find gcd of $(12345,\ 21517)$.
11	Trace the witch of agnesi $xy^2 = 4a^2(a - x)$.
12	If $x + y + z = u, y + z = uv, z = uvw$, prove that $\frac{\partial(x,y,z)}{\partial(u,v,w)} = u^2v$.
13	Find the volume of solid generated by revolving the curve $r = a + bcos\theta, (a > b)$ about the initial line.
14	For the cycloid $x = a(\theta + sin\theta), y = a(1 - cos\theta),$ find the volume of the solid generated by the revolution of one arch about (i) tangent at x −axis, (ii) y −axis, and (iii) the base.
15	State and Prove Hooke's law.
16	Write down the steps to find orthogonal trajectories for the Cartesian curves, and also find the orthogonal trajectories of the curve $y = x^2 + a$.
17	A string is stretched between two fixed points and the points of the string are given initial velocities $g(x)$, where $g(x) = \begin{cases} \frac{2x}{l}, & 0 < x < \frac{1}{2} \\ \frac{2}{l}(l - x), & \frac{1}{2} < x < l \end{cases}$ Where x being the distance from at the first end point. Find displacement of the string at any time.

Atmiya University ★ Rajkot

18	Solve $\frac{\partial^2 u}{\partial x^2} + \frac{\partial^2 u}{\partial y^2} = 0$ satisfied the conditions $u(0,y) = u(l,y) = u(x,0) = 0$ and $u(x,b) = sin\frac{n\pi x}{l}$.
19	State Diophantine equation and using it also find general solution of $70x + 112y = 168$.
20	State and prove Euclidean algorithm.

Mrs. Miral P. Ambavi
Dept of Mathematics,
Atmiya University

ATMIYA University, Rajkot
Faculty of Science
Department of Mathematics
AY: 2022-23

ACADEMIC ACTIVITIES

Question Bank: MSc Mathematics Sem– 3

Subject: Self – Study Course: Optimization Techniques (21MMTCC304)

1 Define: Saddle point

2 Define: Maximin principle.

3 Define: Strictly determinable.

4 Define: No passing rule.

5 Define: Differentiate Optimistic time and Pessimistic time in PERT..

6 Discuss types of failure for management of replacement and classify further.

7 We have 5 – jobs, each of which must be processed on the two machines A and B in the order A-B. Processing time in hours are given in the table below. Determine a sequence of the given 5 – jobs that will minimize the total elapsed time T. Also find idle time for both the machines.

Job	**1**	**2**	**3**	**4**	**5**
Machine A	5	1	9	3	10
Machine B	2	6	7	8	4

8 Given the following pay-off matrix of a zero-sum game, determine the optimal strategies for the players and the value of a game. Is the saddle point unique? Is the game strictly determinable?

Player A	Player B					
	B_1	B_2	B_3	B_4	B_5	B_6
A_1	18	8	18	8	18	8
A_2	15	6	15	6	15	6
A_3	18	8	18	8	18	8
A_4	-15	-6	-15	-6	-15	-6

9 The cost of a machine is Rs. 6100 and its scrap value is Rs. 100. The maintenance costs found from experience are as follows. When should the machine be replaced?

Year	1	2	3	4	5	6	7	8
Maintenance cost Rs.)	100	250	400	600	900	1200	1600	2000

10 An architect has been awarded a contract to prepare plans for an urban renewal project. The job consists of the following activities and their estimated times. Draw the network diagram of activities for the project.

Activity	Description	Predecessors Activity
A	Prepare preliminary sketches	-
B	Outline specifications	-
C	Prepare drawings	A
D	Write specifications	A, B
E	Run off prints	C, D
F	Have specifications	B, D
G	Assemble bid packages	E, F

11 An established company has decided to add a new product to its line. It will buy the product from a manufacturing concern, package it and sell it to a number of distributors that have been selected on a geographical basis. The steps shown in the following table are to be planned.

1. Draw the arrow diagram for this project.
2. Find the critical path and total project completion time.
3. For each non-critical activity, find the total and free float.

Activity	**Description**	**Predecessors**	**Duration (days)**
A	Organize sales office	-	6
B	Hire salesmen	A	4
C	Train salesmen	B	7
D	Select advertising agency	A	2
E	Plan advertising campaign	D	4
F	Conduct advertising campaign	E	10
G	Design Package	-	2
H	Setup packaging facilities	G	10
I	Package initial stocks	J, H	6
J	Order stock from manufacturer	-	13
K	Select distributors	A	9
L	Sell to distributors	C, K	3
M	Ship stocks to distributors	I, L	5

Dr. Parag Ajani

Atmiya U
Rajk

ATMIYA UNIVERSITY, Rajkot
Faculty of Science
Department of Mathematics

Question Bank
Academic Year: 2023-24

Program: **B.Sc. Mathematics**	Semester: **V**
Course Code: **21BMTCC501**	Course: **Group Theory**

Part A

1. Define finite group.
2. Give an example of group with subtraction as a binary operation.
3. What is the order of S_n group?
4. Is $(\mathbb{N}, +)$ a group or not?
5. Find index of $H = \{5n : n \in \mathbb{Z}\}$ in $G = (\mathbb{Z}, +)$.
6. Define cyclic group.
7. How many homomorphism exists from $\mathbb{Z}_6$ to $\mathbb{Z}_9$.
8. Define trivial homomorphism.
9. State second theorem of isomorphism.
10. Write a group which is isomorphic to Kelin's group (K_4).
11. Define abelian group.
12. Write Socks-Shoes property.
13. Find identity of group $U(10)$.
14. Define cyclic permutation
15. State Lagrange's theorem.

Part B

16. Write elements of D_4 and draw its composition table.
17. Let $G = \{\begin{bmatrix} a & a \\ a & a \end{bmatrix} : a \epsilon \mathbb{R}, a \neq 0\}$. Show that G is a group under matrix multiplication.
18. Write elements of symmetric group S_4 and distinguish odd and even permutations.
19. Show that center of group G is subgroup of G.
20. Show that set of all n, n^{th} roots of unity form a finite abelian group of order 'n' with respect to multiplication.

Atmiya University Rajkot

21. Let G be a group and $a \in G$ is of order n. Then for any integer k, prove that $o(a^k) = \frac{n}{(n,k)}$, where (n,k) denotes the g.c.d. of n and k.
22. State and prove Lagrange's theorem.
23. How many 3 cycles are there in S_3, S_4, S_5 and S_6.
24. Check whether $(\mathbb{Z}_8, +)$ is cyclic group or not. If it is cyclic then find its generator and order of each element.
25. Show that intersection of two normal subgroup is again a normal subgroup.
26. If $f: G \to G'$ is a homomorphism, then $Ker\, f = \{e\} \Leftrightarrow f$ is one-one.
27. If $f: G \to G'$ is a homomorphism, then
    (i) $f(e) = e'$
    (ii) $f(x^{-1}) = (f(x))^{-1}, x \in G$.
28. Prove that any two infinite cyclic groups are isomorphic.
29. Show that the mapping $f: (\mathbb{C}, +) \to (\mathbb{C}, +)$ defined by $f(z) = \bar{z}$, for $z \in \mathbb{C}$ is an automorphism, where $(\mathbb{C}, +)$ denotes the group of complex numbers under addition.

Part C

30. Prove that in a group G
    (i) $o(a) = o(a^{-1}) \forall a \in G$.
    (ii) $o(a) = o(x^{-1}ax) \forall a, x \in G$.
    (iii) $o(ab) = o(ba) \forall a, b \in G$.
31. Show that the set Q^+ of all positive rational numbers forms an abelian group under the binary operation * defined by $a * b = \frac{ab}{4}$.
32. Decompose the following permutations into disjoint cycles, then find their inverse and represent the inverse again in two-rowed representation.
    (i) $f = \begin{pmatrix} 123456 \\ 231654 \end{pmatrix}$
    (ii) $g = \begin{pmatrix} 12345 \\ 23154 \end{pmatrix}$
    (iii) $h = \begin{pmatrix} 12345678 \\ 34126785 \end{pmatrix}$
33. The order of every element of a finite group is a divisor of the order of group.
34. State and prove fundamental theorem of cyclic group.
35. Let G be the additive group of integers. Let $H = \{4n : n \in \mathbb{Z}\}$ be a subgroup of G. Find the quotient group G/H and prove that it is an abelian group.
36. State and prove fundamental theorem of Homomorphism.

Atmiya University Rajkot

37. Construct all homomorphisms from K_4 to $\mathbb{Z}_4$.

38. State and prove Cayley's theorem.

39. If H and K are two normal subgroups of a group G such that $H \subseteq K$, then show that $G/K \cong \frac{G/H}{K/H}$.

40. The order of every element of a finite group is finite and cannot exceed the order of the group.

41. Prove that the set $G = \{1,2,3,4,5,6\}$ is a finite abelian group of order 6 with respect to multiplication modulo 7.

42. The order of every element of a finite group is a divisor of the order of group.

43. If $\mathbb{Q}^+$ is the multiplicative group of positive rational numbers then show that the set $H = \{2^n : n \in \mathbb{N}\}$ is a subgroup of $\mathbb{Q}^+$.

44. Obtain all subgroups of each of the following groups:
    (i) $(\mathbb{Z}_{18}, +_{18})$
    (ii) $(\mathbb{Z}_8, +_8)$
    (iii) $G = < a >$ cyclic group of order 48.

45. Obtain generators of each of the groups
    (i) $(\mathbb{Z}_{24}, +_{24})$
    (ii) $(\mathbb{Z}_8, +_8)$
    (iii) $G = < a >$ cyclic group of order 12

46. Obtain number of elements in the following cyclic subgroups:
    (i) The cyclic subgroup generated by <25> in group $(\mathbb{Z}_{30}, +_{30})$.
    (ii) The cyclic subgroup generated by a^7 in cyclic group $G = < a >$ of order 42.
    (iii) The cyclic subgroup generated by 2 in $(\mathbb{Z}, +)$.

47. Construct all homomorphisms in the following groups. How many of them are one-one and how many are onto:
    (i) from $\mathbb{Z}_4$ to $\mathbb{Z}_6$
    (ii) from $\mathbb{Z}_6$ to $\mathbb{Z}_9$
    (iii) from $\mathbb{Z}_8$ to $\mathbb{Z}_{12}$

48. Construct all homomorphisms in the following groups. How many of them are one-one and how many are onto:
    (i) from K_4 to $\mathbb{Z}_2$
    (ii) from K_4 to $\mathbb{Z}_3$
    (iii) from K_4 to $\mathbb{Z}_4$
    (iv) from K_4 to S_3

Atmiya University Rajkot

(v) from K_4 to S_3

(vi) from K_4 to S_4

ATMIYA University, Rajkot
Faculty of Science
Department of Mathematics
AY: 2023-24

ACADEMIC ACTIVITIES

Question Bank: BSc Mathematics Sem– 3

Subject: Basics of Numerical Analysis (21BMTCC302)

1 Define: Arithmetic progression with example

2 Define: Approximating curve

3 Describe the steps to fit a linear curve $y = ax + b$ by graphical method.

4 In which method, given system of linear equations must be diagonally dominant?

5 Evaluate $\Delta^3 e^x$, where $h = 1$

6 Define: Interpolation

7 To solve the given system of linear equation, we transform the system into _____ matrix.

8 Evaluate $(1 + \Delta)(1 - \nabla)$.

9 Evaluate $\Delta^6 x^{(6)}$.

10 Diminish the roots of equation $x^4 - 8x^3 + 19x^2 - 12x + 2 = 0$ by 2.

11 Fit the curve $y = ax^b$ to the following data by graphical method.

x	1	2	3	4	5
y	0.5	2	4.5	8	12.5

12 If α is a root of equation $x^3 - 3x^2 + 4x - 8 = 0$ then find an equation whose root is 3α

13 Solve the following system of linear equations by Gauss Jordan method.

$10x + y + z = 12, 2x + 10y + z = 13, x + y + 5z = 7$

14 Define Factorial polynomial and prove that $\Delta^r x^{(r)} = r!\, h^r$.

15 Determine y at $x = 300$ using Newton's backward interpolation formula.

x	50	100	150	200	250
y	618	724	805	906	1032

Atmiya University Rajkot

16 The values of x & y obtained by experiment are as follows. Find a law of the type $y = ae^{bx}$ by graphical method.

x	2.3	3.1	4	4.92	5.91	7.20
y	33	39.1	50.3	67.2	85.6	125

17 Solve the equation $3x^3 - 4x^2 + x + 88 = 0$. Note that $2 - i\sqrt{7}$ is one of the root.

18 Solve the following system of linear equation by Gauss-Seidel method.

$8x + y + z = 5, x + 8y + z = 5, x + y + 8z = 5$

19 In the following table, one value of y is incorrect and y is a cubic polynomial of x. Construct a difference table for y and use it to locate wrong entry. Also correct the wrong value.

x	0	1	2	3	4	4	6	7
y	25	21	18	18	27	45	76	123

20 Derive Gregory – Newton backward interpolation formula.

ATMIYA UNIVERSITY
(Established under the Gujarat Private University Act 11. 2018)

Yogidham Gurukul, Kalawad Road, Rajkot - 360005, Gujarat (INDIA)

Science
Mathematics

Assignment No: AU-FoS-DepSLECode-Sem3-Course Code-21BMTCC303 Date: 25/9/2023

Discrete Mathematics
Question Bank
UG-Semester III-Student

1	If R is an equivalence relation on Xthen prove that (i) $\cup [x] = X, \forall x \in X$ (ii) $xRy \Leftrightarrow [x] = [y]$.
2	Show that the similarity of matrices on the set of all $m \times n$ matrices is an equivalence relation.
3	Let $\mathbb{N}$ be the set of all natural numbers and relation D on $\mathbb{N}$ define by for $x, y \in \mathbb{N}, xDy$ then prove that $(\mathbb{N}, D)$ is a poset.
4	If $(L, \leq)$ is a lattice and $*$ & $\oplus$ are meet and join in L then prove that $\forall a, b, c \in L$, $a * (b * c) = (a * b) * canda \oplus (b \oplus c) = (a \oplus b) \oplus c$.
5	Prove that direct product of two lattices is a lattice.
6	Let $(L,*,\oplus,',0,1)$ be a complemented lattice and $\forall x, y \in L$ prove that $x \leq y \Leftrightarrow x * y' = 0 \Leftrightarrow y' \leq x' \Leftrightarrow x' \oplus y = 1$.
7	Prove that every chain is distributive lattice.
8	Let $(L,*,\oplus)$ be a lattice then for $\forall a, b, c \in L$ then prove that $a * (b \oplus c) = (a * b) \oplus (a * c) \Leftrightarrow a \oplus (b * c) = (a \oplus b) * (a \oplus c)$.
9	State and prove distributive inequalities for a lattice.
10	Let A = Z, the set of integers, and let R be defined by aRb if and only if $a \leq b$.Is R an equivalence relation?
11	Let $\mathbb{z}$ be the set of all integers and R be the relation on $\mathbb{z}$ define by for $a, b \in \mathbb{z}, aRb$if $b = a^r$,for some positive integer r then prove that $(\mathbb{z}, R)$ is a poset.
12	(i) Define Hasse Diagram of poset. (ii) Find cover of an element of poset(S_{36}, D) and also draw its Venn diagram.
13	Prove that 0 and 1 are complement of each other.
14	If a and b are distinct atoms of Boolean algebra $(B,*,\oplus,',0,1)$ then prove that $a * b = 0$.
15	Write all the minterms of four variables a, b, c & d.
16	Obtain the minimal sum of product canonical form for the Boolean expression $\alpha(x, y, z) = xyz + xyz' + xy'z + x'yz + x'y'z$ by Karnaugh map.

Atmiya University Rajkot

17	Let (L,≤) be a lattice in which $*$ & $\oplus$ are meet and join in L then prove that $a \leq b \Leftrightarrow a * b = a$ and $a \oplus b = b$.
18	Let $(L,*,\oplus)$be a lattice then prove that for any two elements, $b \in L$, the glb & lub of $\{a,b\}$are$a * b$&$a \oplus b$ respectively with respect to partial ordering P.
19	Let $(L,*,\oplus)$ be a distributive lattice then for $\forall a,b,c \in L, a * b = a * c, a \oplus b = a \oplus c$ then prove that $b = c$. Also prove the each element has a unique complement.
20	Let $(L,*,\oplus)$ be a lattice then for $\forall a,b,c \in L$, $a * (b \oplus c) = (a * b) \oplus (a * c) \Leftrightarrow a \oplus (b * c) = (a \oplus b) * (a \oplus c)$.
21	Let $(B,*,\oplus,',0,1)$ be a Boolean algebra then prove that (i) $A(0) = \emptyset$, (ii) $A(1) = A$ = the set of all atoms of B. (iii) $x_1 \leq x_2 \Rightarrow A(x_1) \subset A(x_2), \forall x_1, x_2 \in B$ (iv) $A(x_1 * x_2) = A(x_1) \cap A(x_2), \forall x_1, x_2 \in B$ (v) $A(x_1 \oplus x_2) = A(x_1) \cup A(x_2), \forall x_1, x_2 \in B$
22	Obtain the sum of product canonical form of expressions $x_1'x_2x_3' + x_1x_4'$ in 4 variables x_1, x_2, x_3, x_4.
23	(i) Define sum of product canonical form of Boolean expression. (ii) Prove that$\sum_{i=0}^{2^n-1} m_i = 1$.
24	Show that similarity of two matrices on the set of all $m \times n$ matrices is an equivalence relation.
25	(iii) Define Hasse Diagram of poset. (iv) Find cover of an element of poset(S_{30}, D). (v) Draw the Venn diagram of poset(S_{30}, D).
26	If $(L,\leq)$ is a lattice and $*$ and $\oplus$ are meet and join in L then prove that (i) $a * b = b * a$ & $a \oplus b = b \oplus a$. (ii) $a * (b * c) = (a * b) * c$
27	(i) Define Complemented lattice. (ii) Show that $(P(A),\cap,\cup,\emptyset,A)$ is a complemented lattice.
28	A non-zero element a of Boolean algebra $(B,*,\oplus,',0,1)$ is atom if and only if $\forall x \in B$ Either$a * x = 0$ or $a * x = a$..
29	(i) If m_i&m_j are distinct minterms in n-variable $x_1, x_{2,\ldots,} x_n$ then prove that $m_i * m_j = 0$ (ii) Prove that sum of all minterms in n – variables is 1.
30	Obtain the sum of product canonical form of expressions $a' + b + ac'$ in 3 variables a, b & c.
31	Let Nbe set of all positive integers and relation D on N define by $a, b \in N$, aDb if a divides b. Prove that $\langle N, D \rangle$ is a poset.
32	Let x = {1, 2, 3, … 7} and R = {(x, y) / x – y is divisible by 3}. Show that R is an equivalence relation.

33	Let X be a non-empty set. Show that $\langle P(X), \cap, \cup \rangle$ is a lattice.
34	Define modular lattice. Show that $\langle L, \leq \rangle$ is a modular lattices if and only if $(a * b) \oplus (a * c) = a * [b \oplus (a * c)], a, b, c \in L$.
35	Define complemented lattice. Find complement of each element of lattice $\langle S_{30}, GCD, LCM, 1, 30 \rangle$.
36	Obtain the minimal sum of product canonical form for the Boolean expression $\alpha(x, y, z) = xyz + xyz' + xy'z + x'yz + x'y'z$ by Karnaugh map.
37	(i) Draw Hasse diagram for the $\langle S_{12}, D \rangle$ poset, where aDb if a divides b. (ii) Show that $\langle R, \leq \rangle$ is a lattices, where $\leq$ is less than or equal.
38	Let $\langle L, \leq \rangle$ be a lattice, for $a, b, c \in L$. Prove that (i) $a * (a \oplus b) = a$ (ii) $a * (b \oplus c) \leq (a \oplus b) * (a \oplus c)$
39	Show that $\langle S_{30}, *, \oplus \rangle$ and $\langle P(A), \cap, \cup \rangle$ are isomorphic lattices where $A = \{a, b, c\}$.
40	Obtain the sum of product canonical form of expressions $x' + y + xz'$ in 3 variables x, y & z.
41	State and prove isotonicity for a lattice.
42	Show that (S_{30}, D) is a poset.
43	Define meet and join. Prove that meet and join are idempotent binary operation.
44	Obtain the cube array representation of Boolean function $f(x, y, z) = x(y + z')$ and represented it's graphically.
45	If $(L, *, \oplus, ', 0, 1)$ is a distributive lattice then prove that $\forall a \in L$ has a unique complement.
46	Obtain the sum of product canonical form of expressions $x_1 + x_2 + x_3 + x_4$ in 4 variables x_1, x_2, x_3, x_4.
47	State and prove Stone's Representation Theorem.
48	State and prove modular inequality for a lattice.
49	Define Boolean algebra and write it's all properties.
50	(i) Define atom's in Boolean algebra. (ii) A non-zero element a of Boolean algebra $(B, *, \oplus, ', 0, 1)$ is atom if and only if $\forall x \in B$ either $a * x = 0$ or $a * x = a$.
51	(i) Define karnaugh map (ii) Define Adjacent minterms
52	State and prove unique representation theorem.
53	Define Boolean function. Obtain the cube array representation of Boolean function $f(x, y, z) = x(y + z')$ and represented its graphically.
54	If $(L, \leq)$ is a lattice and $*$ & $\oplus$ are meet and join in L then prove that (i) $a * (b * c) = (a * b) * c$ (ii) $a \oplus (b \oplus c) = (a \oplus b) \oplus c$

Atmiya University Rajkot

	(iii) $a * b = b * a \& a \oplus b = b \oplus a.$
55	State and prove De' Morgan's Law for Boolean algebra. Also prove that $(a')' = a.$
56	Define direct product of two lattices .Prove that direct product of two lattices is a lattice.
57	If $(L,*,\oplus,',0,1)$ is a distributive lattice then prove that $\forall\, a \in L$ has a unique complement.

Mrs. Nisha K. Nesadia
Dept of Mathematics,
Atmiya University

Atmiya University
Rajkot

ATMIYA UNIVERSITY
(Established under the Gujarat Private University Act 11, 2018)
Yogidham Gurukul, Kalawad Road, Rajkot - 360005, Gujarat (INDIA)

Science
Mathematics

Assignment No: AU-FoS-DepSLECode-Sem3-Course Code-21BMTCC301

Core 6:
Fundamentals of Mathematical Analysis
Question Bank
UG-Semester III-Students

1. If S_n and T_n are convergent then show that $S_n + T_n$ is convergent. Is the converse true? Justify your answer with example.
2. Discuss the boundedness of the following sequences:
   (1) $\{S_n\} = \{6\}$
   (2) $\{S_n\} = \{(-1)^n 4\}$
   (3) $\{S_n\} = \left\{\frac{2n+3}{3n+4}\right\}$
   (4) $\{S_n\} = \left\{1 + \frac{1}{n}\right\}^n$
   (5) $\{S_n\} = \{n^3\}$
3. Test the convergence of the series $1 + \frac{1+a}{1+b} + \frac{(1+a)(2+a)}{(1+b)(2+b)} + \frac{(1+a)(2+a)(3+a)}{(1+b)(2+b)(3+b)} + \cdots$
4. Verify $\lim_{n\to\infty} \frac{3n-5}{4-2n} = -\frac{3}{2}$
5. Define Leibniz's test for the convergence of an alternating series.
6. State and Prove Cauchy's General Principle of convergence of sequence.
7. Give an example of a sequence which is (i) convergent, (ii) bounded, (iii) convergent and bounded, (iv) bounded and not convergent, (v) divergent.
8. Find $\underline{lim}$ and $\overline{lim}$ of $\sqrt[n]{n}$.
9. Show that S_n is convergent, where $S_{n+1} = 3 - \frac{2}{S_n}$ and $S_1 = 4$. Find its limit point.
10. Discuss the convergence and boundedness of the following
    (1) $\{S_n\} = \left\{\frac{n^2+3n+5}{2n^2+5n+1}\right\}$
    (2) $\{S_n\} = \{\sqrt{n}\}$
11. Give an example for each of the following if $\{S_n\}$ diverges to ∞ and $\{T_n\}$ diverges to ∞ then $\{S_n + T_n\}$ may (i) convergent, (ii) diverges to ∞.
12. Test the convergence of $\sum_{n=0}^{\infty} \frac{3^{2n}}{2^{3n}}$.
13. Test the convergence of the series $\frac{x}{1\cdot 3} + \frac{x^2}{3\cdot 5} + \frac{x^3}{5\cdot 7} + \cdots$
14. State and prove Cauchy's first theorem on limits.

Atmiya University ★ Rajkot ★

15. Show that the series $\sum(-1)^n\left(\sqrt{n^2+1}-n\right)$ is conditionally convergent.
16. Find the radius of convergence and interval of convergence of the series $\sum_{n=0}^{\infty}\frac{(-1)^n}{n+1}x^{2n}$.
17. Fill in the blanks.
    (1) Every convergent sequence is _____.
    (2) Every bounded sequence is _____convergent.
    (3) The limit of positive terms sequence is always_____.
    (4) The limit of the convergent sequence is _____.
    (5) A monotonic sequence is convergent if and only if it is _____.
18. Check whether the following statements are true/false.
    (1) Every subsequence of convergent sequence is convergent.
    (2) Every subsequence of bounded sequence is bounded.
    (3) Superior of given sequence must be a member of that sequence.
    (4) The sequence $S_n = \{1,2,1,3,1,4,1,5, \ldots\}$ is not convergent. (True/ False)
19. If Q is the refinement of partition P, then for a bounded function f,
$$L(P,f) \leq L(Q,f) \leq U(Q,f) \leq U(P,f).$$
20. If a function f is continuous on $[a,b]$ and $F(x) = \int_a^b f\,dt$, then F is differential on $[a,b]$ and $F' = f$.
21. Examine the convergence $\int_{-\infty}^{\infty}\frac{dx}{e^x+e^{-x}}$.
22. Test the convergence of $\int_0^1\frac{dx}{x^2-3x+2}$.
23. Write comparison test I and II for the convergence of improper integral.
24. Give an example of improper integral of second kind.
25. Give an example of improper integral of third kind.

Dr. Neha P. Jamvecha & Dr. Monika Kumar
Dept of Mathematics,
Atmiya University

Atmiya University ★ Rajkot ★

ATMIYA UNIVERSITY

(Established under the Gujarat Private University Act 11, 2018)

Yogidham Gurukul, Kalawad Road, Rajkot - 360005, Gujarat (INDIA)

Science

Mathematics

Assignment No: AU-FoS-DepSLECode-Sem4-Course Code-21BMTCC402

Core 10: Integral and Vector Calculus

Question Bank

UG-Semester IV-Student

1. Prove in usual notation (1) $\operatorname{div}\left(\frac{\bar{r}}{r^3}\right) = 0$ (2) $\nabla r^n = nr^{n-2}\bar{r}$
2. Prove in usual notation (1) $\operatorname{div}(r^n\bar{r}) = (n+3)r^n$ (2) $\nabla^2 f(r) = f''(r) + \frac{2}{r}f'(r)$
3. Prove that $\frac{1}{r}$ satisfies Laplace equation
4. If $\bar{f}$ is irrotational then find a,b,c where $\bar{f} = (2x + 3y + az)i + (bx + 2y + 3z)j + (2x + cy + 3z)k$
5. Define: 1.Double Integral 2. Triple integral 3.Scalar point function 4. Vector point function

   5. Gradient 6. Divergence 7. Curl 8.Unit normal vector 9.Solenoidal vector 10. Irrotational vector
6. Find area of $\frac{x^2}{a^2} + \frac{y^2}{b^2} = 1$ by double integral(b<a)
7. Evaluate : $\int_0^1 \int_0^{\sqrt{1-x^2}} y^2 \, dydx$
8. Prove : $\iint_R x^{\frac{1}{2}}y^{\frac{1}{2}}(1-x-y)^{\frac{2}{3}}dxdy = \frac{27\pi}{1760}$, where R is bounded by x = 0,y = 0,x + y = 1
9. Prove : $\iiint_R (x^2 + y^2 + z^2)^5 dxdydz = \frac{4\pi a^{13}}{13}$, where R is $x^2 + y^2 + z^2 = a^2$
10. Prove : $\iint_R \sqrt{\frac{1-x^2-y^2}{1+x^2+y^2}}\,dxdy = \frac{\pi}{4}\left(\frac{\pi}{2} - 1\right)$,where R is first quadrant of unit circle
11. Prove that volume of ellipsoid $\frac{x^2}{a^2} + \frac{y^2}{b^2} + \frac{z^2}{c^2} = 1$ is $\frac{4}{3}\pi abc$
12. Prove that $\operatorname{div}(\varphi\bar{f}) = (\operatorname{grad}\varphi).\bar{f} + \varphi \operatorname{div}\bar{f}$

Atmiya University Rajkot

13. Prove that $\text{div}(\bar{f} \times \bar{g}) = \bar{g}.\text{curl}\bar{f} - \bar{f}.\text{curl}\bar{g}$

14. Change in spherical co-ordinates $\iiint_R x^2 y dx dy dz$, where R is $x^2 + y^2 + z^2 = a^2$

15. Define: Smooth curve

16. Define: Line integral

17. State and prove Divergence theorem.

18. State and prove Green's theorem.

19. State and prove first shifting property of Laplace transform.

20. Find Laplace of te-tsint.

Atmiya University
Rajkot

ATMIYA UNIVERSITY, Rajkot
Faculty of Science
Department of Mathematics

Question Bank
Academic Year: 2023-24

Program: **B.Sc. Mathematics**	Semester: **IV**
Course Code: 21BMTCC401	Course: Fundamental of Linear Algebra

Part A

1. Define binary operation.
2. Define real Euclidean $\mathbb{R}^n$ space.
3. What do you mean by linear dependence of vectors?
4. State spanning set.
5. Is union of two subspaces formed a subspace? **(Yes/No)**
6. State disjoint subspaces.
7. What are the co-ordinates of a vector relative to its basis?
8. Define minimal generating set.
9. Find norm of vector $u = (2, -3, 6)$.
10. Define inner product space.
11. Define algebraic structure.
12. A set containing only zero vector is linearly independent. **(T/F)**
13. Define linear combination of vectors.
14. Is $\mathbb{R}(\mathbb{C})$ a vector space with usual operations of addition and scalar multiplication? **(Y/N)**

Part B

15. Explain field with its properties.
16. Show that $(3,7)$ belongs to $< (1,2), (0,1) >$ but does not belons to $< (1,2), (2,4) >$.
17. Check whether $V = \{(x, y): x, y \in \mathbb{R}\}$ is a vector space with respect to the composition
$$(a, b) + (c, d) = (a, b)$$
$$\alpha(a, b) = (\alpha a, \alpha b)$$
where $(a, b), (c, d) \in V$ and $\alpha \in \mathbb{R}$.
18. Prove that every superset of a linearly dependent set of vectors is linearly dependent.
19. (i) Define internal composition.
(ii) Prove that $\mathbb{Q}$ is not a vector space over $\mathbb{R}$.

Atmiya University ★ Rajkot ★

20. Prove any two properties of vector space.

21. Can the polynomial $3x^2 - 5x + 7$ be expressed as a linear combination of the polynomials $2x^2 + 7x - 3$ and $x^2 + 3x - 5$.

22. Prove that the intersection of any family of subspaces of a vector space $V(F)$ is a subspace of $V(F)$.

23. Let $W_1 = \{(x, y, z) \in \mathbb{R}^3, x + y + z = 0\}$
$W_2 = \{(x, y, z) \in \mathbb{R}^3, x = z\}$
$W_3 = \{(0,0,z): z \in \mathbb{R}\}$. Prove that $\mathbb{R}^3 = W_1 + W_3$ and $\mathbb{R}^3 = W_2 + W_3$. Which of these sums is/are direct?

24. Prove that a minimal generating set of finitely generated vector space $V(F)$ is always a basis of V.

25. Extend the following sets of vectors to form a basis of $\mathbb{R}^3$.
(i) $(1,2,3), (2,-2,0)$
(ii) $(1,2,3), (2,1,0)$

26. Using Schwarz inequality, prove that in a unitary space $V_n(\mathbb{C})$, if $(u = (x_1, x_2, \ldots, x_n), v = (y_1, y_2, \ldots, y_n)$ then

$$\left(\sum_{i=1}^{n} x_i \bar{y}_i\right)^2 \leq \left(\sum_{i=1}^{n} |x_i|^2\right)\left(\sum_{i=1}^{n} |y_i|^2\right).$$

27. Show that the function $< u, v >= a_1 + a_2 + b_1 + b_2$ for $u = (a_1, a_2), v = (b_1, b_2) \in V_2(\mathbb{R})$ does not define an inner product on $V_2(\mathbb{R})$.

Part C

28. Check whether $A = \begin{bmatrix} 1 & 2 \\ -1 & 0 \end{bmatrix}$ is a linear combination of matrices $A_1 = \begin{bmatrix} 1 & -2 \\ 0 & 3 \end{bmatrix}$, $A_2 = \begin{bmatrix} 2 & 3 \\ 0 & -1 \end{bmatrix}, A_3 = \begin{bmatrix} 2 & -1 \\ 2 & 1 \end{bmatrix}$. If, it is, then write the relation between A, A_1, A_2 and A_3.

29. Define vector space.

30. Let $V = \mathbb{R}^2 = \{(x, y): x, y \in R, y > 0\}$ for $(a, b), (c, d) \in \mathbb{R}^2$ and $\alpha \in \mathbb{R}$ with respect to the composition

$$(a, b) + (c, d) = (a + c, bd)$$
$$\alpha(a, b) = (\alpha a, b^{\alpha}).$$

Then, prove that $V(\mathbb{R})$ is a vector space.

31. The set of non-zero vectors $v_1, v_2, \ldots, v_n$ of a vector space $V(F)$ is linearly dependent if and only if one of the vector $v_r, 2 \leq r \leq n$, is a linear combination of the preceeding vectors.

32. Define field.

33. Let $V = M_{2\times2}$, be the set of all real matrices of order 2×2 then prove that V is a vector space under usual addition and scalar multiplication of matrices.

Atmiya University Rajkot

34. If $v_1 = (2,-1,0), v_2 = (1,2,1)$ and $v_3 = (0,2,-1)$, show that v_1, v_2, v_3 are linearly independent. Express the vectors $(3,2,1), (1,1,1)$ as a linear combination of v_1, v_2, v_3.

35. The necessary and sufficient conditions for a vector space $V(F)$ to be a direct sum of its subspaces W_1 and W_2 are that
(i) $V = W_1 + W_2$
(ii) $W_1 \cap W_2 = \{0\}$.

36. Let V be the vector space of all square matrices over $\mathbb{R}$. Determine which of the following are subspaces of V.
(i) $W = \left\{\begin{bmatrix} x & y \\ z & 0 \end{bmatrix} : x, y, z \in \mathbb{R}\right\}$,
(ii) $W = \{A : A \in V, A \text{ is singular}\}$.

37. State and prove existence theorem.

38. Let W_1, W_2 be subspaces of $\mathbb{Q}^3$. If W_1, W_2 are generated by $\{(1,0,-1), (2,1,3)\}$ and $\{(-1,2,2), (2,2,-1), (3,0,-3), (2,-2,3)\}$, respectively. Then find the dimension of W_1, W_2, $W_1 \cap W_2$ and $W_1 + W_2$.

39. State and prove Gram-Schmidt orthogonalization process.

40. Show that $< u, v >= 2x_1\overline{y_1} + x_1\overline{y_2} + x_2\overline{y_1} + x_2\overline{y_2}$, defines an inner product on $V_2(\mathbb{C})$ where $u(x_1, x_2), v + (y_1, y_2) \in V_2(\mathbb{C})$.

Ravika

Atmiya University
Rajkot

ATMIYA UNIVERSITY
(Established under the Gujarat Private University Act 11, 2018)
Yogidham Gurukul, Kalawad Road, Rajkot - 360005, Gujarat (INDIA)

Faculty of Science

Department of Mathematics

Question bank (Basics of Number Theory)
UG-Semester IV-Student

---

1. (a) Show that $n^7 - n$ is divisible by 42 for every positive integer n.
   (b) Show that every prime not equal to 2 or 5 divides infinitely many of the numbers 1, 11, 111, 1111, etc.
2. Show that if $p > 3$ is a prime, then $p^2 \equiv 1 \pmod{24}$.
3. How many zeros are at the end of 1000!?
4. If p and $p^2 + 2$ are primes, show that $p^3 + 2$ is prime.
5. Show that $\gcd(2^a - 1, 2^b - 1) = 2^{\gcd(a,b)} - 1$ for positive integers a, b.
6. Suppose that a, b, c are distinct integers and that $p(x)$ is a polynomial with integer coefficients. Show that it is not possible to have $p(a) = b$, $p(b) = c$, $p(c) = a$.
7. A triangular number is a positive integer of the form $n(n+1)/2$. Show that m is a sum of two triangular numbers iff $4m + 1$ is a sum of two squares. (A-1, Putnam 1975)
8. For positive integers n define $d(n) = n - m^2$, where m is the greatest integer with $m^2 \leq n$. Given a positive integer b_0, define a sequence b_i by taking $b_{k+1} = b_k + d(b_k)$. For what b_0 do we have b_i constant for sufficiently large i? (B-1, Putnam 1991)
9. d, e and f each have nine digits when written in base 10. Each of the nine numbers formed from d by replacing one of its digits by the corresponding digit of e is divisible by 7. Similarly, each of the nine numbers formed from e by replacing one of its digits by the corresponding digit of f is divisible by 7. Show that each of the nine differences between corresponding digits of d and f is divisible by 7. (A-3, Putnam 1993)
10. Define the sequence of decimal integers a_n as follows: $a_1 = 0$; $a_2 = 1$; a_{n+2} is obtained by writing the digits of a_{n+1} immediately followed by those of a_n. When is a_n a multiple of 11? (A-4, Putnam 1998)

Atmiya University Rajkot

11. Find the value of x and y to satisfy $423x + 198y = 9$.
12. Write g in the linear combination of 7469 and 2464, where $g = (7469,2464)$.
13. Find least common multiple of 42823 and 6409.
14. Find all solution of the congruences $57x \equiv 87(mod\ 105)$.
15. Write a note on residue of x *modulo* m.
16. Prove that $n^6 - 1$ is divisible by 7 if $(n, 7) = 1$.
17. State and prove Euler's generalization of Fermat's theorem.
18. Explain any one applications of Fermat's theorem in details.
19. Write a note on solution of linear congruence.
20. State and prove any two properties of congruence *modulo* m.

Mr. Punit B. Vadher
Dept of Mathematics,
Atmiya University

Copy to:

1. Dept. Notice Board

ATMIYA UNIVERSITY
(Established under the Gujarat Private University Act 11, 2018)
Yogidham Gurukul, Kalawad Road, Rajkot - 360005, Gujarat (INDIA)

Science
Mathematics

Assignment No: AU-FoS-DepSLECode-Sem4-Course Code-21UFSDE407

21UFSDE407: Probability and distribution
Question Bank
UG-Semester IV-Student

(1) In a sample of 100 light bulbs, 2% of light bulbs are defective then find the probability that
- (i) At least 1 is defective
- (ii) Exactly 7 are defective.
- (iii) $P(1 < X < 8)$

(2) The probability distribution of a random variable X is given below. Find (i) E(X) (ii) $Var(X)$ (iii) $E(2X-3)$ (iv) $Var(2X-3)$.

X	-2	-1	0	1	2
P(X=x)	0.2	0.1	0.3	0.3	0.1

(3) It has been claimed that in 60% of all solar heat installations the utility bill is reduced by at least $\frac{1}{3}$. According what are the probability that the utility bills will be reduced by at least $\frac{1}{3}$ in
- (i) 4 of 5 installation?
- (ii) At least 4 of 5 installation?

(4) If the value of 'r' is -1 then it is called _____ correlation.

(5) Standard deviation of Binomial distribution is written as_____.

(6) Explain with diagram. Positive Correlation, No Correlation, negative correlation.

(7) What is Exhaustive event?

(8) If A and B are two events such that $P(A) = \frac{2}{3}, P(A' \cap B) = \frac{1}{6} and\ P(A \cap B) = \frac{1}{3}$ then find $P(B)$, $P(B')$, $P(A \cup B)$, $P(A' \cup B)$, $P(A|B)$ and $P(B|A)$.

(9) Write the formula for the Spearman's rank correlation.

(10) Determine the formula for variance of Poisson distribution.

(11) What is Mutually Exclusive event?

(12) The incidence of an occupational disease in an industry is such that the workers have 20% chance of suffering from it. What is the probability that out of 6 workers chosen at random, 4 or more will suffer from the disease?

(13) Calculate Karl Pearson's co-efficient of correlation of the following data

Atmiya University Rajkot

x	2	4	5	6	8	11
y	18	12	10	8	7	5

(14) The students X, Y, Z are running a race. X and Y have the same probability of winning and each is twice as likely to win as C. Find the probability that Y or Z win the race.

(15) A businessman was stay hotels X, Y, Z for 20%, 50% and 30% of the time respectively, It is known that 5%, 4% and 8% of the rooms in X, Y, Z hotels have faulty plumbing. What is the probability that businessman's room having faulty plumbing is assigned to hotel Z?

(16) Find the constant 'k' such that the function $f(x) = \begin{cases} kx^2, & 0 < x < 3 \\ 0, & otherwise \end{cases}$ is a probability density function and also find $P(1 < X < 2)$.

(17) Calculate the rank correlation coefficient if 2 judges in a beauty contest ranked the entries follows:

Judge X	1	2	3	4	5
Judge Y	5	4	3	2	1

(18) Find both the regression lines from the following data

x	2	3	4	4	5	6	6	7	7	8	10	10
y	1	3	2	4	4	4	6	4	6	7	9	10

(19) The chances that Doctor A will diagnose a disease X correctly is 60%. The chances that a patient will die by his treatment after correct diagnosis is 40% and the chance of death by wrong diagnosis is 70%. A patient of Doctor A, who had the disease X, died. What is the probability that his disease was diagnosed correctly?

(20) State and Prove Bay's Theorem.

(21) Determine the formula for variance of the Binomial distribution.

Pooja

Pooja Kacha
Dept of Mathematics,
Atmiya University

ATMIYA UNIVERSITY, Rajkot
Faculty of Science
Department of Mathematics

Question Bank
Academic Year: 2023-24

Program: **B.Sc. Mathematics**	Semester: **VI**
Course Code: **21BMTCC602**	Course: Complex Analysis

Part A

1. Given an example of complex function which is not analytic at $z = 3$.
2. Is entire function always analytic? **(Yes/No)**
3. Is $\mathbb{C} = \{z: Im\, z \neq 0\}$ connected? **(Yes/No)**
4. Define ML-inequality.
5. Write general formula of higher order derivative of analytic function.
6. State maximum modulus theorem.
7. Give an example of elementary function.
8. Is bilinear mapping under composition form an abelian group? **(Yes/No)**
9. Find the type of singularity of $\frac{(1-e^z)}{z}$ at $z = 0$.
10. Give an example of essential singularity.
11. Define continuity of complex function.
12. Give an example of an entire function.
13. What do you mean by term "Domain"?
14. Write parametric equation for the points $1 + i$ and $2 - i$.
15. State ML-inequality for complex valued function.
16. Define simple closed curve with an example.

Part B

17. If $f(z) = \frac{z}{\bar{z}}$, check whether limit exists or not, for $z \to 0$.
18. Check the differentiability of $f(z) = Re\, z$ at arbitrary fixed point z_0 in $\mathbb{C}$.
19. Derive Cauchy-Riemann equations in polar form.
20. Evaluate $\int_0^{2+i} z^2 dz$ along the line $y = \frac{x}{2}$.
21. (i) Define complex valued function with example.

Atmiya University Rajkot

(ii) Prove that $f(z) = Re(z)$ is nowhere differentiable in $\mathbb{C}$.

22 (i) Prove that every differentiable function is continuous.
(ii) Show that $f(z) = \sqrt{|xy|}, z = x + iy$ is not analytic at the origin.

23 Derive CR equation in polar form.

24 Determine the analytic function whose real part is $e^{2x}(x\cos 2y - y\sin 2y)$.

25 Evaluate $\int_C \frac{dz}{(z-z_0)^m}$, $m = 1,2,\ldots$ where C is a simple closed contour.

26 State and prove Cauchy's inequality.

27 Show that $\sin \bar{z}$ are nowhere analytic function.

28 Find the bilinear transformation that maps
(i) $0, -1, 1$ onto $1, 0, \infty$.
(ii) $\infty, i, 0$ onto $0, i, \infty$.

29 Find and classify all singularities of the given function
(i) $\frac{1}{\sin\left(\frac{\pi}{z}\right)}$ (ii) $e^{\frac{z}{z-2}}$

30 Using the Cauchy residue theorem, prove that $\int_{-\infty}^{\infty} \frac{dx}{x^2+1} = \pi$.

31 Find the positive integer n for which the equality holds
(i) $\left(\frac{\sqrt{3}}{2} + \frac{1}{2}i\right)^n = -1$
(ii) $\left(-\frac{\sqrt{2}}{2} + \frac{\sqrt{2}}{2}i\right)^n = 1$.

32 Sketch the graph of the given equation in the complex plane:
(i) $|2z - 1| = 4$
(ii) $Im(z - i) = Re(z + 4 - 3i)$

33 Sketch the set S of points in the complex plane satisfying the given inequality. Determine whether the set is (a) open (b) closed (c) a domain (d) bounded (e) connected.
(i) $|Re(z)| > 2$
(ii) $Im(z) < Re(z)$
(iii) $1 \leq |z - 1 - i| < 2$

34 Determine the points on which the following functions are continuous, differentiable and analytic:
(i) $f(z) = polynomial\ function$
(ii) $f(z) = \sin z$
(iii) $f(z) = e^z$
(iv) $f(z) = \tan z$

Atmiya University Rajkot

(v) $f(z) = Re\, z$
(vi) $f(z) = x^2 + iy^2$.

35 Show that the following limit does not exists: $\lim_{\{z\to 0\}} \left(\frac{z}{\bar{z}}\right)$.

36 Show that the function $u(x,y) = x^3 - 3xy^2$ is harmonic and find the corresponding analytic function.

37 Find the analytic function whose real part is given. Also, find imaginary part.
(i) $e^x \sin y$
(ii) $\cos x \sinh y$

38 Evaluate
$Res\left[\frac{1}{z^2+4}, 2i\right]$ (ii) $Res\left[\frac{1}{z^2+4}, -2i\right]$ (iii) $Res\left[\cos\frac{z}{z^2}, 0\right]$ (iv) $Res\left[\frac{(z^n+1)}{z^n-1}, e^{\frac{2\pi ki}{n}}\right]$

39 Calculated the residue at isolated singularity in the complex plane of the following function
(i) $e^{\frac{1}{z}}$
(ii) $\tan z$

Part C

40 Consider the function $f(z) = |z|^2$. Prove that this function is continuous in all finite region of z-plane but nowhere differentiable except at origin.

41 Show that the function defined by the equation $f(z) = \begin{cases} u(x,y) + iv(x,y) & \text{if } z \neq 0 \\ 0 & \text{if } z = 0 \end{cases}$ where $u(x,y) = \frac{x^3-y^3}{x^2+y^2}$ and $v(x,y) = \frac{x^3+y^3}{x^2+y^2}$ is not analytic at $z = 0$ although CR equations are satisfied at that point.

42. State and prove necessary & sufficient conditions for $f(z)$ to be analytic.

43 Evaluate $\int_C f(z)dz$ where $f(z) = x^2 + 3ixy$ and C is the straight line segment joining the point $1 + i$ to the point $2 - i$.

44 Derive Cauchy's integral formula.

45 Evaluate
(i) $\oint_C \frac{(4-3z)}{z(z-1)(z-2)} dz$ where C is the circle $|z| = 3/2$.
(ii) $\oint_C \frac{e^{-z}}{z+1} dz$ where C is the circle $|z| = 1/2$.

46 State and prove Taylor's theorem.

47 Represent the function $f(z) = \frac{4z+3}{z(z-3)(z+2)}$ in Laurent's series within $|z| = 1$.

48 Using residue theorem, prove that $\int_0^\infty \frac{x^2}{(x^2+9)(x^2+4)^2} dx = \frac{\pi}{200}$.

49 Evaluate $\int_{|z|=3} \frac{e^{tz}}{z^2(z^2+2z+2)} dz$.

50 Show that the following functions are continuous everywhere in complex plane.
(i) $f(z) = |z|$ (ii) $f(z) = \bar{z}$.

Atmiya University Rajkot

51 (i) Show that $f(z) = \bar{z}$ is not analytic anywhere.

(ii) Show that $f(z) = \sqrt{|xy|}, z = x + iy$ is not analytic at the origin.

52 If $f(z) = u + iv$ is an analytic function of $z = x + iy$ and $u - v = (x - y)(x^2 + 4xy + y^2)$. Find $f(z)$.

53 Evaluate $\int_C |z^2| dz$ around the square with vertices at (0,0), (1,0), (1,1), (1,0).

54 Evaluate $\int (x^2 + iy^3) dz$ over C, where C is the straight line $z = 1$ to $z = i$.

55 Evaluate $\int \left(\frac{1}{(z+i)^3} - \frac{5}{z+i} + 8\right) dz$, over C, where C is the circle $|z + i| = 1$.

56 $\oint \frac{\cos 2z}{z^5} dz : |z| = 1.$

57 $\oint \frac{z^2}{z^2+4} dz$ over C, where C is (i) $|z - i| = 2$ (ii) $|z + 2i| = 1$.

58 $\oint \frac{\sin z}{(z^2-25)(z^2+9)} dz$; C: $|z| = 1$.

59 Find the residue at $z = 0$ of the function

$\frac{1}{z+z^2}$ (ii) $z \cos \frac{1}{z}$ (iii) $(z - \sin z)/z$ (iv) $\frac{\cot z}{z^4}$

60 Find the nature of singularities and find the residue:

$\frac{e^{2z}}{(z-1)^3}$ (ii) $\frac{1}{(z^2)(z-3)^2}$ (iii) $\frac{z-\sin z}{z^3}$

61 Obtain the Laurent's Series of the function $f(z) = \frac{1}{(z-1)(z-3)}$ in the neighborhood of (i) $z = 1$ and (ii) $z = 3$

62 Expand $f(z) = \frac{z}{(z-1)(2-z)}$ in the Laurent's series for (i) $|z| < 1$ (ii) $1 < |z| < 2$ (iii) $|z| > 2$

Daniks

Atmiya University Rajkot

ATMIYA UNIVERSITY
(Established under the Gujarat Private University Act 11, 2018)
Yogidham Gurukul, Kalawad Road, Rajkot - 360005, Gujarat (INDIA)

Atmiya University, Rajkot

Programme: B.Sc. Mathematics **Course: Graph Theory**

Class: Semester: 6 **Course code: 21BMTCC603**

Question Bank

(1) The no. of odd vertices in graph G is _____number.
(a) an even (b) an odd (c) None of these

(2) A complete graph with n vertices is _____ regular graph.
(a) n (b) n-1 (c) n(n-1) (d) n(n-1)/2

(3) The no. of edges in complete graph is _____.
(a) $\frac{(n+1)}{2}$ (b) $\frac{(n-1)}{2}$ (c) $\frac{(n^2-n)}{2}$ (d) $\frac{n}{2}$

(4) A tree with 10 vertices has _____edges.
(a) 9 (b) 9/2 (c) 11 (d) 11/2

(5) If the degree of each vertex of graph is same then graph is called_____.
(a) Complete graph (b) Regular graph (c) Euler graph (d) Hamiltonian circuit

(6) In which graph ,it does not include a self loop or parallel edges.
(a) complete graph (b) simple graph
(c) Hamiltonian path (d) all above

(7) In which graph,if removal of any one edge from connected graph it will disconnect the graph
(a) Hamiltonian path (b) edge deleted graph
(c) minimal connected graph (d) complement of a graph

(8) Let G=(V,E) be a graph. If G is Null graph then which of the following is true?
(a) $E = \phi$ (b) only vertex set (c) only edge set (d) (a)&(b) both

(9) A simple graph with n-vertices & k-component can have atmost _____edges.
(a) $\frac{(n-k)(n-k+1)}{2}$ (b) $\frac{(n+k)(n+k+1)}{2}$ (c) $\frac{n(k+1)}{2}$ (d) $\frac{n(n-1)}{2}$

(10) A fundamental cutset of graph G corresponding to spanning tree T containing _____.
(a) exactly one branch of T (b) exactly one chord of T
(c) exactly one circuit of T (d) none of these

(11) A fundamental circuit of graph G corresponding to spanning tree T containing _____.
(a) exactly one branch of T (b) exactly one chord of T

Atmiya University Rajkot

(c) exactly one circuit of T (d) none of these

(12) A connected planner graph with n-vertices , e-edges has _____regions.

(a) $f = n - e + 2$ (b) $f = e - n + 2$ (c) $f = n + 2$ (d) $f = e - 2$

(13) A row with all 0's in incident matrix therefore it represents _____ vertex.

(b) isolated (b) pendent (c) (a) & (b) both (d) none of these

(14) If two or more edges have same terminal vertices then such edges are called_____ edges.

(a) adjacency (b) parallel (c) (a)&(b) both (d) None of these

(15) Degree of each vertex in n-regular graph is_____.

(a) n (b) n-1 (c) n(n-1) (d) None of these

(16) A vertex of degree one is called_____.

(a) even vertex (b) odd vertex (c) isolated (d) pendent

(17) A closed walk contains all the edges of graph then such walk is called_____.

(a) an Euler line (b) an Open Euler line

(c) a Hamiltonian circuit (d) a Hamiltonian path

(18) Euler graph's do not have any _____ vertices.

(a) Adjacency (b) isolated (c) pendent (d) (b)&(c) both

(19) An open walk in which no vertex appears more than once is called _____.

(a) walk (b) path (c) cycle (d) Hamiltonian circuit

(20) The relation between vertex & edge is _____ relation.

(a) incidence (b) adjacency (c) walk (d) none of these

(21) In a connected graph G ,_____is a set of edges whose removal leaves G disconnected provided that no proper subset of these edge is a cutest.

(a) cutset (b) fundamental cutset

(c) cut vertex (d) edge connectivity

(22) In a connected graph G ,a vertex whose removal disconnect graph is called_____.

(a) cut node (b) cut vertex

(c) (a)&(b) both (d) vertex connectivity

(23) The maximum vertex connectivity of graph G with n-vertices , e-edges is _____.

(a) $\frac{2n}{e}$ (b) $\frac{2e}{n}$ (c) n (d) none of these

(24) A graph has vertex connectivity one is called _____.

(a) Separable graph (b) block (c) cut vertex (d) none of these

(25) If A & B are 1-isomorphic graphs and rank of A is 3 then rank of B is _____.

(a) 2 (b) 4 (c) 3 (d) 1

(26) A complete graph with 5 vertices is _____.

(a) planner (b) non planner (c) Separable graph (d) none of these

(27) Which graph is self dual graph?

(b) $k_{3,3}$ (b) k_3 (c) k_4 (d) k_5

Atmiya University Rajkot

(28) $\dim(w_T)$ = _____.

(c) μ (b) e-n+k (c) only (a) (d) (a) & (b) both

(29) $\dim(w_S)$ = _____.

(b) μ (b) r (c) n-k (d) (b) & (c) both

(30) $n(w_T)$ = _____.

(a) 2^n (b) 2^μ (c) 2^r (d) 2^e

(31) The adjacency matrix was defined only for graphs _____.

(b) Without parallel edges (b) isolated vertex

(c) pendent vertex (d) loop

(32) Let G=(V,E) be a graph. If there is at least one path between each pair of vertices then G is __

(a) a connected graph (b) a tree

(c) a complete graph (d) none of these

(33) If the no.of vertices is 21 in binary tree then the no. of internal vertices is _____.

(a) 11 (b) 10 (c) 12 (d) 20

(34) A disconnected graph with 2016 components has collection of _____ spanning trees.

(a) 2017 (b) 2016 (c) 2014 (d) 2015

(101) Define: Regular graph.

(102) Give the no. of edges in complete graph with 100 vertices.

(103) Let G=(V,E) be a graph. If G is Null graph then which of the following is true?

(a) $E = \phi$ (b) only vertex set (c) only edge set (d) (a)&(b) both

(104) A simple graph with n-vertices & k-component can have atmost _____edges.

(105) A closed walk contains all the edges of graph then such walk is called_____.

(106) True or false : Euler graph's do not contains any isolated & pendent vertices.

(107) In which graph , it does not include a self loop or parallel edges.

(108) Give the name of an open walk in which no vertex appears more than once .

(109) What is the relation between vertex & edge .

(110) In which graph ,it does not include a self loop or parallel edges.

(111) Give an example of a graph which is Euler but not Hamiltonian circuit.

(112) Define: Hamiltonian circuit.

(113) Count the number of edges in which graph 3 vertices of degree 5,a pendent vertex, 5 vertices of degree 4.

(114) Define: Degree of vertex.

Define minimal connected graph.

(102) Find rank and nullity of complete graph.

(103) Every connected graph contains Hamiltonian circuit? Justify your answer.

(104) Define cutset and give with example it.

(105) Prove that the edge-connectivity of a graph G cannot exceed the degree of vertex with the smallest degree in G.

(106) Give basis and dimension of subspace w_s .

(107) A disconnected graph with 2017 components has collection of 2017 spanning trees is called forest. True or False

Atmiya University Rajkot

(108) State Euler's formula.

(109) Define self dual graph and give the name of self dual graph.

(110) Define adjacency matrix.

2 marks

1) Give an example of a graph which is Euler graph but not Hamiltonian graph.
2) Define degree of vertex.
3) If the edge set of graphs $G_1 = (V_1, E_1)$ & $G_2 = (V_2, E_2)$ are disjoint then show that $G_1 \oplus G_2 = G_1 \cup G_2$.
4) Define spanning tree.
5) Define planner graph.
6) Show that the no. of vertices n in a binary tree is always odd.
7) Define independent set and define decyclization.
8) Find rank & nullity of unicycle graph.
9) Define incidence matrix.
10) State the first theorem of graph theory.

3 marks

1) State & prove second theorem of graph theory.
2) State & prove first theorem of graph theory.
3)
4) Show that the maximum no. of edges in simple graph having n vertices is
$$\frac{n(n-1)}{2}$$
5) Define complement of a subgraph g of a graph G and prove that $G \oplus g = G - g$.
6) State and prove necessary & sufficient condition for a graph to be disconnected.
7) Prove that a simple graph with n-vertices and k-components can have atmost $\frac{(n-k)(n-k+1)}{2}$ edges.
8) Every tree with two or more vertices is 2-chromatic.
9) If the no. of vertices is n in binary tree then show that the no. of pendent vertices in binary tree is $\left(\frac{n+1}{2}\right)$.
10) If the no. of vertices is n in binary tree then show that the no. of Internal vertices in binary tree is $\left(\frac{n-1}{2}\right)$.
11) Show that w_T is subspace of w_G overfield GF_2 under operation $\oplus$ & $\bullet$.

5 marks

1) State & prove Euler's theorem.
2) A tree with n vertices has n-1 edges.

Atmiya University Rajkot

3) A graph is a tree $\Leftrightarrow$ it is a minimal connected graph.
4) Find the no. of internal vertices in a binary tree.
5) Show that Kurtowski's second graph is non-planner graph.
6) Define plannar graph.Show that Kurtowski's second graph is non-planner graph.
7) Define plannar graph.Show that Kurtowski's first graph is non-planner graph.

ATMIYA UNIVERSITY
(Established under the Gujarat Private University Act 11, 2018)

Yogidham Gurukul, Kalawad Road, Rajkot - 360005, Gujarat (INDIA)

Science

Mathematics

SEM-6-Course Code-**21BMTCC605** Date: 03/03/2024

Mathematical Programming

Question Bank

UG-Semester VI

Department: Mathematics

1 Solve the following LPP using Two phase method: **Minimize** $Z = x_1 + x_2$
subject to constraint $2x_1 + x_2 \geq 4, x_1 + 7x_2 \geq 7$ and $x_1, x_2 \geq 0$.

2 Solve the following LPP using Simplex method: **Minimize** $Z = x_1 - 2x_2 - 3x_3$
subject to the constraints $-2x_1 + 3x_2 + 3x_3 = 2, 2x_1 + 3x_2 + 4x_3 = 1$ and $x_1, x_2, x_3 \geq 0$.

3 Solve the following problem by Hungarian assignment problem:

	J1	J2	J3	J4
1	12	30	21	15
2	18	33	9	31
3	23	30	28	14

4 Solve the assignment problem represented by the following matrix:

		Machine					
		I	**II**	**III**	**IV**	**V**	**VI**
Jobs	**A**	9	22	58	11	19	27
	B	43	78	72	50	63	48
	C	41	28	91	37	45	33
	D	74	42	27	49	39	32
	E	36	11	57	22	25	18
	F	3	56	53	31	17	28

5 For the following payoff matrix, transform the zero sum game into equivalent linear programming problem and solve it by using simplex method.

Atmiya University Rajkot

	Player A	**Player B**		
		B1	**B2**	**B3**
	A1	1	-1	3
	A2	3	5	-3
	A3	6	2	-2
6	Explain Graphical method and using it to find value of game for the following.			
		B1	**B2**	**B3**	**B4**
	A1	2	2	3	-1
	A2	4	3	2	6
7	Explain principle of dominance in game theory.			
8	Explain Algebraic method in game theory.			

Mrs. Miral P. Ambavi
Dept of Mathematics,
Atmiya University

Copy to:

1. Dept. Notice Board

Atmiya University Rajkot

ATMIYA UNIVERSITY
(Established under the Gujarat Private University Act 11, 2018)
Yogidham Gurukul, Kalawad Road, Rajkot - 360005, Gujarat (INDIA)

Faculty of Science

Department of Mathematics

Question Bank (Advanced Topics in Numerical Analysis)
UG-Semester VI-Student

1. The values of annuities for certain ages are given for the following ages. Find the annuity at age 27½ using Gauss's forward interpolation formula.

Age	25	26	27	28	29
Annuity	16.195	15.919	15.630	15.326	15.006

2. Using Gauss's forward interpolation formula, find y at $x = 1.7489$ given that

x	1.72	1.73	1.74	1.75	1.76	1.77	1.78
y	0.1791	0.1773	0.1775	0.1738	0.1720	0.1703	0.1686

3. Find $\sqrt{12516}$ using Gauss's backward interpolation foumula given that $\sqrt{12500} = 111.8033$, $\sqrt{12510} = 111.8481$, $\sqrt{12520} = 111.8928$ and $\sqrt{12530} = 111.9374$.

4. Find sin 45° using Gauss's backward interpolation formula given that sin 20° = 0.342, sin 30° = 0.502, sin 40° = 0.642, sin 50° = 0.766, sin 60° = 0.866, sin 70° = 0.939, sin 80° = 0.984.

5. Employ Bessel's formula to find the value of y at $x = 1.95$ given that

x	1.7	1.8	1.9	2.0	2.1	2.2	2.3
y	2.979	3.144	3.283	3.391	3.463	3.997	4.491

6. Use Bessel's formula to find the value of y when $x = 3.75$ given the table:

x	2.5	3.0	3.5	4.0	4.5	5.0
y	24.145	22.043	20.225	18.644	17.262	16.047

Atmiya University Rajkot

7. Given cos (0.8050) = 0.6931, cos (0.8055) = 0.6928, cos (0.8060) = 0.6924, cos (0.8065) = 0.6920, cos (0.8070) = 0.6917, cos (0.8075) = 0.6913, and cos (0.8080) = 0.6909, find cos (0.806595) using Stirling's formula.

8. Apply Stirling's formula to find a polynomial of degree four which takes

x	1	2	3	4	5
y	1	−1	1	−1	1

9. Use Laplace–Everett's formula to find log 337.5 given that log 310 = 2.4913, log 320 = 2.5051, log 330 = 2.5185, log 340 = 2.5315, log 350 = 2.5441 and log 360 = 2.5563.

10. Find y at $x = 34$ using Laplace – Everett's formula given the table.

x	20	25	30	35	40
y	11.4699	12.7834	13.7648	14.4982	15.0463

11. The following table gives the values of the probability integral $f(x) = \frac{2}{\sqrt{\pi}} \int_0^x e^{-x^2} dx$ for certain values of x. Find the value of their integral at $x = 0.5437$ using (i) Stirling's formula, (ii) Bessel's formula, and (iii) Everett's formula.

x	0.51	0.52	0.53	0.54	0.55
y	0.5292437	0.5378987	0.5464641	0.5549392	0.5633233

x	0.56	0.57
y	0.5716157	0.5798158

ANSWERS

1. 15.480
2. 0.1739
3. 111.8749
4. 0.707
5. 3.347
6. 19.4074
7. 0.6919
8. $\frac{1}{2}\{2(x-3)^4 - 8(x-3)^2 + 3\}$
9. 2.5283
10. 14.3684
11. 0.55805196, 0.55805196, 0.55805195.

Atmiya University Rajkot

EXERCISE 8.1

1. If $f(x) = x^{-2}$ show that $f(a, b, c, d) = -\dfrac{(abc + bcd + acd + abd)}{a^2b^2c^2d^2}$

2. If $f(x) = x^3$ show that $f(a^3, b^3, c^3) = a + b + c$.

3. If $f(x) = x^{-1}$ show that $f(x_0, x_1, \ldots, x_n) = \dfrac{(-1)^n}{x_0, x_1, \ldots, x_n}$

4. If $f(x) = x^3 - 9x^2 + 17x + 6$, compute $f(-1, 1, 2, 3)$.

5. The following table gives some relation between steam pressure and temperature. Find the pressure at 372.1°

Temp.°C	361°	367°	378°	387°	399°
Pressure (kgf/cm²)	154.9	167.9	191	212.5	244.2

Atmiya University Rajkot

6. Using Newton's divided difference formula, evaluate $f(8)$ and $f(15)$ given that

x	4	5	7	10	11	13
$f(x)$	48	100	294	900	1210	2028

7. The observed values of a function are 168, 120, 72 and 63 at the four positions 3, 7, 9 and 10 of the argument, respectively. What is the best estimate for the value of the function at position 6.

Fit a polynomial of third degree to the following data using Newton's divided difference method.

x	0	1	2	4	5	6
$f(x)$	1	14	15	5	6	9

9. If $f(0) = -18, f(1) = 0, f(3) = 0, f(5) = -248, f(6) = 0, f(9) = 13104$, find $f(x)$.

10. From the following table, obtain $f(x)$ as a polynomial in powers of $(x-5)$ using Newton's method.

x	0	2	3	4	5	6
$f(x)$	4	26	58	112	466	922

ANSWERS

4. 1 5. 177.84 6. 448, 3150 7. 147

8. $f(x) = x^3 - 9x^2 + 21x + 1$ 9. $f(x) = x^5 - 9x^4 + 18x^3 - x^2 + 9x - 18$

10. $f(x) = 194 + 98(x-5) + 17(x-5)^2 + (x-5)^3$

Atmiya University Rajkot

EXERCISE 8.2

1. Given that $\log_{10}300 = 2.4771$, $\log_{10}304 = 2.4829$, $\log_{10}305 = 2.4843$ and $\log_{10}307 = 2.4871$, find by using Lagrange's formula, the value of $\log_{10}310$. *(Karnataka 1993)*

2. Given the values $f(14) = 68.7$, $f(17) = 64$, $f(31) = 44$ and $f(35) = 39.1$, find $f(27)$ using Lagrange's formula.

3. Given: $u_1 = 22$, $u_2 = 30$, $u_4 = 82$, $u_7 = 106$ and $u_8 = 206$. Find u_6 using Lagrange's interpolation formula.

4. The amount A of a substance remaining in a reacting system after an interval of time t in a certain chemical experiment is given by the following data:

t	2	5	8	14
A	94.8	87.9	81.3	68.7

Find the value of A at $t = 11$

Atmiya University Rajkot

5. The following table gives the viscosity of an oil as a function of temperature. Use Lagrange's formula to find the viscosity of oil at a temperature of 140°.

$T°$	110	130	160	190
Viscosity	10.8	8.1	5.5	4.8

6. The following are the measurements of t made on a curve recorded on an oscillograph representing a change in the conditions of electric current i.

t	1.2	2.0	2.5	3.0
i	1.36	0.58	0.34	0.20

Find the value of i at $t = 1.6$.

7. Using a polynomial of third degree, complete the record given below of the export of a certain commodity during five years.

Year	1917	1918	1919	1920	1921
Export (in tons)	443	384	–	397	467

8. The following data give the percentage of criminals for different age groups:

Age (less than x)	25	30	40	50
% of criminals	52	67.3	84.1	94.4

Using Lagrange's formula, find the percentage of criminals under the age of 35.

9. If $y_0, y_1, y_2, \ldots, y_6$ are the consecutive terms of a series, then using Lagrange's formula prove that $y_3 = 0.05\,(y_0 + y_6) - 0.3\,(y_1 + y_5) + 0.75\,(y_2 + y_4)$.

10. Given that $f(-1) = -2, f(0) = -1, f(2) = 1, f(3) = 4$, fit a polynomial of third degree.

11. Determine $f(x)$ as a polynomial in x for the following data:

x	–4	–1	0	2	5
$f(x)$	1245	33	5	9	1335

Atmiya University Rajkot

12. Find a polynomial of fifth degree from the following data:

x	0	1	3	5	6	9
$f(x)$	–18	0	0	–248	0	13104

(M.U. 1991)

13. Apply Lagrange's formula inversely to obtain the root of $f(x) = 0$, given that $f(30) = -30, f(34) = -13$ $f(38) = 3$ and $f(42) = 18$.

(M.U. B.E, 1993)

14. Given that $f(0) = 16.35, f(5) = 14.88, f(10) = 13.59$ and $f(15) = 12.46$, find x when $f(x) = 14$.

15. Find x when $f(x) = 0.163$, given that

x	80	82	84	86	88
$f(x)$	0.134	0.154	0.176	0.200	0.221

16. Obtain the value of t when $A = 85$ in Problem 4. *(Madurai B.E, 1983)*

17. The following table gives the values of the probability integral $P(x) = \frac{2}{\sqrt{\pi}} \int_0^x e^{-x^2} dx$. For what value of x, $P(x) = 0.5$?

x	0.45	0.46	0.47	0.48	0.49	0.50
$P(x)$	0.4755	0.4847	0.4937	0.5027	0.5117	0.5205

18. Given that $f(10) = 1754, f(15) = 2648, f(20) = 3564$, find the value of x when $f(x) = 3000$ by iterative method.

19. Given $\cosh x = 1.285$, find x by iterative method using the following data:

x	0.736	0.737	0.738	0.739	0.740	0.741
$\cosh x$	1.28330	1.28410	1.28490	1.28572	1.23652	1.28733

20. Solve the equation

(i) $x^3 - 6x - 11 = 0$ $(3<x<4)$ and

(ii) $x = \frac{1}{2} + \sin x$ by iterative method.

Atmiya University Rajkot

ANSWERS

1. 2.4786
2. 49.3
3. 83.515
4. 74.9
5. 7.03
6. 0.8908
7. 369
8. 77.4

10. $f(x) = \frac{1}{6}(x^3 - x^2 + 4x - 6)$

11. $f(x) = 3x^4 - 5x^3 + 6x^2 - 14x + 5$

12. $f(x) = x^5 - 5x^4 + 6x^3 - x^2 + 5x - 6$
13. 37.23
14. 8.34
15. 82.8
16. 6.5928
17. 0.477
18. 16.9
19. 0.73811
20. (i) 3.092 (ii) 1.4973

Atmiya University Rajkot

EXERCISE 9.1

1. Find the first and second derivatives of the function tabulated below at the point $x = 19$

x	1.0	1.2	1.4	1.6	1.8	2.0
$f(x)$	0	0.128	0.544	1.296	2.432	4.00

(Madras 1991)

2. The following data gives corresponding values of pressure and specific volume of super-heated steam.

V	2	4	6	8	10
P	105	42.07	25.3	16.7	13

(i) Find the rate of change of pressure with respect to volume when $V = 2$.

(ii) Find the rate of change of volume with respect to pressure when $P = 105$.

3. Find $y'(0)$ and $y''(0)$ from the following table:

x	0	1	2	3	4	5
y	4	8	15	7	6	2

4. From the values in the table given below, find the value of sec 31° using numerical differentiation.

$\theta°$	31	32	33	34
$\tan\theta$	0.6008	0.6249	0.6494	0.6745

Atmiya University Rajkot

5. The table given below reveals velocity V of a body during time 't' specified. Find its acceleration at $t = 1.1$

t	1.0	1.1	1.2	1.3	1.4
v	43.1	47.7	52.1	56.4	60.8

6. A rod is rotating in a plane. The following table gives the angle θ (radians) through which the rod has turned for various values of time t in seconds.

t	0	0.2	0.4	0.6	0.8	1.0	1.2
θ	0	0.122	0.493	0.123	2.022	3.200	4.61

Find the angular velocity and angular acceleration at $t = 0.6$.

7. From the following table of values of x and y, find y' (1.25) and y'' (1.25).

x	1.00	1.05	1.10	1.15	1.20	1.25	1.30
y	1.00000	1.02470	1.04881	1.07238	1.09544	1.11803	1.14017

8. Obtain the value of f' (0.04) using Bessel's formula given the table below:

x	0.01	0.02	0.03	0.04	0.05	0.06
$f(x)$	0.1023	0.1047	0.1071	0.1096	0.1122	0.1148

9. Use Stirling's formula to compute f' (0.5) from the following data:

x	0.35	0.40	0.45	0.50	0.55	0.60	0.65
$f(x)$	1.521	1.506	1.488	1.467	1.444	1.418	1.389

10. A slider in a machine moves along a fixed straight rod. Its distance x (cm) along the rod is given below for various values of time t seconds. Find the veocity of the slider and its acceleration when $t = 0.3$.

t	0	0.1	0.2	0.3	0.4	0.5	0.6
x	30.13	31.62	32.87	33.64	33.95	33.81	33.24

Atmiya University Rajkot

11. For the following pairs of values of x and y, find numerically the first derivative at $x = 4$.

x	1	2	4	8	10
y	0	1	5	21	27

12. Find the value of $f'(7.60)$ from the following table using Gauss's formula.

x	7.47	7.48	7.49	7.50	7.51	7.52	7.53
$f(x)$	0.193	0.195	0.198	0.201	0.203	0.206	0.208

13. Find the maximum and minimum values of the function from the following table:

x	0	1	2	3	4	5
$f(x)$	0	0.25	0	2.25	16.00	56.25

14. From the table below, for what value of x, y is maximum. Also find this value of y.

x	3	4	5	6	7	8
y	0.205	0.240	0.259	0.262	0.250	0.224

15. Given the following data, find the maximum value of y.

x	0	2	3	4	7	9
y	4	26	58	112	466	922

ANSWERS

1. 0.63, 6.6
2. –52.4, –0.01908
3. –27.9,117.67
4. 1.17
5. 44.917
6. 3.82 rad/sec 6.75 rad/sec^2
7. 0.44733, 0.158332
8. 0.25625
9. –0.44
10. 5.33, –45.6
11. 2.8326
12. 0.223
13. Maximum value = 0.25 at $x = 1$; Minimum value 0 at $x = 0$ or 2
14. Minimum value = 0.2628 at $x = 5.6875$
15. No maximum or minimum value

Atmiya University Rajkot

EXERCISE 9.2

1. Evaluate $\int_0^2 y\,dx$ from the following table using Trapezoidal rule.

x	0	0.2	0.4	0.6	0.8	1.0	1.2	1.4	1.6	1.8	2.0
y	1.21	1.37	1.46	1.59	1.67	2.31	2.91	3.83	4.01	4.79	5.31

2. Find an approximate value of $\log_e 5$ by calculating to four decimal places by Simpson's 1/3 rule the integral $\int_0^5 \frac{dx}{4x+5}$, dividing the range into 10 equal parts.

3. Apply Simpson's 3/8 rule to evaluate $\int_0^2 \frac{dx}{1+x^3}$ to two decimal places by dividing the range into ~~eight~~ nine equal parts.

4. Evaluate $\int_0^{10} e^x\,dx$ by Weddle's rule given that $e^0 = 1$, $e^1 = 2.72$, $e^2 = 7.39$, $e^3 = 20.09$, $e^4 = 54.60$, $e^5 = 148.41$, $e^6 = 403.43$, $e^7 = 1096.63$, $e^8 = 2980.96$, $e^9 = 8103.08$, $e^{10} = 22026.47$

5. Evaluate $\int_0^{\frac{\pi}{2}} \sin x\,dx$ by (i) Trapezoidal rule, (ii) Simpson's rule using 11 ordinates. Also estimate the errors by finding the value of the integral.

6. Calculate the value of the following integrals by (i) Trapezoidal rule, (ii) Simpson's 1/3 rule, (iii) Simpson's 3/8 rule, and (iv) Weddle's rule. After finding the true value of the integral, compare the errors in the four cases

(i) $\int_4^{5.2} \log x\,dx$ (ii) $\int_{0.2}^{1.4} (\sin x - \log_e x + e^x)\,dx$

Atmiya University Rajkot

7. A river is 80 feet wide. Depth d in feet at a distance of x feet from one bank is given by the following table

x	0	10	20	30	40	50	60	70	80
d	0	4	7	9	12	15	14	8	3

Find approximately the area of the cross-section.

8. Find the approximate distance travelled by a train between 11.50 a.m. and 12.30 p.m. from the following data using Simpson's 1/3 rule.

time	11.50 a.m.	12.00	12.10 p.m.	12.20 p.m.	12.30 p.m.
Speed m.p.h.	24.2	35.0	41.3	42.8	39.2

9. A rocket is launched from the ground. Its acceleration is registered during the first 80 seconds and is given in the table below. Using Simpson's 1/3 rule, find the velocity and height of the rocket at $t = 80$.

t (s)	0	10	20	30	40	50	60	70	80
a (m/s^2)	30	31.63	33.64	35.47	37.75	40.33	43.25	46.69	50.67

10. When a train is moving at 30 miles an hour, steam is shut off and brakes are applied. The speed of the train in miles per hour after t seconds is given by

t	0	5	10	15	20	25	30	35	40
v	30	24	19.5	16	13.6	11.7	10.0	8.5	7.0

Determine how far the train has moved in the 40 seconds.

11. The speed of an electric train at various times after leaving one station until it stops at the next station are given in the following table:

Speed in m.p.h	0	13	33	39.5	40	40	36	15	0
Time in min	0	0.5	1	1.5	2	2.5	3	3.25	3.5

Find the distance between the two stations.

Atmiya University Rajkot

12. A solid of revolution is formed by rotating about the x-axis, the area between x-axis and lines $x = 0$ and $x = 1$, and a curve through the points with the following coordinates.

x	0	0.25	0.50	0.75	1
y	1	0.9896	0.9589	0.9089	0.8415

Estimate the volume of the solid formed using Simpson's 1/3 rule.

13. A curve passes through the points (1, 0.2), (2, 0.7), (3, 1), (4, 1.3), (5, 1.5), (6, 1.7), (7, 1.9), (8, 2.1), (9, 2.3). Using Weddle's rule, estimate the volume generated by revolving the area between the curve x axis and the ordinates $x = 1$ and $x = 9$ about the x axis.

14. The table below gives the velocity v of a moving particle at time t. Find the distance covered by the particle in 12 s and also the acceleration at $t = 2$ s.

t	0	2	4	6	8	10	12
v	4	6	16	34	60	94	136

15. Estimate the length of the arc of the curve $3y = x^3$ from (0, 0) to (1, 3) using Simpson's 1/3 rule taking eight sub-intervals.

16. Apply Romberg's method to evaluate $\int_4^{5.2} \log x \, dx$ given that $\log_e 4 = 1.3863$, $\log_e 4.2 = 1.4351$, $\log_e 4.4 = 1.4816$, $\log_e 4.6 = 1.526$, $\log_e 4.8 = 1.5686$, $\log_e 5 = 1.6094$, $\log_e 5.2 = 1.6486$.

17. Evaluate $\int_0^1 \frac{dx}{1+x}$ correct to three decimal places by Trapezoidal rule with $h = 0.5, 0.25,$ and 0.125. Use Romberg's method to get an accurate value for the definite integral. Hence find the value of $\log_e 2$.

18. A reservoir discharging water through sluices at a depth h feet below the water surface, has a surface area A for various values of h as given below.

h (ft)	10	11	12	13	14
A (in sq ft)	950	1070	1200	1350	1530

If t denotes time in minutes, the rate of fall of the surface is given by $dh/dt = \frac{-48\sqrt{h}}{A}$. Estimate the time taken for the water level to fall from 14 to 10 feet above the sluices.

Atmiya University Rajkot

ANSWERS

1. 5.44
2. 1.6101
3. 0.8687
4. 24256.53
5. 0.9981, 1.0006; 0.0019, –0.0006
6. (i) 1.8276551, 1.8278472, 1.827847, 1.8278475
   errors: 0.0001924, 0.0000003, 0.0000005, 0.0000001
   (ii) 4.05617, 4.05106, 4.05116, 4.05098
   errors: –0.00522, –0.00011, –0.00021, –0.00003
7. 710 sq. ft
8. 25.4 miles
9. 30.87 m/s, $h = 112.75$ km
10. 296.7 yards
11. 5/3 miles
12. 2.8192
13. 59.68 cu. units
14. 532 m, 3 m/s²
15. 1.0893 units
16. 1.8278
17. 0.708, 0.697, 0.694; 0.6931
18. 29 min(approx.)

Atmiya University Rajkot

EXERCISE 10.1

Form the difference equations by eliminating arbitrary constants.

1. $y = C_1 3^x + C_2 8^x$
2. $y = C_1x^2 + C_2x + 9$
3. $y = (C_1 + C_2n)(-2)^n$
4. $y = C_1x^2 + C_2x + C_3$

Solve the following difference equations.

5. $y_{n+3} - 2y_{n+2} - y_{n+1} + 2y_n = 0$
6. $y_{x+4} + y_{x+3} - 13y_{x+2} - y_{x+1} + 12y_x = 0$
7. $y_{n+2} + 2y_{n+1} + 4y_n = 0$
8. $\Delta^3 u_n - 5\Delta u_n + 4u_n = 0$
9. $u_{k+4} + 6u_{k+3} + 9u_{k+2} - 4u_{k+1} - 12u_k = 0$
10. $y_{x+4} - 9y_{x+3} + 30y_{x+2} - 44y_{x+1} + 24y_x = 0$
11. $y_{x+2} - y_{x+1} + y_x = 0$, given $y_0 = 1$ and $y_1 = \dfrac{1+\sqrt{3}}{2}$
12. $u_{x+4} - 5u_{x+3} + 8u_{x+1} - 4u_x = 0$, given $u_0 = 3$, $u_1 = 2$, and $u_4 = 22$
13. If y_k satisfies the difference equation $y_{k+1} - \alpha y_k + y_{k-1} = 0$, $k = 1, 2, 3$ and the end conditions $y_0 = y_4 = 0$, show that non-trivial solution exists when $\alpha = 0, \pm\sqrt{2}$.
14. If y_n satisfies $y_{n+1} - 2y_n \cos\alpha + y_{n-1} = 0$ for $n = 1,2, \ldots$ and if $y_0 = 0, y_1 = 0$, find y_2, y_3, y_4.

Solve the following difference equations.

15. $y_{x+2} - 6y_{x+1} + 8y_x = 4^x$
16. $y_{n+2} - 3y_{n+1} + 2y_n = 5^n + 2^n$
17. $u_{x+2} - 4u_{x+1} + 4u_x = 3.2^x + 5.4^x$
18. $u_{n+2} - 4u_{n+1} + 3u_n = 2^n + 3^n + 7$
19. $y_{x+2} - 5y_{x+1} + 6y_x = x^2 + x + 1$
20. $\Delta^2 u_x + 2\Delta u_x + u_x = 3x + 2$
21. $\Delta u_x + \Delta^2 u_x = \cos x$
22. $u(x+2) - 7u(x+1) + 12u(x) = \cos x$
23. $u_{n+2} - 7u_{n+1} - 8u_n = 2^n n^2$
24. $u_{x+2} - 2u_{x+1} + u_x = 2^x x^2$
25. $2u_{n+2} + 5u_{n+1} + 2u_n = 2^n + n^2$

ANSWERS

1. $y_{x+2} - 11y_{x+1} + 24y_x = 0$
2. $x(1+x)y_{x+2} - 2x(x+2)y_{x+1} + (x^2 + 3x + 2)y_x + 9 = 0$
3. $y_{n+2} + 4y_{n+1} + 4y_n = 0$

Atmiya University Rajkot

4. $y_{x+3} - 3y_{x+2} + 3y_{x+1} - y_x = 0$
5. $y_n = C_1 + C_2(-1)^n + C_3 2^n$
6. $y_x = C_1 + C_2(-1)^x + C_3 3^x + C_4(-4)^x$
7. $y_n = \left\{C_1 \cos\frac{2n\pi}{3} + C_2 \sin\frac{2n\pi}{3}\right\} 2^n$
8. $u_n = C_1 2^n + C_2\left[\frac{1+\sqrt{17}}{2}\right]^n + C_3\left[\frac{1-\sqrt{17}}{2}\right]^n$
9. $u_k = C_1 + C_2(-3)^k + (C_3 + C_4 k)(-2)^k$
10. $y_x = (C_1 + C_2 x + C_3 x^2)2^x + C_4(-3)^x$
11. $y_x = \cos\frac{n\pi}{3} + \sin\frac{n\pi}{3}$
12. $y_x = 6 + (-3 + n)2^n$
14. $y_2 = 2\cos\alpha$; $y_3 = 4\cos^2\alpha - 1$; $y_4 = 8\cos^3\alpha - 4\cos\alpha$
15. $y_x = C_1 2^x + C_2 4^x + \frac{x}{8} 4^x$
16. $y_n = C_1 + C_2 2^n + \frac{5^n}{12} - n\,2^{n-1}$
17. $u_x = (C_1 + C_2 x)2^x + 3x(x-1)\,2^{x-3} + 5 \cdot 4^{x-1}$
18. $u_n = C_1 + C_2 3^n - 2^n + \frac{n}{2} 3^{n-1} - \frac{7n}{2}$
19. $y_x = C_1 2^x + C_2 3^x + \frac{1}{4}(2x^2 + 8x + 15)$
20. $u_x = 3x - 4$
21. $u_x = C_1 + \frac{\cos(x-2) - \cos(x-1)}{2(1-\cos 1)}$
22. $u_x = C_1 4^x + C_2 3^x + \frac{\cos(x-2) - 7\cos(x-1) + 12\cos x}{24\cos 2 - 182\cos 1 + 194}$
23. $u_n = C_1 8^n + C_2(-1)^n - \frac{2^{n-1}}{9}\left(n^2 - \frac{2n}{3} + \frac{1}{3}\right)$
24. $u_x = C_1 + C_2 x + 2^x(x^2 - 8x + 20)$
25. $u_n = C_1(-2)^n + C_2\left(-\frac{1}{2}\right)^n + \frac{2n}{20} + \frac{1}{9}\left(n^2 - 2n + \frac{5}{9}\right)$

Atmiya University Rajkot

EXERCISE 11.1

1. Using first four terms of the Maclaurin's series find y at $x = 0.1(0.1)(0.6)$ given that $2y' = (1 + x)\, y^2$, $y(0) = 1$. Compare the values with the exact solution.
2. Find the first six terms of the power series solution of $y' = \sin x + y^2$ which passes through the point $(0, 1)$.
3. Given $y' = 3x + \frac{y}{2}$ and $y(0) = 1$, find by Taylor's series $y(0.1)$ and $y(0.2)$.
4. Using Taylor's series method solve $y' = xy + y^2$, $y(0) = 1$ at $x = 0.1, 0.2, 0.3$.
5. Solve by Taylor's series method of third order, the problem $y' = (x^3 + xy^2)\, e^{-x}$, $y(0) = 1$ to find y for $x = 0.1, 0.2, 0.3$.

Atmiya University Rajkot

6. Employ Taylor's method to obtain the approximate value of y at $x = 0.2$ for $y' = 2y + 3e^x$, $y(0) = 0$. Compare the numerical solution obtained with exact solution.

7. Solve $y' = y^2 + x$, $y(0) = 1$ using Taylor's series method to compute $y(0.1)$ and $y(0.2)$.

8. Solve $\frac{dy}{dx} = z - x$, $\frac{dz}{dx} = y + x$ with $y(0) = 1$, $z(0) = 1$ to get $y(0.1)$ and $z(0.1)$, using Taylor's method.

9. Given $\frac{dx}{dt} - ty - 1 = 0$ and $\frac{dy}{dt} + tx = 0$, $t = 0$, $x = 0$, $y = 1$, evaluate $x(0.1)$, $y(0.1)$, $x(0.2)$ and $y(0.2)$.

10. Using Taylor's series method, obtain the values of y at $x = (0.1)(0.1)$ 0.3 to four significant figures if y satisfies the equation $\frac{d^2y}{dx^2} + xy = 0$ given that $\frac{dy}{dx} = \frac{1}{2}$ and $y = 1$ when $x = 0$.

11. Evaluate the integral of the following problem to four significant figures at $x = 1.1(0.1)\ 1.3$ using Taylor's series expansion.

$$\frac{d^2y}{dx^2} + y^2\frac{dy}{dx} - x^3 = 0; \left.\frac{dy}{dx}\right]_{x=1} = 1; \; y(1) = 1$$

12. Using Picard's method find $y(0.2)$ given that $y' = x - y$; $y(0) = 1$.

13. Using Picard's method obtain a solution upto the fifth approximation to the equation $y' = y + x$, such that $y(0) = 1$. Check your answer by finding the exact particular solution. Also find $y(0.1)$ and $y(0.2)$.

14. Using Picard's method find $y(0.2)$ and $y(0.4)$ given that $y' = 1 + y^2$ and $y(0) = 0$.

15. Use Picard's method to approximate the value of y when $x = 0.1$ given that $y(0) = 1$ and $y' = 3x + y^2$.

16. Using Picard's method find the approximate values of y and z corresponding to $x = 0.1$ given that $y(0) = 2$, $z(0) = 1$ and $\frac{dy}{dx} = x + z$, $\frac{dz}{dx} = x - y^2$.

17. Using Picards method obtain the second approximation to the solution to $y'' - x^3y' - x^3y = 0$ so that $y(0) = 1$, $y'(0) = 0.5$.

Atmiya University Rajkot

ANSWERS

1.

x	0	0.1	0.2	0.3	0.4	0.5	0.6
Approx. value of y	1	1.055375	1.123	1.205125	1.304	1.421875	1.561
Exact value of y	1	1.055	1.124	1.209	1.316	1.455	1.64

2. $y = 1 + x + \frac{3x^2}{2} + \frac{4x^3}{3} + \frac{11x^4}{8} + \frac{23x^5}{15} + \cdots$

3. $y(0.1) = 1.0665$; $y(0.2) = 1.167196$

4. $y(0.1) = 1.1167$, $y(0.2) = 1.2767$, $y(0.3) = 1.5023$

5. $y(0.1) = 1.0047$, $y(0.2) = 1.01812$, $y(0.3) = 1.03995$

6. $y(0.2) = 0.811$, exact value of $y(0.2) = 0.8112$

7. $y(0.1) = 1.1164$, $y(0.2) = 1.2725$

8. $y(0.1) = 1.1003$, $z(0.1) = 1.1102$

9. $x(0.1) = 0.105$, $y(0.1) = 0.9997$
   $x(0.2) = 0.21998$, $y(0.2) = 0.9972$

10. $y(0.1) = 1.050$, $y(0.2) = 1.099$, $y(0.3) = 1.145$

11. $y(1.1) = 1.100$, $y(0.2) = 1.201$, $y(0.3) = 1.306$

12. $y(0.2) = 0.837$

13. $y(0.1) = 1.1103$; $y(0.2) = 1.2428$

14. $y(0.2) = 0.2027$, $y(0.4) = 0.4227$

15. $y(0.1) = 1.127$

16. $y(0.1) = 2.0845$; $z(0.1) = 0.5867$

17. $y_2 = 1 + \frac{1}{2}x + \frac{3}{40}x^5$

11.10 EULER'S METHOD

Consider the differential equation

$$\frac{dy}{dx} = f(x, y) \qquad (11.32)$$

where $y(x_0) = y_0$

Suppose that we wish to find successively $y_1, y_2, \ldots, y_m$, where y_m is the value of y corresponding to $x = x_m$, where $x_m = x_0 + mh$, $m = 1, 2, \ldots, h$ being small. Here, we use the property that in a small interval, a curve is

Tumiya University Tajikistan

EXERCISE 11.2

1. Use Euler's method and Improved Euler's method to approximate y when $x = 0.1$, given that

   $\frac{dy}{dx} = \frac{y-x}{y+x}$, $y(0) = 1$ taking $h = 0.2$.

2. Solve $y' = 3x^2 + y$ in $0 \le x \le 1$ by Euler's method taking $h = 0.1$ given that $y(0) = 4$.

3. Solve $y' = x + y$, $y(0)$ choosing the step length 0.2 for $y(1.2)$ by Euler's method.

4. Using Euler's method solve $y' = x + y$ in $0 \le x \le 1$ with $h = 0.1$, if $y(0) = 1$. Find the exact value of y at $x = 1$, using analytical method.

5. Using Euler's method find $y(0.6)$ of $y' = 1 - 2xy$, given that $y(0) = 0$ taking $h = 0.2$.

6. Solve $y' = -y$; $y(0) = 1$ by (i) Euler's method for $y(0.04)$ and (ii) Modified Euler's method for $y(0.6)$.

7. Solve $y' = x + y + xy$, $y(0) = 1$ for $y(0.1)$ taking $h = 0.025$, using Euler's method.

8. Given that $y' = \log(x + y)$ with $y(0) = 1$. Use (i) Improved Euler's method to find $y(0.2)$, $y(0.5)$, (ii) Modified Euler's method to find $y(0.2)$.

Atmiya University Rajkot

9. Use Euler's method and its Modified form to obtain $y(0.2)$, $y(0.4)$ and $y(0.6)$ correct to three decimal places given that $y' = y - x^2$, $y(0) = 1$.

10. Use Euler's modified method to get $y(0.25)$ given that $y' = 2xy$, $y(0) = 1$.

11. Using Improved Euler's method, solve

$y' = x + |\sqrt{y}|$, $y(0) = 1$ in the range $0 \le x \le 0.6$ taking $h = 0.2$.

12. Given that $y' = 2 + \sqrt{(xy)}$ and $y(1) = 1$. Find $y(2)$ in steps of 0.2 using Improved Euler's method.

13. Given $y^{(1)} = x^2 + y^2$, $y(0) = 1$, determine $y(0.1)$ and $y(0.2)$ by Modified Euler's method.

14. Solve $y^{(1)} = y + e^x$, $y(0) = 0$ for $y(0.2)$, $y(0.4)$ by Improved Euler's method.

15. Solve $y^{(1)} = y + x^2$, $y(0) = 1$ for $y(0.02)$, $y(0.04)$ and $y(0.06)$ using Euler's Modified method.

ANSWERS

1. 1.0928, 1.0932
2. 4.4, 4.843, 5.3393, 5.90023, 6.538253, 7.2670783, 8.1017861, 9.0589647, 9.1039647, 10.257361
3. 1.1831808
4. 1.1, 1.22, 1.362, 1.5282, 1.7210, 1.9431, 2.1974, 2.4871, 2.8158, 3.1873 ; exact solution = 3.4366
5. 0.4748
6. 0.9603 ; 0.551368
7. 1.1448
8. 1.0082, 1.0490 ; 1.0095
9. 1.2, 1.432, 1.686 ; 1.218, 1.467, 1.737
10. 1.0625
11. 1.2309, 1.5253, 1.8851
12. 5.051
13. 1.1105, 1.25026
14. 0.24214, 0.59116
15. 1.0202, 1.0408, 1.0619

11.13 RUNGE'S METHOD

Let the differential equation be

$$\frac{dy}{dx} = f(x, y), y(x_0) = y_0$$

Atmiya University Rajkot

EXERCISE 11.3

1. Solve $y' = x - y$ given that $y = 0.4$ at $x = 1$ for $y(1.6)$ using Runge's method.
2. Using Runge's method, find y at $x = 1.1$ given

   $\frac{dy}{dx} = 3x + y^2$, $y(1) = 1.2$
3. Evaluate $y(0.8)$ using Runge's method given

   $y' = \sqrt{x + y}$; $y = 0.41$ at $x = 0.4$
4. Using second order Runge–Kutta method, find y at $x = 0.1$, 0.2 and 0.3 given $2y' = (1 + x)y^2$; $y(0) = 1$.
5. Find $y(1.2)$ by Runge–Kutta method of fourth order given $y' = x^2 + y^2$; $y(1) = 1.5$. Take $h = 0.1$.
6. If $\frac{dy}{dx} = \frac{2xy + e^x}{x^2 + xe^x}$; $y(1) = 0$, solve for y at $x = 1.2$, 1.4 using Runge–Kutta method of fourth order.
7. Using Runge–Kutta method of fourth order, find y at $x = 1.1$, 1.2 given that

   $2y' = 2x^3 + y$; $y(1) = 2$.

Atmiya University Rajkot

8. Find y at $x = 0.1, 0.2$ using fourth order Runge–Kutta algorithm given that

   $y' - yx^2 = 0$; $y(0) = 1$.

9. Use Runge–Kutta method to evaluate y at $x = 0.2, 0.4, 0.6$ given that

   $\frac{dy}{dx} - xy = 1$; $y(0) = 2$.

10. Using Runge–Kutta method of fourth order, find $y(0.1)$, $y(0.2)$ given that

    $\frac{dy}{dx} - y = -x$; $y(0) = 2$.

11. Solve $10y' = x^2 + y^2$, $y(0) = 1$ to evaluate $y(0.2)$ and $y(0.4)$ by fourth order R–K algorithm.

12. Given $\frac{dy}{dx} = \frac{y^2 - x^2}{y^2 + x^2}$; $x_0 = 0$, $y_0 = 1$, $h = 0.2$, find y_1 and y_2 using Runge–Kutta method.

13. Solve $\frac{dy}{dx} = \frac{1}{x + y}$ for $x = 0.5$ to z using R–K method with $x_0 = 0$, $y_0 = 1$ (take $h = 0.5$).

14. Use Runge–Kutta method of order four to find y at $x = 0.1, 0.2$ given that

    $x(dy + dx) = y(dx - dy)$; $y(0) = 1$.

15. Solve $y' = x + y$, $y(0) = 1$ to find y at $x = 0.1, 0.2, 0.3$ using R–K method.

16. Solve the following for $y(0.1)$, $y(0.2)$ using Runge–Kutta algorithms of (i) second order, (ii) third order and (iii) fourth order.

    (a) $\frac{dy}{dx} + y = 0$; $y(0) = 1$

    (b) $\frac{dy}{dx} + 2y = x$; $y(0) = 1$

17. Use second order Runge–Kutta algorithm to solve $\frac{dy}{dx} + xz = 0$; $\frac{dy}{dx} - y^2 = 0$ at $x = 0.2, 0.4$ given that $y = 1$, $z = 1$ at $x = 0$.

18. Solve $\frac{dy}{dx} = 1 + xz$, $\frac{dz}{dx} = -xy$ for $x = 0.3, 0.6, 0.9$ given that $y = 0$, $z = 1$ at $x = 0$ by R–K method.

Atmiya University Rajkot

ATMIYA UNIVERSITY, Rajkot
Faculty of Science
Department of Mathematics

Question Bank
Academic Year: 2023-24

Program: **M.Sc. Mathematics**	Semester: III
Course Code: **21MMTDC301**	Course: Financial Mathematics

Part A

1. Define the term market.
2. What do you understand by term financial derivatives.
3. What do you mean by the word "option"?
4. Define rho.
5. What is interest rate?
6. Define asset price.
7. Define holder and writer.
8. What do you mean by asset price?
9. Define random walk.
10. Diffusion equation is a ..... type of partial differential equation.
11. What do you mean by term dividend?

Part B

12. State minimum three difference between call and put options.
13. Explain the term "Bid-ask" or "Bid-offer."
14. How much one should pay now to receive a guaranteed amount 'E' at the future time T?
15. Write extension of Ito's lemma if $F = F(s,t)$.
16. Explain in detail the elimination and randomness.
17. Explain the situation of call option and put option at $t = T$?
18. Write and explain the boundary conditions of Black-Scholes equation for put option.
19. Discuss the possibilities of Black Scholes equation if we apply the concept of arbitrage and supply demand.
20. Discuss the significance of Black Scholes equation.
21. Explain the call option with one dividend payment.
22. Explain call option with an example.
23. Explain put option with an example.

24. Raj holds an option to purchase a lot of 50 shares of ABC company at Rs. 400. After 1 year the price of the share becomes Rs. 300 and the cost of an option or upfront premium is Rs. 200 per share then will Raj exercise the option? Why?
25. Write and explain key elements of option theory.
26. What is the present value of $1,000 received in two years if the interest rate is 12% per year discounted daily.
27. Explain in detail the forward contract.
28. Ms. Nosheen puts Rs. 10,000 in a savings account today, that pays 5% compounded annually. How much will she have in her account after ten years?
29. Explain in detail the future contract.

Part C

30. Write types of financial markets and their dealings.
31. Why would anyone write the option?
32. Explain simple model of asset price.
33. Explain discrete dividend structure and derive the jump condition for the same.
34. Explain in detail the concepts of basic option theory in financial market.
35. Explain, why would anyone write the option?
36. Find stochastic differential equation for the following functions:
    (i) $F(s) = \log s$
    (ii) $\mathrm{F(s)} = \mathrm{As}$
    (iii) $\mathrm{F(s)} = s^n$.
40. What is put-call parity?
41. State the assumptions of the Black Scholes model.
42. Derive Black Scholes partial differential equation.
43. Derive boundary and final conditions for European option.
44. Defined the dividend yield and explain the constant dividend yield structure. Also derive Black Scholes partial differential equation corresponding to constant dividend yield structure.

Manika

Semester-IV

→ Question Book ATNT ←

(Advanced Topics in Number Theory)

code : 21MMTCC401

Here are some practice problems in number theory. They are, very roughly, in increasing order of difficulty.

1. (a) Show that $n^7 - n$ is divisible by 42 for every positive integer n.
   (b) Show that every prime not equal to 2 or 5 divides infinitely many of the numbers 1, 11, 111, 1111, etc.
2. Show that if $p > 3$ is a prime, then $p^2 \equiv 1 \pmod{24}$.
3. How many zeros are at the end of 1000!?
4. If p and $p^2 + 2$ are primes, show that $p^3 + 2$ is prime.
5. Show that $\gcd(2^a - 1, 2^b - 1) = 2^{\gcd(a,b)} - 1$ for positive integers a, b.
6. Suppose that a, b, c are distinct integers and that $p(x)$ is a polynomial with integer coefficients. Show that it is not possible to have $p(a) = b$, $p(b) = c$, $p(c) = a$.
7. A triangular number is a positive integer of the form $n(n + 1)/2$. Show that m is a sum of two triangular numbers iff $4m + 1$ is a sum of two squares. (A-1, Putnam 1975)
8. For positive integers n define $d(n) = n - m^2$, where m is the greatest integer with $m^2 \leq n$. Given a positive integer b_0, define a sequence b_i by taking $b_{k+1} = b_k + d(b_k)$. For what b_0 do we have b_i constant for sufficiently large i? (B-1, Putnam 1991)
9. d, e and f each have nine digits when written in base 10. Each of the nine numbers formed from d by replacing one of its digits by the corresponding digit of e is divisible by 7. Similarly, each of the nine numbers formed from e by replacing one of its digits by the corresponding digit of f is divisible by 7. Show that each of the nine differences between corresponding digits of d and f is divisible by 7. (A-3, Putnam 1993)
10. Define the sequence of decimal integers a_n as follows: $a_1 = 0$; $a_2 = 1$; a_{n+2} is obtained by writing the digits of a_{n+1} immediately followed by those of a_n. When is a_n a multiple of 11? (A-4, Putnam 1998)
11. Suppose $n > 1$ is an integer. Show that $n^4 + 4^n$ is not prime.
12. (a) Let α and β be irrational numbers such that $1/\alpha + 1/\beta = 1$. Then the sequences $f(n) = \lfloor \alpha n \rfloor$ and $g(n) = \lfloor \beta n \rfloor$, $n = 1, 2, 3, \ldots$ are disjoint and their union is the set of positive integers. (A classic due to Beatty; variations of this appear again and again.)
    (b) Show the following converse: if α, β are positive reals such that the sequences $f(n) = \lfloor \alpha n \rfloor$ and $g(n) = \lfloor \beta n \rfloor$, $n = 1, 2, 3, \ldots$ are disjoint and their union is the set of positive integers, then α, β are irrational and $1/\alpha + 1/\beta = 1$.

Atmiya University Rajkot

13. If p is a prime number greater than 3 and $k = \lfloor 2p/3 \rfloor$, prove that the sum

$$\binom{p}{1} + \binom{p}{2} + \cdots \binom{p}{k}$$

of binomial coefficients is divisible by p^2. (A-5, Putnam 1996)

14. Find all positive integers a, b, m, n with m relatively prime to n such that $(a^2 + b^2)^m = (ab)^n$. (A-3, Putnam 1992)

15. Suppose the positive integers x, y satisfy $2x^2 + x = 3y^2 + y$. Show that $x - y$, $2x + 2y + 1$, $3x + 3y + 1$ are all perfect squares.

16. Find all solutions of $x^{n+1} - (x+1)^n = 2001$ in positive integers x and n. (A-5, Putnam 2001)

Atmiya University Rajkot

ATMIYA UNIVERSITY
(Established under the Gujarat Private University Act 11, 2018)
Yogidham Gurukul, Kalawad Road, Rajkot - 360005, Gujarat (INDIA)

Science
Mathematics

Assignment No: AU-FoS-DepSLECode-Sem4-Course Code-21MMTDC401

DSE Core 1: Differential Geometry
Question Bank
PG-Semester IV-Student

(1) Define: The tangent vector field

(2) Give an example of a regular curve.

(3) The Frenet-serret apparatus of the unit speed curve $\alpha(s)$ is _____.

(4) Define: Unit speed curve

(5) Reparameterize the curve $\alpha(u) = (acosu, asinu, cu)$, where $0 \leq u \leq \pi$ by $t = \tan\frac{u}{2}$.

(6) Check whether the curve $\alpha(\theta) = (cos\theta, \cos^2\theta, sin\theta)$ regular or not. If it is regular then find the tangent at $\theta = \frac{\pi}{4}$.

(7) If $g: [c, d] \to [a, b]$ is a reparameterization of a curve segment $\alpha: [a, b] \to R^3$ then prove that the length of α is equal to the length of $\beta = \alpha \cdot g$.

(8) Show that $\alpha(t) = (sin3tcost, sin3tsint, 0)$ is a regular curve. Also find the equation of tangent line to αat $t = \frac{\pi}{3}$.

(9) Prove that for fixed vectors u and $v$in R^3, the curve $\alpha: R \to R^3$ defined by $\alpha(t) = u + tv$ is a straight line.

(10) If $\alpha(s)$ be unit speed curve with $K(s) \neq 0$, then prove that $\alpha(s)$ lies on a plane if all the osculating planes are parallel.

(11) Define the tangent plane and tangent vector to a simple surface.

(12) Show that the Monge Patch is a simple surface.

(13) Define the following terms:
The Principal normal vector
The Curvature
The Bi-normal vector
The Torsion

(14) If $g: [c, d] \to [a, b]$ is a reparameterization of a curve segment $\alpha: [a, b] \to R^3$ then prove that the length of α is equal to the length of $\beta = \alpha \cdot g$.

(15) Show that the Monge Patch is a simple surface.

(16) Obtain the first fundamental forms corresponding to $x(u, v) = (u^2, uv, v^2)$, where $u, v > 0$.

Dr. Neha D. Borad
Dept of Mathematics,
Atmiya University

Atmiya University Rajkot

ATMIYA UNIVERSITY, Rajkot
Faculty of Science
Department of Mathematics

Question Bank
Academic Year: 2023-24

Program: **M.Sc. Mathematics**	Semester: IV
Course Code: **21MMTCC404**	Course: **Mathematical Statistics**

Part A

1. Define marginal distribution function.
2. Write two properties of distribution function.
3. What is the rth moment about origin for Bernoulli distribution?
4. For Binomial distribution with $p = \frac{1}{4}$ and $n = 10$. Find variance.
5. Give an example of cycle of length 5.
6. Define Bayes theorem.
7. Write probability mass function for binomial distribution.
8. Define probability density function of gamma distribution.
9. What do you mean by standard error.
10. Define degree of freedom.

Part B

11. Find μ and μ_2' for the random variable X whose probability density function is $f(x) = \begin{cases} \frac{x}{2} & \text{for } 0 < x < 2 \\ 0 & \text{otherwise} \end{cases}$.
12. Verify the function $F(x)$ is a distribution function, defined as $F(x) = \begin{cases} 0 & \text{for } x < 0 \\ 1 - e^{-\frac{x}{4}} & \text{for } x \geq 0 \end{cases}$. Also, find the probability $P(X \leq 4)$ and $P(X \geq 8)$.
13. The odd against A speaking the truth are 4: 6, while the odds in favour of B speaking the truth are 7: 3. What is the probability that A and B contradict each other in stating the same fact?
14. A and B plays a game in which their chances of winning are in the ratio 3: 2. Find A's chance of winning at least three games out of the five games played.
15. An unbiased dice is thrown until 6 appears. What is the probability that it must be thrown more than 5 times?
16. Derive formula of mean and variance for the Binomial distribution.

Atmiya University Rajkot

17 Define the following terms:
(i) Mutually exclusive
(ii) Independent events
(iii) Conditional probability
(iv) Cumulative distribution function.

18 Mean and standard deviation of a random variable X are 5 and 4, respectively. Find $E(X^2)$ and standard deviation of $5 - 3X$.

19 Find mean and variance of Bernoulli's distribution.

20 Probability of hitting a target in any attempt is 0.6. What is the probability that it would hit on fifth attempt?

21 Find mean and moment generating function for uniform distribution.

22 Show that for the exponential distribution $f(x) = Ae^{-x}, 0 \leq x < 8$ mean and variance are equal.

23 Write steps for the test of significance.

24 In two sample of women from Punjab and Tamil Nadu, the mean height of 1000 and 2000 women are 67.6 and 68.0 inches, respectively. If population standard deviation of Punjab and Tamil Nadu are same and equal to 5.5 inches, then can the mean height of Punjab and Tamil Nadu women be regarded as same at 1% level of significance?

25 In a village 'A' out of random sample of 1000 persons 100 were found to be vegetarians. While in another village 'B' out of 1500 persons 180 were found to be vegetarians. Do you think a significant difference in the food habits of the people of the two village? ($\alpha = 0.01$)

26 A man buys 50 electric bulbs of Philips and 50 electric bulbs of HMT. He finds that Philips bulb give an average life of 1500hrs with a population standard deviation of 60hrs and HMT bulbs give an average life of 1512hrs with a standard deviation of 80hrs. Is there any significant difference between the mean life of two types of bulbs?

27 Suppose that a pair of fair dice are to be tossed, and let the random variable X denote the sum of the points. Obtain the probability distribution for X.

28 Find the probability distribution of boys and girls in families with 3 children, assuming equal probabilities for boys and girls.

29 Find the distribution function $F(x)$ for the random variable X of Problem 1.

30 Find the distribution function $F(x)$ for the random variable X of Problem 2.

31 A random variable X has the density function $f(x) = \frac{c}{(x^2+1)}$, where $-\infty < x < \infty$. (a) Find the value of the constant c. (b) Find the probability that X^2 lies between $1/3$ and 1.

32 The joint probability function of two discrete random variables X and Y is given by $f(x, y) = c(2x + y)$, where x and y can assume all integers such that $0 \leq x \leq 2, 0 \leq y \leq 3$, and $f(x, y) = 0$ otherwise.
(a) Find the value of the constant c. (c) Find $P(X \geq 1, Y \leq 2)$.
(b) Find $P(X = 2, Y = 1)$.

33 Find the marginal probability functions (a) of X and (b) of Y for the random variables of Problem 6.

34 Show that the random variables X and Y of Problem 6 are dependent.

Atmiya University Rajkot

35 Find the expectation of a discrete random variable X whose probability function is given by

$$f(x) = \left(\frac{1}{2}\right)^x, (x = 1,2,3, \dots)$$

36 Find (a) the variance, (b) the standard deviation of the sum obtained in tossing a pair of fair dice.

37 The random variable X can assume the values 1 and -1 with probability $1/2$ each. Find (a) the moment generating function, (b) the first four moments about the origin.

38 Find the first two moments (a) about the origin, (b) about the mean, for a random variable X having density function

$$f(x) = \begin{cases} \frac{4x(9-x^2)}{81} & 0 \le x \le 3 \\ 0, & \text{otherwise} \end{cases}$$

39 If 3% of the electric bulbs manufactured by a company are defective, find the probability that in a sample of
100 bulbs, (a) 0, (b) 1, (c) 2, (d) 3, (e) 4, (f) 5 bulbs will be defective.

40 Let X be uniformly distributed in $-2 \le x \le 2$ Find (a) $P(X < 1)$, (b) $P(|X-1| \ge \frac{1}{2})$.

Part C

41 The contents of urn I, II and III are as follows:
Urn I: 1 white, 2 red and 3 black balls,
Urn II: 2 white, 3red and 1 black balls,
Urn III: 3 white, 1 red and 2 black balls.
One urn is chosen at random and two balls are drawn, they happen to be white and red. Find the probability that they are from
(i) Urn I (ii) Urn II (iii) Urn III.

42 Define moment generating function and find moment generating function of the given random variable X whose probability density function is $f(x) = \begin{cases} e^{-x}, \text{for } x > 0 \\ 0, \text{otherwise} \end{cases}$. Also find the expression for μ_r'.

43 Derive mean and moment generating function for negative binomial distribution.

44 (i) What is the probability that 5th head obtained in 8th toss?
(ii) Comment on the following: The mean and variance of geometric distribution are 4 and 3, respectively.

45 Define probability function of normal distribution. If X is normally distributed with a mean of 2 and standard deviation 0.1, find $P(|X-2| \ge 0.01)$? (use $P(z = 0.1) = 0.0398$)

46 The amount of time, in minutes, that a person must wait for a bus is uniformly between 0 and 15 min.
(a) What is the probability that a person waits fewer than 12.5 minutes?
(b) On the average, how must a person wait? Find mean and standard deviation.

Atmiya University Rajkot

(c) 90% of the time, a person must wait falls below what value?

47 Write properties and applications of t-distribution.

48 The manufacturer of a certain type of bulbs claims that these bulbs have a mean of 25 months. A random sample of 6 such bulbs gave the following values: 24, 26, 30, 20, 20, 18. Can you regard that claim of manufacturer is valid at 1% level of significance and also verify the result with p-value.

49 Explain Chi-square distribution with its uses.

50 The sales of data of an item in six shops before and after a special promotional campaign are as under:

Shops	A	B	C	D	E	F
Before campaign	53	28	31	48	50	42
After campaign	58	29	30	55	56	45

Did the campaign male any significant difference in sale at 5% significant level?

51 The cumulative distribution function of a continuous random variable X is given by $F(x) = \begin{cases} 0 & \text{for } x < 0 \\ x^2 & \text{for } 0 \le x \le 1 \\ 1 & \text{for } x > 1 \end{cases}$. Find probability density function and $P\left(\frac{1}{2} \le X \le \frac{4}{5}\right)$.

52 State and prove Bayes theorem.

53 Derive formula of mean and moment generating function for geometric distribution.

54 (i) What is the probability that 5th head obtained in 8th toss?

(ii) If mean of the Poisson distribution is 4 then find $P(\lambda - 2\sigma < X < \lambda + 2\sigma)$.

55 The manufacturer of a patent medicine claimed that it was 90% effective in relieving an allergy for a period of 8 hours. In a sample of 200 people who had the allergy, the medicine provided relief for 160 people.

(a) Determine whether the manufacturer's claim is legitimate by using 0.01 as the level of significance.

(b) Find the P value of the test.

56 The mean lifetime of a sample of 100 fluorescent light bulbs produced by a company is computed to be 1570 hours with a standard deviation of 120 hours. If μ is the mean lifetime of all the bulbs produced by the company, test the hypothesis μ=1600 hours against the alternative hypothesis $\mu \neq 1600$ hours, using a level of significance of (a) 0.05 and (b) 0.01. (c) Find the P value of the test.

57 An examination was given to two classes consisting of 40 and 50 students, respectively. In the first class the mean grade was 74 with a standard deviation of 8, while in the second class the mean grade was 78 with a standard deviation of 7. Is there a significant difference between the performance of the two classes at a level of significance of (a) 0.05, (b) 0.01? (c) What is the P value of the test?

58 The mean height of 50 male students who showed above-average participation in college athletics was 68.2 inches with a standard deviation of 2.5 inches, while 50 male students who showed no interest in such participation had a mean height of 67.5 inches with a standard deviation of 2.8 inches. (a) Test the hypothesis that male students who

Atmiya University Rajkot

participate in college athletics are taller than other male students. (b) What is the P value of the test?

59 Two groups, A and B, each consist of 100 people who have a disease. A serum is given to Group A but not to Group B (which is called the *control group*); otherwise, the two groups are treated identically. It is found that in Groups A and B, 75 and 65 people, respectively, recover from the disease. Test the hypothesis that the serum helps to cure the disease using a level of significance of (a) 0.01, (b) 0.05, (c) 0.10. (d) Find the P value of the test.

60 A sample poll of 300 voters from district A and 200 voters from district B showed that 56% and 48%, respectively, were in favor of a given candidate. At a level of significance of 0.05, test the hypothesis that (a) there is a difference between the districts, (b) the candidate is preferred in district A. (c) Find the respective P values of the test.

61 A test of the breaking strengths of 6 ropes manufactured by a company showed a mean breaking strength of 7750 lb and a standard deviation of 145 lb, whereas the manufacturer claimed a mean breaking strength of 8000 lb. Can we support the manufacturer's claim at a level of significance of (a) 0.05, (b) 0.01? (c) What is the P value of the test?

Atmiya University
Rajkot

ATMIYA UNIVERSITY
(Established under the Gujarat Private University Act 11, 2018)
Yogidham Gurukul, Kalawad Road, Rajkot - 360005, Gujarat

Faculty of Science

Department of Mathematics

Question Bank No: AU-FoS-Mathematics-Complex Analysis-21MMTCC301

Question Bank
M.Sc. Mathematics-Semester 3

---

1 marks:

1. The derivative of branch of logarithm function $f(z)$ is …
2. What is the equation $|z - i| = 5$ represents?
3. Let $G \subset C$ be open and $f: G \to C$ be continuously differentiable with primitive $F: G \to C$ and $\gamma: [a, b] \to C$ be rectifiable path. If γ is closed curve then $\int_\gamma f$=…
4. $\exp\left(\frac{1}{z}\right)$ has ….. singularity at $z = 0$.
5. The number of roots of the equation $z^5 + 3z^2 + 1 = 0$ in $1 < |z| < 2$ is
6. For a complex number z, $z^2=(\bar{z})^2$ if and only if z is ……
7. Let $\gamma: [a, b] \to C$ be a bounded function. What is the relation between $v(\gamma: P)$ and $v(\gamma: Q)$ if P and Q are partitions of $[a, b]$ such that $P \subset Q$?
8. Let $f: G \subset C \to C$ be continuous with primitive $F: G \to C$ and $\gamma: [a, b] \to C$ be a rectifiable curve. Then $\int_\gamma f$=……..
9. Define removable singularity of a function $f(z)$.
10. $Res\left(\sin\left(\frac{1}{z}\right), 0\right)$=…

5 Marks/ 7 marks

1. Define branch of a logarithm.

   Prove the following statement: If $G \subset C$ is open and connected and, f is a branch of $\log z$ on G then, the totality of branches of $\log z$ are the functions $f(z) + i2k\pi$; $k \in Z$.

2. What do you mean by domain of a complex function?

   Describe the domain of the functions:

(i) $f(z) = \frac{1}{z^2+1}$

(ii) $f(z) = \frac{z}{z+\bar{z}}$

3. Prove that every non decreasing function $\gamma: [a, b] \to C$ is a function of bounded variation.

4. Let $\gamma: [a, b] \to C$ defined by $\gamma(t) = tb + (1-t)a; 0 \leq t \leq 1$ and $f(z) = z^n$

   (i) Is γ smooth?

   (ii) Evaluate $\int_\gamma z^n \, dz$

5. State and prove maximum modulus theorem.

6. Show that $\int_0^{2\pi} \frac{e^{iS}}{e^{iS}-z} \, dS = 2\pi; \forall z \in C, |z| < 1$

7. Write the principal part of the functions given at its isolated singular point and determine whether that point is a pole, a removable singular point or an essential singular point.

   (i) $\frac{z^2}{1+z}$

   (ii) $z.\exp \frac{1}{z}$

8. If f has an isolated singularity at a then, the point $z = a$ is a removable singularity if and only if $\lim_{z \to a}(z-a)f(z) = 0$

9. If f has a pole of order n at z_0 then, prove that $Res(f(z), z_0) = \frac{1}{(n-1)!}\frac{d^{n-1}}{dz^{n-1}}(z-z_0)^n f(z)$

10. Evaluate:

    (i) $Res\left(\frac{1-e^{2z}}{z^4}, poles\right)$

    (ii) $Res\left(\frac{1}{z(e^z-1)}, 0\right)$

11. Discuss the mapping $w = z^2$

12. State and prove Cauchy Riemann conditions for a function to be analytic in polar coordinates.

13. Explain Riemann Stetljes integral

14. Show, by an example, every path need not be a rectifiable path

15. State and prove Cauchy's integral formula first version

16. State and prove Cauchy Goursat Theorem

17. Describe the Laurent series development of the function $f(z)$ in the $ann(a, R_1, R_2)$ as $f(z) = \sum_{n=-\infty}^{\infty} a_n(z-a)^n$

18. Classify the types of singularities using Laurent's series

19. State and prove Cauchy Residue Theorem

20. Evaluate:

Amiya Un... Rajko...

(i) $\int_{|z|=2} \tan z \, dz$

(ii) $\int_{|z|=2} \frac{e^{-z}}{(z-1)^2} dz$

(iii) $\int_{|z+2|=3} \frac{dz}{z^3(z+4)}$

21 Find the cube root of unity.

22 Obtain Cauchy Riemann conditions in Cartesian coordinates for the analytic function $f(z) = u + iv$.

23 State and prove "Fundamental Theorem of Algebra".

24 Use Leibniz rule to evaluate $\int_0^{2\pi} \frac{e^{is}}{e^{is}-z} ds, \forall z \in C, |z| < 1$.

25 Which subset of the unit sphere S correspond to the real and imaginary axes in C ?

26 State and prove the Fundamental Theorem of Calculus for line integral.

27 Derive the formula for finding the residue of $f(z)$ at $z = z_0$ when the order of the pole is m.

28 State and prove Cauchy's Residue Theorem.

29 Apply Rouche's theorem to find the number of roots of the equation $z^8 + 3z^3 + 7z + 5 = 0$ in the first quadrant.

30 Prove the statement: If f has a pole of order n at z_0, then $Res(f(z), z_0)$ $= \frac{1}{(n-1)!} \frac{d^{n-1}}{dz^{n-1}} ((z - z_0)^n . f(z))$

31 Discuss the mapping $w = z^n$.

32 Give an example of a path which is not rectifiable.

33 Explain Riemann Steieltjes integral.

34 State and prove Morera's theorem.

35 State and prove: "Cauchy's integral formula", the first version.

36 Evaluate $\int_0^{2\pi} \frac{d\theta}{2+\cos\theta}$ using Cauchy's residue theorem.

37 Classify and explain the isolated singularities using Laurent's series.

38 Show that $\int_0^{\infty} \frac{dx}{x^4+a^4}; a > 0$. (Use Cauchy's residue theorem)

39 Classify the types of singularities at z_0 in detail, with the help of Laurent's series in $ann(z_0; 0, R)$ for the function $f(z) = \sum_{-\infty}^{\infty} a_n (z - z_0)^n$.

40 Using Cauchy's Residue Theorem, evaluate $\int_{|z|=4} \frac{3z^2+2}{(z-1)(z^2+9)} dz$

41. Obtain all the solutions of the equation $w = e^z$

42. If S is a mobius transformation then prove that S is the composition of translations, dilations and the inversion.

Amiya University Rajkot

43. Let $\gamma: [a,b] \to C$ be of bounded variation. If P and Q are partitions of $[a,b]$ and $P \subset Q$ then show that $v(\gamma, P) \leq v(\gamma, Q)$

44. Prove by Leibnitz's rule, $\int_0^{2\pi} \frac{e^{is}}{e^{is}-z}\, ds = 2\pi, \ \forall z \in C, \ |z| = 1$

45. Evaluate $\int \frac{\log z}{z^n}\, dz; \ \gamma(t) = 1 + \frac{1}{2}e^{it}; \ 0 \leq t \leq 2\pi$

46. State and prove Fundamental theorem of Algebra

47. Prove: If f has an isolated singularity at z_0 then the point z_0 is a removable singularity if and only if $\lim_{z \to z_0} (z - z_0) f(z) = 0$

48. Prove that a rational function has no singularities other than poles.

49. Using Cauchy Residue Theorem evaluate $\int_{|z-1|=1} \frac{2z^2+z}{z^2-1}\, dz$

50. Show that the roots of $16z^2 - z + 8 = 0$ all lie in the annulus between $|z| = \frac{1}{2}$ and $|z| = 1$

51. If $G \subseteq C$ is open and connected, and f is a branch of $\log z$ on G then the totality of branches of $\log z$ are functions $f(z) + i2k\pi; \ k \in Z$

52. State and prove the **sufficient** condition for a function to be analytic.

53. Discuss the mapping $w = \frac{1}{z}$

54. Describe the Riemann Stieltjes integral with proof.

55. Show by example that every path need not be a rectifiable path.

56. State and prove Morera's theorem.

57. Explain the classification of singularities with proof.

58. Find the residues of the function $\frac{z^3}{(z-a)(z-b)(z-c)}$ at their poles and at infinity, and hence find their sum.

59. State and prove Cauchy Residue theorem

60. Show that $\int_0^{2\pi} \frac{d\theta}{2+\cos\theta} = \frac{2\pi}{\sqrt{3}}$

Monika

ATMIYA UNIVERSITY
Faculty of Science
M.Sc. Mathematics

Question Bank

18MMTCC303 – Core 11: Advanced Topics in Linear Algebra *Semester –III*

Part A - Answer the following Questions. **[1 Marks]**

1. Let V and W be any two n-dimensional vector spaces over F, then $\dim(Hom(V,W)) =$ _.
   A) $\dim V$ B) $\dim W$ C) n D) None
2. Let V be any n-dimensional vector space over F, then $\dim(Hom(V,V)) =$ ____.
   A) $\dim V$ B) $\dim W$ C) n^2 D) None
3. Let V be any n-dimensional vector space over F, then $\dim(Hom(V,F)) =$ ____.
   A) $\dim V$ B) $\dim W$ C) n D) Depends on dimension of F
4. An element $T \in A(V)$ is said to be right invertible if there exists an $S \in A(V)$ such that
   A) $TS = 1$ B) $ST = 1$ C) Insufficient Information D) None
5. Let V be a vector space over F and T ∈ A(V). A subspace W of V is called invariant under T if
   A) $T(W) \subset W$ B) $T(W) = W$ C) Both A and B D) None
6. Let V be a vector space over F and T ∈ A(V). A subspace W of V is invariant under any T if $W =$ __?
   A) $\{0\}$ B) V C) Both A and B D) None
7. If W is invariant under S and T then W is invariant under
   A) $S+T$ B) αS C) Both A and B D) None
8. A matrix $(a_{ij}) \in Mn(F)$ is said to be upper triangular if $a_{ij} = 0$.
   A) $\forall i < j$ B) $\forall i > j$ C) $\forall i = j$ D) None
9. Eigen values of lower triangular matrix is
   A) 0 B) All its diagonal entry C) 1 D) All its lower diagonal entry
10. Eigen values of Nilpotent matrix is
    A) Only 1 B) 0 C) Unimodular D) ± 1
11. Two linear transformation in $A_F(V)$ having all their characteristic roots are in F are similar if and only if
    A) They have same Jordan block B) They have same Eigenvalues C) Both A and B D) None
12. Two nilpotent linear transformations are similar if and only if they have the _____ invariants.
    A) Only two B) 0 C) Only one D) Same

Atmiya University Rajkot

13. All the Eigenvalues of Unitary matrix is

A) Some times -1 B) Some times 1 C) Both A and B D) Unimodular

14. The Eigenvalues of skew Hermitian matrix is

A) Complex B) Purely imaginary C) Positive real D) None

15. Which of the following is true?

A) Trace is always sum of the eigen values of a matrix counted according to their multiplicity B) Invertible matrix always having zero trace C) If trace is 0 then matrix must be non invertible D) Both B and C

16. Determinate of any matrix is always

A) Product of entries on the main diagonal B) Products of its eigen value C) Both A and B D) None

17. If T is a Harmitian then iT is

A) Harmitian B) Skew Harmitian C) In sufficient information D) None

18. If $T \in A(V)$ is unitary if and only

A) $T^*T = I$ B) $TT^* = I$ C) In sufficient information D) None

19. A unitary transformation is

A) Non-singular B) Singular C) Depends on Transformation D) None

20. Inverse of unitary matrix is always

A) Skew Symmetric B) Skew Harmitian C) Harmitian D) Both A and B

21. Define linear transformation.
22. Give any two examples which are always invariant under any $T \in A(V)$.
23. Define minimal polynomial.
24. Define the determinate of a matrix.
25. Define inner product space.
26. What is the difference between regular elements and singular elements of A(V) in terms of their range, in finite-dimensional cases?
27. If $\lambda \in F$ is a characteristic root of T then λ is a root of minimal polynomial for T. (True/False)
28. Let V be a finite-dimensional vector space over F and $T \square A(V)$ be nilpotent with an index of nilpotence is n_1. Then there is a basis of V in which the matrix of T is of the form _____.
29. List all the fundamental properties of trace.
30. All the eigenvalues for a unitary matrix are _____.

Atmiya Univ Rajkot

Part B - Answer the following Questions. **[5 Marks]**

1. Write short note on algebra
2. Define rank and Let $S, T \in A(V)$. Then show that $r(TS) \leq r(T)$ and $r(ST) \leq r(T)$
3. Let $T \in A(V)$ and all characteristic roots of T are in F, then show that T satisfies a non trivial polynomial of degree n over F.
4. Show that If $T \in A(V)$ has all its characteristic roots are in F, then there is a basis of V in which the matrix of T is triangular.
5. Let M be a subspace of a vector space V and $T \in A(V)$ be nilpotent. If $\dim(M) = m$ and M is cyclic with respect to T, then show that $\dim(T^k M) = m - k$ for all $k \leq m$.
6. Find the invariants of the linear transformation $T : F3 \rightarrow F3$ defined by $T(x, y, z) = (y, z, 0)$, where $x, y, z \in F$.
7. Write all possible J.C.F. of an operator T whose characteristic polynomial is $C(x) = (x-2)^6(x-3)^4$.
8. Write all possible J.C.F. of an operator T whose characteristic polynomial is $C(x) = (x-7)^6$.
9. Show that the linear transformation T on V is unitary if and only if it takes an orthonormal basis of V into an orthonormal basis of V.
10. State and prove any three properties of adjoint of a linear transformation.
11. Write short note on linear transformation.
12. Explain method of obtaining linear transformation from matrix with one example.
13. Let V be a finite dimensional vector space over F and let $T \in A(V)$. Let W be a subspace of V which is invariant under T. Then T induces a map $\overline{T}: V/W \rightarrow V/W$ defined by $\overline{T}(v + W) = Tv + W, \forall w \in W$, then show that $\overline{T}$ is well defined and $\overline{T} \in A(V/W)$.
14. Let V be an n-dimensional vector space over F. If $T \in A(V)$ has all its characteristic roots (or roots of the minimal polynomial) of T are in F, then show that T satisfies a polynomial of degree n over F.
15. Let M be a subspace of a vector space V and $T \in A(V)$ be nilpotent. If $\dim(M) = m$ and M is cyclic with respect to T, then show that $\dim(T^k M) = m - k$ for all $k \leq m$.
16. If two rows of $A = (a_{ij}) \in M_n(F)$ are equal (i.e., $v_r = v_s$ for $r = s$), then show that $\det(A) = 0$.
17. Let $C(X) = (x-2)^2(x-3)^3$ and $M(X) = (x-2)^2(x-3)^2$ for some operator T, find all possible Jordan Canonical form of T.

Atmiya University Rajkot

18. Write all possible J.C.F. of an operator T whose characteristic polynomial is $C(x) = (x-3)^4$.

19. State and prove any two properties of Nilpotent transformation.

20. State and Prove any two properties of unitary transformation.

Part C - Answer the following Questions. **[7 Marks]**

1. Let $P(x) \in F(x)$. Then prove that $P(A) = 0 \Leftrightarrow P(A') = 0$.

2. Prove that α is a characteristic root of $A \Leftrightarrow \alpha$ is a characteristic root of A'.

3. Prove that Interchanging two rows of a matrix changes the sign of its determinate

4. Explain the definition of determinate for $n = 4$.

5. What is a field of characteristic n? Explain it with an example.

6. Let V be a finite dimensional vector space over Fand $T \in A(V)$. If $\gamma \in F$ is a root of the minimal polynomial for T. Then γ is a characteristic root of T.

7. Let V be a finite dimensional vector space over Fand $T \in A(V)$. If all the characteristic roots of T are in F, then T satisfies a polynomial of degree n over F.

8. If $T \in A(V)$ is nilpotent and $\alpha \in$ Fsuch that $\alpha \neq 0$ then prove that $\alpha I + T$ is regular and its inverse is a polynomial in T.

9. State and prove any three properties of triangular linear transformation.

10. Give an example of nilpotent matrix of order 3 and find the corresponding linear transformation of the same.

11. If $S, T \in A(V)$ are similar then show that they have the same rank i.e., $r(S) = r(T)$. What about the converse?

12. Prove that $S \in A(V)$ is regular if and only if whenever $v_1, v_2, \ldots, v_n$ in V are linearly independent, and then $Sv_1, Sv_2, \ldots, Sv_n$ are also linearly independent.

13. Let V be any finite dimensional vector space over F and $T \in A(V)$, then $p(x) \in F[x]$ is minimal polynomial for T if and only if for any other polynomial $h(x)$, satisfied by T, we have $p(x)|h(x)$.

14. Define unitary transformation and show that its characteristic roots are unit modulus.

15. For $A, B \in M_n(F)$, show that $\det(AB) = \det(A)\det(B)$.

16. Show that the determinate of a triangular matrix is the product of its entries on the main diagonal.

17. The given matrix is in Jordan form. State its characteristic polynomial and its minimal polynomial. (with reason)

$$\begin{pmatrix} 5 & 0 & 0 & 0 \\ 0 & 2 & 1 & 0 \\ 0 & 0 & 2 & 0 \\ 0 & 0 & 0 & 3 \end{pmatrix}$$

18. Let V be a finite-dimensional vector space over Fand $T \in A(V)$ be nilpotent. Then show that the invariant of T is unique.

19. State and prove any two properties of the transpose of a matrix.

20. Find the symmetric matrix associated with quadratic forms:
    1. $xy + yz + xz$
    2. $-y^2 - 2z^2 + 4xy + 8xz - 14yz.$

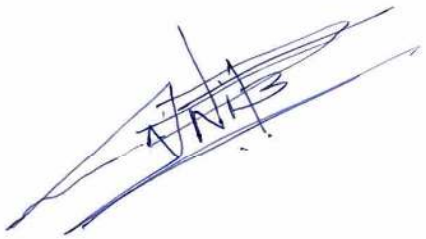

ATMIYA UNIVERSITY
(Established under the Gujarat Private University Act 11, 2018)
Yogidham Gurukul, Kalawad Road, Rajkot - 360005, Gujarat (INDIA)

Science
Mathematics

Assignment No: AU-FoS-DepSLECode-Sem3-Course Code-21MMTCC302

Core 10: Discrete Mathematics
Question Bank
PG-Semester III-Student

Q-1 Determine whether the statement ~A ∧ B ⇒ ~(A ∨ B) is a tautology or not.
Q-2 Prove that the statement (p⇒q) ⇔(~q⇒~p) is a tautology..
Q-3 Write the truth table for P ∧ (Q ∨ R) ≡ (P ∧ Q) ∨ (P ∧ R).
Q-4 Write the truth table for ~(P ∧ Q) ≡ ~P ∨ ~Q.
Q-5 Convert CFL to CFG:

(1) $a^n b^n,\ n \geq 1$
(2) $a^n b^{n+2},\ n \geq 0$
(3) $a^{2n} b^n,\ n \geq 0$
(4) $a^{2n+3} b^n,\ n \geq 0$
(5) $a^m b^n, m > n,\ n \geq 0$
(6) $a^m b^n, m \geq n,\ n \geq 0$
(7) $ww^R \cup w(a+b)w^R$
(8) $\{w \mid n_a(w) = n_b(w)\}$
(9) $a^m b^m c^n,\ m, n \geq 0$

Q-6 Draw FAs that generate the following languages on $\sum = \{0,1\}$

(10) Language of all strings that ends in 00
(11) Language of string that ends in 10
(12) Language of string that contain at least two zeros
(13) Language does not containing string that ends with 01
(14) Language of all string doesn't contain 00 as substring
(15) Strings containing even numbers of zeros
(16) Language of string exactly 2 zeros

Q-7 Write the truth table for p → q ≡ ~p ∨ q
Q-8 Write the truth table for p ↔ q ≡ (p ∧ q) ∨ (~ p ∧ ~q).
Q-9 Draw the Hasse Diagram of $(D_{12}, /)$, $(D_{30}, /)$, $(D_{50}, /)$, $(D_{1030}, /)$.
Q-10 Find FA that recognize languages (1) $L_1 \cup L_2$, (2) $L_1 \cap L_2$, where $\{L_1 = x \in \{0,1\}^* / x\ doesn't\ contain\ 00\}$ and $\{L_2 = x \in \{0,1\}^* / x\ ends\ in\ 01\}$
Q-11 Prove that $(\mathbb{N}, \leq_{div})$ is distributive.
Q-12 Test whether the following arguments are valid or not.

(i) (ii)

Atmiya University

$$\begin{array}{r} p \\ \rightarrow q \\ \sim r \rightarrow p \\ \sim q \\ \hline \therefore r \end{array} \qquad \begin{array}{r} p \rightarrow r \\ r \rightarrow s \\ t \vee \sim s \\ \sim t \vee u \\ \sim u \\ \hline \therefore \sim p \end{array}$$

Q-13 Write a short note on a single error detecting code that can transmit eight alphabets.

Q-14 If $(L, \leq)$ is a lattice then prove that L is modular if and only if any sublattice of L is not isomorphic to pentagonal lattice.

Q-15 Describe the language of Non-Palindromes and find CFG.

Q-16 Prove that a code C can correct all combination of k or fewer error if and only if $d(C) \geq 2k + 1$.

Q-17 Minimize the following expressions using K-map.

(1) $x'yz' + x'yz + xy'z' + xyz' + xyz$,

(2) $A'B'C'D' + A'B'CD' + A'BC'D' + A'BCD + AB'C'D' + AB'CD' + ABC'D' + \quad ABC'D + ABCD' + ABCD + A'BCD'$.

Q-18 Describe the language $L = \{x \in \{0,1\}^* / x = 0^i 1^j 0^k \; with \; j > i + k\}$ and find CFG.

Q-19 Derive Karnaugh Map method for simplification of Boolean Expression.

Q-20 Let p and q are two statements. Then prove the followings:

(i) $p \rightarrow q \equiv (\sim p \vee q)$

(ii) $\sim(p \vee q) \equiv (\sim p) \wedge (\sim q)$

(iii) $p \leftrightarrow q \equiv (p \rightarrow q) \wedge (q \rightarrow p)$

Dr. Neha P. Jamvecha
Dept of Mathematics,
Atmiya University

Atmiya University
Rajkot

ATMIYA UNIVERSITY

Faculty of Engineering & Technology

Question BANK

Program: **M. Tech. Electrical Engineering**	Semester: **II**
Course: **21MEEPCC201 – Advanced Power Electronics**	

1. What Is The Primary Function Of AC To AC Voltage Converters?
2. Name One Application Where AC To AC Voltage Converters Are Commonly Used.
3. Define Three-Phase AC Regulators And Provide An Example Of Their Use.
4. Explain The Concept Of Phase Angle Control In The Context Of TRIAC-Based Single-Phase AC Regulators.
5. How Does A TRIAC-Based Single-Phase AC Regulator Control The Output Voltage?
6. What Is The Significance Of Phase Angle Control In Power Electronics?
7. Briefly Describe The Working Principle Of AC To AC Voltage Converters.
8. Give An Example Of A Practical Scenario Where Three-Phase AC Regulators Are Advantageous.
9. How Does Phase Angle Control Contribute To The Regulation Of Output Voltage In TRIAC-Based Systems?
10. Name A Device Commonly Used For Phase Angle Control In AC Regulators And Briefly Explain Its Operation.
11. Explain The Fundamental Concept Of AC To AC Voltage Converters And Their Significance In Power Electronics.
12. Compare And Contrast Single-Phase And Three-Phase AC Regulators, Highlighting Their Applications And Advantages.
13. Discuss The Operating Principles Of A Three-Phase AC Regulator, Emphasizing Its Role In Controlling Alternating Current.
14. Describe The Key Components And Working Principles Involved In Phase Angle Control In TRIAC-Based Single-Phase AC Regulators.
15. Illustrate The Application Scenarios Where AC To AC Voltage Converters Are Preferred Over Other Types Of Power Converters.
16. Elaborate On The Challenges And Limitations Associated With Three-Phase AC Regulators And Potential Solutions To Address Them.
17. How Does Phase Angle Control Impact The Output Waveform In TRIAC-Based Single-Phase AC Regulators? Explain With Relevant Diagrams.
18. Explain The Fundamental Operation Of AC To AC Voltage Converters And Discuss The Key Components Involved In Their Design.
19. Compare And Contrast Single-Phase And Three-Phase AC Regulators, Highlighting Their Respective Advantages And Applications.

Atmiya University

20. Give The Concept Of Phase Angle Control In TRIAC-Based Single-Phase AC Regulators, Discussing Its Significance In Controlling Output Voltage And Current.
21. What Is The Primary Function Of A Cycloconverter?
22. Briefly Explain The Operation Of A Three-Phase To Single-Phase Cycloconverter.
23. In A Three-Phase To Three-Phase Cycloconverter, What Is The Significance Of The Control Circuit?
24. Differentiate Between Three-Phase To Single-Phase And Three-Phase To Three-Phase Cycloconverters.
25. What Role Does The Control Circuit Play In Regulating The Output Of A Three-Phase To Three-Phase Cycloconverter?
26. Explain The Basic Concept Of Cycloconverters And Their Applications.
27. Compare And Contrast Three-Phase To Single-Phase Cycloconverters With Three-Phase To Three-Phase Cycloconverters. Highlight Their Advantages And Limitations.
28. Discuss The Key Components And Operation Of The Control Circuit In Three-Phase To Three-Phase Cycloconverters. How Does The Control Circuit Contribute To The Overall Performance Of The System?

Atmiya University

ATMIYA UNIVERSITY, Rajkot
Faculty of Science
Department of Mathematics

Question Bank
Academic Year: 2022-23

Program: **B.Sc. Mathematics** Semester: **II**

Course Code: **21BMTCC202** Course: **Advanced Calculus**

Part A

1.	True/False: If iterated limits of a function of two variables are equal then limit of function exists.
2	Define: Continuity of function of two variables.
3	Find the first order partial derivatives of $f(x,y)=x^3y-2xy^2+x^2-7$ at a point $(0,1)$.
4	Directional derivative of $f(x,y)=x^2+y^2-xy-1$ at a point $(2,1)$ in the direction of $\left(\frac{1}{\sqrt{2}},\frac{1}{\sqrt{2}}\right)$ is _____.
5	State: Young's Theorem.
6	Degree of Homogeneous function $f(x,y)=\sin^{-1}\left(\frac{xy}{x^2+y^2}\right)$ is _____.
7	Evaluate $\int_0^{\frac{\pi}{2}} \sin^5\theta\cos^6\theta d\theta$.
8	Find $\int_0^{\frac{\pi}{2}} \cos^6\theta d\theta$.
9	Find $\beta\left(\frac{1}{2},\frac{3}{2}\right)$.
10	Write Legendre's duplication formula.
11	$\lim_{(x,y)\to(1,2)} \frac{x+y}{x-y}=$ _____
12	True/false : $f(x,y)=\begin{cases}\frac{xy}{x^2+y^2} & (x,y)\neq(0,0)\\ 0 & (x,y)=(0,0)\end{cases}$ is continuous at (0,0)
13	$\lim_{(x,y)\to(\infty,1)} \tan^{-1}\left(\frac{x}{y}\right)=$ _____
14	What is the degree of homogenous function $f(x,y)=\frac{x^4+y^4}{2x}$?
15	If $z=\frac{x}{y}+\frac{y}{x}$ then $x\frac{\partial z}{\partial x}+y\frac{\partial z}{\partial y}=$ _____.
16	Directional derivative of $f(x,y)=x^2+y^2-xy-1$ at a point $(2,1)$ in the direction of $\left(\frac{1}{\sqrt{2}},\frac{1}{\sqrt{2}}\right)$ is _____.

Atmiya University Rajkot

17	Using definition of limit prove that $\lim_{(x,y)\to(-1,3)} x^2 y = 3$.
18	If $f(x,y) = \begin{cases} \frac{2x-y}{x^2+y^2} & (x,y) \neq (0,0) \\ 0 & (x,y) = (0,0) \end{cases}$ then discuss the continuity of $f(x,y)$ at a point $(0,0)$.
19	If $u = \log(x^2+y^2) + \tan^{-1}\left(\frac{y}{x}\right)$, find the value of $\frac{\partial^2 u}{\partial x^2} + \frac{\partial^2 u}{\partial y^2}$.
20	If $y^3 - 3ax^2 + x^3 = 0$ then prove that $\frac{d^2y}{dx^2} + \frac{2a^2x^2}{y^5} = 0$.
21	State and prove Euler's theorem for homogeneous function of two variables.
22	Expand $e^x \cos y$ in powers of x & y up to three degree.
23	Evaluate $\int_0^{\frac{\pi}{6}} \cos^6 3\theta \sin^3 6\theta d\theta$.
24	Evaluate $\int_0^{\pi} \sin^2\theta (1+\cos\theta)^4 d\theta$.
25	Evaluate $\int_0^{\frac{\pi}{2}} \sin^6\theta \cos^4\theta d\theta$ using Beta-Gamma function.
26	Prove that $\beta(p,q) = \int_0^{\infty} \frac{y^{p-1}}{(1+y)^{p+q}} dy; p>0, q>0$.
27	If $\theta = t^n e^{\frac{-r^2}{4t}}$ & $\frac{1}{r^2}\frac{\partial}{\partial r}\left(r^2 \frac{\partial\theta}{\partial r}\right) = \frac{\partial\theta}{\partial t}$ then find value of n.
28	If $u = \phi(x^2+2yz, y^2+2zx)$ then prove that $(y^2-zx)\frac{\partial u}{\partial x} + (x^2-zy)\frac{\partial u}{\partial y} + (z^2-xy)\frac{\partial u}{\partial z} = 0$.
29	If the function $z = f(x,y)$ possesses the first order partial derivatives in the domain D then, prove that z is differentiable in domain D.
30	If $u = \sin^{-1}\left(\frac{x^{\frac{1}{4}} + y^{\frac{1}{4}}}{x^{\frac{1}{5}} + y^{\frac{1}{5}}}\right)$ then prove that $x\frac{\partial u}{\partial x} + y\frac{\partial u}{\partial y} = \frac{1}{20}\tan u$
31	Find the length of the shortest line from the point $\left(0,0,\frac{25}{9}\right)$ to the surface $z = xy$.
32	State and prove Taylor's theorem for function of two variables
33	Derive reduction formula for $\int_0^{\frac{\pi}{4}} \tan^n\theta d\theta$ (n>2) and using it find the value of $\int_0^{\frac{\pi}{4}} \tan^5\theta d\theta$.
34	Derive reduction formula for $\int_0^{\frac{\pi}{2}} \sin^n x dx$.

Atmiya University Rajkot

35	(i)Prove that $\int_0^{\frac{\pi}{2}} \sin^m\theta\cos^n\theta d\theta = \frac{\lfloor\frac{m+1}{2}\rfloor\lfloor\frac{n+1}{2}}{2\lfloor\frac{m+n+1}{2}}$. (ii)Evaluate $\int_0^{\infty} \frac{1}{1+x^4}dx$.
36	Evaluate $\lfloor\frac{1}{2}$.
37	If $\theta = t^n e^{\frac{-r^2}{4t}}$ & $\frac{1}{r^2}\frac{\partial}{\partial r}\left(r^2\frac{\partial\theta}{\partial r}\right) = \frac{\partial\theta}{\partial t}$ then find value of n.
38	If $u = e^{xyz}$ then prove that $\frac{\partial^3 u}{\partial x\partial y\partial z} = \left(1+3xyz+x^2y^2z^2\right)u$.
39	State and prove Euler's theorem for homogeneous function of two variables.
40	If $u = (1-2xy+y^2)^{\frac{-1}{2}}$, find the value of $\frac{\partial}{\partial x}\left[\left(1-x^2\right)\frac{\partial u}{\partial x}\right]+\frac{\partial}{\partial y}\left(y^2\frac{\partial u}{\partial y}\right)$.
41	Find the length of the shortest line from the point $\left(0,0,\frac{25}{9}\right)$ to the surface $z = xy$.
42	If $u = \sin^{-1}\left(\frac{x^{\frac{1}{4}}+y^{\frac{1}{4}}}{x^{\frac{1}{5}}+y^{\frac{1}{5}}}\right)$ then prove that $x\frac{\partial u}{\partial x}+y\frac{\partial u}{\partial y} = \frac{1}{20}\tan u$

Atmiya University
Rajkot

ATMIYA UNIVERSITY
Faculty of Engineering and Technology
Department of Electrical Engineering
UG Semester – I

Faculty Name	Subject Name	Semester	Course Credit And Hours
ANKIT LEHRU , DHAVAL VORA	Fundamentals of Electrical Engineering	UG Semester–I	2 Credits – 2 Hrs/wk (T) 1 Credit – 2 Hrs/wk (P)

QUESTION BANK

UNIT I : Basic Concepts Of Electricity

1. State & Explain Ohm's Law And Give Its Limitations.
2. State And Explain Kirchhoff's Laws.
3. Derive The Formula To Convert A Star Network To Delta Network For Resistance.
4. Derive The Formula To Convert A For Delta To Star Conversion For Resistance.
5. Give Comparison Between Series & Parallel Circuit.
6. Discuss Current Dividing Rule & Voltage Dividing Rule.
7. Explain How Ac Sinusoidal EMF Is Generated? Derive Its Equation $E = E_m * \sin(\omega t)$
8. Define: RMS Value , Peak Factor , Average Value , Form Factor , Frequency , Power Factor

UNIT II : Single Phase And Three Phase A.C. Circuits

9. State & Explain Faradays Law Of Electromagnetic Induction.
10. Prove That Pure Resistive Circuit Has Unity Power Factor. Draw The Wave Forms Of Voltage, Current And Instantaneous Power.
11. Prove That Current In Purely Capacitive Circuit Leads Its Voltage By 90° And Average Power Consumption In Pure Capacitor Is Zero.
12. Prove That Current In Purely Inductive Circuit Lags Its Voltage By 90° And Average Power Consumption In Pure Inductor Is Zero.

Atmiya University Rajkot

13. **Explain Series R-L-C Circuit With The Phasor Diagram For XL > XC; XL < XC & XL = XC.**
14. **Explain R-L Series Circuit With Neat Diagram.**
15. **Explain R-C Series Circuit With Neat Diagram.**
16. **Establish Relationship Between Line And Phase Voltages And Currents In Balanced Star Connection. Draw Complete Phasor Diagram Of Voltages And Currents.**
17. **Establish Relationship Between Line And Phase Voltages And Currents In Balanced Delta Connection. Draw Complete Phasor Diagram Of Voltages And Currents.**
18. **Necessity And Advantage Of Three Phase System.**

UNIT III : Electrostatics and Electromagnetism

19. **Explain (I) Electric Field Intensity, (II) Electric Potential, (III) Permittivity, (IV) Capacitance**
20. **Derive Equation For Energy Stored In Capacitor.**
21. **Explain Charging Of A Capacitor With Derivation Of Equation Of Voltage Across It.**
22. **Explain Discharging Of A Capacitor With Derivation Of Equation Of Voltage Across It.**
23. **Derive An Expression For The Equivalent Capacitance Of Parallel Plate Capacitors When They Are Connected In (I) Series And (II) Parallel.**
24. **Give Comparison Between Electrical Circuit And Magnetic Circuit.**
25. **Define Co-Efficient Of Coupling. Derive The Relation Between Self And Mutual Inductance.**
26. **Explain Charging Of Inductor Also Derive Its Equation.**
27. **Explain Discharging Of Inductor Also Derive It's Equation.**

Atmiya University Rajkot

UNIT IV : DC Machine And Transformer

28. **Explain Faradays Electromagnetic Induction laws.**
29. **Give Statements Of Following Fundamental Electrical Laws To Electrical Circuits.**

Fleming's Left Hand Rule	Fleming's Right Hand Rule	Screw Rule	Lenz Law

30. **Give Classification of DC Machine.**
31. **Explain Working Principle of DC Machine (Generator & Motor).**
32. **Explain Construction and basic parts of DC machine in detail.**
33. **Explain types of Armature winding in DC machine.**
34. **Derive the equation of Generated EMF for DC machine.**
35. **Discuss Applications of DC machine.**
36. **Explain Types of DC Generator in detail.**
37. **Application of DC motor.**
38. **A 4–Pole Generator, Having Wave-Wound Armature Winding Has 51 Slots, Each Slot Containing 20 Conductors. What Will Be The Voltage Generated In The Machine When Driven At 1500 RPM Assuming The Flux Per Pole To Be 7.0 mWb ? (Also Calculate EMF If Machine Is Lap Wound)**
39. **An 8-Pole D.C. Generator Has 500 Armature Conductors, And A Useful Flux Of 0.05 Wb Per Pole. What Will Be The E.M.F. Generated If It Is Lap-Connected And Runs At 1200 RPM ? What Must Be The Speed At Which It Is To Be Driven Produce The Same E.M.F. If It Is Wave-Wound?**
40. **A 4-Pole, Lap-Wound, D.C. Shunt Generator Has A Useful Flux Per Pole Of 0.07 Wb. The Armature Winding Consists Of 220 Turns Each Of 0.004 Ω Resistance. Calculate The Terminal Voltage When Running At 900 R.P.M.**
41. **A Four-Pole Lap-Wound D.C. Shunt Generator Having 80 Slots With 10 Conductors Per Slot Generates At No-Load An E.M.F. Of 400 V, When Run At 1000 RPM. How Will You Obtain A Generated Open-Circuit Voltage Of 220 V?**

Atmiya University Rajkot

UNIT V : AC Machines & Earthing

42. **Explain Types And Need Of Transformer.**
43. **Derive EMF Equation Of Transformer.**
44. **Compare Core Type And Shell Type Transformer.**
45. **Explain Types Of Rotor Of Induction Motor For 3- Phase.**
46. **Explain Working Of Induction Motor.**
47. **Why 1-Phase Induction Motor Is Not Self Starting?**
48. **Write Types of 1-Phase Induction Motor And Explain Anyone In Detail.**
49. **Application Of Induction Motor (1 Phase & 3 Phase)**
50. **What Is Earthing? And Why It Is Necessary?**
51. **Write Various Methods of Earthing And Explain Anyone Method In Detail.**
52. **Example 1.** *The maximum flux density in the core of a 250/3000-volts, 50-Hz single-phase transformer is 1.2 Wb/m^2. If the e.m.f. per turn is 8 volt, determine*
    (i) primary and secondary turns (ii) area of the core.
53. **Example 2.** *The core of a 100-kVA, 11000/550 V, 50-Hz, 1-ph, core type transformer has a cross-section of 20 cm × 20 cm. Find (i) the number of H.V. and L.V. turns per phase and (ii) the e.m.f. per turn if the maximum core density is not to exceed 1.3 Tesla. Assume a stacking factor of 0.9.*
    What will happen if its primary voltage is increased by 10% on no-load ?
54. **Example 3** *A 25-kVA transformer has 500 turns on the primary and 50 turns on the secondary winding. The primary is connected to 3000-V, 50-Hz supply. Find the full-load primary and secondary currents, the secondary e.m.f. and the maximum flux in the core. Neglect leakage drops and no-load primary current.*

Faculty **H.O.D.**

Atmiya University Rajkot

Faculty of Engineering and Technology
Department of Computer Engineering

Course Code	Course Title
23UGCE303	Cyber security

Sr. No.	Question	Mark
1	Give difference between IPS & IDS	4
2	Explain Cross Site Scripting in detail.	7
3	Explain Firewall in detail.	7
4	Explain Network Based IPS in detail.	4
6	Explain Host Based IPS in detail.	4
7	Explain Reflected Cross Site Scripting in detail.	4
8	Explain Stored Cross Site Scripting in detail.	4
9	Explain phishing in detail.	4
10	Explain active sniffing in detail.	7
11	Explain passive sniffing in detail.	7

Sr. No.	Question	Mark
1	Explain Variety of moral issues in detail.	4
2	Explain types of inquiry in detail.	4
3	Explain causes of moral dilemmas in detail.	4
4	Explain Problem of Vagueness in detail.	4
5	Explain Problem of conflicting reasons in detail.	4
6	Explain Problem of disagreement in detail.	4
7	Explain Factual inquiries in detail.	7
8	Explain moral autonomy in detail.	7
9	Explain Kohlber's theory in detail.	7
10	Explain models of professional roles in detail.	7

Atmiya University

Sr. No.	Question Bank	Mark
1	Explain theories about right action in detail.	4
2	Explain controversy in detail.	4
3	Explain consesus in detail.	4
4	Explain uses of Ethical Theories.	4
5	Explain self interest in detail.	4
6	Explain customs in ethics in detail.	4
7	Explain religion in ethics in detail.	4
8	Explain golden mean ethical theory in detail.	7
9	Explain duty based ethics in detail	7
10	Explain right based theory in detail.	7
11	Explain utilitarian theory in detail.	7

Atmiya University

ATMIYA UNIVERSITY

(Established under the Gujarat Private University Act 11, 2018)

Yogidham Gurukul, Kalawad Road, Rajkot - 360005, Gujarat (INDIA)

Faculty of Science
Department of Mathematics
Question Bank

Core 1: Matrix Algebra

1. If A is a matrix of order p × r and B is a matrix of order r × r, then what is the order of the product of matrix AB?
2. If A is a matrix of order p × r and B is a matrix of order r × r, then addition of A and B is possible if _____.
3. A matrix of order 3 having eigen value namely 1, 2 and 0 then what is the possible rank of A?
4. What is the determinate of square matrix?
5. State Cayley-Hamilton theorem.
6. Write any one application of Cayley-Hamilton theorem.
7. Write any two differences between Gauss Jordan and Gauss elimination methods.
8. Can we apply Cremer's rule for all the system of simultaneous system of linear equation?
9. Can we apply Cayley-Hamilton theorem on non - square the matrices?
10. Let A be any matrix of order 3 then write general form of characteristic equation.

11a. i. Define Hermitian matrix with example.

ii. If $A = \begin{bmatrix} 6 & -3 \\ -3 & -9 \\ -12 & -6 \end{bmatrix}$ then find B such that $2A' + 3B'$ is null matrix.

OR

11b. Find inverse of A by using adjoint where $A = \begin{bmatrix} 1 & 1 & 6 \\ 4 & 5 & 1 \\ 2 & 3 & 8 \end{bmatrix}$.

12a. State and prove any three properties of transpose of matrix.

OR

12b. State and prove any three properties of conjugate of matrix.

13a. Find rank of $\begin{bmatrix} 5 & 3 & 14 & 4 \\ 0 & 1 & -2 & 1 \\ 1 & -1 & -2 & 0 \end{bmatrix}$ with detailed explanation.

OR

13b. Let $A = \begin{bmatrix} 1 & -2 & -9 \\ 0 & -2 & -8 \\ 0 & 0 & -7 \end{bmatrix}$ Find inverse of the A by using Cayley Hamilton theorem.

14a. For which value of λ and μ the below system has no solution

$x + 2y + z = 8$

$2x + 2y + 2z = 13$

$3x + 4y + \lambda z = \mu$

OR

14b. For which value of λ and μ the below system has unique solution

$x + 2y + z = 8$

$2x + 2y + 2z = 13$

$3x + 4y + \lambda z = \mu$

15a. If $A = \begin{bmatrix} 3 & -2 \\ 4 & -3 \end{bmatrix}$ then find A^{67}.

OR

15b. If $A = \begin{bmatrix} 3 & -2 \\ 4 & -3 \end{bmatrix}$ then find $2A^{57} + 3A^{18}$.

16a. i. Define matrix multiplication for n order matrix.

ii. Prove that matrix multiplication is not commutative.

OR

16b. i. Define trace of matrix.

ii. If $A = \begin{bmatrix} \cos\alpha & -\sin\alpha \\ \sin\alpha & \cos\alpha \end{bmatrix}$ with $A + A' = I$ then find value of α.

17a. Find rank of $\begin{bmatrix} 0 & 1 & 3 & 1 \\ 1 & 0 & 1 & 1 \\ 3 & 1 & 0 & 2 \\ 1 & 1 & 2 & 0 \end{bmatrix}$.

OR

17b. Compute inverse of $\begin{bmatrix} 0 & 2 & 1 & 3 \\ 1 & 1 & 1 & 2 \\ 1 & 2 & 0 & 1 \\ 1 & 1 & 2 & 6 \end{bmatrix}$.

18a. Verify Cayley Hamilton theorem for matrix of order 3.

OR

18b. Find eigen vector corresponding to all eigen values of $\begin{bmatrix} 8 & -6 & 2 \\ 6 & -7 & 4 \\ 2 & -4 & 3 \end{bmatrix}$.

19a. Give an example of simultaneous system of linear equation which has infinite solution and also prove it.

OR

19b. Explain the inverse of matrix method for solution of simultaneous system of linear equations.

20a. If $A = \begin{bmatrix} 1 & 0 & 0 \\ 0 & 1 & 1 \\ 0 & 0 & 1 \end{bmatrix}$ then find A^{10}.

OR

20b. If $A = \begin{bmatrix} 2 & 3 \\ \cdot & \cdot \end{bmatrix}$ then find A^{50}.

Atmiya Uni
Rajkot

Question Bank

Fundamentals of Mathematical Analysis

1. A monotonic sequence is convergent if and only if it is _____.
2. The sequence $S_n = \{1,2,1,3,1,4,1,5, \ldots\}$ is not convergent. (True/ False)
3. Define Leibniz's test for the convergence of an alternating series.
4. Test the convergence of $\sum_{n=0}^{\infty} \frac{3^{2n}}{2^{3n}}$.
5. The l.u.b of $f(x)=\frac{1}{x}$ in $[-3,-2]$ is ---
6. Suppose $\int_1^5 g(x)dx = 9$ and $\int_4^5 g(x)dx = -1$. Find $\int_1^4 5.g(x)dx$
7. If P and Q are partitions of an interval [a, b] such that $Q \subset P$ then comment on their norms.
8. Assume $f'(x)$ is an everywhere continuous function where $\int_1^2 f'(x)dx = 10$ and $f(2) = 4$. Find $f(1)$
9. Define lower sum of a function $f: I \to R$.
10. $\int_1^{\infty} \frac{1}{x^p} dx$ converges if ---
11. If S_n and T_n are convergent then show that $S_n + T_n$ is convergent. Is the converse true? Justify your answer with example.
12. State and Prove Cauchy's General Principle of convergence of sequence.
13. Test the convergence of the series $1 + \frac{1+a}{1+b} + \frac{(1+a)(2+a)}{(1+b)(2+b)} + \frac{(1+a)(2+a)(3+a)}{(1+b)(2+b)(3+b)} + \cdots$
14. Test the convergence of the series $\frac{x}{1\cdot 3} + \frac{x^2}{3\cdot 5} + \frac{x^3}{5\cdot 7} + \cdots$
15. Show that an integral function of an integrable function is continuous.
16. Show by an example that every bounded function need not be Riemann integrable.
17. Prove the following: "If Q is a refinement of a partition P, then for a bounded function f, $L(P,f) \le L(Q,f) \le U(Q,f) \le U(P,f)$".

18 State and prove Fundamental theorem of Calculus.

19 Discuss the convergence of $\int_0^1 \frac{dx}{1-x}$

20 Test the convergence of $\int_{-\infty}^{0} \sinh x \ dx$.

21 Show that S_n is convergent, where $S_{n+1} = 3 - \frac{2}{S_n}$ and $S_1 = 4$. Find its limit point.

22 State and prove Cauchy's first theorem on limits.

23 Show that the series $\sum (-1)^n \left(\sqrt{n^2+1} - n \right)$ is conditionally convergent.

24 Find the radius of convergence and interval of convergence of the series $\sum_{n=0}^{\infty} \frac{(-1)^n}{n+1} x^{2n}$.

25 State and proof any necessary and sufficient condition for a function to be Riemann Integrab

26 Given $f(x) = \frac{20}{x}; x \in [2,20]$ and $P = \{2,4,5,20\}$ then find L(P, f) and U(P. f)

27 a) Show that $-\pi^5 \leq \int_0^{\pi} x^4 (3. \sin x + 4. \cos x) dx \leq \pi^5$

b) Evaluate $\lim_{n\to\infty} \frac{1}{\sqrt{4n^2-1}} + \frac{1}{\sqrt{4n^2-2^2}} + \cdots + \frac{1}{\sqrt{3n^2}}$

28 State and prove Generalized (First) Mean Value Theorem

29 Discuss the convergence of $\int_0^{\infty} \frac{x^{2m}}{1+x^{2n}} dx$; m, n are positive integers.

30 Discuss the convergence of $\int_0^{\infty} \frac{x^3}{(x^2+a^2)^2} dx$

31. The sequence (sin n) is .... (Convergent/ Divergent/ Oscillatory).

32. $\sum \frac{1}{3^n} = \cdots$

33. $\frac{1}{1^2} + \frac{1}{2^3} + \frac{1}{3^4} + \cdots$ (Convergent/ Divergent)?

Atmiya University Rajkot

34. When do the series $1 + x + x^2 + x^3 + \cdots$ is convergent?

35. If P_1 and P_2 are two partitions of an interval I and $P_1 \subseteq P_2$ then what can you say about their norms?

36. Give an example of a function which is bounded, but not Riemann integrable.

37. State Darboux theorem.

38. Fill in the blanks: If a bounded function defined on [a, b] has $--$ $-$ number of discontinuous points in [a, b] then $f \in R_{[a,b]}$.

39. The integral $\int_0^\infty e^{-mx}dx$ is ....(Convergent/ Divergent)?

40. The integral $\int_1^\infty \frac{dx}{x}$ is ....(Convergent/ Divergent)?

41 Let $x_n = \frac{3.5.7 \ldots (2n+1)}{2.5.8 \ldots (3n-1)}$ for all $n \in \mathbb{N}$. Examine whether the sequence (x_n) is convergent. Also find the limit if it is convergent.

42 Let $x_n = \sqrt{4n^2 + n} - 2n$ for all $n \in \mathbb{N}$. Examine whether the sequence (x_n) is convergent. Also find the limit if it is convergent.

43 Check the convergence of $\frac{4}{1} + \frac{5}{4} + \frac{6}{9} + \frac{7}{16} + \cdots$

44 Check the convergence of $\frac{1}{1.2.3} + \frac{1}{2.3.4} + \frac{1}{3.4.5} + \cdots$

45 If $f(x) = [x]$; $x \in [0,3]$ show that $f \in R_{[0,3]}$ and find $\int_0^3 f(x)dx$.

46 Prove that, if f is continuous in [a, b] then f is R – integrable.

47 State and prove Fundamental theorem of integration.

48 Evaluate $\lim_{n\to\infty} \frac{1}{n}\left[\sin\frac{\pi}{n} + \sin\frac{2\pi}{n} + \cdots + \sin\frac{n\pi}{n}\right]$

Atmiya University Rajkot

50 Test the convergence of $\int_0^2 \frac{2x}{x^2-4}dx$. If it is convergent find the value.

51 State true or false giving proper justification:

(i) If both (x_n) and (y_n) are unbounded sequences in $\mathbb{R}$, then the sequence $(x_n y_n)$ cannot be con

(ii) If both (x_n) and (y_n) are increasing sequences in $\mathbb{R}$, then sequence $(x_n y_n)$ must be increasin

52 Let $x_n = \frac{n}{n^3+1} + \frac{2n}{n^3+2} + \cdots + \frac{n^2}{n^3+n}$ for all n $\in \mathbb{N}$. Examine whether the sequence (x_n) is convergent. Also find the limit if it is convergent.

53 Explain the p – test for the convergence of series with proof.

54 Check the convergence of $\sum_{n=1}^{\infty} \frac{\sqrt{n+1}-\sqrt{n}}{n}$.

55 If $f(x) = \frac{1}{x+1}$; $x \in [0,1]$ and $P = \left(0, \frac{1}{5}, \frac{2}{5}, \frac{3}{5}, \frac{4}{5}, 1\right)$ find L(P, f) and U(P, f).

56 Prove the following: "Any bounded function f in [a, b] is R – integrable if and only if $\forall \epsilon > 0$, there exist a partition P of [a, b] such that $U(P,f) - L(P,f) < \epsilon$; $\|P\| < \delta$".

57 Show that $\left|\int_a^b \frac{\sin x}{x}dx\right| \leq \frac{2}{a}$; $0 < a < b < \pi$.

58 State and prove Weierstrass' form of second mean value theorem

59 Test the convergence of $\int_0^{\infty} \frac{1-\cos x}{x^2}dx$.

60 Test the convergence of $\int_0^3 \frac{dx}{(x-1)^{\frac{2}{3}}}$.

R.V.I.

ATMIYA University, Rajkot
Faculty of Science
Department of Mathematics
AY: 2022-23

ACADEMIC ACTIVITIES

Question Bank: BSc Mathematics Sem– 3

Subject: Basics of Numerical Analysis (21BMTCC302)

1 Gauss Jacobi method is an iterative method.

(A) True (B) False (C) Can't say (D) None of these

2 Which of the following are not direct methods to solve simultaneous linear algebraic equations?

(A) Gauss Elimination (B) Gauss Jordan (C) Crout's (D) None of these

3 In Gauss Jordan method, the coefficient matrix is reduced to unit matrix by applying elementary _____ transformations to the augmented matrix.

(A) Column (B) Row (C) A & B both (D) None of these

4 In L.U. Decomposition method, matrix " U" means _____ matrix.

(A) Unit lower triangular (B) Lower triangular (C) Upper triangular (D) Triangular

5 In which method, given system of linear equations must be diagonally dominant?

(A) Gauss Jacobi (B) Gauss Jordan (C) Gauss Elimination (D) None of these

6 To solve the given system of linear equation, we transform the system into _____ matrix.

(A) Row (B) Column (C) Augmented (D) None of these

7 In Gauss Jacobi method, initial values (1st iteration) of (x, y, z) as (x_0, y_0, z_0) is taken as _____.

(A) 0 (B) 1 (C) 2 (D) 3

8 Find solution of given system of linear equations.
$6x + 2y - z = 4, x + 5y + z = 3, 2x + y + 4z = 27$

(A) $x = 2, y = -1, z = 6$ (B) $x = 2, y = -1, z = -6$
(C) $x = 2, y = 1, z = 6$ (D) $x = -2, y = 1, z = 6$

Atmiya University Rajkot

9 Find solution of given system of linear equations.
$4x + y + 3z = 17, x + 5y + z = 14, 2x - y + 8z = 12$

(A) $x = 3, y = -2, z = 1$ (B) $x = -3, y = 2, z = -1$
(C) $x = 3, y = 2, z = 1$ (D) $x = -3, y = 2, z = 1$

10 Find solution of given system of linear equations.
$20x + y - 2z = 17, 3x + 20y - z = -18, 2x - 3y + 20z = 25$

(A) $x = 1, y = 1, z = 1$ (B) $x = -1, y = -1, z = -1$
(C) $x = -1, y = 1, z = -1$ (D) $x = 1, y = -1, z = 1$

11 $\Delta y_n =$ _____

(A) $y_{n+1} + y_n$ (B) $y_{n+1} - y_n$ (C) $y_n - y_{n+1}$ (D) $y_{n+2} + y_{n+1}$

12 $\Delta =$ _____.

(A) $E\Delta$ (B) ∇E (C) $\delta E^{\frac{1}{2}}$ (D) All of these

13 The nth difference of a polynomial of degree n is _____.

(A) Zero (B) Constant (C) $n!$ (D) None of these

14 $x^{(2)} =$ _____.

(A) x (B) x^2 (C) $x(x - h)$ (D) None of these

15 E is called _____ operator.

(A) Shift (B) Differential (C) Averaging (D) Unit

16 For reciprocal polynomial $\Delta x^{-r} =$ _____.

(A) $(-r)hx^{(-r-1)}$ (B) $(r)hx^{(-r-1)}$ (C) $(-r)hx^{(r-1)}$ (D) $(r)hx^{(-r+1)}$

17 $(1 + \Delta)(1 - \nabla) =$ _____.

(A) 0 (B) -1 (C) 1 (D) $\Delta\nabla$

18 $\Delta^6 x^{(6)} =$ _____.

(A) 0 (B) 120 (C) 240 (D) 720

Atmiya University
Rajkot

19 $\Delta^m.\Delta^n f(x) =$ _____., $(m, n > 0)$

(A) $\Delta^{mn} f(x)$ (B) $\Delta^{m+n} f(x)$ (C) $\Delta^{m-n} f(x)$ (D) $\Delta^{\frac{m}{n}} f(x)$

20 To determine the values of $y = f(x)$ for some intermediate values of x, which of the following differences are used?

(A) Forward differences
(B) Backward differences
(C) Central differences
(D) All of above

21 The process of finding the values of y corresponding to any value of $x = x_i$, $for\ i = 1,2, \ldots, n$ between x_0 & x_n is called _____.

(A) Interpolation (B) extrapolation (C) A & B both (D) none of these

22 Gregory-Newton Forward interpolation formula is used mainly to interpolate the values of y near _____ of a set of tabulated values.

(A) middle (B) end (C) beginning (D) None of these

23 Gregory-Newton Backward interpolation formula is used mainly to extrapolate the values of y a little _____ of y_n in the table.

(A) left (B) right (C) A & B both (D) None of these

24 _____ is a technique of obtaining the value of a function $y = f(x)$ for any intermediate values of the independent variable x between x_0 & x_n.

(A) Interpolation (B) extrapolation (C) A & B both (D) none of these

25 In Gregory-Newton Forward interpolation formula, in general $A_n =$ _____.

(A) $\frac{\Delta y_0}{n!h^n}$ (B) $\frac{\Delta y_1}{n!h^n}$ (C) $\frac{\Delta^n y_0}{n!h^n}$ (D) $\frac{\Delta^{n+1} y_0}{n!h^n}$

26 $\nabla y_n =$ _____.

(A) $y_n + y_{n+1}$ (B) $y_n - y_{n-1}$ (C) $y_n - y_{n+1}$ (D) $y_{n+1} + y_{2n+1}$

27 $y_1 - y_0 =$ _____.

(A) Δy_0 (B) ∇y_1 (C) $\delta y_{\frac{1}{2}}$ (D) All of these

28 $E^n f(x) =$ _____.

(A) $f(x + nh)$ (B) $-f(x + nh)$ (C) $f(x - nh)$ (D) $-f(x - nh)$

29 $\nabla f(x) =$ _____.

Atmiya University Rajkot

(A) $f(x)+f(x+h)$
(B) $f(x)+f(x-h)$
(C) $f(x)-f(x-h)$
(D) $f(x+h)-f(x)$

30 $E^{-1}=$ ____.

(A) $1+\nabla$ (B) $1-\nabla$ (C) $1+2\nabla$ (D) $1-2\nabla$

31 If α & β are roots of $a_0x^2+a_1x+a_2=0$ then $(\alpha+\beta)=$ ____.

(A) $\frac{a_2}{a_1}$ (B) $\frac{a_2}{a_0}$ (C) $-\frac{a_1}{a_0}$ (D) $\frac{a_1}{a_0}$

32 If α, β & γ are roots of $a_0x^3+a_1x^2+a_2x+a_3=0$ then $(\alpha\beta\gamma)=$ ____.

(A) $\frac{a_2}{a_1}$ (B) $\frac{a_3}{a_0}$ (C) $-\frac{a_1}{a_0}$ (D) $-\frac{a_3}{a_0}$

33 In arithmetic progression difference between two consecutive terms are _____.

(A) Same (B) different (C) can't say (D) none of these

34 In _____ progression ratio between two consecutive terms is same.

(A) Arithmetic (B) geometric (C) harmonic (D) none of these

35 An equation with real coefficients complex roots occur in _____ pairs.

(A) Same (B) different (C) conjugate (D) none of these

36 Find the equation whose roots are with opposite signs to the given equation $4x^4+x^3+x^2+2x+4=0$

(A) $4y^4-y^3+y^2-2y+4=0$
(B) $4y^4-y^3+y^2-2y-4=0$
(C) $4y^4-y^3-y^2-2y-4=0$
(D) $-4y^4-y^3-y^2-2y-4=0$

37 Diminish the roots of equation $x^4-8x^3+19x^2-12x+2=0$ by 2.

(A) $y^4+5y^2+6=0$
(B) $y^4-5y^2+6=0$
(C) $y^4+5y^2-6=0$
(D) $y^4-5y^2-6=0$

38 $\sum\alpha^2=$_____.

(A) p^2+2q (B) p^2+q^2 (C) p^2-q^2 (D) p^2-2q

Atmiya University Rajkot

39 $\sum \alpha^2\beta\gamma =$ _____.

(A) p^2q (B) pr (C) pq (D) qr

40 $\sum \frac{1}{\alpha} =$ _____.

(A) $-\frac{q}{r}$ (B) $\frac{q}{r}$ (C) $\frac{r}{q}$ (D) $\frac{p}{q}$

41 If a smooth curve is drawn on a graph paper passing through the plotted points then such a curve is called _____ curve.

(A) Exact (B) accurate (C) approximating (D) none of these

42 The process of finding the equations of the curve best fit which may not be suitable for predicting the unknown value is called _____.

(A) Curve fitting
(B) Curve drawing
(C) A & B both
(D) None of these

43 What is non-linear law in graphical method?

(A) $y = ax^n$ (B) $y = ae^{bx}$ (C) $y = ab^x$ (D) all of these

44 The method of least squares is used to find a curve which passes through the _____ number of points.

(A) Minimum (B) Maximum (C) every (D) two

45 In the least squares method, error $E =$ _____.

(A) $\sum_{i=1}^{n}(y_i - f(x_i))$
(B) $\sum_{i=1}^{n}(y_i - f(x_i))^3$
(C) $\sum_{i=1}^{n}(y_i - f(x_i))^2$
(D) $\sum_{i=1}^{n}(y_i + f(x_i))^2$

46 In least squares method, if $E = 0$ then _____.

(A) All n-points will not lie on the curve $y = f(x)$
(B) All n-points will lie above the curve $y = f(x)$
(C) All n-points will lie below the curve $y = f(x)$
(D) All n-points will lie on the curve $y = f(x)$

47 In least squares method, E should be _____ to obtain the best fitting curve to the set of given points.

(A) Minimum (B) maximum (C) average (D) none of these

Atmiya University Rajkot

48 By using principal of least squares, which of the following curve can be fitted.

(A) Straight line (B) parabola (C) exponential curve (D) all of these

49 In least squares method, normal equations of straight line are _____.

(A) $\sum xy = a\sum x^2 + b\sum x$
(B) $\sum y = a\sum x + bn$
(C) A & B both
(D) A or B

50 In least squares method, normal equations of parabola are _____.

(A) $\sum x^2y = a\sum x^4 + b\sum x^3 + c\sum x^2$
(B) $\sum xy = a\sum x^3 + b\sum x^2 + c\sum x$
(C) $\sum y = a\sum x^2 + b\sum x + cn$
(D) All of above

Dr. Parag Ajani

Atmiya University
Rajkot

Semester – IV		
Course Code	Course Title	Course Credit and Hours
21BAENCC402	Core 14: Life Writing	4 Credits – 4 hrs/wk

Unit I - Introduction

Part A - One Liner Type Questions

1. True or False: Biography and autobiography are both sub-genres of life writing.
2. Life writing encompasses various sub-genres such as _____, autobiography, and travel writing.
3. What is one of the key topics discussed in Unit I? (Choose one) a) The history of drama b) The difference between comedy and tragedy c) Evolution of life writing d) Famous playwrights
4. Autobiography is a form of life writing that is written by _____.
5. True or False: Memoirs and diaries fall under the category of travel writing.
6. What are some of the literary qualities commonly associated with life writing?
7. True or False: The art of life writing has remained unchanged throughout history.
8. The sub-genre that focuses on personal experiences and reflections is _____.
9. Life writing is a genre that blurs the line between _____ and literature.
10. True or False: Travel writing is a sub-genre of drama.

Part B - Brief Question Answer

1. Explain the primary difference between a biography and an autobiography.
2. How has the art of life writing evolved over the years? Provide a brief overview.
3. Name two literary qualities commonly found in life writing and explain their significance.
4. What is the role of personal reflection in memoirs, and how does it contribute to the genre?
5. Briefly describe the key sub-genres of life writing discussed in Unit I.

Part C - Descriptive Question Answer

1. Explore the evolution of life writing as an art form, highlighting key milestones and developments in its history.
2. Compare and contrast the literary qualities of autobiography and travel writing, providing examples to illustrate your points.
3. Explain how the sub-genre of diary writing has transformed in the digital age, and discuss its continued relevance.
4. Discuss the impact of culture and society on the evolution of life writing, using specific examples from different time periods.

Unit II - Biography

Part A - One Liner Type Questions

1. True or False: Biography is a sub-genre of drama.

Atmiya University

2. Fill in the blank: "Kalpana Chawla: A Life" is a biography written by _____.
3. Biography primarily focuses on the life and experiences of _____.
4. True or False: Biographies are always written by the subject of the biography.
5. What distinguishes biography from other forms of life writing?
6. Fill in the blank: Biography is a genre that provides a _____ account of a person's life.
7. Who is the central figure or subject of "Kalpana Chawla: A Life"?
8. What are some common elements found in biographical works?
9. True or False: Autobiographies are a type of biography.
10. What literary techniques are commonly employed in biographies?

Part B - Brief Question Answer

1. Briefly explain the purpose of biographical writing and its significance in literature.
2. Who is the author of "Kalpana Chawla: A Life," and why did they choose to write about Kalpana Chawla?
3. Describe the key events or milestones in Kalpana Chawla's life that are highlighted in the biography.
4. Discuss the challenges and ethical considerations that may arise when writing a biography, using "Kalpana Chawla: A Life" as an example.
5. How does "Kalpana Chawla: A Life" contribute to our understanding of the life and achievements of Kalpana Chawla?

Part C - Descriptive Question Answer

1. Analyze the role of biographies in preserving the legacies of notable individuals in society, using examples from literature.
2. Explore the impact of cultural and historical contexts on the writing of biographies, with reference to "Kalpana Chawla: A Life."
3. Compare and contrast the storytelling techniques employed in biographies with those used in other forms of life writing, such as autobiographies or memoirs.
4. Discuss the ethical dilemmas that biographers may face when writing about real individuals, and provide examples from biographical literature to illustrate your points.

Unit III - Autobiography

Part A - One Liner Type Questions

1. True or False: Autobiography is a literary form closely related to drama.
2. Fill in the blank: "Wings of Fire" is an autobiography by _____.
3. Autobiographies are primarily written in the _____ person.
4. True or False: Autobiographies are always written by the subjects themselves.
5. What distinguishes an autobiography from a biography?
6. Fill in the blank: Autobiographies provide a firsthand account of the author's _____.
7. Who is the central figure or author of "Wings of Fire"?
8. What are some common themes explored in autobiographical works?

Atmiya University

9. True or False: Memoirs are a type of autobiography.
10. What is the significance of autobiographies in literature?

Part B - Brief Question Answer

1. Explain the primary purpose of writing an autobiography and its role in literature.
2. Who is the author of "Wings of Fire," and why did APJ Abdul Kalam choose to write his autobiography?
3. Discuss the major life events and achievements of APJ Abdul Kalam that are highlighted in "Wings of Fire."
4. What challenges and ethical considerations can arise when writing one's autobiography, as illustrated in "Wings of Fire"?
5. How does "Wings of Fire" contribute to our understanding of APJ Abdul Kalam's life and contributions?

Part C - Descriptive Question Answer

1. Analyze the impact of autobiographies in shaping our understanding of the lives and experiences of notable individuals, drawing examples from literature.
2. Explore the influence of cultural and historical contexts on the writing and reception of autobiographies, using "Wings of Fire" as a case study.
3. Compare and contrast the narrative techniques used in autobiographies with those employed in other forms of life writing, such as biographies or memoirs.
4. Discuss the ethical complexities that authors may face when writing autobiographies, especially when revealing personal and private aspects of their lives, with reference to "Wings of Fire."

Unit IV - Travel Writing

Part A - One Liner Type Questions

1. True or False: Travel writing is a sub-genre of drama.
2. Fill in the blank: "All Roads Lead to Ganga" is a travel writing piece by _____.
3. Travel writing primarily focuses on _____.
4. True or False: Travel writers always write about their own journeys.
5. What distinguishes travel writing from other forms of life writing?
6. Fill in the blank: Travel writing often provides vivid descriptions of _____.
7. Who is the central figure or author of "All Roads Lead to Ganga"?
8. What are some common elements found in travel writing?
9. True or False: Diaries are a type of travel writing.
10. What is the significance of travel writing in literature?

Part B - Brief Question Answer

1. Explain the primary purpose of travel writing and its role in literature.
2. Who is the author of "All Roads Lead to Ganga," and what motivates Ruskin Bond to write about his travels?
3. Describe some of the key destinations or experiences highlighted in "All Roads Lead to Ganga."

Atmiya University

4. Discuss the challenges and ethical considerations that may arise when writing travel narratives, using "All Roads Lead to Ganga" as an example.
5. How does "All Roads Lead to Ganga" contribute to our understanding of Ruskin Bond's travel experiences?

Part C - Descriptive Question Answer

1. Analyze the impact of travel writing in bringing readers closer to diverse cultures and places, using examples from literature.
2. Explore how the author's unique style and perspective influence the portrayal of travel experiences in "All Roads Lead to Ganga."
3. Compare and contrast the storytelling techniques employed in travel writing with those used in other forms of life writing, such as biographies or diaries.
4. Discuss the ethical dilemmas that travel writers may face when sharing personal experiences and observations, and provide examples from travel literature to illustrate your points.

Unit V - Letters

Part A - One Liner Type Questions

1. True or False: Letters are a form of travel writing.
2. Fill in the blank: The unit "Letters" features selected letters from eminent Indian personalities to _____.
3. Letters are a unique form of life writing as they are often _____.
4. True or False: Letters are primarily written for public consumption.
5. What distinguishes letters from other forms of life writing?
6. Fill in the blank: Letters provide personal insights into the thoughts and emotions of the _____.
7. Who are the eminent Indian personalities whose letters are featured in this unit?
8. What are some common elements found in personal letters?
9. True or False: Memoirs are a type of letter.
10. What is the significance of letters in literature?

Part B - Brief Question Answer

1. Explain the primary purpose of writing personal letters and their role in literature.
2. What is the significance of selected letters from eminent Indian personalities to their children, and how do they contribute to our understanding of these individuals?
3. Describe the content and themes covered in the selected letters featured in this unit.
4. Discuss the challenges and ethical considerations that may arise when sharing personal letters in a public or academic context.
5. How do the letters in this unit provide insights into the emotions and thoughts of the eminent Indian personalities?

Part C - Descriptive Question Answer

Atmiya University

1. Analyze the impact of personal letters in providing a glimpse into the lives and personalities of eminent Indian figures, drawing examples from the selected letters in this unit.
2. Explore the role of cultural and historical contexts in shaping the content and style of personal letters, using the featured letters as examples.
3. Compare and contrast the narrative techniques employed in personal letters with those used in other forms of life writing, such as autobiographies or travel writing.
4. Discuss the ethical considerations involved in sharing personal letters, especially when they involve eminent personalities, and provide examples from the unit to illustrate your points.

Atmiya University

ATMIYA UNIVERSITY

(Established under the Gujarat Private University Act 11, 2018)

Yogidham Gurukul, Kalawad Road, Rajkot - 360005, Gujarat (INDIA)

Science
Mathematics

SEM-2-Course Code-21BMTCC201 Date: 20/1/2023

Differential Equations

Question Bank

1. $(e^x + 1)\, y\, dy = (y + 1)\, e^x\, dx$. **[Agra 1996]** **Ans.** $(e^x + 1)(y + 1)$
2. $(dy/dx) - y \tan x = -y \sec^2 x$. **Ans.** $y \cos x =$
3. $x\sqrt{(1+y^2)}\, dx + y\sqrt{(1+x^2)}\, dy = 0$. **[Bangalore 1996]** **Ans.** $\sqrt{(1+x^2)} + \sqrt{(1+y^2)}$
4. $(2ax + x^2)(dy/dx) = a^2 + 2ax$. **[Kanpur 1996]** **Ans.** $x(x + 2a)^3 =$
5. $dr = a(r \sin\theta\, d\theta - \cos\theta\, dr)$. **Ans.** $r(1 + a \cos$
6. $(e^y + 1)\cos x\, dx + e^y \sin x\, dy = 0$. **[Lucknow 1992]** **Ans.** $(\sin x)(e^y +$
7. (a) $\sqrt{(a+x)}\,(dy/dx) + x = 0$. **[Rohilkhand 1995; Bundelkhand** **Ans.** $y + (2/3)(x - 2a)(a +$

   (b) $dy/dx + \sqrt{(1-y^2)/(1-x^2)} = 0$ **[Pune 2010; Bangalore 1996]** **Ans.** $\sin^{-1} x + \sin$
8. $(x^2 - yx^2)\, dy + (y^2 + xy^2)\, dx = 0$. **Ans.** $\log(x/y) - (x+y)/$
9. $(xy^2 + x)\, dx + (yx^2 + y)\, dy = 0$. **[Agra 2005, Rajsthan 2010]** **Ans.** $(x^2 + 1)(y^2 +$
10. $\sec^2 x \tan y\, dx + \sec^2 y \tan x\, dy = 0$. **[Agra 2006; Meerut 2009]** **Ans.** $\tan x \tan$
11. $(1 + x)\, y\, dx + (1 + y)\, x\, dy = 0$. **Ans.** $x + y + \log$
12. Find the function 'f' which satisfies the equation $df/dx = 2f$, given that $f(0) = e^3$. **Ans.** $f =$
13. $(1 - x^2)(1 - y)\, dx = xy(1 + y)\, dx$. **Ans.** $\log[x(1-y)^2] = \frac{1}{2}(x^2 - y^2) -$

[Jabalpur 1993; Guwahati 1996; Vikram 1992; Nagpur 2005; Agra 1992; Meerut

Atmiya University Rajkot

the following differential equations:

1. $dy/dx = (x+y)^2$. **[Nagpur 2002, Avadh 2001]** Ans. $x + c = \tan^{-1}(x+y)$

2. $dy/dx + 1 = e^{x+y}$. **[Calcutta 1996]** Ans. $x + e^{-(x+y)} = c$

3. $(2x+y+1)\,dx + (4x+2y-1)\,dy = 0$. **[Kanpur 2012; Lucknow 2011]** Ans. $2y + x + \log(2x+y-1) = c$

4. $(x-y-2)\,dx - (2x-2y-3)\,dy = 0$. Ans. $x - 2y - \log(x-y-1) = c$

5. $(x+y+1)\,(dy/dx) = 1$. **[Gorakhpur 2006; Rohilkhand 2008]** Ans. $x + y + 2 = c\,e^{y}$

6. $\sin^{-1}(dy/dx) = x+y$. **[Mysore 2004]** Ans. $-2/(x+c) = 1 + \tan\frac{1}{2}(x+y)$

7. $(2x+4y+3)\,(dy/dx) = 2y+x+1$. Ans. $4x + 8y + 5 = ce^{4x-2y}$

8. $\dfrac{4x+6y+5}{3y+2x+4}\cdot\dfrac{dy}{dx} = 1$. Ans. $(2/7)(2x+3y) - (9/49)\log(14x+21y+22) = x + c$

9. $dy/dx = (x-y+3)/(2x-2y+5)$. Ans. $x - 2y + \log(x-y+2) = c$

10. $(2x+2y+3)\,dy - (x+y+1)\,dx = 0$ or $dy/dx = (x+y+1)/(2x+2y+3)$. **[Lucknow 1998; Agra 1995; Meerut 1994]** Ans. $x + y + (4/3) = ce^{3y-2x}$

11. $(x-y)^2\,(dy/dx) = a^2$. **[Delhi Maths (G) 1999]** Ans. $y + c = (a/2)\log\{(x-y-a)/(x-y+a)\}$

Atmiya University Rajkot

$(2x^2y - 3y^4)\,dx + (3x^3 + 2xy^3)\,dy = 0$. **Ans.** $12x^{-10/13}\,y^{15/13} + 5x^{-36/13}\,y^{24/13} = c$

$(4xy^2 + 6y)\,dx + (5x^2y + 8x)\,dy = 0$. **[Delhi B.A. (Prog.) II 2012, 14]** **Ans.** $x^4y^5 + 2x^3y^4 = c$

$x(3y\,dx + 2x\,dy) + 8y^4(y\,dx + 3x\,dy) = 0$. **[Lucknow 2010]** **Ans.** $x^2y^3(x + 4y^4) = c$

$x(4y\,dx + 2x\,dy) + y^3(3y\,dx + 5x\,dy) = 0$. **[Delhi Maths (G) 1999]** **Ans.** $x^4y^3 + x^3y^5 = c$

$xy^3(y\,dx + 2x\,dy) + (3y\,dx + 5x\,dy) = 0$. **Ans.** $x^3y^5(xy^3 + 4) = c$

$(8x^2y^3 - 2y^4)\,dx + (5x^3y^2 - 8xy^3)\,dy = 0$ *by first finding integrating factor of the form* $x^h y^k$.
[Delhi, B.Sc. (Prog) II 2011] **Ans.** $x^{8/3}y^{5/3} - x^{2/3}y^{8/3} = c$

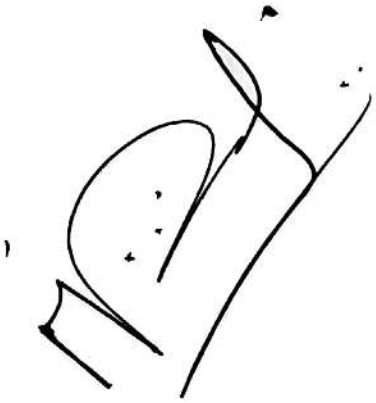

Atmiya University
Rajkot

ATMIYA University, Rajkot
Faculty of Science
Department of Mathematics
AY: 2022-23

ACADEMIC ACTIVITIES

Question Bank: BSc Mathematics Sem– 4

Subject: Fundamentals of Linear Algebra (21BMTCC401)

1 Define: Linear span

2 Define: Complementary subspace

3 Every vector space has atleast _____ subspaces.

4 Check whether $V = \mathbb{R}^3$, the set of all ordered triplets of real numbers (x, y, z) is a vector space with respect to the operations $(x_1, y_1, z_1) + (x_2, y_2, z_2) = (x_2, y_1 + y_2, z_2)$ and $k(x, y, z) = (kx, ky, kz)$, where $k \in \mathbb{R}$.

5 Check whether $W = \left\{ \begin{bmatrix} a & b \\ c & d \end{bmatrix} / \, b = a \right\}$ is subspace of $M_{2\times2}$ under standard operations?

6 Define: Wronskian

7 Determine whether there exists scalars k & l such that the vectors $u = (2, k, 6), v = (l, 5, 3), w = (1, 2, 3)$ are mutually orthogonal with respect to the Euclidean inner product.

8 Let $V = \mathbb{R}^3$ be a vector space. Let W be the subspace generated by (1,0,0) and U be the subspace generated by (1,1,0) and (0,1,1). Show that V is the direct sum of W and U.

9 If W_1 and W_2 are two subspaces of a finite dimensional vector space V then show that $\dim(W_1 + W_2) = \dim W_1 + \dim W_2 - \dim(W_1 \cap W_2)$.

10 State and prove Cauchy Schwartz's inequality.
Verify Cauchy's – Schwartz's inequality for $p_1 = -1 + 2x + x^2$, $p_2 = 2 - 4x^2$ using inner product $\langle p_1, p_2 \rangle = a_0 b_0 + a_1 b_1 + a_2 b_2$.

11 Define: Linear combination

12 Check whether the following set of matrices $\begin{bmatrix} 1 & 1 \\ 1 & 2 \end{bmatrix}, \begin{bmatrix} 1 & 0 \\ 0 & 2 \end{bmatrix}, \begin{bmatrix} 0 & 3 \\ 1 & 2 \end{bmatrix}, \begin{bmatrix} 2 & 6 \\ 4 & 6 \end{bmatrix}$ sin $M_{2\times2}$ are L.D. or L.I.?

13 State the necessary condition for a non-empty subset W of a vector space V to be a subspace of V.

14 Check whether $W = \{a_0 + a_1x + a_2x^2 / \ a_0 = a_1 + a_2\}$ is a subspace of P_2 under the standard operations?

15 Standard basis of $\mathbb{R}^2 =$ _____.

16 Find the coordinate vector of $p = 4 - 3x + 2x^2$ relative to the basis $S = \{1 + x + x^2, 1 + x, 1\}$ for P_2.

17 Define: angle between two vectors in an inner product space

18 Let $C[0,1]$ be the vector space of all continuous real valued functions defined on $[0,1]$. Then show that $\langle f, g\rangle = \int_0^t f(t)\, g(t)dt, \forall f, g \in C[0,1]$ is an inner product in $C[0,1]$.

19 V is a vector space. For $v_1, v_2, v_3, \ldots, v_n \in V$, $SP\{v_1, v_2, v_3, \ldots, v_n\} = V$. If $w_1, w_2, \ldots, w_m$ are linearly independent vectors of V then prove that $m \leq n$.

20 Define: coset with example

21 $\dim P_{10} =$ _____.

22 If $W_1 = \{(x - y, y + z, y, z) / \ x, y, z \in \mathbb{R}\}$ and $W_2 = \{(x, x + y, x + y + z, y - z) / \ x, y, z \in \mathbb{R}\}$ be two subspaces of $\mathbb{R}^4$. Then find $\dim W_1 + W_2$, $\dim W_1 \cap W_2$, $\dim W_1$ and $\dim W_2$.

23 Define: Field

State and prove properties of vector space.

24 If $u = (5,4)$ and inner product is defined as $\langle u, v\rangle = u_1v_1 + u_2v_2$ then find $\|u\|$.

25 Apply Gram – Schmidt orthogonalization process to the basis vectors $(1,2,1), (1,0,1), (3,1,0)$ of $\mathbb{R}^3$ to obtain an orthonormal basis of $\mathbb{R}^3$ with the standard inner product.

Dr. Parag Ajani

Atmiya University Rajkot

ATMIYA UNIVERSITY, Rajkot
Faculty of Science
Department of Mathematics

Question Bank
Academic Year: 2022-23

Program: **B.Sc. Mathematics** Semester: **IV**

Course Code: **21BMTCC402** Course: **Integral and Vector Calculus**

Part A

1. Evaluate $\int_0^a \int_0^{\sqrt{a^2-x^2}} x^2 + y^2 \, dx \, dy$ by changing into polar coordinates.
2. Evaluate $\iint_R x^2 dA$ where R is a region in the first quadrant bounded by the hyperbola $xy = 16$ and the lines $y = x, x = 4$ and $x = 8$.
3. Evaluate $\int_0^1 \int_0^{\sqrt{1-x^2}} \int_0^{\sqrt{1-x^2-y^2}} xyz \, dx \, dy \, dz$.
4. Evaluate $\iiint_V z(x^2 + y^2) dV$ over the volume of the cylinder $x^2 + y^2 = 1$ intersected by the planes $z = 2$ and $z = 3$.
5. Evaluate $\iint_R x + y \, dA$, where R is the rectangular region with vertices $(0,0), (5,0), \left(\frac{5}{2}, \frac{5}{2}\right)$ and $\left(\frac{5}{2}, -\frac{5}{2}\right)$ using the transformations $x = 2u + 3v, y = 2u - 3v$.
6. Change the order of integration and hence evaluate: $\int_0^1 \int_0^{\sqrt{1-x^2}} \frac{e^y}{(e^y+1)\sqrt{1-x^2-y^2}} dydx$.
7. Evaluate $\int_0^1 \int_0^{\sqrt{1-x^2}} \int_0^{\sqrt{1-x^2-y^2}} \frac{1}{\sqrt{1-x^2-y^2-z^2}} dxdydz$ by changing into spherical coordinates.
8. Let V be the solid region bounded below by the cone $z = \sqrt{x^2 + y^2}$ and above by the paraboloid $z = 2 - x^2 - y^2$. Find the volume of V using cylindrical coordinates.
9. Write the relation between cartesian coordinates and cylindrical coordinates.
10. The transformations $x + y = u, y = uv$ transform the area element $dy \, dx$ into $|J| \, du \, dv$, where $|J|$ is equal to_____.
11. $\int_1^4 \int_2^3 \int_1^3 dx \, dy \, dz =$ _____.
12. In cylindrical co-ordinates, $dx \, dy \, dz$ is equal to_____.
13. Define: Laplace Transformation.
14. State: Convolution theorem.
15. Define: Solenoidal.
16. Define: Irrotational.
17. State: Green's theorem.
18. Define: Conservative field.
19. Show that $\int_0^1 \int_0^1 \frac{x-y}{(x+y)^3} dx \, dy \neq \int_0^1 \int_0^1 \frac{x-y}{(x+y)^3} dy \, dx$.
20. Evaluate $\iint e^{ax+by} dx \, dy$, over the triangle bounded by $x = 0, y = 0, ax + by = 1$.
21. Evaluate $\iiint x^2yz \, dx \, dy \, dz$ over the region bounded by the planes $x = 0, y = 0, z = 0$ and $x + y + z = 1$.
22. Evaluate $\int_0^2 \int_1^z \int_0^{yz} xyz \, dx \, dy \, dz$.
23. If $f = x^2yz \, i + xy^2z \, j + xyz^2 \, k$ then find $\nabla \times f$ at (1,2,3).

Atmiya University Rajkot

24 For a function f whose second order derivative exists, prove that its curl is solenoidal.

25 Find the Laplace transform of $2t^3 + e^{-2t} + t^{\frac{4}{3}}$.

26 State and prove first shifting theorem.

27 If $F = (2xy + z^3)i + x^2\, j + 3xz^2\, k$, then show that $\oint_C F\, dr$ is independent of path of integration. Also evaluate the integral when C is any path joining $A(1,-2,1)$ and $B(3,1,0)$.

28 Find the work done when a force $F = (x^2 - y^2 + x)i - (2xy + y)j$ moves a particle in the $xy-$ plane from (0,0) to (1,1) along the parabola $y^2 = x$.

29 Change the order of integration and evaluate $\int_0^1 \int_{x^2}^{2-x} xy\, dxdy$.

30 Evaluate $\iint \sqrt{\frac{1-x^2-y^2}{1+x^2+y^2}}\, dx\, dy$ over the first quadrant of the circle $x^2 + y^2 = 1$.

31 Evaluate $\iiint \sqrt{1 - \frac{x^2}{a^2} - \frac{y^2}{b} - \frac{z^2}{c^2}}\, dx\, dy\, dz$, where V is the volume of the ellipsoid $\frac{x^2}{a^2} + \frac{y^2}{b^2} + \frac{z^2}{c^2} = 1$.

32 Evaluate $\iiint x^2y^2z^2\, dx\, dy\, dz$, over the region bounded by the surfaces $xy = 4, xy = 9, yz = 1, yz = 4, zx = 25, zx = 49$.

33 If f and g are irrotational functions on D, then show that $f \times g$ is a solenoidal function.

34 Prove in usual notations, $div(r^n\, \bar{r}) = (n+3)r^n$.

35 Find $L^{-1}\left(\frac{5s^2+3s-16}{(s-1)(s-2)(s+3)}\right)$.

36 Find $L(t^3 \cosh 2t)$.

37 Verify Green's theorem for $\oint_C (xy + y^2)dx + x^2 dy$ where C is a curve formed by $y = x^2$ & $y = x$.

38 Verify Green's theorem for $\oint_C (x - y)dx + 3xydy$ where C is a curve formed by $x^2 = 4y$ & $y^2 = 4x$.

Atmiya University Rajkot

ATMIYA UNIVERSITY

Question Bank

Faculty of Science

B.Sc. Mathematics

21BMTCL401 – Basics of Number Theory

Semester – IV

Part A

Answer **ALL** questions

1. State: Well ordering principle.
2. Is addition is commutative for elements of Z?
3. Define: GCD.
4. If $(a, b) = d$ then $\left(\frac{a}{d}, \frac{b}{d}\right) = 1$.(True/False)
5. Give an example of linear Diophantine equation.
6. Write a application of Euclidean algorithm.
7. Give an example of palindromic prime.
8. State: Euclid's theorem.
9. Define: Symmetric law for congruent relation.
10. Is $41|2^{20} - 1$?
11. State: Pigeonhole Principle.
12. Is multiplication is commutative for elements of Z?
13. Define: LCM
14. If $(a, b) = d$ then $\frac{a}{d}$ and $\frac{b}{d}$ are relatively prime.(True/False)
15. Define: Linear Diophantine equation.
16. Write one application of Euclidean algorithm.
17. Give an example of twin prime.
18. State: Euclid's theorem
19. Define: Reflexive law for congruent relation.
20. Is 41 divides $2^{20} - 1$?

Part B

Answer **ALL** questions

1. Use mathematical induction to prove that $\sum_{k=1}^{n} k = \frac{n(n+1)}{2}, \forall n \in N$.
2. Use mathematical induction to prove that $\sum_{k=1}^{n} 2k = n^2 + n, \forall n \in N$.
3. Show that if m is an integer then 3 divides $m^3 - m$.
4. Convert $(9A0B)_{16}$ to binary notation and convert 214 to base 3.
5. Find greatest common divisor of 136, 221, and 391.
6. Find the least common multiple of 8, 12, 15, 20 and 25.
7. Find $\emptyset(99)$ and $\emptyset(32)$.
8. Use the Sieve of Eratosthenes to find all prime less than 100.
9. Find the remainder when 2^{340} is divided by 341.

Atmiya University Rajkot

10. Find the remainder when 3^{247} is divided by 17.
11. Use Mathematical induction to prove that $2^n < n!$ for $n \geq 4$.
12. Use Mathematical induction to prove that $1 + 4 + \cdots + (3n - 2) = \frac{n(3n-1)}{2}$.
13. Convert $(7482)_{10}$ to base 6 notation.
14. Find the least common multiple of 412 and 32.
15. Express 29 as a linear combination of 4147 and 10672.
16. Find the greatest common divisor of 4147 and 10672.
17. Find the gcd and lcm of 240 and 610 using prime factorization.
18. Find the number of integers k in the range $1 \leq k \leq 560$ for which the greatest common divisor $gcd(560, k)$ is equal to 1.
19. Find the remainder when 3^{247} is divided by 17.
20. Find the remainder when $1! + 2! + \cdots + 1000!$ is divided by 15!.

Part C

Answer **ALL** questions

1. State and prove the Binomial theorem.
2. State and prove the principle of weak induction.
3. State and prove any two properties of greatest common divisor.
4. Find greatest common divisor of 256 and 1166 and express it as a linear combination of 256 and 1166.
5. State and prove Euclidean algorithm.
6. State and prove necessary and sufficient condition for solution of linear Diophantine equation.
7. If p is prime and $p|a_1a_2 \cdots a_n$ then show that $p|a_i$ for some $i = 1,2, \ldots, n$.
8. Show that the primes are infinitely many.
9. If f denote a polynomial with integral coefficients. If $a \equiv b(mod\ m)$ then show that $f(a) \equiv f(b)(mod\ m)$.
   Prove that $n^6 - 1$ is divisible by 7 if $(n, 7) = 1$.
10. State and prove the principle of weak induction.
11. Give an example of commutative ring with unity. (with explanation)
12. State and prove the division algorithm.
13. Write any two properties of the greatest common divisor.
14. State and prove necessary and sufficient condition for solution of linear Diophantine equation.
15. Write a notes on application of Fermat's theorem.
16. State and prove the fundamental theorem on arithmetic.
17. If a prime p divides the product of $a_1, a_2, \ldots, a_n$ then show that p divides at least one of the a_i for some $i = 1,2, \ldots, n$.
18. Show that congruence relation is an equivalence relation.
19. Solve $863x \equiv 880(mod\ 2151)$.
20. State any five conjecture.

ATMIYA UNIVERSITY

(Established under the Gujarat Private University Act 11, 2018)

Yogidham Gurukul, Kalawad Road, Rajkot - 360005, Gujarat (INDIA)

Science

Mathematics

SEM-4-Course Code-21UFEDE407

DSE-2: PROBABILITY AND DISTRIBUTIONS

UG-Semester IV

Question Bank

Department: Mathematics

1 Obtain the two regression lines and correlation coefficient form the following:

x	6	2	10	4	8
y	9	11	5	8	7

2 Calculate the coefficient of correlation between the ages of cares and annual maintenance costs:

Age of cars(year)	2	4	6	7	8	10	12
Annual maintenance cost (Rs.)	1600	1500	1800	1900	1700	2100	2000

3 A card is drawn from a well shuffled pack of 52 cards. Find the probability of (i) getting a king card (ii) getting a face card (iii) getting a face card (iv) getting a red card (v) getting a card between 2 and 7, both inclusive and (vi) getting a card between 2 and 8 , both exclusive.

4 Out of 800 families with 5 children each, how many would you expect to have (i) 3 boys? (ii) 5 Girls? (iii) Either 2 or 3 boys? (iv) At least on boy? Assume equal probabilities for boys and girls.

5 The number of accidents in a year attributed to taxi drivers in a city follows Poisson distribution with a mean of 3. Out of 1000 taxi drivers, find approximately the number of drivers with (i) no accidents in a year, and (ii) more than 3 accidents in a year.

6 If X is a Poisson variate such that $P(X = 2) = 9P(x = 4) + 90P(X = 6)$. Find (i) mean of X, (ii) The variance of X, (iii) $P(X < 2)$, (iv) $P(X > 4)$, and (V) $P(X \geq 1)$.

7 Nine students secured following marks:

Roll no.	1	2	3	4	5	6	7	8	9
Marks in Mathematics	78	36	98	25	75	82	90	62	65
Marks in accounts	84	51	91	60	68	62	86	58	53

Comment on the value of R.

8 Calculate the correlation coefficient between x and y using the following data:

x	2	4	5	6	8	11
y	18	12	10	8	7	5

9 If A *and* B are two events such that $P(A) = \frac{3}{8}, P(B) = \frac{5}{8}$ and $P(A \cup B) = \frac{3}{4}$, find $P(A/B)$ and $P(B/A)$. Show that whether A and B are independent.

10 If random variable has probability density function $f(x)$ as

Atmiya University Rajkot

$$f(x) = \begin{cases} 2e^{-2x}, & x > 0 \\ 0, & x \leq 0 \end{cases}$$

Find the probabilities that it will take on a value (i) between 1 and 3 and (ii) greater than 0.5.

11 A discrete random variable has the probability mass function given below:

X	-2	-1	0	1	2	3
$P(X = x)$	0.2	k	0.1	$2k$	0.1	$2k$

Find k, mean, and variance.

12 If two cards are drawn from a pack of 52 cards which are diamonds, using Poisson distribution, find the probability of getting two diamonds at least 3 times in 51 consecutive trails of two cared drawing each time.

13 Verify that the function $F(x)$ is a distribution function.

$$f(x) = \begin{cases} 0, & x < 0 \\ 1 - e^{-\frac{x}{4}}, & x \geq 0 \end{cases}$$

Also, find the probabilities $P(X \leq 4), P(X \geq 8), P(4 \leq X \leq 8)$.

14 A random variable X has the following probability function:

x	0	1	2	3	4	5	6	7
$P(x)$	0	k	$2k$	$2k$	$3k^2$	k^2	$2k^2$	$7k^2 + k$

(i) Determine k (ii) Evaluate $P(X < 6)$, $P(X \geq 6)$, $P(0 < X < 5)$ and $P(0 \leq X \leq 4)$ (iii) Determine the distribution function of X (iv) Find mean (v) Find the variance.

15 Seven unbiased coins are tossed 128 times and the number of head obtained is noted as given below:

No. of heads	0	1	2	3	4	5	6	7
Frequency	7	6	19	35	30	23	7	1

Fit a binomial distribution to the data.

Atmiya University Rajkot

B.Tech. SEM.-III
Subject: Database Management System(23UGCE301)
Question Bank

Unit: 1

Sr. No.	Question	Mark
1	Explain responsibility of DBA in detail.	4
2	Explain three level Data abstraction.	4
3	Explain Different types of Keys in DBMS with examples.	4
4	Explain Specialization, Generalization and Aggregation with diagrams.	7
5	Explain advantages of DBMS over file management systems.	7
6	Explain Weak entity set and Strong entity set.	4
7	Explain disadvantages of the file system compared to the Database management system.	7
8	Explain applications of DBMS	4
9	Explain Data Models in brief.	4

Atmiya University

Unit: 2

Sr. No.	Question	Mark
1	What is Relational Algebra? Explain selection, Projection and Cartesian product operation.	4
2	What is normalization? What is the need of it? Also Explain 1NF,2NF and 3NF with examples.	7
3	Define functional dependency. Explain different types of FD with the help of example.	7
4	What Is decomposition? Explain different types of decomposition.	7
5	Describe Structure of relational databases.	4
6	Explain closure of FD set	4

Atmiya University

Unit: 3

<table>
<tr><th>Sr. No.</th><th>Question</th><th>Mark</th></tr>
<tr><td>1</td><td>Explain State Transition Diagram.</td><td>4</td></tr>
<tr><td>2</td><td>Define Locking. Explain lock-based protocol.</td><td>7</td></tr>
<tr><td>3</td><td>Find out the following schedule is Conflict Serializable or not. And also describe its steps.
<table>
<tr><td>T1</td><td>T2</td></tr>
<tr><td>R(A)</td><td></td></tr>
<tr><td></td><td>R(A)</td></tr>
<tr><td></td><td>R(B)</td></tr>
<tr><td></td><td>W(B)</td></tr>
<tr><td>R(B)</td><td></td></tr>
<tr><td>W(A)</td><td></td></tr>
</table></td><td>4</td></tr>
<tr><td>4</td><td>What is a transaction? List and explain ACID property of transaction with example.</td><td>4 or 7</td></tr>
<tr><td>5</td><td>Explain conflict serializability and view serializability with Example.</td><td>7</td></tr>
<tr><td>6</td><td>What are the three problems due to concurrency? How the problems can be avoided.</td><td>4</td></tr>
</table>

Atmiya University

Unit: 4

Sr. No.	Question	Mark
1	Explain system recovery procedure with Checkpoint record concept.	7
2	Explain Shadow Paging Technique.	4
3	Explain working of two-phase commit protocol.	4
4	Explain Query Processing in detail.	7
5	Explain Deferred Database Modification log-based recovery method.	7
6	Discuss Immediate Database Modification log based recovery method.	7
7	What is a deadlock? Explain wait-for-graph. When does it occur?	7
8	Explain deadlock Detection, Recovery and prevention methods.	7

Atmiya University

Unit: 5

Sr. No.	Question	Mark
1	What are SQL Constraints? And also explain its types.	4
2	Explain TCL Commands with syntax and examples.	4
3	Explain Aggregate Functions with syntax and examples.	4
4	Explain Order by, group by and Having with syntax and example.	7
5	Explain Numeric and String Functions.	4
6	Explain View and its types with syntax and examples.	7
7	What is Join? Define its types. And explain Inner join in detail.	7

Atmiya University

Faculty of Engineering and Technology
Department of Computer Engineering

Digital Electronics(23UGEC301)
Questions Bank for 1 marks

	UNIT-1
1	Convert $(102)_{10}$ into ($)_2$.
2	Convert $(1001)_2$ into ($)_{10}$.
3	Convert $(56)_8$ into ($)_2$.
4	Convert $(2A)_{16}$ into ($)_2$.
5	$(15)_{10} – (10)_{10}$ using 1's compliment.
6	$(15)_{10} – (10)_{10}$ using 2's compliment.
7	$(10)_{10} – (15)_{10}$ using 1's compliment.
8	$(10)_{10} – (15)_{10}$ using 2's compliment.
9	$(101101)_2$ to grey code.
10	(1011101)grey to binary.
	UNIT-2
11	Implement Not gate using NAND gate.
12	Implement AND gate using NAND gate.
13	Implement OR gate using NAND gate.
14	Implement Not gate using NOR gate.
15	Implement AND gate using NOR gate.
16	Implement OR gate using NOR gate.
17	Reduce Boolean function-----y=A'+AB
18	Reduce Boolean function-----y=A+A'B
19	What is SOP?
20	What is POS?
	UNIT-3
21	What is combination circuit.
22	What half adder.
23	What is full adder?
24	What is half subtractor.
25	What is full subtractor.
26	What is MUX?
27	What is De-mux?
28	What is encoder?

Atmiya University

29	What is decoder?
30	What is priority encoder?
UNIT-4	
31	What is sequential circuit.
32	What isSR flip-Flop?
33	What isD flip-Flop?
34	What isJK flip-Flop?
35	What isT flip-Flop?
36	What is synchronous counter?
37	Give difference between synchronous counter and Asynchronous counter.
38	What is Asynchronous counter?
39	What is registor?
40	What is flip-flop.
UNIT-5	
41	What is logic families?
42	Explain various terminology used for logic families.
43	What is ECL?
44	What is TTL?
45	What is CMOS?
46	What noise?
47	What noise margin?
48	What noise immunity?
49	What is propagation delay?
50	What is power dissipation?

Digital Electronics
Questions Bank

UNIT-1		**Marks**
1	Different types of number system conversion.	4
2	Miscellaneous example of number system.	4

Atmiya University

3	What is radix for number system? Derive number system for r=11.	4
4	Explain 1's compliment.	4
5	Explain 2's compliment.	4
6	Example of 1's compliment.	7
7	Example of 2's compliment.	7
8	Explain various binary codes.	7
9	Explain binary to gray conversion.	7
10	Explain gray to binary conversion.	7
UNIT-2		
11	Explain NAND as universal gate.	4
12	Explain NOR as universal gate.	4
13	Various circuit implementations using NAND gate.	4
14	Various circuit implementations using NOR gate.	4
15	Explain various law for Boolean algebra.	4
16	Explain de'morgan's rule.	7
17	Various example on Boolean algebra.	7
18	Explain K-map for 5 varible.	7
19	Example of K-map for SOP form.	7
20	Example of K-map for POS form.	7
UNIT-3		
21	What is combination circuit.	4
22	Various circuit implementation of combinational circuit.	4
23	Explain half adder.	4
24	Explain half subtractor.	4
25	Explain full adder.	4
26	Explain full subtractor.	7
27	Explain MUX of various types.	7
28	Explain De-MUX of various types.	7
29	Explain Encoder of various types.	7
30	Explain Decoder.	7
UNIT-4		
31	What is sequential circuit.	4
32	Explain SR flip-Flop.	4
33	Explain D flip-Flop.	4
34	Explain JK flip-Flop.	4
35	Explain T flip-Flop.	4

Atmiya University

36	Explain synchronous up counter.	7
37	Explain synchronous down counter.	7
38	Explain Asynchronous up counter.	7
39	Explain Asynchronous down counter.	7
40	Explain various type of register.	7
UNIT-5		
41	Explain logic families.	4
42	Explain various terminology used for logic families.	4
43	Explain ECL families in detail.	4
44	Explain TTL families in detail.	4
45	Explain CMOS families in detail.	4
46	Compare ECL,TTL,CMOS logic families.	7
47	Explain limitation of ECL logic families.	7
48	Explain limitation of TTL logic families.	7
49	Explain limitation of ECL logic families.	7
50	Explain future and scope of logic families.	7

Atmiya University

Faculty of Engineering and Technology
Department of Computer Engineering

Data Structure(23UGCE302)

Question Bank

Chapter 1: Introduction to Data Structure and FILE

7 Marks Questions:

1. Discuss the importance of data structures in programming languages. Provide examples illustrating their significance.
2. Explain the concept of abstraction in data structures. How does it help in managing complex information?
3. Differentiate between primitive and non-primitive data structures. Provide examples of each.
4. How does the FILE structure in C support file handling operations? Explain with examples.

4 Marks Questions:

1. Explain the term "data structure" and its significance in programming.
2. Compare and contrast arrays and structures in C programming.
3. Describe the role of pointers in manipulating data structures in programming.
4. Discuss the importance of time complexity analysis in data structures and algorithms.

1 Mark Questions:

1. Define a data structure.
2. What is the primary purpose of using data structures?
3. Mention one example of a non-primitive data structure.
4. How does abstraction help in data structures?

Chapter 2: Linear Data Structure - Stack, Queue

7 Marks Questions:

1. Compare and contrast the operations and implementation of stacks and queues.
2. Explain the concept of a circular queue. How is it different from a regular queue?
3. Discuss the applications of stacks and queues in real-world scenarios.
4. How does the stack data structure facilitate the evaluation of postfix expressions?

4 Marks Questions:

1. Illustrate the working of the stack data structure with a diagram.
2. Discuss the working principles of priority queues. Provide an example.
3. Describe the FIFO (First-In-First-Out) principle in queues with an example.
4. Explain the LIFO (Last-In-First-Out) principle using stacks.

Atmiya University

1 Mark Questions:

1. What is the primary difference between a stack and a queue?
2. Define the term "priority queue."
3. State one application of a queue data structure.
4. Explain the term "LIFO" in the context of stacks.

Chapter 3: Linear Data Structure - Linked List

7 Marks Questions:

1. Compare singly linked lists and doubly linked lists. Discuss their advantages and disadvantages.
2. Explain how nodes are inserted and deleted in a linked list. Discuss their time complexities.
3. Differentiate between linear linked lists and circular linked lists. Provide examples.
4. Discuss the concept of self-referential structures and their role in implementing linked lists.

4 Marks Questions:

1. Illustrate the traversal of a linked list.
2. Compare arrays and linked lists in terms of their memory allocation.
3. Discuss the applications of linked lists in various domains.
4. Explain the term "header node" in the context of linked lists.

1 Mark Questions:

1. Define a linked list.
2. What is the significance of a pointer in a linked list?
3. Provide an example of a circular linked list.
4. Explain the term "node" in the context of linked lists.

Chapter 4: Nonlinear Data Structure - Tree and Graph

7 Marks Questions:

1. Discuss the properties and various traversal techniques of binary trees.
2. Explain the concept of binary search trees (BSTs) and their advantages.
3. Define graphs and describe their different representations.
4. Compare and contrast breadth-first search (BFS) and depth-first search (DFS) algorithms.

4 Marks Questions:

1. Discuss the applications of trees and graphs in real-world scenarios.
2. Explain the importance of balanced trees in data structures.
3. Differentiate between trees and graphs.
4. Illustrate the representation of a graph using an adjacency matrix.

Atmiya University

1 Mark Questions:

1. Define a binary tree.
2. State one application of binary search trees.
3. Explain the term "graph" in data structures.
4. Differentiate between BFS and DFS.

Chapter 5: Sorting, Searching, and Hashing

7 Marks Questions:

1. Compare and contrast various sorting algorithms in terms of time complexity and efficiency.
2. Explain the working principles of linear search and binary search algorithms.
3. Discuss the concept of hashing and its applications in data storage.
4. Describe different collision resolution techniques in hashing.

4 Marks Questions:

1. Discuss the importance of sorting algorithms in data manipulation.
2. Compare linear search and binary search with their time complexities.
3. Explain the concept of hash tables and their operations.
4. Discuss open addressing in the context of collision handling in hashing.

1 Mark Questions:

1. Define sorting.
2. State the time complexity of linear search.
3. Explain the term "hashing" in data structures.
4. Mention one collision resolution technique in hashing.

Atmiya University

Faculty of Engineering and Technology
Department of Computer Engineering

Fundamentals of Electronics(23UGEE101)
Question bank for 1 mark

	UNIT-1
1	Define: Intrinsic Semiconductor
2	Define: Extrinsic Semiconductors
3	Define: Holes
4	Define: Doping
5	Define: Majority charge carrier
6	Define: Minority charge carrier.
7	What is forward biasing of diode?
8	What is reverse biasing of diode?
9	What is avalanche breakdown?
10	What is PIV?
	UNIT-2
11	What is BJT?
12	How many junction are there in BJT?
13	Explain term TRANSISTOR.
14	What is cut off region?
15	What is saturationregion?
16	What is activeregion?
17	When transistor act as switch?
18	When transistor act as amplifier?
19	What is FET?
20	What is difference between FET and BJT?
	UNIT-3
21	What is op-amp?
22	What is CMRR?
23	What is input impedance in op-amp?
24	What is output impedance in op-amp?
25	What is input offset voltage in op-amp?
26	What is input bias current in op-amp?
27	What is slew rate in op-amp?
28	What is PSRR?
29	What is voltage gain in op-amp?
30	What is virtual ground in op-amp?

UNIT-4	
31	List universal gate.
32	Why NAND and NOR are called universal gates?
33	Implement NOT gate using NAND gate.
34	Implement AND gate using NAND gate.
35	Implement OR gate using NAND gate.
36	Implement NOT gate using NOR gate.
37	Implement AND gate using NOR gate.
38	Implement OR gate using NOR gate.
39	What is sequential circuit?
40	What is combinational circuit?
UNIT-5	
41	What is simplex communication?
42	What is half duplex communication?
43	What is full duplex communication?
44	What is analog communication?
45	What is digital communication?
46	What is baseband communication?
47	What is modulation in communication system?
48	List different types of modulation technique used in communication.
49	What is amplitude modulation?
50	What is frequence modulation?

Fundamentals of Electronics
Question bank

	UNIT-1	Marks
1	How are majority and minority charge carriers generated in the semiconductor material?	4
2	Justify – “Semiconductors have negative temperature coefficient of resistance.” (i.e. with increase in temperature the resistance decreases)	4
3	Explain diode in unbiased condition. Clearly define depletion region and barrier potential.	4
4	Explain diode in forward bias and reverse bias condition.	4
5	Discuss V-I characteristics of pn junction diode in detail.	4
6	A full waver rectifier using two diodes having forward resistance of 20 Ω each. The RMS voltage on secondary of the transformer is 100 V. If the load	7

Atmiya University

	resistance is 980 Ω find (a)peak input voltage to rectifier circuit (b) average value of load current (c)RMS value of load current (d)rectification efficiency. (Ans: 70.7 V, 45 mA, 50 mA, 79.38%)	
7	A bridge full waver rectifier is designed using transformer of turn ratio 4:1. The transformer is fed with AC supply of 230 V RMS and 50 Hz. Considering diode to be ideal and load resistance of 200 Ω find (a)maximum secondary voltage (b)dc output voltage (c)RMS value of load current (d)PIV rating diode required (e)output frequency. (Ans: 81.3 V, 51.7 V, 0.29 A, 81.3 V, 100 Hz)	7
8	Determine the RMS value of secondary voltage of a transformer which provides 9 V dc output voltage when connected to a bridge rectifier. If the secondary winding resistance is 3 ▸ and diode forward resistance is 1 ▸ what will be the average current flowing through the load of 90 ▸ connected to the power supply ? (Ans: 10 V, 67.7. mA)	7
9	Explain the phenomenon of Avalanche break down in detail. What does PIV rating of diode mean?	7
10	Discuss 1st, 2nd and 3rd approximation of pn junction diode in detail.	7
UNIT-2		
11	Explain in detail half adder circuit with truth table and the circuit diagram.	4
12	Explain the structure of 4-bit parallel adder.	4
13	Explain the difference between a multiplexer and demultiplexer circuit.	4
14	Explain the difference between a combinational and a sequential circuit. Give example of each.	4
15	Explain clearly the difference between an encoder and a decoder in terms of its architecture and use.	4
16	Explain how a full adder circuit can be designed using two half adder circuit.	7
17	In digital system what is combinational circuit? explain full adder circuit with truth table, Boolean equation, and the circuit diagram.	7
18	Show that a full subtractor can be constructed using two half subtractor and an OR gate.	7
19	Explain full subtractor circuit with truth table, Boolean equation, and the circuit diagram.	7
20	Draw the logic diagram of clocked RS Flip-Flop and explain its operation	7
UNIT-3		
21	What are sequential circuit? Give the circuit diagram and truth table of clocked D flip flop.	4
22	State use of multiplexer circuit in digital system. Explain a 4×1 multiplexer with truth table, Boolean equation, and the circuit diagram.	4
23	State use of De-multiplexer circuit in digital system. Explain a 1×4 De-multiplexer with truth table, Boolean equation, and the circuit diagram.	4

Atmiya University

24	State use of decoder circuit in digital system. explain 2:4 decoder with truth table, Boolean equation, and the circuit diagram.	4
25	Realize Ex-OR operation using (a) only NAND gate (b) only NOR gate.	4
26	What is combinational circuit? Explain in detail half adder and full adder circuits.	7
27	What is combinational circuit? Explain in detail half subtractor and full subtractor circuits.	7
28	Explain the phenomenon of Avalanche break down in detail. What does PIV rating of diode mean?	7
29	Discuss 1st, 2nd and 3rd approximation of pn junction diode in detail.	7
30	Draw the block diagram of a DC power supply and explain function of each block.	7
	UNIT-4	
31	Which logic gate is called coincidence gate? Justify.	4
32	Give the IC number of following TTL gates: AND, OR, NOT, NAND, NOR, X-OR and X-NOR.	4
33	Which logic gate is called anti-coincidence gate? Justify.	4
34	What are the types of Logic gates?	4
35	Write the Boolean expression for the output (Q) of the system shown in figure below 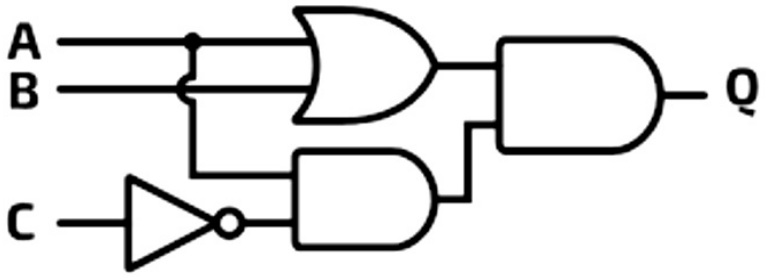	4
36	Give Boolean expression of output, schematic symbol, and truth table of AND, OR, NOT, NAND, NOR, Ex-OR, and Ex-NOR Gates.	7
37	Why NAND gate is called universal gate? Design basic logic gate using only NAND gates.	7
38	Why NOR gate is called universal gate? Design basic logic gate using only NOR gates.	7
39	State and prove De morgan's theorem using truth table.	7
40	Explain in detail half subtractor circuit with truth table and the circuit diagram.	7
	UNIT-5	

Atmiya University

41	Give circuit of center tapped full wave rectifier, sketch input-output waveform and derive the relations of Average and RMS values of output current and voltage.	4
42	Give circuit of bridge full wave rectifier, sketch input-output waveform and derive the relations of Average and RMS values of output current and voltage.	4
43	Draw the circuit and input-output waveform of half-wave rectifier, center tapped full wave rectifier and bridge full wave rectifier. Discuss about PIV rating of diodes required in all these rectifiers.	4
44	In context to rectifier explain following: 1)Ripple factor 2) Rectification efficiency. Give their values for half-wave rectifier, center tapped full wave rectifier and bridge full wave rectifier.	4
45	What are filter circuits? Explain shunt capacitive filter and choke filter in detail.	4
46	Sketch center tapped rectifier with shunt capacitive filter and sketch output waveform with and without filter.	7
47	Sketch different configuration of filter circuits popularly used with rectifiers.	7
48	Give Boolean expression of output, schematic symbol and truth table of AND, OR, NAND, NOR, NOT, Ex-OR and Ex-NOR Gates.	7
49	Write the Boolean expression for the output of the system shown in figure below. Also prepare truth table for the same. 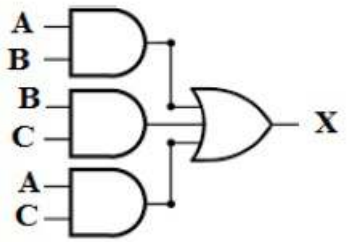	7
50	Why NAND and NOR gates are called Universal gates? Design AND and OR gate using a) only NAND and b) only NOR gates.	7

Atmiya University

ATMIYA UNIVERSITY, Rajkot

Faculty of Science
Department of Mathematics
Question Bank
Academic Year: 2022-23

Program: **M.Sc. Mathematics** Semester: **I**

Course Code: **21MMTCC104** Course: **Theory of Differential Equations**

Part A

1. Define Regular Singular point.
2. Solve: $\frac{dy}{dx} = e^{x-y} + x^2e^{-y}$.
3. $P_n(1)$=_____.
4. Define Bessels Equation.
5. Find the solution of the differential equation $\frac{d^3y}{dx^3} + y = 0$.
6. Define Lagrange's equation.
7. Define Hyper geometric function.
8. The complete integral of the form $f(p, q) = 0$ is _____.

Part B

9. Write the method of variation of parameters for second order non-homogeneous linear differential equation.
10. Write the method of elimination for solving ordinary simultaneous differential equation with constant coefficients.
11. Prove that $J_{-n}(x) = (-1)^n J_n(x)$.
12. Express $2 - 3x + 4x^2$ in terms of Legendre Polynomial of first kind with degree 2.
13. Solve: $\frac{dx}{dt} - 7x + y = 0, \frac{dy}{dt} - 2x - 5y = 0$.
14. Prove that $P_n(-x) = (-1)^n P_n(x)$.
15. Find ordinary point, singular point and regular singular point for the differential equation $(x^2 - 9)^2y'' + (x - 3)y' + 2y = 0$.
16. Solve: $\frac{dx}{dt} - y = t, \frac{dy}{dt} + x = 1$.
17. Prove that $\frac{d}{dx}\left(x^n J_n(x)\right) = x^n J_{n-1}(x)$.
18. Express $x^4 + 2x^3 + 2x^2 - x - 3$ in terms of Legendre polynomial of first kind with degree 4.
19. Form a partial differential equation for $z = a(x + y) + b(x - y) + abt + c$, where a, b, c are arbitrary constants.
20. Solve: $(x + 2z)p + (4zx - y)q = 2x^2 + y$.
21. Prove that $\frac{d}{dx}\left(F(\alpha, \beta, \gamma; x)\right) = \frac{\alpha\beta}{\gamma} F(\alpha + 1, \beta + 1, \gamma + 1; x)$.
22. Show that $F(\alpha, \beta, \gamma; x) = \frac{1}{B(\beta, \gamma - \beta)} \int_0^1 t^{\beta-1}(1 - t)^{\gamma-\beta-1}(1 - xt)^{-\alpha} dt$.
23. Solve: $py = 2xy + logq$.
24. Solve: $pq = p + q$.

Atmiya University Rajkot

Part C

25. Write working rule for frobenious method.
26. Solve in series the differential equation $4xy'' + 2y' + y = 0$.
27. State and prove Rodrigue formula.
28. Write the series solution for Bessel's equation.
29. Solve in series the differential equation $xy'' + y' - y = 0$.
30. Prove that: $P_n(x) = \frac{1}{2^n n!}\frac{d^n}{dx^n}(x^2-1)^n, n \in N$.
31. Derive series solution of Bessel's equation.
32. Solve: $x(y^2 - z^2)p - y(z^2 + x^2)q = z(x^2 + y^2)$.
33. Show that $xp = yq$, $z(xp + yq) = 2xy$ are compatible and find the solution.
34. Derive series solution of Gauss hyper geometric equation.
35. State and Prove Gauss theorem for hyper geometric function.
36. Derive Jacobi's Auxiliary equation.
37. Solve: $p^2 + x^2y^2q^2 = x^2z^2$.

(Dr. Neha D. Bhad)

Atmiya University Rajkot

ATMIYA UNIVERSITY, Rajkot
Faculty of Science
Department of Mathematics

Question Bank
Academic Year: 2022-23

Program: **M.Sc. Mathematics** Semester: **I**

Course Code: **21MMTCC101** Course: **Group Theory**

Part A

1. Give an example of non-commutative group.
2. Consider $(\mathbb{Z}, +)$ the group of integers with usual addition and give two subgroups of $(\mathbb{Z}, +)$, whose union is not a subgroup of $(\mathbb{Z}, +)$.
3. Define: Normal subgroup.
4. Define: Even permutation.
5. Write the Cayley table for Klein-4 group.
6. State fundamental theorem of cyclic groups.
7. Define: Inner automorphism.
8. Give the formula of class equation of a group.
9. State the fundamental theorem of finite abelian groups.

Part B

10. Let G be any group and let $a \in G$ be an element of G, then prove that $O(bab^{-1}) = O(a), \forall\, b \in G$.
11. Let $f, g \in S_n$. Then check whether the permutation $f^{-1}g^{-1}fg$ is an even permutation or an odd permutation.
12. Prove that a subgroup H of G is a normal subgroup of G if and only if $aHa^{-1} \subset H$ for each $a \in G$.
13. Prove that center of a group G is a subgroup of G.
14. For $n > 1$, prove that A_n has order $\frac{n!}{2}$.
15. Let $G = < a >$ be a cyclic group of order n. Then $G =< a^k >$ if and only if $\gcd(n, k) = 1$.
16. Prove that set of all rational numbers of the form 3^n6^m, where n and m are integers, is a group under multiplication.
17. Let G be an Abelian group. Let $a, b \in G$ such that $o(a) = m$ and $o(b) = n$ then show that $o(ab) = mn$ if $(m, n) = 1$.
18. Is it impossible to find a homomorphism of $\mathbb{Z}$ onto S_n $(n > 2)$? Justify your answer.
19. Show that the mapping $\Phi(a + ib) = a - ib$ is an automorphism of the group of complex numbers under addition. Also show that Φ preserves complex multiplication as well- that $\Phi(xy) = \Phi(x)\Phi(y), \forall x, y \in \mathbb{C}$
20. If f is a homomorphism of G onto H and g is a homomorphism of H onto K, then show $g \circ f$ is a homomorphism of G onto K. Also show that the kernel of f is a subgroup of that of $g \circ f$.
21. Let G be a group and $a \in G$ then prove that $|cl(a)| = \left|\frac{G}{C(a)}\right|$, where $C(a)$ is the centralizer of a and $cl(a)$ is the conjugacy class of a.
22. If A, B are finite subgroups of a group G, then prove that $o(AxB) = \frac{o(A)\,o(B)}{o(A \cap xBx^{-1})}$
23. State and prove Sylow's second theorem.

Atmiya University Rajkot

24. Define: Internal direct product and external direct product. Also Give an example of group which is a direct product of its two subgroups.
25. If order of group G is p^2 for some prime p, then show that G is abelian.

Part C

26. State and prove Lagrange's theorem.
27. Is set of all Rational number other than one with operation $a * b = a + b - ab$ forms group? If yes, check whether it is Abelian or not.
28. State and prove Fundamental Theorem of Cyclic Groups
29. Prove that each permutation $f \in S_n$ can be expressed as a composition of disjoint cycles.
30. Let G be a group and $a \in G$ be any element of G such that $o(a) = n$. Then prove the following:

    (1) $o(a^m) \leq o(a); \forall m \in \mathbb{Z}$.
    (2) $o(a^{-1}) = o(a)$.
    (3) If t is a positive integer such that $(t, n) = 1$, then $o(a^t) = o(a)$.
    (4) $o(bab^{-1}) = o(a); \forall b \in G$.

31. (1) Prove that a subgroup H of G is normal subgroup of G if and only if $aHa^{-1} \subset H$ for each $a \in G$.
    (2) Prove that a subgroup H of G is normal subgroup of G if and only if $(Ha)(Hb) = H(ab); \forall a, b \in G$
32. Prove that each permutation $f \in S_n$ can be expressed as a composition of disjoint cycles.
33. State and prove Lagrange's theorem.
34. Prove that the set of all automorphisms of a group and the set of all inner automorphism of a group are both groups under the operation function composition.
35. State and prove Cayley's theorem.
36. State and prove Sylow's first theorem.
37. State and prove first fundamental theorem of homomorphism of groups.
38. Let G be a group and suppose that G is the internal direct product of $N_1, N_2, \ldots, N_k$. Let $T = N_1 \times N_2 \times \ldots, \times N_k$. Then show that G is isomorphic to T.
39. Show that the relation $\sim$ defined as below is an equivalence relation on G and the equivalence class of $x \in G$ is the set $AxB = \{axb : a \in A, b \in B\}$.

    $x \sim y$ if $y = axb$ for some $a \in A, b \in B$.

Atmiya University Rajkot

Atmiya University, Rajkot
Faculty of Science
Department of Mathematics
Class: MSc Mathematics-Sem-1
AY: 2022-23

Question bank
Theory of computation

1. Define hypothesis.
The formal proof can be using deductive proof and inductive proof. The deductive proof consists of sequence of statements given with logical reasoning in order to prove the first or initial statement. The initial statement is called hypothesis.
2. Define inductive proof.
It is a recursive kind of proof which consists of sequence of parameterized statements that use the statement itself with lower values of its parameter.
3. Define Set, Infinite and Finite Set.
Set is Collection of various objects. These objects are called the elements of the set.
Eg : A = { a, e, i, o, u }
Infinite Set is a collection of all elements which are infinite in number.
Eg: A = { a | a is always even number }
Finite Set is a collection of finite number of elements.
Eg : A = { a, e, i, o, u }
4. Give some examples for additional forms of proof.
1. Proofs about sets
2. Proofs by contradiction
3. Proofs by counter examples
5. Define Finite Automation.
A finite automata is a collection of 5 tuples (Q, Σ. δ, q0, F) where Q is a finite set of states, which is non empty.
Σ is a input alphabet, indicates input set. δ is a transition function or a function defined for going to next state.
q0 is an initial state (q0 in Q) F is a set of final states.
Two types :
Deterministic Finite Automation (DFA)
Non-Deterministic Finite Automation. (NFA)

6. Define Deterministic Finite Automation.
– The finite automata is called DFA if there is only one path for a specific input from current state to next state.
– A finite automata is a collection of 5 tuples (Q, Σ. δ, q0, F)
where Q is a finite set of states, which is non empty.
Σ is a input alphabet, indicates input set.
δ is a transition function or a function defined for going to next state.
q0 is an initial state (q0 in Q) F is a set of final states.

7.Begin either with 00 or 11
Regular expression :(0+1)(0+1)*:(0+1)(0+1)*

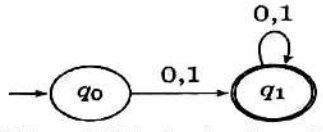

NFA = DFA for begin with
0 or 1 followed by anything

Atmiya University
Rajkot

A. End with 00
Regular expression :(0+1)*0:(0+1)*0

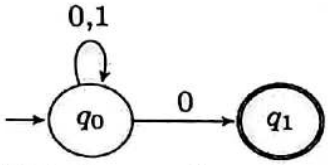

NFA for anything from beginning, end with 0

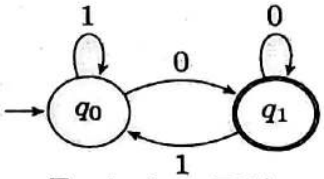

Equivalent DFA

B. End with 0000
Regular expression :(0+1)*00:(0+1)*00

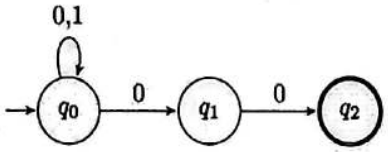

NFA for anything from beginning, end with 00

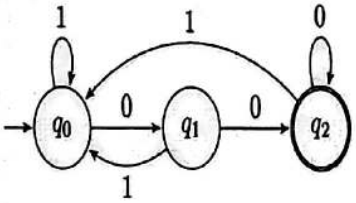

Equivalent DFA

C. Containing the substring 0000
Regular expression :(0+1)*00(0+1)*:(0+1)*00(0+1)*

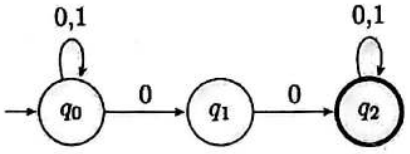

NFA for anything followed by 00 followed by anything

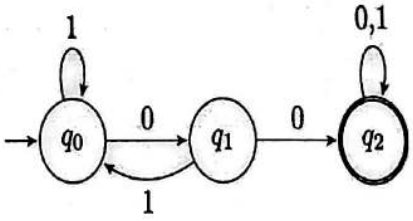

Equivalent DFA

So, C is the correct answer.

Atmiya University Rajkot

1 Draw a deterministic and non-deterministic finite automate which accept 00 and 11 at the end of a string containing 0, 1 in it, e.g., 01010100 but not 000111010.
Explanation – Design a DFA and NFA of a same string if input value reaches the final state then it is acceptable otherwise it is not acceptable.
NFA of the given string is as follows:

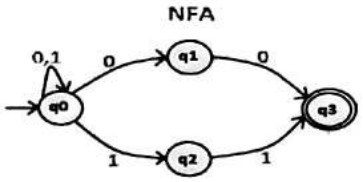

DFA of the given string is as follows:

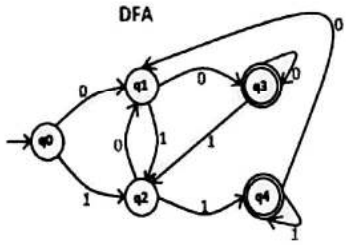

2: Draw a deterministic and non-deterministic finite automata which accept a string containing "the" anywhere in a string of {a-z}, e.g., "there" but not "those".
Explanation – Design a DFA and NFA of a same string if input value reaches the final state then it is acceptable otherwise it is not acceptable. It is applicable for all the DFA and NFA. Since, NFA is quit easier then DFA, so first make its NFA and then go through the DFA.
NFA of the given string is as follows:

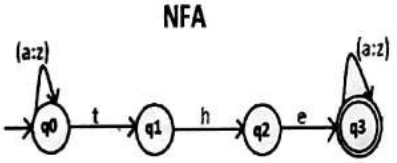

DFA of the given string is as follows:

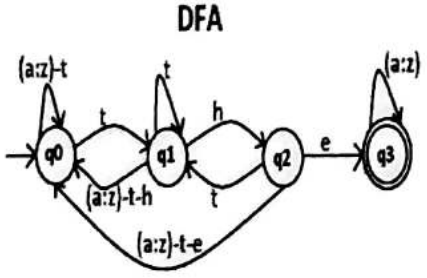

3: Draw a deterministic and non-deterministic finite automata which accept a string containing "ing" at the end of a string in a string of {a-z}, e.g., "anything" but not "anywhere".

Atmiya University
Rajkot

Explanation – Design a DFA and NFA of a same string if input value reaches the final state then it is acceptable otherwise it is not acceptable. It is applicable for all the DFA and NFA. NFA of the given string is as follows:

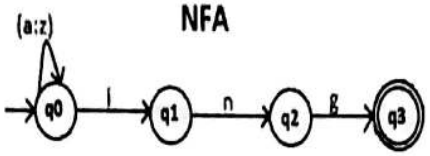

DFA of the given string is as follows:

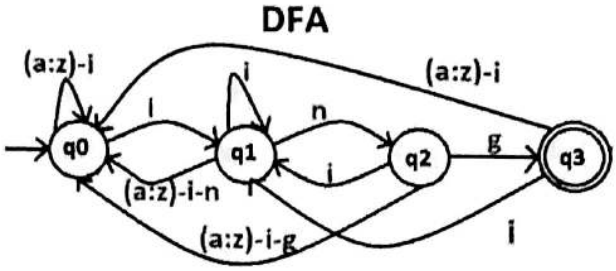

Here, **q0** shows the initial state, **q1** and **q2** are the transition states, and **q3** is the final state.

4 : Which one of the following languages over the alphabet {0,1} is described by the regular expression?
(0+1)*0(0+1)*0(0+1)*
(A) The set of all strings containing the substring 00.
(B) The set of all strings containing at most two 0's.
(C) The set of all strings containing at least two 0's.
(D) The set of all strings that begin and end with either 0 or 1.

Solution : Option A says that it must have substring 00. But 10101 is also a part of language but it does not contain 00 as substring. So it is not correct option.
Option B says that it can have maximum two 0's but 00000 is also a part of language. So it is not correct option.
Option C says that it must contain atleast two 0. In regular expression, two 0 are present. So this is correct option.
Option D says that it contains all strings that begin and end with either 0 or 1. But it can generate strings which start with 0 and end with 1 or vice versa as well. So it is not correct.

5 : Which of the following languages is generated by given grammar?
S ->aS | bS | ∈
(A) $\{a^n b^m \mid n,m \geq 0\}$
(B) $\{w \in \{a,b\}^* \mid w$ has equal number of a's and b's$\}$
(C) $\{a^n \mid n \geq 0\} \cup \{b^n \mid n \geq 0\} \cup \{a^n b^n \mid n \geq 0\}$
(D) $\{a,b\}^*$
Solution : Option (A) says that it will have 0 or more a followed by 0 or more b. But S ->bS =>baS =>ba is also a part of language. So (A) is not correct.
Option (B) says that it will have equal no. of a's and b's. But But S ->bS => b is also a part

Atmiya University Rajkot

of language. So (B) is not correct.
Option (C) says either it will have 0 or more a's or 0 or more b's or a's followed by b's. But as shown in option (A), ba is also part of language. So (C) is not correct.
Option (D) says it can have any number of a's and any numbers of b's in any order. So (D) is correct.

6 : The regular expression 0*(10*)* denotes the same set as
(A) (1*0)*1*
(B) 0 + (0 + 10)*
(C) (0 + 1)* 10(0 + 1)*
(D) none of these

Solution : Two regular expressions are equivalent if languages generated by them are same.
Option (A) can generate all strings generated by 0*(10*)*. So they are equivalent.
Option (B) string null can not generated by given languages but 0*(10*)* can. So they are not equivalent.
Option (C) will have 10 as substring but 0*(10*)* may or may not. So they are not equivalent.

7 : The regular expression for the language having input alphabets a and b, in which two a's do not come together:
(A) (b + ab)* + (b +ab)*a
(B) a(b + ba)* + (b + ba)*
(C) both options (A) and (B)
(D) none of the above
Solution:
Option (C) stating both both options (A) and (B) is the correct regular expression for the stated question.
The language in the question can be expressed as
L={&epsilon,a,b,bb,ab,aba,ba,bab,baba,abab,...}.
In option (A) 'ab' is considered the building block for finding out the required regular expression.(b + ab)* covers all cases of strings generated ending with 'b'.(b + ab)*a covers all cases of strings generated ending with a.

Applying similar logic for option (B) we can see that the regular expression is derived considering 'ba' as the building block and it covers all cases of strings starting with a and starting with b.

8. There are _____ tuples in finite state machine.
a) 4
b) 5
c) 6
d) unlimited
Answer:b
Explanation: States, input symbols, initial state, accepting state and transition function.

Atmiya University Rajkot

9. Transition function maps.
a) Σ * Q -> Σ
b) Q * Q -> Σ
c) Σ * Σ -> Q
d) Q * Σ -> Q

Answer:d
Explanation: Inputs are state and input string output is states.

10. Number of states require to accept string ends with 10.
a) 3
b) 2
c) 1
d) can't be represented.

Answer:a
Explanation: This is minimal finite automata.
11. Extended transition function is .
a) Q * Σ* -> Q
b) Q * Σ -> Q
c) Q* * Σ* -> Σ
d) Q * Σ -> Σ

Answer:a
Explanation: This takes single state and string of input to produce a state.

12. δ*(q,ya) is equivalent to .
a) δ((q,y),a)
b) δ(δ*(q,y),a)
c) δ(q,ya)
d) independent from δ notation
Answer:b
Explanation: First it parse y string after that it parse a.

13. String X is accepted by finite automata if .
a) δ*(q,x) E A
b) δ(q,x) E A
c) δ*(Q0,x) E A
d) δ(Q0,x) E A

Answer:c
Explanation: If automata starts with starting state and after finite moves if reaches to final step then it called accepted.

14. Languages of a automata is
a) If it is accepted by automata
b) If it halts
c) If automata touch final state in its life time

Atmiya University
Rajkot

d) All language are language of automata

Answer:a
Explanation: If a string accepted by automata it is called language of automata.

15. Language of finite automata is.
a) Type 0
b) Type 1
c) Type 2
d) Type 3

Answer:d
Explanation: According to Chomsky classification.

16. Finite automata requires minimum _____ number of stacks.
a) 1
b) 0
c) 2
d) None of the mentioned

Answer:b
Explanation: Finite automata doesn't require any stack operation.

17. Number of final state require to accept Φ in minimal finite automata.
a) 1
b) 2
c) 3
d) None of the mentioned

Answer:d
Explanation: No final state requires.

18. Regular expression for all strings starts with ab and ends with bba is.
a) aba*b*bba
b) ab(ab)*bba
c) ab(a+b)*bba
d) All of the mentioned

Answer:c
Explanation: Starts with ab then any number of a or b and ends with bba.

19. How many DFA's exits with two states over input alphabet {0,1} ?
a) 16
b) 26
c) 32
d) 64

Answer:d
Explanation: Number of DFA's = $2^n * n^{(2*n)}$.

Atmiya University Rajkot

20. The basic limitation of finite automata is that
a) It can't remember arbitrary large amount of information.
b) It sometimes recognize grammar that are not regular.
c) It sometimes fails to recognize regular grammar.
d) All of the mentioned

Answer:a
Explanation:Because there is no memory associated with automata.

21. Number of states require to simulate a computer with memory capable of storing '3' words each of length '8'.
a) $3 * 2^8$
b) $2^{(3*8)}$
c) $2^{(3+8)}$
d) None of the mentioned

Answer:b
Explanation: $2^{(m*n)}$ states requires.
22. FSM with output capability can be used to add two given integer in binary representation. This is
a) True
b) False
c) May be true
d) None of the mentioned

Answer:a
Explanation: Use them as a flip flop output.

23. Assume the R is a relation on a set A, aRb is partially ordered such that a and b are _____
a) reflexive
b) transitive
c) symmetric
d) reflexive and transitive

Answer: d
Explanation: A partially ordered relation refers to one which is Reflexive, Transitive and Antisymmetric.

24. The non- Kleene Star operation accepts the following string of finite length over set A = {0,1} | where string s contains even number of 0 and 1
a) 01,0011,010101
b) 0011,11001100
c) ε,0011,11001100
d) ε,0011,11001100

Answer: b
Explanation: The Kleene star of A, denoted by A*, is the set of all strings obtained by concatenating zero or more strings from A.

Atmiya University Rajkot

25. A regular language over an alphabet $\sum$ is one that cannot be obtained from the basic languages using the operation
a) Union
b) Concatenation
c) Kleene*
d) All of the mentioned

Answer: d
Explanation: Union, Intersection, Concatenation, Kleene*, Reverse are all the closure properties of Regular Language.

26. Statement 1: A Finite automata can be represented graphically; Statement 2: The nodes can be its states; Statement 3: The edges or arcs can be used for transitions
Hint: Nodes and Edges are for trees and forests too.
Which of the following make the correct combination?
a) Statement 1 is false but Statement 2 and 3 are correct
b) Statement 1 and 2 are correct while 3 is wrong
c) None of the mentioned statements are correct
d) All of the mentioned

Answer: d
Explanation: It is possible to represent a finite automaton graphically, with nodes for states, and arcs for transitions.

27. Which of the following is not a part of 5-tuple finite automata?
a) Input alphabet
b) Transition function
c) Initial State
d) Output Alphabet

Answer: d
Explanation: A FA can be represented as FA = (Q, $\sum$, δ, q0, F) where Q=Finite Set of States, $\sum$=Finite Input Alphabet, δ=Transition Function, q0=Initial State, F=Final/Acceptance State).

28. Given: $\sum$= {a, b}
L= {x$\epsilon\sum^*$|x is a string combination}
$\sum$4 represents which among the following?
a) {aa, ab, ba, bb}
b) {aaaa, abab, ε, abaa, aabb}
c) {aaa, aab, aba, bbb}
d) All of the mentioned

Answer: b
Explanation: $\sum^*$ represents any combination of the given set while $\sum$x represents the set of combinations with length x where x ϵ I.

29. Complement of a DFA can be obtained by
a) making starting state as final state
b) no trival method
c) making final states non-final and non-final to final

Atmiya University
Rajkot

d) make final as a starting state

Answer:c
Explanation: String accepted in previous DFA will not be accepted and non accepting string will be accepted .

30. Complement of regular sets are _____
a) Regular
b) CFG
c) CSG
d) RE

Answer:a
Explanation: Regular sets are closed under complement operation.

31. Reverse of a DFA can be formed by
a) using PDA
b) making final state as non-final
c) making final as starting state and starting state as final state
d) None of the mentioned

Answer:c
Explanation: By making final state as starting state string starting from end will be accepted.

32. Reverse of (0+1)* will be
a) Phi
b) Null
c) (0+1)*
d) (0+1)
Answer:c
Explanation: There is only one state which is start and final state of DFA so interchanging starting start and final state doesn't change DFA.

33. Complement of (a + b)* will be
a) phi
b) null
c) a
d) b

Answer:a
Explanation: Given expression accept all string so complement will accept nothing.

34. NFA, in its name has 'non-deterministic' because of :
a) The result is undetermined
b) The choice of path is non-deterministic
c) The state to be transited next is non-deterministic
d) All of the mentioned

Atmiya University
Rajkot

Answer: b
Explanation: Non deterministic or deterministic depends upon the definite path defined for the transition from one state to another or undefined(multiple paths).

35. The number of tuples in an extended Non Deterministic Finite Automaton:
a) 5
b) 6
c) 7
d) 4

Answer: a
Explanation: For NFA or extended transition function on NFA, the tuple elements remains same i.e. 5.

36. Choose the correct option for the given statement:
Statement: The DFA shown represents all strings which has 1 at second last position.

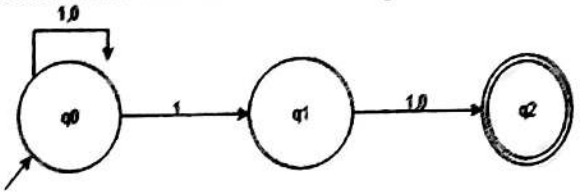

a) Correct
b) Incorrect, Incomplete DFA
c) Wrong proposition
d) May be correct

Answer: c
Explanation: The given figure is an NFA. The statement contradicts itself.

37. From the given table, $\delta^*(q0, 011) = ?$

Q	δ(q,0)	δ(q,1)
q0	{q0}	{q0, q1}
q1	{q2}	{q2}
q2	{q3}	{q3}
q3	ϕ	ϕ

a) {q0}
b) {q1} U {q0, q1, q2}
c) {q2, q1}
d) {q3, q1, q2, q0}

Answer: b
Explanation: $\delta^*(q0,011) = U_{rc}\delta^*(q0,01)\,\delta(r, 1) = \{q0, q1, q2\}$.

38. Let for $\sum = \{0,1\}$ $R = (\sum\sum\sum)^*$, the language of R would be
a) {w | w is a string of odd length}
b) {w | w is a string of length multiple of 3}
c) {w | w is a string of length 3}

Atmiya University Rajkot

d) All of the mentioned

Answer: b
Explanation: This regular expression can be used to eliminate the answers and get the result. The length can be even and as well more than 3 when R= (∑∑∑) (∑∑∑) (particular case).

39. If ∑= {0,1}, then Φ* will result to:
a) ε
b) Φ
c) ∑
d) None of the mentioned

Answer: a
Explanation: The star operation brings together any number of strings from the language to get a string in the result. If the language is empty, the star operation can put together 0 strings, resulting only the empty string.

40. The given NFA represents which of the following NFA
a) (ab U a) *
b) (a*b* U a*)
c) (ab U a*)
d) (ab)* U a*

Answer: a
Explanation: The Regular expression (ab U a) * is converted to NFA in a sequence of stages as it can be clearly seen in the diagram. This NFA consist of 8 stated while its minimized form only contains 2 states.

41. Which of the following represents a language which has no pair of consecutive 1's if ∑= {0,1}?
a) (0+10)*(1+ε)
b) (0+10)*(1+ε)*
c) (0+101)*(0+ε)
d) (1+010)*(1+ε)

Answer: a
Explanation: All the options except 'a' accept those strings which comprises minimum one pair of 1's together.
42. The finite automata accept the following languages:
a) Context Free Languages
b) Context Sensitive Languages
c) Regular Languages
d) All the mentioned

Answer: c
Explanation: A finite automaton accepts the languages which are regular and for which a DFA can be constructed.

43.Which among the following is equivalent to the given regular expression?
01*+1

Atmiya University
Rajkot

a) (01)*+1
b) 0((1)*+1)
c) (0(1)*)+1
d) ((0*1)1*)*

Answer: c
Explanation: Using the rules of precedence on the give expression, c is the appropriate choice with the order of: Bracket>Kleene>Dot>Union

44. Which among the following cannot be accepted by a regular grammar?
a) L is a set of numbers divisible by 2
b) L is a set of binary complement
c) L is a set of string with odd number of 0
d) L is a set of 0^n1^n

Answer: d
Explanation: There exists no finite automata to accept the given language i.e. 0^n1^n. For other options, it is possible to make a dfa or nfa representing the language set.

Atmiya University
Rajkot

ATMIYA UNIVERSITY

Program : **M.Sc. Mathematics**
Semester : **I**
Course: **Topology**
Course Code: 21MMTCC102

QUESTION BANK

1. Let (X, τ) be any discrete topological space then prove that $B = \{\{x\} / x \in X\}$ is a basis for(X, τ).
2. Let τ_β be the collection of topologies on X. Then prove that $\cap \{\tau_\beta\}$ is also a topology on X.
3. Let $X = \{1,3,5,7\}$ and $\tau = \{\phi, X, \{1\}, \{5\}, \{1,5\}\}$ then find τ_Y for following subsets of X.
   (i)$Y = \{3,5\}$ (ii)$Y = \{1,5,7\}$ (iii)$Y = \{7\}$.
4. Let A be a subspace of X and B is a subspace of Y then show that the subspace topology on $A \times B$ of $X \times Y$ is same as the product topology on $A \times B$.
5. For $A, B \subset X$, if $A \subset B$ then prove that $\bar{A} \subset \bar{B}$.
6. Let $A \subset X$ then prove that A is open if and only if $A^\circ = A$.
7. Let (X, τ) and (Y, τ') be any two topological spaces and $c \in Y$ is fixed. A function $f: (X, \tau) \to (Y, \tau')$ be defined as $f(x) = c$. Then check whether f is continuous or not.
8. Let A be a connected subspace pf . If $A \subset B \subset \bar{A}$, then show that B is also connected.
9. Write statements of following:
   (i)Urysohn's Lemma (ii)Tietze extension theorem.
10. Prove that every T_2 space is T_1 space.
11. Let X be a set and $\mathcal{B}$ is the basis for X. Let $\tau = \{G \subset X$ / for $\forall x \in G, \exists B \in \mathcal{B} \ni x \in B \subset G\}$ then show that τ is a topology on X.
12. Let $X = \mathbb{R}$ and $\tau = \{G \subset X$ / for each element $x \in G \exists$ some (a, b) such that $x \in (a, b) \subset G\}$ then check whether τ is topology or not.
13. Let (X, τ) and (Y, τ') be two topological spaces and $\mathcal{B}$ is a basis for X and $\mathbb{C}$ is a basis on Y then prove that the set $\{B \times C / B \in \mathcal{B}, C \in \mathbb{C}\}$ is a basis for the product topology on $X \times Y$.
14. Let (X, τ) be any topological space and (Y, τ_Y) is a subspace topology on Y of X then prove that the subset $G \subset Y$ is closed in Y if and only if $G = H \cap Y$, for some closed set H in X.
15. (i)If $A, B \subset X$ then show that $\overline{(A \cap B)} \neq \bar{A} \cap \bar{B}$.
    (ii)If $A, B \subset X$ then show that $(A \cup B)^\circ \neq A^\circ \cup B^\circ$.
16. Prove that $\mathbb{N}' = \phi$.

Atmiya University Rajkot

17. Prove that every closed subspace of compact space is compact.
18. Let X, Y and Z be any three such that Y is subspace of Z. Then prove that $f: X \to Z$ is continuous if and only if $f: X \to Y$ is continuous.
19. Show that every discrete topological space is normal space.
20. Prove that a space is T_1 space if and only if every singleton subsets of X are closed set in X.

Atmiya University
Rajkot

ATMIYA UNIVERSITY, Rajkot
Faculty of Science
Department of Mathematics

Question Bank
Academic Year: 2022-23

Program: **M.Sc. Mathematics** Semester: **II**

Course Code: **21MMTCC202** Course: **Real Analysis**

---

1. Define the following terns:
   - Lebesgue measurable set
   - Measurable function
   - Characteristic function and simple function
2. Using outer measure, prove that [1,2) is not a countable subset of $\mathbb{R}$.
3. Let $E \subseteq \mathbb{R}$ and $m^*E = 0$. Then prove that E is a Lebesgue measurable set.
4. Let $A, B \subseteq \mathbb{R}$ and $m^*B = 0$. Then prove that $m^*(A \cup B) = m^*A$.
5. Let $E \in \mathfrak{m}$ and $\phi: E \to \mathbb{R}$ be a simple map with $\phi(E) = \{a_1, a_2, \dots, a_n\}$. Write down canonical representation of ϕ.
6. Write down all Littlewood's three principles without proof.
7. Let $E_1, E_2 \in \mathfrak{m}$. Then prove that $E_1 \cup E_2 \in \mathfrak{m}$.
8. Prove that $\mathfrak{m}$ is an algebra on $\mathbb{R}$.
9. Construct the Cantor set and prove that it is an uncountable as well as measurable set.
10. Let $E_1, E_2, \dots, E_n$ be finite sequence of measurable set and $E_i \cap E_j = \phi, \forall i \neq j$ and $i, j = \{1,2,3, \dots, n\}$. Let $A \subseteq \mathbb{R}$ be any subset. Then prove that $m^*(A \cap [\bigcup_{i=1}^{n} E_i]) = \sum_{i=1}^{n} m^*(A \cup E_i)$.
11. Prove that $\mathfrak{M}$ is a σ −algebra on $\mathbb{R}$.
12. Prove that the Borel field, $B_0 \subseteq \mathfrak{m}$, the collection of all measurable sets.
13. Let $< E_n > \subseteq M$ and $E_{n+1} \subseteq E_n, \forall n \in \mathbb{N}$. Let $m(E_1) < \infty$. Then prove that $m(\bigcap_{i=1}^{\infty} E_i) = \lim_{n\to\infty} m(E_n)$.
14. Let $E \in \mathfrak{m}$ and f be an extended real valued function on E. Prove that for any real α, followings are equivalent:

i) $\{x \in E / f(x) \geq \alpha\} \in \mathfrak{m}$
ii) $\{x \in E / f(x) < \alpha\} \in \mathfrak{m}$
iii) $\{x \in E / f(x) \leq \alpha\} \in \mathfrak{m}$
iv) $\{x \in E / f(x) > \alpha\} \in \mathfrak{m}$

15. Let $f, g: E \to \mathbb{R}$ be two extended real valued measurable functions on a measurable set E. Let $c \in \mathbb{R}$. Then prove that $f + g, f + c, cf, g - f$ and fg all are measurable functions on E.
16. Define the following terms:
    - Algebra of sets (Boolean Algebra).
    - F_σ −sets and G_δ −set
    - Nowhere dense set
    - Borel field and Borel Set
    - Lebesgue outer measure of a subset A of $\mathbb{R}$
17. Let $\mathcal{C} \subseteq P(X)$, for some non-empty set X. Define an algebra of sets on X generated by the collection $\mathcal{C}$.
18. Let $X \neq \phi$ and $\mathcal{R}$ be a boolean algebra on X. Let $A, B \in \mathcal{R}$. Then prove that $A \cap B \in \mathcal{R}$.
19. Define: σ −algebra of a non-empty set X.
20. Let $\mathcal{C}$ be the collection of subsets of X. Define a σ −algebra of sets on X generated by the collection $\mathcal{C}$.
21. Let $X \neq \phi$ and $\mathcal{R}$ be σ −algebra of on X. Let $A_1, A_2, \dots, A_n, \dots \in \mathcal{R}$. Then prove that $\bigcup_{i=1}^{\infty} A_i \in \mathcal{R}$.
22. Let $F_1, F_2, \dots$ be F_σ-sets. Then prove that $\bigcup_{i=1}^{\infty} F_i$ is also an F_σ −set.
23. Give an example of a G_δ-set, which is not an F_σ-set. Also give an example of F_σ-set which is not a G_δ-set.

Atmiya University Rajkot

25. Give an example of a subset of $\mathbb{R}$, which is not a Borel set, as well as it is not a G_δ-set and F_σ-set.
26. Prove that $m^*(\{1\}) = 0$.
27. Let $A = \{a_1, a_2, \dots\} \subseteq \mathbb{R}$. Then prove that $m^*A = 0$.
28. Let $A, B \subseteq \mathbb{R}$ and $A \subseteq B$. Then prove that $m^*A \leq m^*B$.
29. Write down $m^*\mathbb{Q}$, $m^*\big([1,3] \cup (4,7)\big)$, $m^*(\mathbb{N} \times \mathbb{N})$ and $m^*\big([1,3] \cup (2,4)\big)$.
30. Let $X \neq \phi$ and $\mathcal{R} \subseteq P(X)$. Suppose $\mathcal{R}$ satisfies the condition that if $A \in \mathcal{R}$. Then prove that the following statements are equivalent:
    i) $\mathcal{R}$ is an algebra of sets on X.
    ii) $A_1, A_2, \dots, A_n \in \mathcal{R}$ then $\bigcup_{i=1}^{n} A_i \in R$
    iii) $A_1, A_2, \dots, A_n \in \mathcal{R}$ then $\bigcap_{i=1}^{n} A_i \in R$
    iv) $A, B \in \mathcal{R}$ then $A \cap B \in \mathcal{R}$
31. Let $X = \mathbb{N}$ and $\mathcal{R} = \{A \subseteq X / \textit{Either } A \textit{ is a finite set or } A^c \textit{ is a finite set}\}$. Then show that $\mathcal{R}$ is an algebra of sets on X.
32. Let $X \neq \phi$ and $\mathcal{C}$ be a collection of subsets of X. Let $\beta = \{\mathcal{R} / \mathcal{R} \textit{ is a boolean algebra on } X \textit{ and } \mathcal{C} \subseteq P(X)\}$ and $\mathcal{H} = \bigcap_{\mathcal{R} \in \beta} \mathcal{R}$. Then prove that $\mathcal{H}$ is the smallest Boolean algebra on X, which contains $\mathcal{C}$.
33. Let X be an infinite set and $\mathcal{C} = \{\{x\} / x \in X\}$. Then verify that $\mathcal{R} = \{A \subseteq X / \textit{Either } A \textit{ is a finite set or } A^c \textit{ is a finite set}\}$ is the algebra of sets on X generated by the collection $\mathcal{C}$.
34. Let $X \neq \phi$ and $\mathcal{R}$ be an algebra of sets on X. Let $< A_i > \subseteq R$ be a sequence. Then prove that $\exists < B_i > \subseteq R$ such that B_i's are mutually disjoint, $B_i \subseteq A_i$, $\forall i = 1,2, \dots$ and for any $n \in \mathbb{N}$, $\bigcup_{i=1}^{n} B_i = \bigcup_{i=1}^{n} A_i$.
35. Let $X = \mathbb{R}$ and $\mathcal{A} = \{A \subseteq X / \textit{Either } A \textit{ is a countable subset or } A^c \textit{ is a countable subset of } X\}$. Then prove that $\mathcal{A}$ is a σ −algebra on X.
36. Let $X \neq \phi$ and $\mathcal{C} \subseteq P(X)$. Let $\mathcal{A}$ be the algebra on X, generated by $\mathcal{C}$. Let $\mathcal{R}_1$ =the σ −algebra on X, generated by $\mathcal{C}$ and $\mathcal{R}_1$ =the σ −algebra on X, generated by $\mathcal{A}$. Then prove that $\mathcal{R}_1 = \mathcal{R}_2$.
37. Prove that Lebesgue outer measure of any interval is its length.
38. Let β_1 be the σ −algebra on $\mathbb{R}$, generated by the collection of all closed sets in $\mathbb{R}$ and β_2 be the σ −algebra on $\mathbb{R}$, generated by the collection of all open sets in $\mathbb{R}$. Then prove that $\beta_1 = \beta_2 = B_0$, the Borel field on $\mathbb{R}$.
39. Let $< A_n > \subseteq P(\mathbb{R})$. Then prove that $m^*(\bigcup_{n=1}^{\infty} A_n) \leq \sum_{n=1}^{\infty} m^*A_n$.

Atmiya University
Rajkot

ATMIYA UNIVERSITY
Faculty of Science
M.Sc. Mathematics

Question Bank

21MMTCC201 – Core 11: Advanced Ring theory and Field extensions *Semester –II*

Part B - Answer the following Questions. **[5 Marks]**

1. Give an example of a ring which has no zero divisor. (justify your answer)
2. Prove that every field is an integral domain.
3. If $\emptyset: R \to R'$ is ring homomorphism then show that $K_\emptyset$ is an ideal of R.
4. Find the g.c.d. of $f(x) = 6x^3 + 5x^2 - 2x + 25$ and $g(x) = 2x^2 - 3x + 5$ of $R[x]$.
5. State and prove Gauss lemma.
6. Let $f(x) = 21x^3 - 3x^2 + 2x + 9$ of $Q[x]$, show that $f(x)$ is irreducible over Q.
7. Show that $[Q(\sqrt{2}); Q] = 2$.
8. Show that every finite extension is an algebraic extension.
9. Compute $G(C, R)$, where C is field of complex numbers and R is field of real numbers
10. For a given p , show that the ring $(Z_p, +_p, \cdot_p)$ has no zero divisor.
11. Prove that restricted cancellation law holds good in a commutative ring if and only if it has no zero divisor.
12. If $\emptyset: R \to R'$ is ring homomorphism then show that $K_\emptyset$ is subring of R.
13. Find the g.c.d. of $f(x) = 6x^3 + 5x^2 - 2x + 25$ and $g(x) = 2x^2 - 3x + 5$ of $R[x]$.
14. State and prove Eisenstein criterion.
15. Let $f(x) = x^3 + 3x^2 + 3x + 3$ of $Q[x]$, show that $f(x)$ is irreducible over Q.
16. Show that $[Q(\sqrt{2}); Q] = 2$.

Atmiya University Rajkot

17. Show that every finite extension is an algebraic extension.

18. Compute $G(K, Q)$, where $K = Q\left(2^{\frac{1}{3}}\right)$ and Q is field of rational numbers.

19. Prove that an automorphism of an extension field of Q fixes rationals.

Part C - Answer the following Questions. **[7 Marks]**

1. Show that $(P(U), \Delta, \cap)$ is ring.

2. If p is prime then prove that $\langle p \rangle$ is always prime ideal and maximal ideal of Z.

3. Show that integral domain $D[x]$ is not a field.

4. Show that any ideal in integral domain $F[x]$ is principle ideal.

5. Explain the converse of mod-p test with example.

6. Prove that every PID is UFD.

7. Let L is a finite extension of K and K is finite extension of F then show that $[L: F] = [L: K][K: F]$.

8. Let L is a finite extension of K and K is finite extension of F then show that $[K: F] | [L: F]$.

9. Let K is finite extension of F then show that $G(K, F) \leq [K: F]$.

10. Show that real quaternion ring having inverse of every nonzero elements.

11. If p is prime then prove that $\langle p \rangle$ is always prime ideal as well as maximal ideal of Z.

12. Let $f, g \in D[x] - \{0\}$ then show that $[fg] = [f] + [g]$.

13. Show that any ideal in integral domain $F[x]$ is principle ideal.

14. Explain the converse of mod-p test with example.

15. Give an example of an integral domain which is not a UFD.

Atmiya University Rajkot

16. Let L is a finite extension of K and K is finite extension of F then show that $[L:F] = [L:K][K:F]$.

17. State and prove Factor and Remainder theorem.

18. Let T is finite extension of K then show that $G(T,K) \leq [T:K]$.

19. Let K be the normal extention of F with characteristic 0. If T is any subfield of K. Prove that if T is normal extension of F if and only if $G(K,T)$ is normal subgroup of $G(K,F)$.

Atmiya University
Rajkot

ATMIYA UNIVERSITY, Rajkot
Faculty of Science
Department of Mathematics

Question Bank
Academic Year: 2022-23

Program: **M.Sc. Mathematics** Semester: **II**

Course Code: **21MMTID202** Course: **Statistical Methods**

Part A

1. Define sample and population.
2. How data are classified in statistics?
3. Difference between histogram and bar graph.
4. Give example of ungrouped and grouped data.
5. What is central tendency?
6. Find harmonic mean of 5,10,15,25.
7. Define the term statistics.
8. Write two properties of probability distribution function.
9. Find range of the following data:

x	5	6	9	14	17	21
f	23	33	25	12	13	28

10. Give a real-life example of linear regression.
11. Define hypothesis.
12. Define the term statistics.

Part B

13. Draw frequency polygon for the following data:

Class Interval	10-20	20-30	30-40	40-50	50-60	60-70	70-80	80-90
Frequency	4	6	8	10	12	14	7	5

14. Explain qualitative data and its types.
15. Find harmonic mean of the following data:

x	20	21	22	23	24	25
f	4	2	7	1	3	1

Atmiya University Rajkot

16. Find the median of the following frequency distribution:

x	10	11	12	13	14	15	16
f	8	15	25	20	12	10	5

17. Find variance, standard deviation and coefficient of variance for the following numbers: 1, 3, 5, 5, 6, 7, 9, 10.

18. Calculate Karl Pearson's coefficient of skewness for the following distribution:

x	0	1	2	3	4	5	6	7
y	12	17	29	19	8	4	1	0

19. Write at least three properties of correlation coefficient.

20. Find regression and correlation coefficients for the given data:

	X	Y
Mean	508.4	23.7
Standard Deviation	36.8	4.6

21. A bag contains 2 black, 3 red and 5 blue balls. Three balls are drawn at random. Find the probability that the three balls drawn are
    i. blue
    ii. consists of 2 red and 1 black ball, and
    iii. consists of exactly 1 black ball.

22. A tyre manufacturer claims that the average life of a particular category of his tyre is 18000 km when used under normal driving conditions. A random sample of 16 tyres was tested. The mean and standard deviation of life of the tyres in the sample were 20000 km and 6000 km, respectively. Assuming that the life of the tyres is normally distributed, test the claim of the manufacturer at 1% level of significance using appropriate test. (Take $\pm t_{(15),0.005} = \pm 2.947$).

23. What are the limitations of statistics?

24. What are the applications of statistics?

25. Construct a pie chart to visually display the favorite fruits of the students in a class based on the given data: Mango - 45; Orange - 30; Plum - 15; Pineapple - 30; Melon – 30.

26. Draw histogram of the following distribution of total marks of 30 students of a class:

Marks(mid-point)	100	120	140	160	180	200
No. of students	5	6	4	7	5	3

27. The following table gives the distribution of the companies according to size of capital. Find the mean size of the capital of the company

Capital (in Lakhs)	No. of companies
Less than 5	20
Less than 10	27
Less than 15	29
Less than 20	38

Atmiya University Rajkot

Less than 25	48
Less than 30	53

28. Following is the distribution of marks obtained by 60 students in a mathematics test. Find median marks

Marks	No of students
More than 0	60
More than 10	56
More than 20	40
More than 30	20
More than 40	10
More than 50	3

29. The arithmetic mean and geometric mean of two positive integers are 10 and 8. Determine the two numbers.

30. If the arithmetic mean and the harmonic mean of the set of observations are 9 and 49, respectively, then find the two numbers.

Part C

31. The bar graph given below shows the marks of students of a class in a particular subject: Study the bar graph and answer the following questions:
(a) If 40 is the pass mark, then how many students have failed?
(b) How many students got marks from 50 to 69?
(c) How many students scored 90 marks and above?
(d) If students who scored marks above 80 are given merits then how many merit holders are there?
(e) What is the strength of the class?

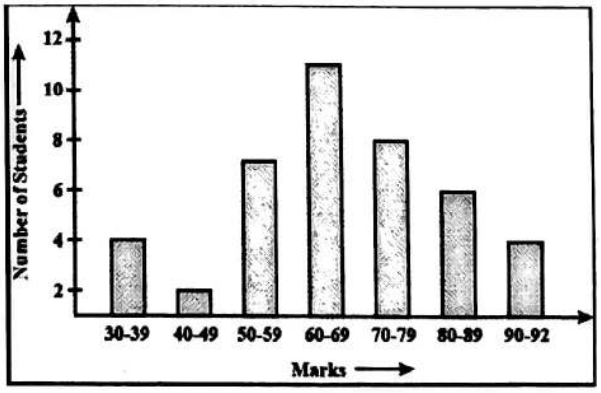

32. The following line graph shows the yearly sales figures for a manufacturing company.
(a) What were the sales in 2002?
(b) What were the sales in 2006?
(c) What were the sales in 2003?

Atmiya University
Rajkot

(d) What were the sales in 2005?
(e) Compute the difference between the sales in 2002 and 2006.
(f) In which year was there the greatest difference between the sales as compared to its previous year?

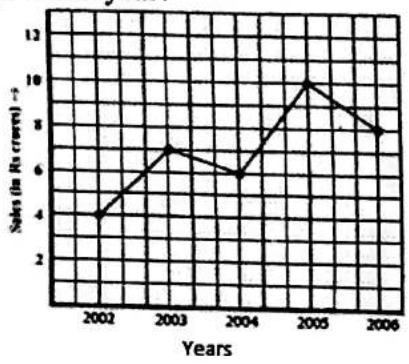

33. Calculate the value of mode for the following frequency distribution:

Class	0-5	5-10	10-15	15-20	20-25	25-30	30-35	35-40
Frequency	5	7	15	18	16	9	6	3

34. Calculate the geometric mean for the following frequency distribution:

Class	100-110	110-120	120-130	130-140	140-150	150-160	160-170
Frequency	4	6	20	32	33	8	2

35. The bar graph given below shows the percentage distribution of the total expenditures of a company under various expenses heads during 2003. Study the graph and answer the questions.

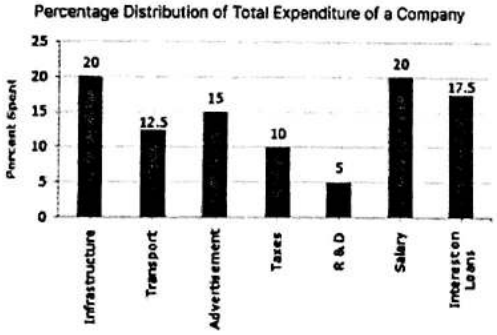

i. If the expenditure on advertisement is Rs 2.10 crores then what is the difference between the expenditure on transport and taxes?
ii. What is the ratio of the total expenditure on infrastructure and transport to the total expenditure on taxes and interest on loans?
iii. If the interest on loans amounted to Rs 2.45 crores then what is the total amount of expenditure on advertisement, taxes and research and development?

36. Study the following line graph carefully and answer the questions given below.

Atmiya University
Rajkot

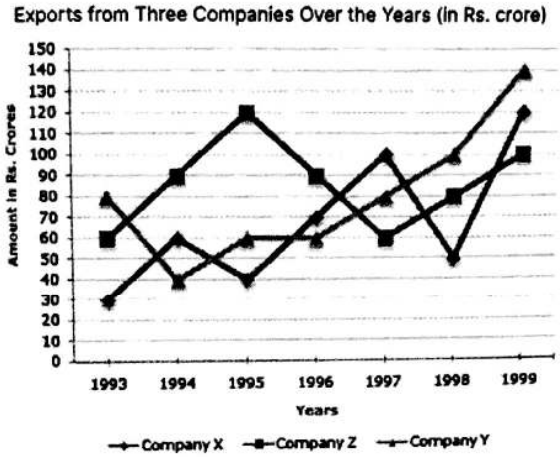

(i) For which pairs of years the total exports from the three companies together are equal?

(ii) In which year was the difference between the exports from companies X and Y the minimum?

(iii) What was the difference between the average exports of the three companies in 1993 and the average exports in 1998?

37. Find geometric mean of the following data: 10, 110, 120, 50, 52, 80.

38. Find arithmetic mean of the given frequency distribution:

x	5	10	15	20	25	30	35	40	45
f	20	43	75	67	72	45	39	9	8

39. The runs scored by two batsmen A and B in 9 consecutive matches are given as:

A	85	20	62	28	9	74	4	69	13
B	26	4	27	15	30	59	15	49	26

Find which batsman is more consistent?

40. Find relative and absolute Kurtosis of the following distribution:

Class Interval	0-10	10-20	20-30	30-40	40-50
Frequency	1	4	3	2	3

41. 8 competitors in a musical test were ranked by three judges A, B and C in the following orders

A	1	6	5	3	2	4	7	8
B	3	5	8	4	7	2	1	6
C	6	4	8	1	2	5	3	7

Using the rank correlation method, find which pair of judges has the nearest approach to common liking in music.

42. From the following data, obtain the two regression lines and correlation coefficient:

Sales (x)	100	98	78	85	110	93	80
Purchase (y)	85	90	70	72	95	81	74

43. If X is a Poisson variate such that

Atmiya University
Rajkot

$$3P(X = 4) = \frac{1}{2} P(X = 2) + P(X = 0)$$

Find:

(i) mean of X,

(ii) $P(X \leq 2)$.

44. Consider the example of the population in a village:

Village	A	B
Sample size	10	12
Mean monthly income	150	140
Sample variance	92	110

Testing the equality of sample variances with a significance level of 5%. (Value of F-statistic at 5% for degree of freedom (9, 11) is 2.90).

Monika

Atmiya University
Rajkot

Institute/Faculty	Atmiya University
Program	M.Sc. (Mathematics)
Semester	III
Course Title	Discrete Mathematics

Sr. No		Question with options	Answer
1	Q.	Which of the following is not a semigroup?	C
	A)	$(N,\times)$	
	B)	$(Z,+)$	
	C)	$(N,-)$,	
	D)	$(Z,\times)$	
2	Q.	What is an identity element of free semigroup?	B
	A)	1	
	B)	$\wedge$	
	C)	0	
	D)	e	
3	Q.	Find the identity element of binary operation defined by for any $a, b \in \mathbb{Z}$, $a * b = a + b + 5$.	A
	A)	-5	
	B)	5	
	C)	0	
	D)	2	
4	Q.	Define a binary operation $*$ on N by $a * b = \max\{a, b\}$. Then find identity element of $*$	A
	A)	1	
	B)	0	
	C)	e	
	D)	n	
5	Q.	Which of the following binary operation is not commutative?	B
	A)	Addition	
	B)	Matrix Multiplication	

Atmiya University Rajkot

	C)	Usual Multiplication	
	D)	Matrix Addition	
6	Q.	Find the zero element for $(S_{30},*)$ where for any $a,b \in S_{30}$, $a * b = lcm(a,b)$.	
	A)	1	C
	B)	15	
	C)	30	
	D)	2	
7	Q.	A congruence relation R is always	
	A)	Reflexive	C
	B)	Symmetric	
	C)	Equivalence	
	D)	Anti-Symmetric	
8	Q.	Which of the following is not a monoid?	
	A)	$(N,\times)$	C
	B)	$(Z,+)$	
	C)	$(N,+)$,	
	D)	$(Z,\times)$	
9	Q.	Which of the following lattice is complemented? (D_n = Set of positive divisors of n)	
	A)	$(D_{30},\leq_{div})$	A
	B)	$(D_{45},\leq_{div})$	
	C)	$(D_{12},\leq_{div})$	
	D)	$(D_{60},\leq_{div})$	
10	Q.	Which of the following is not a Boolean algebra?	
	A)	$(P(A),\subseteq)$	C
	B)	$(D_{30},\leq_{div})$	
	C)	$(\mathbb{N},\leq)$	
	D)	$(D_{71},\leq_{div})$	
11	Q.	The lattice D_{210} is isomorphic to _____	
	A)	D_{16}	C
	B)	Any Lattice with 16 elements.	

Atmiya University Rajkot

	C)	$P(A)$ with $\|A\| = 4$	
	D)	None of above	
12	Q.	Find the minimal elements in the poset$(P, \leq_{div})$ with $P = \{2,3,6,9,10,18\}$.	
	A)	3,9	D
	B)	2,10	
	C)	3,10	
	D)	2,3	
13	Q.	A lattice $(L,*,\oplus)$ is always a _____	
	A)	Field	D
	B)	Ring	
	C)	Commutative Ring	
	D)	None	
14	Q.	Find lub and glb in the lattice (L, D) with $L = \{2,4,6,8,24\}$.	
	A)	2,24	A
	B)	4,24	
	C)	2,8,	
	D)	6,24	
15	Q.	If $A \neq \phi$ hen which of the following is true for lattice $(P(A), \subset)$?	
	A)	Bounded	D
	B)	Complemented	
	C)	Distributive	
	D)	Bounded, Complemented and Distributive	
16	Q.	A pentagon lattice is	
	A)	Modular but not distributive	D
	B)	Distributive but not modular	
	C)	Modular and Distributive	
	D)	Neither Modular nor Distributive	
17	Q.	Which of the following is one of the productions (grammar rule) for the language $L = \{x \mid n_0(x) = n_1(x)\} \subseteq \{0,1\}^*$?	
	A)	$s \rightarrow 0s0$	C
	B)	$s \rightarrow 1s1$	

Amiya University Rajkot

	C)	$s \rightarrow 0s1$	
	D)	$s \rightarrow 0ss$	
18	Q.	If L_1 and L_2 are regular expression with regular expression r_1 and r_2 then the regular expression of $L_1 \cup L_2$ is?	
	A)	$r_1 r_2$	B
	B)	$r_1 + r_2$	
	C)	$r_1 - r_2$	
	D)	$(r_1 + r_2)^*$	
19	Q.	Which of the following is a regular expression of the language that contains all the string of length six or less?	
	A)	$(0+1)^6$	B
	B)	$(0+1+\wedge)^6$	
	C)	$(01)^6$	
	D)	$(10)^6$	
20	Q.	Identify which string is accepted by the FA with regular expression $(11+10)^*$	
	A)	11111011	A
	B)	111001	
	C)	110101	
	D)	1010011	
21	Q.	Which of the following language is regular?	
	A)	Language of palindromes	C
	B)	$L = \{x \in \Sigma^* \mid x ends in\ 00\}$	
	C)	$L = \{0^i 1^i \mid i \geq 0\}$	
	D)	$L = \{0^i x \mid x \in \{0,1\}^*, \lvert x \rvert \leq i\}$	
22	Q.	Which of the following is true while converting an NFA $M = (Q, \Sigma, q_0, A, \delta)$ to an FA $M_1 = (Q_1, \Sigma, q_1, A_1, \delta_1)$?	
	A)	$A = A_1$	B
	B)	$\delta_1(q,a) = \cup_{r \in q} \delta(r,a)$ for any $q \in Q_1$ and $a \in \Sigma$	
	C)	$Q_1 = Q$	
	D)	$\delta_1^*(q,a) = \cup_{r \in q} \delta(r,a)$ for any $q \in Q_1$ and $a \in \Sigma$	
23	Q.	Which of the following string does not belong to the language $L = \{aa, ab\}^*$?	
	A)	$\wedge$	

Atmiya University Rajkot

	B)	aaab	
	C)	abaa	
	D)	aaba	
24	Q.	Let L_1 and L_2 are context free languages then which of the following is not context free language?	
	A)	$L_1 \cup L_2$	C
	B)	$L_1 L_2$	
	C)	$L_1 + L_2$	
	D)	L_1^*	
25	Q.	Which of the following is true if it is given that the truth values of p is T and q is F.	
	A)	$p \rightarrow q$	C
	B)	$p \wedge q$	
	C)	$p \vee q$	
	D)	$p \leftrightarrow q$	
26	Q.	Which of the following is a tautology?	
	A)	$(p \rightarrow q) \wedge q$	B
	B)	$(p \rightarrow q) \leftrightarrow (\sim q \rightarrow \sim p)$	
	C)	$\sim (q \rightarrow p)$	
	D)	$\sim q \wedge \sim p$	
27	Q.	Which of the following is a valid argument form modus tollens?	
	A)	$p \rightarrow q$ $\sim q$ $\therefore \sim p$	A
	B)	$p \rightarrow q$ p $\therefore q$	
	C)	p q $\therefore p \vee q$	
	D)	p q $\therefore p \wedge q$	
28	Q.	An argument with statement formulas $A_1, A_2, \cdots, A_n$ is valid iff	
	A)	$(A_1 \vee A_2 \vee \cdots \vee A_{n-1}) \rightarrow A_n$ is a tautology	B
	B)	$(A_1 \wedge A_2 \wedge \cdots \wedge A_{n-1}) \rightarrow A_n$ is a tautology	

Atmiya University Rajkot

	C)	$(A_1 \wedge A_2 \wedge \cdots \wedge A_n) \rightarrow A_n$ is a tautology	
	D)	$(A_1 \vee A_2 \vee \cdots \vee A_n) \rightarrow A_n$ is a tautology	
29	Q.	Which of the following notation is used to denote existential quantifier?	A
	A)	$\exists$	
	B)	$\forall$	
	C)	$\in$	
	D)	∂	
30	Q.	Let $D = \{2,4,6,8\}$ for which of the following predicate $p(x)$ the universal quantifier "for all $x, p(x)$ is false?	D
	A)	$p(x)$: x is even	
	B)	$p(x)$: x is less than or equal to 8	
	C)	$p(x)$: x is divisible by 2	
	D)	$p(x)$: x is a divisor of 8	
31	Q.	Which of the following is not a statement?	B
	A)	Ganga is a river of India	
	B)	How are You?	
	C)	$\sqrt{2}$ is an irrational no	
	D)	2 is an odd number.	
32	Q.	Which of the following is not a valid argument form?	C
	A)	$p \rightarrow q$ $\sim q$ $\therefore \sim p$	
	B)	$p \rightarrow q$ p $\therefore q$	
	C)	p q $\therefore p \vee q$	
	D)	p q $\therefore p \wedge q$	
33	Q.	Which of the following is not an parity check equation in Hamming code with $n = 7$ and $k = 3$.	D
	A)	$x_1 + x_2 + x_3 + x_5 = 0 \; mod \; 2$	
	B)	$x_1 + x_2 + x_4 + x_6 = 0 \; mod \; 2$	
	C)	$x_1 + x_3 + x_4 + x_7 = 0 \; mod \; 2$	

Atmiya University Rajkot

	D)	$x_1 + x_2 + x_4 + x_7 = 0 \ mod \ 2$	
34	Q.	Which of the following is not a property of Hamming distance?	D
	A)	$H(x,y) = H(y,x)$	
	B)	$H(x,x) = 0$	
	C)	$H(x,z) \geq H(x,y) + H(x,z$	
	D)	$H(x,y) \leq 0$	
35	Q.	Identify which codeword was transmitted if the received codeword is 0000110 in Hamming code with three parity bits.	B
	A)	0010110	
	B)	0100110	
	C)	0000100	
	D)	0010110	
36	Q.	Find the distance between following codewords. X=010101 and Y=111101	B
	A)	1	
	B)	2	
	C)	3	
	D)	4	
37	Q.	Find the distance of code $C = \{111111, 110110, 000111\}$	C
	A)	1	
	B)	3	
	C)	2	
	D)	4	
38	Q.	In an n bit codeword, if the parity check matrix is $H = (B \mid I_r)$ then the generator matrix G is	A
	A)	$(I_{n-r} \mid B^T)$	
	B)	$(I_r \mid B^T)$	
	C)	$(I_n \mid B^T)$	
	D)	$(I_{n-r} \mid B)$	
39	Q.	The number of unmatched bits between codewords x and y is known as_____	B
	A)	Hamming bits	
	B)	Hamming Distance	
	C)	Hamming Length	

Atmiya University Rajkot

	D)	Hamming Path	
40	Q.	Which of the following is not a part of communication system?	D
	A)	Sender	
	B)	Receiver	
	C)	Channel	
	D)	Noise	

Atmiya University Rajkot

Enrollment No._____

ATMIYA UNIVERSITY, RAJKOT

Faculty of Science
Department of Mathematics
Question Bank
Academic Year: 2022-23

Program : **M.Sc. Mathematics** Semester : **III**

Course code: **21MMTDC301** Course : **Financial Mathematics**

Part A

1. State any two financial markets and their dealings.
2. Define: Exercise price and asset price.
3. What is up-front premium?
4. Define: Portfolio.
5. Define: Asian option
6. Define: Sensitivity to Volatility.
7. What is bond market?
8. What are dividends?

Part B

9. Explain the terms bid- ask and bid-offer.
10. Explain in detail forward and future contracts.
11. Why would anyone write an option?
12. Explain: Higher the asset prices on expiry of call option, greater the profit.
13. Explain: Higher the exercise price more is received at the expiry of put option.
14. State minimum three differences between options and contracts.
15. State minimum three differences between European option and American option.
16. State minimum three differences between call option and put option.
17. Explain: How the call option value is a function of exercise price and time to expiry.
18. How much one should pay now to receive a guaranteed amount at the future time T.
19. Obtain the stochastic differential equation for $f(S) = \log S$ and $f(S) = S^{100}$.
20. Rahul holds an option on 23rd May 2018 to purchase three hundred shares of Akar industries for Rs 4500 per share after one year. If the cost of option is Rs 100 per share and price of share is Rs 5000 per share on 23rd May 2019 then find the total profit to Rahul on exercising the option. Also find the profit in percentage corresponding to up-front premium paid.
21. Avinash holds an option to purchase 300 shares of Navkar Industries at Rs.600 per share and cost of option is Rs.20 per share. If the market price is Rs.300 per share at the time of expiry then will Avinash exercise the option? Why? Justify your answer
22. Giving the examples explain the term 'Risk' and their type.
23. Explain the simple model of asset prices.

Part C

24. How much one should pay now to receive a guaranteed amount at the future time T?
25. Explain: How the call option value is a function of exercise price and time to expiry.
26. Nayan holds an option on 23rd March 2017 to purchase three hundred shares of Sakar

Atmiya University Rajkot

industries for Rs 4500 per share after one year. If the cost of option is Rs 300 per share and price of share is Rs 10,000 per share on 23rd March 2018 then find the total profit to Nayan on exercising the option. Also find the profit in percentage corresponding to up-front premium paid.

27. Savan holds an option to purchase 100 shares of Akshar Industries at Rs.500 per share and cost of option is Rs.20 per share. If the market price is Rs.400 per share at the time of expiry, then will Savan exercise the option? Why? Justify your answer.
28. Derive stochastic differential equation and also give the economically reasonable justification of the derived equation.
29. State the assumptions of the Black-Scholes analysis and derive the Black-Scholes partial differential equation.
30. State and prove Itô's lemma and extend the result for $f \equiv f(S, t)$.
31. Explain in detail the elimination of randomness.
32. What is an American option? Why it is worth to hold an American option in comparison to a European option?
33. What is put-call parity?
34. Discuss the mathematical significance of Black-Scholes equation and derive the boundary and final conditions for the same.
35. Solve the Black-Scholes differential equation.
36. Define the term dividend yield and explain in detail the constant dividend yield structure and derive the Black-Scholes partial differential equation corresponding to it.
37. Explain discrete dividend structure and derive the jump condition for the same.

Sk. Vaidya

Atmiya University Rajkot

ATMIYA UNIVERSITY
Faculty of Science
M.Sc. Mathematics

Question Bank

[redacted]: Advanced Topics in Linear Algebra *Semester –III*

Part A - Answer the following Questions. **[1 Marks]**

1. Let V and W be any two n-dimensional vector spaces over F, then $\dim(Hom(V,W)) =$ __.
   A) $\dim V$ B) $\dim W$ C) n D) None
2. Let V be any n-dimensional vector space over F, then $\dim(Hom(V,V)) =$ ____.
   A) $\dim V$ B) $\dim W$ C) n^2 D) None
3. Let V be any n-dimensional vector space over F, then $\dim(Hom(V,F)) =$ ____.
   A) $\dim V$ B) $\dim W$ C) n D) Depends on dimension of F
4. An element $T \in A(V)$ is said to be right invertible if there exists an $S \in A(V)$ such that
   A) $TS = 1$ B) $ST = 1$ C) Insufficient Information D) None
5. Let V be a vector space over F and T ∈ A(V). A subspace W of V is called invariant under T if
   A) $T(W) \subset W$ B) $T(W) = W$ C) Both A and B D) None
6. Let V be a vector space over F and T ∈ A(V). A subspace W of V is invariant under any T if $W =$ __?
   A) $\{0\}$ B) V C) Both A and B D) None
7. If W is invariant under S and T then W is invariant under
   A) $S+T$ B) αS C) Both A and B D) None
8. A matrix $(a_{ij}) \in Mn(F)$ is said to be upper triangular if $a_{ij} = 0$.
   A) $\forall i < j$ B) $\forall i > j$ C) $\forall i = j$ D) None
9. Eigen values of lower triangular matrix is
   A) 0 B) All its diagonal entry C) 1 D) All its lower diagonal entry
10. Eigen values of Nilpotent matrix is
    A) Only 1 B) 0 C) Unimodular D) ± 1
11. Two linear transformation in $A_F(V)$ having all their characteristic roots are in F are similar if and only if
    A) They have same Jordan block B) They have same Eigenvalues C) Both A and B D) None
12. Two nilpotent linear transformations are similar if and only if they have the ____ invariants.
    A) Only two B) 0 C) Only one D) Same

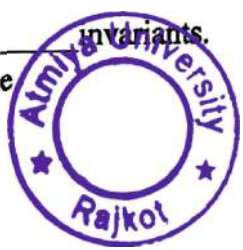

13. All the Eigenvalues of Unitary matrix is

A) Some times -1 B) Some times 1 C) Both A and B D) Unimodular

14. The Eigenvalues of skew Hermitian matrix is

A) Complex B) Purely imaginary C) Positive real D) None

15. Which of the following is true?

A) Trace is always sum of the eigen values of a matrix counted according to their multiplicity B) Invertible matrix always having zero trace C) If trace is 0 then matrix must be non invertible D) Both B and C

16. Determinate of any matrix is always

A) Product of entries on the main diagonal B) Products of its eigen value C) Both A and B D) None

17. If T is a Harmitian then iT is

A) Harmitian B) Skew Harmitian C) In sufficient information D) None

18. If $T \in A(V)$ is unitary if and only

A) $T^*T = I$ B) $TT^* = I$ C) In sufficient information D) None

19. A unitary transformation is

A) Non-singular B) Singular C) Depends on Transformation D) None

20. Inverse of unitary matrix is always

A) Skew Symmetric B) Skew Harmitian C) Harmitian D) Both A and B

21. Define linear transformation.
22. Give any two examples which are always invariant under any $T \in A(V)$.
23. Define minimal polynomial.
24. Define the determinate of a matrix.
25. Define inner product space.
26. What is the difference between regular elements and singular elements of $A(V)$ in terms of their range, in finite-dimensional cases?
27. If $\lambda \in F$ is a characteristic root of T then λ is a root of minimal polynomial for T. (True/False)
28. Let V be a finite-dimensional vector space over F and T □ A(V) be nilpotent with an index of nilpotence is n_1. Then there is a basis of V in which the matrix of T is of the form _____.
29. List all the fundamental properties of trace.
30. All the eigenvalues for a unitary matrix are _____.

Atmiya University Rajkot

Part B - Answer the following Questions. **[5 Marks]**

1. Write short note on algebra
2. Define rank and Let S, T ∈ A(V). Then show that r(TS) ≤ r(T) and r(ST) ≤ r(T)
3. Let T ∈ A(V) and all characteristic roots of T are in F, then show that T satisfies a non trivial polynomial of degree n over F.
4. Show that If T ∈ A(V) has all its characteristic roots are in F, then there is a basis of V in which the matrix of T is triangular.
5. Let M be a subspace of a vector space V and $T \in A(V)$ be nilpotent. If $dim(M) = m$ and M is cyclic with respect to T, then show that $dim(T^k M) = m - k$ for all $k \leq m$.
6. Find the invariants of the linear transformation $T : F3 \to F3$ defined by $T(x, y, z) = (y, z, 0)$, where $x, y, z \in F$.
7. Write all possible J.C.F. of an operator T whose characteristic polynomial is $C(x) = (x-2)^6(x-3)^4$.
8. Write all possible J.C.F. of an operator T whose characteristic polynomial is $C(x) = (x-7)^6$.
9. Show that the linear transformation T on V is unitary if and only if it takes an orthonormal basis of V into an orthonormal basis of V.
10. State and prove any three properties of adjoint of a linear transformation.
11. Write short note on linear transformation.
12. Explain method of obtaining linear transformation from matrix with one example.
13. Let V be a finite dimensional vector space over F and let T ∈ A(V). Let W be a subspace of V which is invariant under T. Then T induces a map $\overline{T}: V/W \to V/W$ defined by $\overline{T}(v + W) = Tv + W, \forall w \in W$, then show that $\overline{T}$ is well defined and $\overline{T} \in A(V/W)$.
14. Let V be an n-dimensional vector space over F. If T ∈ A(V) has all its characteristic roots (or roots of the minimal polynomial) of T are in F, then show that T satisfies a polynomial of degree n over F.
15. Let M be a subspace of a vector space V and T ∈ A(V) be nilpotent. If dim(M) = m and M is cyclic with respect to T, then show that $\dim(T^k M) = m - k$ for all $k \leq m$.
16. If two rows of $A = (a_{ij}) \in M_n(F)$ are equal (i.e., $v_r = v_s$ for $r = s$), then show that $\det(A) = 0$.
17. Let $C(X) = (x-2)^2(x-3)^3$ and $M(X) = (x-2)^2(x-3)^2$ for some operator T, find all possible Jordan Canonical form of T.

Atmiya University Rajkot

18. Write all possible J.C.F. of an operator T whose characteristic polynomial is $C(x) = (x-3)^4$.

19. State and prove any two properties of Nilpotent transformation.

20. State and Prove any two properties of unitary transformation.

Part C - Answer the following Questions. **[7 Marks]**

1. Let $P(x) \in F(x)$. Then prove that $P(A) = 0 \Leftrightarrow P(A') = 0$.

2. Prove that α is a characteristic root of $A \Leftrightarrow \alpha$ is a characteristic root of A'.

3. Prove that Interchanging two rows of a matrix changes the sign of its determinate

4. Explain the definition of determinate for $n = 4$.

5. What is a field of characteristic n? Explain it with an example.

6. Let V be a finite dimensional vector space over $F$and $T \in A(V)$. If $\gamma \in F$ is a root of the minimal polynomial for T. Then γ is a characteristic root of T.

7. Let V be a finite dimensional vector space over $F$and $T \in A(V)$. If all the characteristic roots of T are in F, then T satisfies a polynomial of degree n over F.

8. If $T \in A(V)$ is nilpotent and $\alpha \in F$such that $\alpha \neq 0$ then prove that $\alpha I + T$ is regular and its inverse is a polynomial in T.

9. State and prove any three properties of triangular linear transformation.

10. Give an example of nilpotent matrix of order 3 and find the corresponding linear transformation of the same.

11. If $S, T \in A(V)$ are similar then show that they have the same rank i.e., $r(S) = r(T)$. What about the converse?

12. Prove that $S \in A(V)$ is regular if and only if whenever$v_1, v_2, \ldots, v_n$ in V are linearly independent, and then $Sv_1, Sv_2, \ldots, Sv_n$ are also linearly independent.

13. Let V be any finite dimensional vector space over F and $T \in A(V)$, then $p(x) \in F[x]$ is minimal polynomial for T if and only if for any other polynomial $h(x)$, satisfied by T, we have $p(x)|h(x)$.

14. Define unitary transformation and show that its characteristic roots are unit modulus.

15. For $A, B \in M_n(F)$, show that $\det(AB) = \det(A)\det(B)$.

16. Show that the determinate of a triangular matrix is the product of its entries on the main diagonal.

17. The given matrix is in Jordan form. State its characteristic polynomial and its minimal polynomial. (with reason)

Atmiya University Rajkot

$$\begin{pmatrix} 5 & 0 & 0 & 0 \\ 0 & 2 & 1 & 0 \\ 0 & 0 & 2 & 0 \\ 0 & 0 & 0 & 3 \end{pmatrix}$$

18. Let V be a finite-dimensional vector space over $F$and $T \in A(V)$ be nilpotent. Then show that the invariant of T is unique.

19. State and prove any two properties of the transpose of a matrix.

20. Find the symmetric matrix associated with quadratic forms:
    1. $xy + yz + xz$
    2. $-y^2 - 2z^2 + 4xy + 8xz - 14yz$.

Dr. Parag Ajani

Atmiya University
Rajkot

ATMIYA University, Rajkot
Faculty of Science
Department of Mathematics
AY: 2022-23

ACADEMIC ACTIVITIES

Question Bank: MSc Mathematics Sem– 3

Subject: Self – Study Course: Optimization Techniques (21MMTCC304)

1 In the theory of game, a player may be _____.

(A) individual (B) individuals (C) organizations (D) all of these

2 The theory of game came into existence in _____ century.

(A) 18th (B) 19th (C) 20th (D) none of these

3 If the sum of gains and losses not equal to zero then such game is called _____ game.

(A) zero sum (B) non-zero sum (C) fare (D) none of these

4 A game has always unique saddle points.

(A) True (B) False

5 In the theory of game, strategies can be further classified into _____.

(A) optimal (B) pure (C) A & B both (D) None of these

6 The outcome resulting from a particular strategy is also known to the players in advance and is expressed in terms of numerical values.

(A) True (B) False

7 In terms of gains or losses, players select their particular strategies can be represented in form of a matrix, is called _____.

(A) Minima (B) Maxima (C) Payoff (D) None of these

8 Each player has available to him an infinite number of possible strategies. The list may not be the same for each player.

(A) True (B) False

9 For Player A the minimum value in each row represent the least gain to him, if he chooses his particular strategy. These are written in the payoff matrix by _____.

(A) Minimum (B) maximum (C) row minima (D) column maxima

10 The value of the game, in general satisfies which of the following relation.

(A) $maximin\ value \leq V \leq minimax\ value$
(B) $maximin\ value < V \leq minimax\ value$
(C) $maximin\ value \leq V < minimax\ value$
(D) $maximin\ value = V = minimax\ value$

11 The time during which a machine does not have a job to process is called ____ time.

(A) free (B) idle (C) elapsed (D) processing

12 The sequencing techniques deals with the problem of preparing _____ timetable for jobs, equipment, people, materials, facilities and all other resources that are needed to support the production schedules to give low costs and high utilizations.

(A) proper (B) different (C) optimal (D) none of these

13 Optimal sequence obtained by Johnson's procedure is always unique.

(A) True (B) False

14 The objective of Job sequencing is the minimization of _____ time between the completion of the first and last job in a particular order.

(A) Total elapsed (B) idle (C) free (D) All

15 The number of machines refer to the number of _____ through which a job must pass before it is assumed to be completed.

(A) tasks (B) jobs (C) service facilities (D) None of these

16 _____ refers to the order (sequence) in which machines are required for completing the job.

(A) Processing time (B) Processing order (C) Given table (D) None of these

17 Total elapsed time includes the idle time of each machine.

(A) True (B) False

Atmiya University Rajkot

18 If n jobs are to be processed on two machines M and N in the order M N, then each job can go first to any of the machine M or N.

(A) True (B) False

19 In Job sequencing, the time taken by the job in moving from one machine to another is _____.

(A) not avoidable (B) different (C) may be same (D) negligible

20 In Job sequencing, all the jobs are known and they are ready for processing before the period under consideration begins.

(A) Agree (B) Disagree

21 PERT means _____.

(A) Project Evaluation & Review Technique
(B) Project Evaluation & Repair Technique
(C) Programme Elimination & Review Technique
(D) Programme Evaluation & Review Technique.

22 CPM means _____

(A) Constant Path Method
(B) Casual Path Method
(C) Critical Path Method
(D) Continuous Path Method

23 PERT is also called _____

(A) Event oriented technique
(B) Value oriented technique
(C) Time oriented technique
(D) Network oriented technique

24 Which is/are the phases of project management?

(A) Project planning phase
(B) Scheduling phase
(C) Project control phase
(D) All of these

25 An event which represents the joint completion of more than one activity is known as _____ event.

(A) Burst (B) Merge (C) Joint (D) None of these

Atmiya University Rajkot

26 Looping and Dangling are considered as faults in network.

(A) Agree (B) Disagree

27 When two or more parallel activities in a project have the same head and tail events then _____ activity is added.

(A) Successor (B) Dummy (C) Predecessor (D) None of these

28 _____ time is the shortest possible time in which an activity can be performed assuming that everything goes well.

(A) Most likely (B) Pessimistic (C) Optimistic (D) None of these

29 An activity which starts immediately after one or more of other activities are completed is known as _____ activity.

(A) Successor (B) Dummy (C) Predecessor (D) None of these

30 _____ is the length of time in which a non-critical activity can be delayed or extended without delaying the total project completion time.

(A) Float (B) Slack (C) Free time (D) All of these

31 The problem of _____ is felt when the job performing units such as machines, equipments etc, become less effective or useless due to either sudden failure or breakdown.

(A) Replacement (B) service (C) cost (D) value

32 Sudden failure can be further categorised into _____.

(A) Progressive (B) Retrogressive (C) Random (D) All of these

33 If the probability of failure of an item increases with the increase in its life, then such a failure is called _____ failure.

(A) sudden (B) gradual (C) progressive (D) random

34 Replacement policy can be classified into _____.

(A) Individual (B) Group (C) A & B both (D) None of these

35 If the probability of failure in the beginning of the life of an item is more but as time passes the chances of its failure become less, such a failure is said to be _____.

(A) Progressive (B) retrogressive (C) random (D) sudden

Atmiya University Rajkot

36 The simple engineering company has a machine whose purchase price is Rs. 80,000. The expected maintenance costs and resale price in different years are as given below. After what time interval (year) should the machine be replaced according to your opinion?

Year	1	2	3	4	5	6	7
Maintenance Cost (Rs.)	1000	1200	1600	2400	3000	3900	5000
Resale Value (Rs.)	75000	72000	70000	65000	58000	50000	45000

(A) 3rd year (B) 4th year (C) 5th year (D) 6th year

37 What are the major components of structure of a queuing system?

(A) Calling population (B) queuing process (C) service process (D) All of these

38 Potential customers who arrive to the queuing system is refereed as _____.

(A) Calling population (B) queuing process (C) service process (D) None

39 The arrivals or inputs to the system (calling population) are characterized by _____.

(A) Size of calling population
(B) Behaviour of the arrivals
(C) Pattern of arrivals at the system
(D) All of above

40 If a customer, on arriving at the service system waits in the queue until served and does not switch between waiting lines, such a customer is called _____ customer.

(A) Impatient (B) indiscipline (C) patient (D) regular

41 Customers, after joining the queue, wait for some time in the queue but leave before being served on account of certain reasons are known as _____.

(A) Balking (B) reneging (C) jockeying (D) none of these

42 The arrival process (pattern) of customers to the service system is classified into _____ arrival process.

(A) Static (B) Dynamic (C) A & B both (D) none of these

43 In static queue disciplines, customers are served in the order _____.

(A) First come first served
(B) Last come first served
(C) A & B both
(D) None of these

Atmiya University Rajkot

44 Traffic intensity is defined as $\rho =$ _____.

(A) $\frac{\lambda}{\mu}$ (B) $\frac{\mu}{\lambda}$ (C) $\lambda - \mu$ (D) $\mu - \lambda$

45 Expected number of customers in the service (system) is defined as $L_s =$ _____.

(A) $\frac{\rho}{1+\rho}$ (B) $\frac{\rho+1}{\rho}$ (C) $\frac{\rho-1}{\rho}$ (D) $\frac{\rho}{1-\rho}$

46 Expected waiting time of customer in the system is defined as $W_s =$ _____.

(A) $\frac{1}{\mu+\lambda}$ (B) $\frac{1}{\mu-\lambda}$ (C) $\frac{\lambda}{\mu(\mu-\lambda)}$ (D) $\frac{\lambda}{\mu(\mu+\lambda)}$

Dr. Parag Ajani

Atmiya University
Rajkot

Atmiya University, Rajkot

MSc Mathematics: Complex Analysis

Code : 21MMTCC301 / Semester – III

Question Bank

1 marks:

1. The derivative of branch of logarithm function $f(z)$ is …
2. What is the equation $|z - i| = 5$ represents?
3. Let $G \subset C$ be open and $f: G \to C$ be continuously differentiable with primitive $F: G \to C$ and $\gamma: [a, b] \to C$ be rectifiable path. If γ is closed curve then $\int_\gamma f$=…
4. $\exp\left(\frac{1}{z}\right)$ has ….. singularity at $z = 0$.
5. The number of roots of the equation $z^5 + 3z^2 + 1 = 0$ in $1 < |z| < 2$ is
6. For a complex number z, $z^2=(\bar{z})^2$ if and only if z is ……
7. Let $\gamma: [a, b] \to C$ be a bounded function. What is the relation between $v(\gamma: P)$ and $v(\gamma: Q)$ if P and Q are partitions of $[a, b]$ such that $P \subset Q$?
8. Let $f: G \subset C \to C$ be continuous with primitive $F: G \to C$ and $\gamma: [a, b] \to C$ be a rectifiable curve. Then $\int_\gamma f$=……..
9. Define removable singularity of a function $f(z)$.
10. $Res\left(\sin\left(\frac{1}{z}\right), 0\right)$=…

5 Marks/ 7 marks

1. Define branch of a logarithm.
   Prove the following statement: If $G \subset C$ is open and connected and, f is a branch of $\log z$ on G then, the totality of branches of $\log z$ are the functions $f(z) + i2k\pi$; $k \in Z$.
2. What do you mean by domain of a complex function?
   Describe the domain of the functions:
   (i) $f(z) = \frac{1}{z^2+1}$
   (ii) $f(z) = \frac{z}{z+\bar{z}}$
3. Prove that every non decreasing function $\gamma: [a, b] \to C$ is a function of bounded variation.
4. Let $\gamma: [a, b] \to C$ defined by $\gamma(t) = tb + (1 - t)a; 0 \le t \le 1$ and $f(z) = z^n$
   (i) Is γ smooth?

Atmiya University Rajkot

(ii) Evaluate $\int_\gamma z^n \, dz$

5. State and prove maximum modulus theorem.
6. Show that $\int_0^{2\pi} \frac{e^{iS}}{e^{iS}-z} \, dS = 2\pi; \forall z \in C, |z| < 1$
7. Write the principal part of the functions given at its isolated singular point and determine whether that point is a pole, a removable singular point or an essential singular point.
   (i) $\frac{z^2}{1+z}$
   (ii) $z.\exp\frac{1}{z}$
8. If f has an isolated singularity at a then, the point $z = a$ is a removable singularity if and only if $\lim_{z\to a}(z-a)f(z) = 0$
9. If f has a pole of order n at z_0 then, prove that $Res(f(z), z_0) = \frac{1}{(n-1)!}\frac{d^{n-1}}{dz^{n-1}}(z - z_0)^n f(z)$
10. Evaluate:
    (i) $Res\left(\frac{1-e^{2z}}{z^4}, poles\right)$
    (ii) $Res\left(\frac{1}{z(e^z-1)}, 0\right)$
11. Discuss the mapping $w = z^2$
12. State and prove Cauchy Riemann conditions for a function to be analytic in polar coordinates.
13. Explain Riemann Stetljes integral
14. Show, by an example, every path need not be a rectifiable path
15. State and prove Cauchy's integral formula first version
16. State and prove Cauchy Goursat Theorem
17. Describe the Laurent series development of the function $f(z)$ in the $ann(a, R_1, R_2)$ as $f(z) = \sum_{n=-\infty}^{\infty} a_n(z-a)^n$
18. Classify the types of singularities using Laurent's series
19. State and prove Cauchy Residue Theorem
20. Evaluate:
    (i) $\int_{|z|=2} \tan z \, dz$
    (ii) $\int_{|z|=2} \frac{e^{-z}}{(z-1)^2} dz$
    (iii) $\int_{|z+2|=3} \frac{dz}{z^3(z+4)}$
21. Find the cube root of unity.
22. Obtain Cauchy Riemann conditions in Cartesian coordinates for the analytic function

Atmiya University Rajkot

$f(z) = u + iv$.

23 State and prove "Fundamental Theorem of Algebra".

24 Use Leibniz rule to evaluate $\int_0^{2\pi} \frac{e^{is}}{e^{is}-z}\, ds, \forall z \in C, |z| < 1$.

25 Which subset of the unit sphere S correspond to the real and imaginary axes in C ?

26 State and prove the Fundamental Theorem of Calculus for line integral.

27 Derive the formula for finding the residue of $f(z)$ at $z = z_0$ when the order of the pole is m.

28 State and prove Cauchy's Residue Theorem.

29 Apply Rouche's theorem to find the number of roots of the equation $z^8 + 3z^3 + 7z + 5 = 0$ in the first quadrant.

30 Prove the statement: If f has a pole of order n at z_0, then $Res(f(z), z_0) = \frac{1}{(n-1)!}\frac{d^{n-1}}{dz^{n-1}}((z - z_0)^n . f(z))$

31 Discuss the mapping $w = z^n$.

32 Give an example of a path which is not rectifiable.

33 Explain Riemann Steieltjes integral.

34 State and prove Morera's theorem.

35 State and prove: "Cauchy's integral formula", the first version.

36 Evaluate $\int_0^{2\pi} \frac{d\theta}{2+\cos\theta}$ using Cauchy's residue theorem.

37 Classify and explain the isolated singularities using Laurent's series.

38 Show that $\int_0^{\infty} \frac{dx}{x^4+a^4}; a > 0$. (Use Cauchy's residue theorem)

39 Classify the types of singularities at z_0 in detail, with the help of Laurent's series in $ann(z_0; 0, R)$ for the function $f(z) = \sum_{-\infty}^{\infty} a_n (z - z_0)^n$.

40 Using Cauchy's Residue Theorem, evaluate $\int_{|z|=4} \frac{3z^2+2}{(z-1)(z^2+9)} dz$

41. Obtain all the solutions of the equation $w = e^z$

42. If S is a mobius transformation then prove that S is the composition of translations, dilations, and the inversion.

43. Let $\gamma: [a, b] \to C$ be of bounded variation. If P and Q are partitions of $[a, b]$ and $P \subset Q$ then show that $v(\gamma, P) \leq v(\gamma, Q)$

44. Prove by Leibnitz's rule, $\int_0^{2\pi} \frac{e^{is}}{e^{is}-z}\, ds = 2\pi, \ \forall z \in C, \ |z| = 1$

45. Evaluate $\int_{\gamma} \frac{\log z}{z^n} dz; \ \gamma(t) = 1 + \frac{1}{2}e^{it}; \ 0 \leq t \leq 2\pi$

46. State and prove Fundamental theorem of Algebra

47. Prove: If f has an isolated singularity at z_0 then the point z_0 is a removable singularity if and only if $\lim_{z \to z_0}(z - z_0)f(z) = 0$

48. Prove that a rational function has no singularities other than poles.

49. Using Cauchy Residue Theorem evaluate $\int_{|z-1|=1} \frac{2z^2+z}{z^2-1} dz$

Atmiya University Rajkot

50. Show that the roots of $16z^2 - z + 8 = 0$ all lie in the annulus between $|z| = \frac{1}{2}$ and $|z| = 1$

51. If $G \subseteq C$ is open and connected, and f is a branch of $\log z$ on G then the totality of branches of $\log z$ are functions $f(z) + i2k\pi;\ k \in Z$

52. State and prove the **sufficient** condition for a function to be analytic.

53. Discuss the mapping $w = \frac{1}{z}$

54. Describe the Riemann Stieltjes integral with proof.

55. Show by example that every path need not be a rectifiable path.

56. State and prove Morera's theorem.

57. Explain the classification of singularities with proof.

58. Find the residues of the function $\frac{z^3}{(z-a)(z-b)(z-c)}$ at their poles and at infinity, and hence find their sum.

59. State and prove Cauchy Residue theorem

60. Show that $\int_0^{2\pi} \frac{d\theta}{2+\cos\theta} = \frac{2\pi}{\sqrt{3}}$

Atmiya University
Rajkot

ATMIYA UNIVERSITY
(Established under the Gujarat Private University Act 11, 2018)
Yogidham Gurukul, Kalawad Road, Rajkot - 360005, Gujarat (INDIA)

Science
Mathematics
Course Code-21MMTCC404
Core 16: Mathematical Statistics (Ad)
PG-Semester IV-Student
Question Bank

1. The mean height obtained from a random sample of size 100 is 64 inches. The standard deviation of distribution of height is known to be 3 inches. Test the statement that mean height of population is 67 inches at 5% level of significance.

2. A sample of 100 tires are taken from a lot. The mean life of tires is found to be 39,350 kms with population standard deviation of 3260 kms. Could the sample come from a population with mean of 40,000 kms?(Take _ = 0:05)

3. The mean life of a sample of 400 florescent light bulbs produced by the company is found to be 1570 hrs with a standard deviation of 150 hrs. Test the hypothesis that the mean life of light bulbs produced by the company is 1600 hrs against alternative hypothesis that is mean life is less than 1600 hrs at 1% level of significance.

4. A random sample of size 16 has 53 as mean. The sum of the square of deviation taken from mean is 135. Can this sample be regarded as taken from the population having mean as 56? (Take _ = 0:05).

5. The manufacturer of a certain types of bulb claims that this bulb have a mean of 25 months with a standard deviation of 5 months. A random sample of 6 such bulb gave following values 24, 26, 30, 20, 20, 18. Can you regards the manufacturer's claim to be valid at 1% level of significance?

6. A person must score in the upper 2% of the population on an IQ test to qualify for membership in Mensa, the international high-IQ society (U.S. Airways Attaché, September 2000). If IQ scores are normally distributed with a mean of 100 and a standard deviation of 15, what score must a person have to qualify for Mensa? The mean hourly pay rate for financial managers in the East North Central region is $32.62, and the standard deviation is $2.32 (Bureau of Labor Statistics, September 2005). Assume that pay rates are normally distributed.

Atmiya University Rajkot

a. What is the probability a financial manager earns between $30 and $35 per hour?
b. How high must the hourly rate be to put a financial manager in the top 10% with respect to pay?
c. For a randomly selected financial manager, what is the probability the manager earned less than $28 per hour?

7. A survey of magazine subscribers showed that 45.8% rented a car during the past 12 months for business reasons, 54% rented a car during the past 12 months for personal reasons, and 30% rented a car during the past 12 months for both business and personal reasons.
   a) What is the probability that a subscriber rented a car during the past 12 months for
   business or personal reasons?
   b) What is the probability that a subscriber did not rent a car during the past 12 months for either business or personal reasons?

Mr. Kalpesh M. Popat
Dept of Mathematics,
Atmiya University

Copy to:

1. Dept. Notice Board

Atmiya University Rajkot

ATMIYA UNIVERSITY

Question Bank

Faculty of Science

M.Sc. Mathematics

21MMTCC401 – Advanced Topics in Number Theory

Semester – IV

Part A

Answer **ALL** questions

1. State: Euclid theorem.
2. Define: Residue system modulo m.
3. Is given Diophantine equation $5x + 3y = 52$ is solvable?
4. The simple continued fraction expansion has an alternate form. (True/False)
5. Define: Quadratic irrational number.
6. State the division algorithm.
7. Define the Euclidean Algorithm.
8. Define Diophantine equation.
9. Write any one properties of Farey fraction.
10. For sequence of integer h_n, the value of $h_1 =$ ____.

Part B

Answer **ALL** questions

1. Find the x and y for $42823x + 6409y = g$, where $g = (42823,6409)$.
2. Find the least common multiple of 657 and 963.
3. Evaluate $\emptyset(m)$ for $1 \leq m \leq 12$.
4. Show that $7|(3^{2n+1} + 2^{n+2})$ for all n.
5. Show that the equation $15x^2 - 7y^2 = 9$ has no solution in integers.
6. Show that the equation $x^2 + y^2 = 9z + 3$ has no solution in integers.
7. If $0 \leq x \leq y, (x, y) = 1$, then show that the fraction $\frac{x}{y}$ appears in the yth and all later rows.
8. Convert into rational no. a) $\langle 2,1,4 \rangle$ and b) $\langle 0,1,1,100 \rangle$.
9. Evaluate infinite continued fraction $\langle 1,1, \ldots \rangle$ and $\langle 1,2,1,2, \ldots \rangle$.
10. Expand $\sqrt{15}$ and $\sqrt{2} - 1$ as infinite simple continued fraction.
11. If $(a, 4) = 2, (b, 4) = 2$ then prove that $(a + b, 4) = 4$.
12. Prove that $n^6 - 1$ is divisible by 7, if $(n, 7) = 1$.
13. Give any one real life application of LDE.
14. Show that there is no x for which $x \equiv 29(mod52)$ and $x \equiv 19(mod72)$.
15. The equation $x^3 + 2y^3 + 4z^3 = 9w^3$ has no non trivial solution in integer.
16. The Diophantine equation $y^3 = x^3 + 7$ has no solution.
17. Expand into rational $\langle 2,1,4 \rangle$ and $\langle -3,2,1,2 \rangle$.
18. Convert into continued fraction $\frac{17}{3}$, 8, and $\frac{51}{22}$.
19. Convert into irrational $\langle 1,2,1,2, \ldots \rangle$ and $\langle 1,1, \ldots \rangle$.
20. Expand into continued fraction $\sqrt{2} + 1$ and $\frac{\sqrt{5}+1}{2}$.

Atmiya University Rajkot

Part C

Answer **ALL** questions

1. If $p|(a_1 a_2 \cdots a_n)$, then show that p divides at least one factor a_i of the product.
2. State and prove the fundamental theorem of arithmetic.
3. Write a note on Chinese remainder theorem.
4. State and prove Fermat's theorem.
5. Show that the Diophantine equation $x^2 = y^3 + 7$ has no solution in integer.
6. Prove that the Diophantine equation $x^4 + x^3 + x^2 + x + 1 = y^2$ has the integral solution $(-1,1), (0,1), (3,11)$, and no other.
7. If n is a positive integer and x is real number then show that there is a rational number $a|b$ s.t. $0 < b \leq n$, $\left|x - \frac{a}{b}\right| < \frac{1}{b(n+1)}$.
8. Write a note on properties of Farey fraction.
9. Prove that for any irrational number x there exists infinitely many rational numbers $\frac{p}{q}$ such that $\left|x - \frac{p}{q}\right| < \frac{1}{\sqrt{5}q^2}$.
10. Show that $\lim_{n\to\infty} r_n$ exists.
11. State and prove the Fundamental theorem on Arithmetic.
12. State and prove any two properties of gcd.
13. State and prove the Euler's generalization of Fermat's theorem.
14. Explain Chinese remainder theorem with example.
15. State and prove necessary and sufficient condition for solution of linear Diophantine equation.
16. Show that Diophantine equation $x^2 = y^3 + 7$ has no solution.
17. State and prove Hurwitz theorem.
18. Show that any rational number can be expressed as a value of some finite simple continued fraction.
19. Discuss the convergence of (r_n).
20. Prove that an irrational number θ is quadratic irrational if it's simple continued fraction is periodic.

ATMIYA University, Rajkot
Faculty of Science
Department of Mathematics
AY: 2022-23

ACADEMIC ACTIVITIES

Question Bank: MSc Mathematics Sem– 4

Subject: Graph Theory (21MMTCC403)

1 Define: Degree of a vertex with example. Also state and prove First theorem of graph theory.

2 Define: Spanning subgraph with example

3 Define: Closure of a graph

4 Define: Bipartite graph. State and prove characterization of bipartite graph

5 Define: Incidence matrix with at least two observation

6 Define: Maximal non Hamiltonian graph

7 Define: Weighted graph.

8 Define: Map colouring.

9 Define: State Jordon curve theorem

10 Let G be a simple planar graph with n-vertices and e-edges, where $n \geq 3$. Then $e \leq 3n-6$.

11 Prove the following statements are equivalent for a connected graph G.

(1) Graph G is Eulerian.

(2) Every vertex of G has even degree.

(3) Edge set of G can be partitioned into disjoint cycles

12 State and prove Euler's formula.

13 Define: Subdivision of a graph. Prove that: Let G be a simple 3-connected graph. If G contains a subgraph which is a subdivision of K_5 or $K_{3,3}$ then G is planar

Dr. Parag Ajani

Atmiya University Rajkot

ATMIYA UNIVERSITY
(Established under the Gujarat Private University Act 11, 2018)
Yogidham Gurukul, Kalawad Road, Rajkot - 360005, Gujarat (INDIA)

Science
Mathematics

M.Sc.-Sem 4-Course Code-21MMTCC402-Core 14: Functional Analysis (Ad)

Question Bank
PG-Semester IV-Student

1. The metric $d(x,y)$ in l^2 where $x = (x_j)$ and $y = (y_j)$ is....
2. Let f be a bounded linear functional on $C[a,b]$, defined by $f(x) = \int_a^b x(t)dt$ then $\|f\| = \ldots$
3. Can every metric on a vector space be obtained from a norm? Justify your answer.
4. If $\|.\|_1$ and $\|.\|_2$ are equivalent norms on X, show that the Cauchy sequences in $(X, \|.\|_1)$ and $(X, \|.\|_2)$ are same.
5. Show that equivalent norms on a vector space X induce the same topology for X.
6. Prove that, if $\{x_1, x_2, \ldots, x_n\}$ be a linearly independent set of vectors in a normed space X, then there is a number $c > 0$ such that for every choice of scalars $\alpha_1, \alpha_2, \ldots, \alpha_n$ we have $\|\alpha_1 x_1 + \alpha_2 x_2 + \cdots + \alpha_n x_n\| > c(|\alpha_1| + |\alpha_2| + \cdots + |\alpha_2|)$.
7. State and prove F. Riesz's lemma.
8. Let X be the set of all continuous real valued functions on [0,1] and $d(x,y) = \int_0^1 |x(t) - y(t)|\, dt$, the write the comment about the completeness of the space (X,d). Justify your answer.
9. Prove that in a finite dimensional normed space X, if any subset is closed and bounded then it is compact.
10. Prove that every finite dimensional normed space is complete.
11. Let f be a bounded linear functional on $C[a,b]$, defined by $f(x) = \int_a^b x(t)dt$ then $\|f\| = \ldots$
12. How can we define norm in an l^p space?
13. Define Banach space with an example.
14. Let T be a bounded linear operator then $N(T)$ is a ....
15. $\dim(R^n)^{**} = \ldots.$

Atmiya University Rajkot

16. How a linear operator differs by a bounded linear operator?
17. Explain three non Banach spaces.
18. How can we define norm of a bounded linear operator?
19. Prove: If a normed space X is finite dimensional then every linear operator on X is bounded.

20. Prove that if $\dim D(T)$ is finite and T^{-1} exists, then $\dim R(T) = \dim D(T)$.
21. Prove the statement: The dual space X' of a normed space X is a Banach space.
22. Let X and Y be vector spaces, both real or both complex. Let $T: D(T) \to Y$ be a linear operator with domain $D(T) \subset X$ and range $R(T) \subset Y$. Then show that T^{-1} exists if and only if $Tx = 0 \Rightarrow x = 0$.
23. Let $T: D(T) \to Y$ be a linear operator, $D(T) \subset X$ and, X and Y are normed spaces. Then prove that T is continuous if and only if T is bounded.
24. Let T be a bounded linear operator. Prove that norm of T satisfies conditions on norms.
25. Show that the space l^p $(p \neq 2)$ is not a Hilbert space.
26. Let $x \neq 0, y \neq 0$. If $x \perp y$, then show that $\{x, y\}$ is a linearly independent set.
27. Show that an orthonormal set is linearly independent.
28. State and prove Bessel's inequality.
29. Orthonormalize the first three terms of the sequence $(x_0, x_1, x_2, \ldots)$ where $x_j(t) = t^j$ on $[-1,1]$ where $\langle x, y \rangle = \int_{-1}^{1} x(t)y(t)dt$
30. What is norm of a bounded linear functional of a vector from Hilbert sequence space?
31. Show that the differentiation operator is not always a bounded linear operator.
32. Prove that the null space of a linear operator is a closed vector space.
33. State Pythagorean relation for norms.
34. Show by an example that $C[a, b]$ is not a Hilbert space.
35. Prove the following: An orthonormal set M in a Hilbert space H is total in H if and only if for all $x \in H$, the Parseval relation $\sum_k |< x, e_k >|^2 = \|x\|^2$ holds.
36. State and prove Schwarz inequality.
37. Let H_1 and H_2 be Hilbert space. $S: H_1 \to H_2$ and $T: H_1 \to H_2$ be two bounded linear operators then show that: i) $(ST)^* = T^*S^*$ ii) $\|T^*T\| = \|TT^*\| = \|T\|^2$

(all similar results)

Atmiya University Rajkot

38. If S and T are bounded self adjoint linear operator on a Hilbert space H and, α and β are real, show that $\tilde{T} = \alpha S + \beta T$ is also self adjoint. Is T^n; n is a positive integer, self adjoint? Justify your answer.
39. State and prove Riesz' representation theorem for functionals.
40. Riesz representation theorem for sesquilinear form.
41. Find the Fourier series for $x(t) = \begin{cases} t, & -\frac{\pi}{2} \le t < \frac{\pi}{2} \\ \pi - t, & \frac{\pi}{2} \le t < \frac{3\pi}{2} \end{cases}$
42. Apply Zorn's lemma to prove the statement: For every Hilbert space $H \neq \{0\}$ there exist a total orthonormal set.
43. Discuss any one application of Zorn's lemma.
44. Let the operators $U : H \to H$ and $V : H \to H$ be unitary then show that

a) U is isometry with $\|U\|=1$.

b) U^{-1} is unitary and UV is also unitary.

45. Given S and T are bounded self adjoint linear operator on a Hilbert space H and α, β are real. Then show that $\alpha S + \beta T$ is self adjoint. Is T^n; n is a positive integer, self adjoint? Justify your answer.
46. Give an example of the operator which is normal, but is neither self adjoint nor unitary. Justify your statement(s).
47. Explain Generalized Hahn Banach Theorem.
48. Explain Hahn Banach Theorem for normed spaces.
49. Prove the statement: A bounded linear operator T on a complex Hilbert space H is unitary if and only if T is isometric and surjective.
50. Explain the theorem that provides the existence of Hilbert Adjoint Operator of the bounded linear operator $T: H_1 \to H_2$; where H_1 and H_2 are Hilbert spaces.
51. Let H_1 and H_2 be Hilbert space and $T: H_1 \to H_2$ is a bounded linear operator then show that $\|T^*T\| = \|TT^*\| = \|T\|^2$.

Ms. Rakhi V. Isaac
Dept of Mathematics,
Atmiya University

Atmiya University
Rajkot

JAVA (23UGCE304) Question Bank

1	Why Java is platform independent?
2	What is JRE JDK and JVM
3	Demonstrate Method overloading with Example
4	Write a program that calculates percentage marks of the student if marks of 6 subjects are given.
5	Explain use of Interface with Example
6	Write a program to find length of string and print second half of the string.
7	Explain Different types of access specifier
8	What is requirement of throws keyword ,explain using example.
9	Differentiate Inputstream and outputstream
10	Explain Methodoverriding with example
11	What is Bytecode?
12	Demonstrate Constructor overloading with detail Example
13	Write a Java program to perform Sum and Multiplication of numbers within given Range
14	Explain Types of Inheritance in Java with appropriate Example
15	Demonstrate use of Super keyword
16	Explain Different types of access specifier
17	When finally, block is executed explain using example
18	Explain Different types of streams in Java
19	Describe the following methods related to String() replace()ii) compareTo()
20	What is wrapper class? What is the use of wrapper class in Java?
21	Explain memory management (garbage collection) in java.

22	What is purpose of static and this keyword with example.

23	Explain Thread lifecycle and describe creation of thread with suitable example
24	What is the effect of adding synchronized keyword to a method?
25	Write a program using BufferedInputStream,FileInputStream,BufferedOutputStream,FileOutputStream to copy Content of one file**Test1.txt** into another file**Test2.txt**.
26	Explain use of Linked List collection class with example.
27	Write a program to take three numbers as commandline argument. Display the maximum among them
28	Explain features of JAVA
29	WAP to find prime number from1to100
30	Demonstrate Dynamic Method Dispatch with example
31	Write a program to create two threads, one thread will print odd numbers and second thread will. Print even Numbers between 1 to20 numbers
32	Explain Exception propagation with example.
33	Explain Types of Inheritance in Java.
34	Write a program to differentiate between pass by value and pass by reference.
35	Program a box and also implement methods to print its area, volume and a method to double the size of the box. (pass object as an argument)
36	Write a program that illustrates interface inheritance. Interface P is extended by P1 and P2.Interface P12 inheritsfrom both P1and P2.Each interface declares one constant and one method. class Qimplements P12. Instantiate Q and invoke Each of its methods . Each method displays one of the constants
37	Runtime Polymorphism with example
38	Write an application that creates and starts three threads. Each thread is instantiated from the same class. It executes A loop with10 iterations. Each iteration displays string "HELLO",sleeps for 300 milliseconds.
39	Write a program to count the total no.ofchars, words, lines, alphabets, digits, whitespaces in a given file.

40	WAP to demonstrate Custom Exception in java.

41	ExplainTry,catch,throw,final,finallywithsuitableexample.
42	ExplainSocket&ServerSocketclasswithsuitableexample
43	WriteJavanetworkingProgramming serverclientchatapplicationwithusingTCP
44	WriteJavanetworkingProgrammingserverclientchatapplicationwithusingUDP

ATMIYA UNIVERSITY
(Established under the Gujarat Private University Act 11, 2018)
Yogidham Gurukul, Kalawad Road, Rajkot - 360005, Gujarat (INDIA)

Science
Chemistry
Mathematical Tools for Basic Sciences
Question Bank
UG-Semester IV-Student

1. Define: Union operation.
   Let $U = \{1,2,3,4,5,6,7,8,9,10\}, A = \{2,4\}, B = \{2,4,5,6\}, C = \{1,8\}, D = \{1,3,8,9\}$ then find$(i) A \cap B \cap D, (ii) A \cap (B \cup D), (iii)(A \cup B) \cap (B \cup C), (iv)(A \cup D) \cap (B \cup C), (v)(A \cup C)'$.

2. Let $U = \{1,2,3,4,5,6\}, A = \{1,2,4\}, B = \{4,5,6\}, C = \{1,4,5\}$ then
   (1) Verify De Morgan's law (2) Also show that $A - B, B - A and A \cap B$ are mutually disjoint.

3. (i) Draw the Venn diagram of$A \cap (B \cup C)$.
   (ii) In a school there are 20 teachers who teach mathematics or physics. Of these, 12 teach mathematics and 4 teach both mathematics and physics. How many teach physics?

4. Let $U = \{1,2,3,4,5,6,7,8\}, A = \{1,2,3,4,5\}, B = \{1,3,5,6\}, C = \{1,2,3\}$ then find
   (1) $(A \cup B)$ (2) $(A \cap B)$ (3) $(A - B)$ (4) $(B - A)$ (5)$(A - C)$.

   Also verify the followings,
   (1) $(A - B) \cup B = (A \cup B)$ (2) $(A - B) \cup (B - A) = (A \cup B) - (A \cap B)$

   (3) $(A - C) = A - (A \cap C)$ (4) $(A \cup B)' = A' \cap B'$
5. Prove the properties of union, intersection and complement of a set with examples.

6. Draw the following Venn diagrams :
   (i) $A' \cup B'$
   (ii) $(A - B)'$
   (iii) $A' \cap B'$
   (iv) Let $U = \{1,2,3,\ldots,10\}$ be the universal set and $A = \{2,4,6,8,10\} \& B = \{4,6\}$ are subsets of U then draw its Venn diagram.

7. Let$U = \{1,2,3,4,5,6\}, A = \{2,3\}$, B=$\{3,4,5\}$.
   Show that$A' \cap B' = (A \cup B)'$.
8. There are 400 persons with a skin disorder,240 had been exposed to the chemical A,100 to chemical B and 60 to both chemicals A & B. Find the number of persons exposed to
   (i) chemical A but not chemical B.

Atmiya University Rajkot

(ii) chemical B but not chemical A.

(iii) chemical A or chemical B.

9. Define curl, divergence, gradient and its examples.

10 Find the gradient of $(x, y, z) = x^2 + y^3 + z^4$.

11 Define solenoidal vector and irrotational vector and give its examples.

12 Find the divergence of $f = x^2z\hat{\imath} - 2y^3z^2\hat{\jmath} + xy^2z\hat{k}$ at the point $(1, -1, 1)$.

13 (i) Define Curl.

(ii) If $f = x^2y\hat{\imath} - 2xz\hat{\jmath} + 2yz\hat{k}$ then find $curl\bar{f}$.

14 (i) Define Solenoidal function.

(ii) If a vector function $\bar{f} = (x^3z - axyz)\hat{\imath} + (xy - 3x^2yz)\hat{\jmath} + (yz^2 - xz)\hat{k}$ is solenoidal then find the value of a.

15 Find curl of $\bar{A} = e^{xyz}(\hat{\imath} + \hat{\jmath} + \hat{k})$ at the point $(1, 2, 3)$.

16 If $\bar{A} = \nabla(xy + yz + zx)$, find $\nabla \cdot \bar{A}$ and $\nabla \times \bar{A}$.

17 Define Gradient, find $\nabla\varphi$ where $\varphi = 3x^2y - y^3z^2$ at $(1, -2, 1)$.

18 Show that $\bar{A} = 3y^4z^2\hat{\imath} + 4x^3z^2\hat{\jmath} - 3x^2y^2\hat{k}$ is solenoidal.

19 (i) Evaluate $\int \frac{2 - 3sinx}{cos^2x}\,dx$ (ii) Evaluate $\int_{-1}^{1} xe^x dx$.

20 (i) Evaluate $\int_0^{\frac{\pi}{2}} cos2x\,dx$ (ii) Evaluate $\int \left(\sqrt{x} - \frac{1}{\sqrt{x}}\right)^2 dx$.

21 Evaluate $\int \frac{x^3+3x+4}{\sqrt{x}}\,dx$.

22 Evaluate $\int x^2e^x dx$.

23 Let $A = \begin{bmatrix} 0 & 1 & -2 \\ 3 & -4 & 5 \end{bmatrix}$ and $B = \begin{bmatrix} -2 & -1 & 2 \\ 3 & 5 & 0 \end{bmatrix}$. Find $2A - 3B$.

24 Let $A = \begin{bmatrix} 2 & 1 & 3 \\ 3 & 2 & 5 \end{bmatrix}$ and $B = \begin{bmatrix} 1 & 2 & 3 \\ 3 & 2 & 6 \\ 5 & 1 & 1 \end{bmatrix}$. Find AB.

25 If $A = \begin{bmatrix} 1 & -1 & 2 \\ 2 & 0 & 1 \\ 1 & 1 & 0 \end{bmatrix}$ then find adjoint of A.

26 Find the determinant of matrix $A = \begin{bmatrix} -3 & -6 & 7 \\ 1 & 1 & -1 \\ -4 & -6 & 8 \end{bmatrix}$.

27 Find the determinant if matrix $A = \begin{bmatrix} -1 & 2 & 3 \\ 0 & -3 & 9 \\ 2 & 4 & -1 \end{bmatrix}$.

28 Find the minors and cofactors of each element of $A = \begin{vmatrix} 2 & -3 & 4 \\ 1 & 0 & -2 \\ 2 & 0 & -2 \end{vmatrix}$.

Atmiya University Rajkot

29 Let $A = \begin{bmatrix} -1 & 2 & 3 \\ 0 & 1 & -2 \\ 3 & -5 & 0 \end{bmatrix}$ and $B = \begin{bmatrix} 2 & -1 & 0 \\ -3 & 2 & 1 \\ 4 & 0 & 6 \end{bmatrix}$ then find AB and BA.

30 Find the Eigen values and Eigen vectors of matrix $A = \begin{bmatrix} 2 & 1 \\ 3 & 4 \end{bmatrix}$.

31 Find the inverse of matrix $A = \begin{bmatrix} 2 & 1 & -1 \\ 0 & 2 & 1 \\ 5 & 2 & -3 \end{bmatrix}$ by the Cayley Hamilton theorem.

32 Find the Eigen values of a matrix $A = \begin{bmatrix} 2 & 2 & 1 \\ 1 & 3 & 1 \\ 1 & 2 & 2 \end{bmatrix}$.

33 Find the characteristic equation of matrix $A = \begin{bmatrix} 1 & 0 & 2 \\ 0 & 2 & 1 \\ 2 & 0 & 3 \end{bmatrix}$.

34 Find the Eigen values and Eigen vectors of matrix $A = \begin{bmatrix} 5 & 3 \\ -1 & 1 \end{bmatrix}$.

35 Find the Eigen values and Eigen vectors of the matrix $A = \begin{bmatrix} 1 & 2 & 2 \\ 0 & 2 & 1 \\ -1 & 2 & 2 \end{bmatrix}$.

36 Find the inverse of the followings:

(i) $\begin{bmatrix} 0 & 1 & 1 \\ 1 & 0 & 1 \\ 1 & 1 & 0 \end{bmatrix}$

(ii) $\begin{bmatrix} 5 & 8 & 4 \\ 2 & 3 & 2 \\ 1 & 2 & 1 \end{bmatrix}$

(iii) $\begin{bmatrix} 2 & 3 & 5 \\ 1 & 2 & 7 \\ 3 & 4 & 4 \end{bmatrix}$

37 Find the echelon form of the following matrices:

(i) $\begin{bmatrix} 1 & 3 & -3 & -1 & -4 \\ 1 & 4 & 1 & -2 & -2 \\ 2 & 9 & 0 & -5 & -2 \end{bmatrix}$

(ii) $\begin{bmatrix} 1 & 3 & 4 & 3 \\ 3 & 9 & 12 & 9 \\ -1 & -3 & -4 & -3 \end{bmatrix}$

(iii) $\begin{bmatrix} 1 & 1 & -1 \\ 2 & -3 & 4 \\ 3 & -2 & 3 \end{bmatrix}$

(iv) $\begin{bmatrix} -1 & -2 & -1 \\ 6 & 12 & 6 \\ 5 & 10 & 5 \end{bmatrix}$

(v) $\begin{bmatrix} 0 & -1 & -2 \\ 8 & 9 & 10 \\ 8 & 8 & 8 \end{bmatrix}$

Atmiya University Rajkot

38. Evaluate $\int_0^{\frac{\pi}{3}} \frac{2+3\sin x}{\cos^2 x} dx$.

39. Find inverse of matrix $A = \begin{bmatrix} 1 & -1 & 2 \\ 2 & 0 & 1 \\ 1 & 1 & 0 \end{bmatrix}$.

40. Evaluate $\int_2^3 (x^2 + 2x - 1)dx$ using first fundamental theorem.

41. (i) Define periodic matrix.

(ii) Find period of matrix $A = \begin{bmatrix} -1 & -1 & -1 \\ 0 & 1 & 0 \\ 0 & 0 & 1 \end{bmatrix}$.

42. Find the characteristic equation of matrix $A = \begin{bmatrix} 2 & -1 & 1 \\ -1 & 2 & -1 \\ 1 & -1 & 2 \end{bmatrix}$.

43. (i) Define curl.

(ii) If $\bar{f} = x^2y\hat{\imath} - 2xz\hat{\jmath} + 2yz\hat{k}$ then find $curl\bar{f}$.

44. (i) Define Solenoidal function.

(ii) If $\bar{f}$ is solenoidal function then find the value ofa, where$\bar{f} = (ax + 3y + 4z)\hat{\imath} + (x - 2y + 3z)\hat{\jmath} + (3x + 2y - z)\hat{k}$.

45. (i) Define rank of matrix by row echelon form.

(ii) Find the rank of matrix $A = \begin{bmatrix} 1 & 2 & 3 \\ 2 & 3 & 4 \\ 3 & 5 & 7 \end{bmatrix}$

46. Using Cayley Hamilton Theorem, find the inverse of matrix$A = \begin{bmatrix} 1 & 0 & 2 \\ 0 & 2 & 1 \\ 2 & 0 & 3 \end{bmatrix}$.

47. Find Eigen values & Eigen vectors of matrix $A = \begin{bmatrix} 2 & 2 & 1 \\ 1 & 3 & 1 \\ 1 & 2 & 2 \end{bmatrix}$.

48. (i) Prove that $div\left(\frac{\bar{r}}{r^3}\right) = 0$.

(ii) Prove that $\nabla^2(\phi\psi) = \phi\nabla^2\psi + 2\nabla\phi\nabla\psi + \psi\nabla^2\phi$.

49. If $\bar{u} = \log(x^2 + y^2 + z^2)$ then find (i) $grad\,\bar{u}$, (ii) $div(grad\,\bar{u})$ at the point (1,2,3).

50. Evaluate $\int_0^{\frac{\pi}{4}} sin2x\ sin3x\ dx$.

51. Evaluate $\int_2^3 (x^2 + 2x - 1)dx$ using fundamental theorem for integral calculus.

52. Evaluate $\int_1^3 \frac{3}{x^2} dx$ using fundamental theorem for integral calculus.

Atmiya University Rajkot

53. Find Eigen values & Eigen vectors of matrix $A = \begin{bmatrix} 2 & 1 \\ 3 & 4 \end{bmatrix}$.

54. (iii)Define curl.

(iv)Prove that $div(\ curl\bar{f}) = 0$.

55. $\emptyset(x, y, x) = x^2y + y^2x + z^2$then find $grad\emptyset$.

56. Find the unit vector normal to the surface $x^2y + 2xz^2 = 8$ at the point (1,0,2).

57. Find the curl of $\underline{A} = e^{xyz}(i + j + k)$ at the point (1,2,3).

58. Find inverse of matrix $A = \begin{bmatrix} 7 & -3 & -3 \\ -1 & 1 & 0 \\ -1 & 0 & 1 \end{bmatrix}$.

59. (iii)Define rank of matrix by row echelon form.

(iv)Find the rank of matrix $A = \begin{bmatrix} 1 & 0 & -4 \\ 0 & -1 & 2 \\ -1 & 2 & 1 \end{bmatrix}$

60. Using Cayley Hamilton Theorem, find the inverse of matrix$A = \begin{bmatrix} 2 & -1 & 1 \\ -1 & 2 & -1 \\ 1 & -1 & 2 \end{bmatrix}$.

61. Find Eigen values & Eigen vectors of matrix $A = \begin{bmatrix} 2 & 2 & 1 \\ 1 & 3 & 1 \\ 1 & 2 & 2 \end{bmatrix}$.

62. Prove that the function $H = e^{-\lambda x}(asin\lambda y + bcos\lambda y)$ satisfies the Laplace equation where λ, a, b are constants.

63. If $\bar{u} = \log(x^2 + y^2 + z^2)$ then find (i) $grad\,\bar{u}$, (ii) $div(grad\,\bar{u})$ at the point (1,2,3).

64. Find a row echelon form of $[0 - 12323451332 - 1241]$

65. Find the adjoint of the matrix [231123312]

66. If $A = [121a04111]$ *and* $adj(adjA) = A$, find a.

67. Find the eigenvalues and eigenvectors for the matrix$[466123 - 1 - 4 - 3]$

Mrs. Nisha K. Nesadia
Dept of Mathematics,
Atmiya University

Atmiya University
Rajkot

ATMIYA UNIVERSITY

Faculty of Engineering and Technology

Department of Electrical Engineering

UG Semester – IV

Subject Name: - Economics & Business Management

Question Bank

1. **What Do You Mean By Economics? Elaborate Difference Between Micro And Macroeconomics**
2. **Explain In Detail Difference Between Demand And Supply**
3. **Explain In Details Determinants Of Demand.**
4. **Explain In Details Determinants Of Supply.**
5. **What Is The Law Of Demand? Explain In Brief.**
6. **What Is The Law Of Supply? Explain In Brief.**
7. **Explain In Brief Price Elasticity, Income Elasticity And Cross Elasticity Of Demand.**

ATMIYA UNIVERSITY

Faculty of Engineering and Technology

Department of Electrical Engineering

UG Semester – IV

Subject Name: - Economics & Business Management

Question Bank

1. **Explain Concept Of Management With Respect To Various Activities And Processes**
2. **Describe Characteristics Of Management.**
3. **What Are The Objectives Of Management To Accomplish Desired Goals?**
4. **Describe Different Types Of Skills Of Management.**
5. **Explain In Brief Levels Of Management**
6. **Explain The Scope Of Management For The Improvement.**
7. **What Are The Roles Of Manager?**
8. **Explain Types Of Managers.**
9. **Describe Maslow's Hierarchy Of Needs Theory**
10. **Describe The Principles Of Scientific Management**
11. **Describe The Administrative Principles Of Management**

ATMIYA UNIVERSITY

Faculty of Engineering and Technology

Department of Electrical Engineering

UG Semester – IV

Subject Name: - Economics & Business Management

Question Bank

1. What Do You Mean By Theory Of Production?
2. Explain With Suitable Example Factors Of Production?
3. Explain Short Run And Long Run Production Functions.
4. Explain Law Of Variable Proportions & Law Of Returns To Scale Cost.
5. Define: 1) Fixed Cost 2) Variable Cost 3) Total Cost 4) Average Cost 5) Marginal Cost 6) Opportunity Cost.
6. Explain With Figure Break Even Analysis In Detail.
7. A Pencil Manufacturing Company Sells A Pencil Box Consisting 10 Pencils At A 75 Rupees At A Premium Price. The Variable Cost Associated With Producing One Pencil Is 0.5 Rs. The Fixed Costs Of Company Is Rs. 500000/-. Calculate Breakeven Point Of The Pencil.
8. Describe Major Functions Of Management.
9. What Is Planning? Explain Features Of Planning.
10. What Is Organizing? Explain Features Of Organizing.
11. What Is Staffing? Explain Features Of Staffing.
12. What Is Directing? Explain Features Of Directing.
13. What Is Controlling? Explain Features Of Controlling.
8. Give Classification Of Organization Types.
9. What Is The Difference Between Formal And Informal Organization?
10. Explain The Functions Of Line Organization And Line And Staff Organization.
11. Explain Matrix And Hybrid Organization.
12. What Is Departmentalization? Explain Types Of Departmentalization
14. Define Marketing And Discuss Marketing Mix In Terms Of 4Ps
15. What Do You Mean By Demand Forecasting? Explain In Brief Consumer Survey Method For Demand Forecasting.
16. What Is Market Segmentation? Explain Types Of Market Segmentation.
17. Explain In Brief Functions Of Financial Manager.
18. Explain Different Sources Of Funds
19. What Is Production Management? Explain Objectives Of Production Management.
20. Explain Features Of Various Plant Layout
21. Explain In Detail Factors Affecting The Plant Location

Atmiya University

22. **What Is Human Resource Management? Explain Objectives Of Manpower Planning.**
23. **What Do You Mean By Economics? Elaborate Difference Between Micro And Macroeconomics**
24. **Explain In Detail Difference Between Demand And Supply**
25. **Explain In Details Determinants Of Demand.**
26. **Explain In Details Determinants Of Supply.**
27. **What Is The Law Of Demand? Explain In Brief.**
28. **What Is The Law Of Supply? Explain In Brief.**
29. **Explain In Brief Price Elasticity, Income Elasticity And Cross Elasticity Of Demand.**
30. **Explain Concept Of Management With Respect To Various Activities And Processes**
31. **Describe Characteristics Of Management.**
32. **What Are The Objectives Of Management To Accomplish Desired Goals?**
33. **Describe Different Types Of Skills Of Management.**
34. **Explain In Brief Levels Of Management**
35. **Explain The Scope Of Management For The Improvement.**
36. **What Are The Roles Of Manager?**
37. **Explain Types Of Managers.**
38. **Describe Maslow's Hierarchy Of Needs Theory**
39. **Describe The Principles Of Scientific Management**
40. **Describe The Administrative Principles Of Management**

Atmiya University

18BTMECC501- PRODUCTION TECHNOLOGY

IMPORTATNT QUESTION

All Units

Unit- 1 Theory of Metal Cutting and thermal aspect in Machining

1. Explain in detail different tool materials used in metal cutting process
2. Determine shear angle in the sketch and also derive its equation .: tan θ = r cos α / (1 - r sin α)
3. The following Equation for tool life is given for a turning operation:
   $V\ T$^0.13 f^0.77d^0.37 = C
   A 60 minute tool life was obtained while cutting at V = 30 m/min, f = 0.3 mm/rev and d = 2.5 mm.
   Determine the change in tool life if cutting speed, feed and depth of cut are increased by 20% individually and also taken together.
4. During an orthogonal machining (turning) operation of c – 40 steel the following data were obtained:

i. Chip thickness = 0.45 mm
ii. Width of cut = 2.5 mm
iii. Feed = 0.25 mm/rev
iv. Tangential cut force = 1130 N
v. Feed Thrust Force = 295 N
vi. Cutting Speed = 2.5 m/s
vii. Rake Angle = 10°

5. Calculate (a) Force of shear at the shear plane (b) kinetic coefficient of friction at the chip tool surface.
6. Explain types of chips that occur in metal cutting. Why a built up edge on a tool is undesirable and also explain the reason behind various chip formation.
7. Explain tool designation with suitable figures and notations of angles.
8. List down the machining processes where “Multi Point Cutting Tool” is used.

9. What does the fourth digit indicate in the tool signature given below? 0-7-6-8-15-16-0.8
10. Define : Relief Angle, Rake Angle and Shear Angle observed during metal Cutting process.
11. Explain with a neat sketch Orthogonal and Oblique cutting process.

Unit-2 Jigs & Fixture

1. What is 3-2-1 Principle? Explain with complete Geometry
2. Define Jig & Fixture
3. Explain Starch Clamp in detail.
4. Explain about Rest Pin and Support pin.
5. What are the different types of Jigs are available? Explain any Two in details.
6. What is 3-2-1 Principle? Explain with complete Geometry
7. Explain following Jigs with neat sketch 1). Plate Jig 2).Channel Jig 3). Diameter Jig 4). Sandwich Jig 6). Pot Jig
8. Enlist Type of Fixture & Explain any two in brief.
9. List the various type of Locating Device
10. What are the essential feature of Milling Fixture
11. Explain Design principal of Jigs & Fixture
12. What is the Different type of jig bushes used?

Unit-3 PRESS TOOLS

1. What are the applications of press work? How does press work differs from machining?
2. How the presses are classified? Sketch and describe any one of it.
3. Explain the following press working operation (i) Blanking (ii) Piercing (iii) Notching (iv) Nibbling (v)Lancing
4. State the advantages of press machine.
5. Define following press working terminology :
   1). Bed 2). Bolster plate 3). Die shoe 4). Die block 5). Punch 6). Stripper 7). Punch holder 8). Pressure plate.
6. Difference between piercing & blanking operation.
7. Write in detail the method of reducing cutting force in press working.
8. Give Differences: Piercing & Blanking.

Atmiya University Rajkot

9. Write in detail the method of reducing cutting force in press working .
10. List the forming operation perform on press. Explain Any Two in Brief with Neat Sketch

Unit-4 Non-Conventional Machining Process

1. Comparison between conventional and non-conventional machining process.
2. Classify various Non-conventional machining processes.
3. Explain the basic principal of EDM process. Also discuss the characteristics of various materials that are used for EDM tool.
4. What is LASER? Explain LBM.
5. Explain Laser Beam Machining process in detail. Describe Ultrasonic Machine (USM) with neat sketch.
6. Describe Water Jet Machining process with the help of neat sketch. State its advantages and application
7. What is LASER? Explain LBM
8. Explain The Advantages of EBM
9. Classify various non-conventional machining process

Unit-5 PLASTIC TECHNOLOGY

1. What is POLYMERIZATION?
2. What is Monomer?
3. Define Homo polymer & copolymer
4. List the Characteristics of polymer
5. List the Characteristics of Thermo plastic polymer & Thermosetting polymer
6. Write short note on Injection moulding process with neat sketch.
7. Explain with neat sketch Blow Moulding Process.
8. What are the advantages, Disadvantages and application of Injection Moulding Process
9. Explain with neat sketch Pressure Forming process with Advantages
10. Explain with neat sketch Vacuum Forming process with Advantages

Atmiya University Rajkot

Department of English

Course: Core 10: Indian Writing in English

Semester – 3

Question Bank

Part A: Short Question

1. Wings of Fire is an autobiography of_____
2. Where is the head office of Sahitya Akademi located?
3. Who is the president of Kendra Sahitya Academy?
4. Who wrote the "Panchatantra"?
5. Who is the author of the book "Hitopadesha"?
6. In which year National Book Trust was founded?
7. Who is the present Director of the National Book Trust?
8. Who was awarded 27th Saraswati Samman?
9. Who has written the Sanskrit book meghdoot?
10. Who was the poet of kadambari?
11. Who wrote the famous novel 'Anandamath'?
12. How many chapters are in Bhagavad Gita?
13. Which book of Salman Rushdie wins the Booker Prize?
14. In which year the Jnanpith Award was first awarded?
15. Who received the first Jnanpith award?
16. For Which book did VS Naipaul got Nobel Prize?
17. What was the original name of renowned Hindi and Urdu writer Munshi Premchand?
18. Which one is the first novel of Chetan Bhagat?
19. Who is the writer of of the book 'Train to Pakistan'?
20. Who is the author of the novel 'The Inheritance of Loss'?
21. Who was the first women to received Jnanpith Award?
22. Who was the writer of the book 'Devdas'?
23. Who is the writer of 'Malgudi Days'?
24. Who was the first Indian to win Man Booker?
25. _____ won the Pulitzer Prize in India.
26. For Which book Rabindra Nath Tagore received the Noble Prize?

Atmiya University Rajkot

27. Who wrote our national anthem ‘jana gana mana’?
28. The jataka stories are related to the previous lives of whom?
29. Who wrote Ramayana?
30. Name the first Indian to win Nobel Prize for literature Name the first Indian to win Nobel Prize for literature
31. What is the meaning of the word Gitanjali?
32. Rabindranath Tagore was awarded with Nobel prize in
33. Who is known as the Bard of Bengal?
34. Who wrote the introduction to Gitanjali?
35. Who was the first non-European to win Nobel Prize for literature?
36. Tagore’s Dak Ghar and Chandalika are included in which of the following genre?
37. Tireless striving stretches its arms towards
38. Who attributed the title Bharat kokila/ the nightingale of India to Sarojini Naidu?
39. Who was the first woman to become the governor of an Indian state?
40. The collection The Golden Threshold was published in
41. Inthe poem "Coromandel Fishers" whom the poet address?
42. “No looser delay, let us hasten away in the track of the seagull’s call”. Here ‘seagull’ is
43. Kamala Das was nominated for Nobel prize in which year?
44. Alphabet of Lust by Kamala Das was a
45. Name the autobiography of Kamala Das
46. . “I was a child, and later they told me I grew…” who are they referred here?
47. Arun Balkrishna Kolatkar wrote both in English and -----
48. Which town is recurrently used in R.K.Narayan’s stories?
49. The Interpreter of Maladies was published in
50. Who translated the works of Karnad in Kannada into English?
51. Where was R K Narayan born?
52. Narayan quit his job as a school teacher because_____
53. Narayan was a simple man in a simple age," what does the narrator mean?
54. Which language is Naamandala written in?
55. Who is the beautiful woman in the colourful sari who enters the temple at the beginning of the play?

Atmiya University Rajkot

56. What does Appanna do when he brings Rani to his house?
57. What does Appanna do when he brings Rani to his house?
58. Why do Kurudavva and Kappanna come to Appanna's house?
59. What does Kuruvadda ask Kappanna to bring her?
60. What happens when Rani gives Appanna the milk with the root paste?
61. Why does Appanna bring a watchdog?
62. What happens to the curry when Rani pours the paste into it?
63. What does Rani do with the curry?
64. Where does Appanna go away from his house?
65. What is the sub-title of the play Nagamandala?
66. What is the sub-title of the play Nagamandala?
67. In the first stanza, at _____, it is both the fasting men and the bakers (or bread vendors) who are eager.
68. At _____, everyone on the street is panting in the sun.
69. At _____, not only are the flower-sellers calling out, but the lutes are playing and the lovers whispering to each other.
70. ____ has written The Kitemaker.

Atmiya University
Rajkot

Part B & C : Descriptive Questions:

1. What poetic devices are used in street cries?
2. What is the theme of poem street cries?
3. What is the explanation of street cries by Sarojini Naidu?
4. Why is the earth faltering in the poem street cries?
5. What sound device is used in the poem?
6. What poetic device is used in poem?
7. What is the historical background of Indian English writing?
8. What are the major themes of Indian writing in English?
9. What are the main characteristics of Indian writing in English?
10. What are the major contributions of Indian writers in English literature?
11. Who is the father of Indian writing in English?- Detailed Note
12. Who are the three pillars of Indian English literature?
13. Write a note on- Saroini Naidu
14. Write a note on Raja Rao
15. Write a note on Mulk Raj Anand
16. Note on R K Narayan
17. Contribution of Major writers in IWE
18. Theme of partition
19. What is the importance of partition in history?
20. Who are the minor writers in English?
21. What is the theme of The Bachelor of Arts novel?
22. Coming of Age Theme in the novel
23. Who is the real bachelor of arts according to the title of the novel? Why?
24. What is the moral vision in The Bachelor of Arts by RK Narayan?
25. Who are the characters of the novel Bachelor of Arts?
26. What is the author's main theme?
27. Why is it called a Bachelor of Arts?
28. Who is the father of the Arts?
29. What is the major themes in R. K. Narayan's novels?
30. What is moral in arts?
31. What type of character is the bachelor in the storyteller?

Atmiya University
Rajkot

32. What is the setting of the story?
33. What is the message of the story?
34. What is main idea in literature?
35. What is the significance of the title Nagamandala answer?
36. What are major themes of Nagamandala?
37. What is the theme of myth in Nagamandala?
38. What is the representation of Rani in Nagamandala?
39. Why does Rani put her hand in snake burrow?
40. Who is the central character in Nagamandala?
41. Why does snake remove his skin?
42. Why does Naga stop visiting Rani for 15 days?
43. Why does the poet call the snake beautiful?
44. How does Naga fall in love with Rani?
45. What is the character of Appanna?
46. How many endings are there in Nagamandala? Explain all.
47. What are the elements of Nagamandala?
48. Character sketch of Mehmood
49. The history of IWE'
50. The end of the story Kite maker.
51. The symbolic representation in the story The Kite Maker
52. Character sketch of a mother in the poem 'Night of the Scorpion'
53. What is the story of the poem 'Night of the Scorpion'?
54. Science and religion in the poem
55. End of the poem
56. Message of the poem
57. Your views about the poem
58. Role of mother in your life
59. Message from the poem Street Cries
60. Three layers -Three meaning in The Street Cries

Atmiya University
Rajkot

Department of English

Course: Core 1: Introduction to Literary Studies

Semester – 1

Question Bank

1. Definition of Literature
2. Literature means___
3. Write definition of Literature according to Marriam Webster
4. Which period of literature came first?
5. The period of maturation, intellectual growth, and social graces during the Renaissance is called ____
6. _____ literary sub-periods does NOT fall under the Neoclassical Period?
7. In which city was Milton?
8. What was the date of birth of John Milton?
9. The first, and perhaps most fundamental, step in interpreting any document is determining its_____
10. The term "genre" refers to . . .
11. **What literary genre is most associated with the oral tradition?**
12. **What is a name that some cultures used for the trained storytellers who memorized and repeated stories in the oral tradition?**
13. **Which poetry tells a story?**
14. **The oldest form of poetry is____**
15. **Narrative poetry is similar to_____**
16. **Maor form of Narrative poetry**
17. When and where a story takes place is the _____ of a story.
18. A perspective from which a story is told in 1st or 3rd person is called the _____.
19. The main idea, lesson or message of a story.
20. Autobiography, biography, and informational books are _____
21. _____is the time and place of the story.
22. Fiction writing is_____
23. A story told from the point of view of a horse_____

Atmiya University Rajkot

24. A fiction story includes characters, setting, theme, plot, and conflict. True or False?
25. Autobiography of Dr. Martin Luther King, Jr. Category?
26. story that is not true or is made up is known as _____
27. ovels, Journals, Novellas, and Short Stories are all Types of Fiction. True or False?
28. What is the nature of a fictional story?
29. What is the basis of nonfiction stories?
30. What is the only structure on earth that is clearly seen from the satellite?
31. What is the basis of nonfiction stories?

Part B & C : Descriptive Answers

1. What is literature? Write in detail.
2. Write a note on one element of literature- Theme.
3. Write a note on Oral and written literature.
4. What is prose and poetry? Describe with examples.
5. Describe the short story form.
6. Explain the important dramatic terms.
7. Which are the characteristics of Biography?
8. How can self-help book be very useful to the readers?
9. Ancient literature and its beginning- A brief note.
10. Write a note on Elizabethan Prose and poetry.
11. Write about plot and character as the important elements of literature.
12.
13. What is the role of literature in the society?
14. Write a detailed note on Fiction.
15. Which are the main differences between fiction and non-fiction? Elaborate.
16. Which are the main types of novel? Describe.
17. Origin and history of Drama- Write a note.
18. What is an autobiography? Which are the characteristics?
19. How do you see the growth of literature over the period of time?

Atmiya University
Rajkot

20. Who are the major contributors in the age of Romanticism, Victorian age and Modern time?

Department of English

Course: Core 10: Indian Writing in English – I

Semester – 5

Question Bank

Part A: Short Question

1. Wings of Fire is an autobiography of_____
2. Where is the head office of Sahitya Akademi located?
3. Who is the president of Kendra Sahitya Academy?
4. Who wrote the "Panchatantra"?
5. Who is the author of the book "Hitopadesha"?
6. In which year National Book Trust was founded?
7. Who is the present Director of the National Book Trust?
8. Who was awarded 27th Saraswati Samman?
9. Who has written the Sanskrit book meghdoot?
10. Who was the poet of kadambari?
11. Who wrote the famous novel 'Anandamath'?
12. How many chapters are in Bhagavad Gita?
13. Which book of Salman Rushdie wins the Booker Prize?
14. In which year the Jnanpith Award was first awarded?
15. Who received the first Jnanpith award?
16. For Which book did VS Naipaul got Nobel Prize?
17. What was the original name of renowned Hindi and Urdu writer Munshi Premchand?
18. Which one is the first novel of Chetan Bhagat?
19. Who is the writer of of the book 'Train to Pakistan'?
20. Who is the author of the novel 'The Inheritance of Loss'?
21. Who was the first women to received Jnanpith Award?
22. Who was the writer of the book 'Devdas'?

Atmiya University Rajkot

23. Who is the writer of ‘Malgudi Days’?
24. Who was the first Indian to win Man Booker?
25. _____ won the Pulitzer Prize in India.
26. For Which book Rabindra Nath Tagore received the Noble Prize?
27. Who wrote our national anthem ‘jana gana mana’?
28. The jataka stories are related to the previous lives of whom?
29. Who wrote Ramayana?
30. Name the first Indian to win Nobel Prize for literature Name the first Indian to win Nobel Prize for literature
31. What is the meaning of the word Gitanjali?
32. Rabindranath Tagore was awarded with Nobel prize in
33. Who is known as the Bard of Bengal?
34. Who wrote the introduction to Gitanjali?
35. Who was the first non-European to win Nobel Prize for literature?
36. Tagore’s Dak Ghar and Chandalika are included in which of the following genre?
37. Tireless striving stretches its arms towards
38. Who attributed the title Bharat kokila/ the nightingale of India to Sarojini Naidu?
39. Who was the first woman to become the governor of an Indian state?
40. The collection The Golden Threshold was published in
41. Inthe poem "Coromandel Fishers" whom the poet address?
42. “No looser delay, let us hasten away in the track of the seagull’s call”. Here ‘seagull’ is
43. Kamala Das was nominated for Nobel prize in which year?
44. Alphabet of Lust by Kamala Das was a
45. Name the autobiography of Kamala Das
46. . “I was a child, and later they told me I grew…” who are they referred here?
47. Arun Balkrishna Kolatkar wrote both in English and -----
48. Which town is recurrently used in R.K.Narayan’s stories?
49. The Interpreter of Maladies was published in
50. Who translated the works of Karnad in Kannada into English?
51. Where was R K Narayan born?
52. Narayan quit his job as a school teacher because_____

Atmiya University Rajkot

53. Narayan was a simple man in a simple age," what does the narrator mean?
54. Which language is Naamandala written in?
55. Who is the beautiful woman in the colourful sari who enters the temple at the beginning of the play?
56. What does Appanna do when he brings Rani to his house?
57. What does Appanna do when he brings Rani to his house?
58. Why do Kurudavva and Kappanna come to Appanna's house?
59. What does Kuruvadda ask Kappanna to bring her?
60. What happens when Rani gives Appanna the milk with the root paste?
61. Why does Appanna bring a watchdog?
62. What happens to the curry when Rani pours the paste into it?
63. What does Rani do with the curry?
64. Where does Appanna go away from his house?
65. What is the sub-title of the play Nagamandala?
66. What is the sub-title of the play Nagamandala?
67. In the first stanza, at _____, it is both the fasting men and the bakers (or bread vendors) who are eager.
68. At _____, everyone on the street is panting in the sun.
69. At _____, not only are the flower-sellers calling out, but the lutes are playing and the lovers whispering to each other.
70. ____ has written The Kitemaker.

Atmiya University
Rajkot

ATMIYA UNIVERSITY

Faculty of Engineering

Civil Engineering (Transportation Engineering)

21MCITCC301– Signal Designing & Roadway Capacity (Self-Study)

QUESTION BANK SDRC for Unit 3,4 and 5

Unit- III: Design of fixed time signal

- What is traffic signal? Give advantages and disadvantages of signal
- Define: Queue Length, Saturation Flow & Conflict Point.
- Give the basic requirements of traffic signals.
- Explain phasing of traffic signal with sketch.
- Define following terms: cycle, cycle length, and interval.
- Discuss basic requirements of signals.
- Give the general steps for design of fixed time signal for a two phase installation.
- Explain webster's method for signal design.
- Explain IRC method for fixed time signal design.

Unit- IV: Traffic flow estimation

- Discuss saturation flow.
- Explain time mean speed as per INDO-HCM.
- Draw the sketch of four leg two-way intersection showing all its conflict point.
- Explain Static and dynamic PCU.
- Types of Flow.
- Relation between Speed-density-flow of traffic.

- At a right angled intersection of two roads, Road I has four lanes with a total width of 12m and Road 2 has two lanes with a total width of 6.6m. The volume of traffic approaching the intersection during the design hour are 900 and 743 PCU/hr on the two approaches of Road 1 and 278 and 180 PCU/hr on the two approaches of Road 2. Design signal timings as per IRC guidelines.

- The speeds of 25 cars were observed. 10 cars were noted to travel at 35kph, 8 cars at 40 kph, 2 cars at 50kph, and 5 cars at 45kph. Assuming that each car was traveling at constant speed, determine the time mean speed.

- The speeds of 25 cars were observed. 10 cars were noted to travel at 35kph, 8 cars at 40 kph, 2 cars at 50kph, and 5 cars at 45kph. Assuming that each car was traveling at constant speed, determine the space mean speed.

- Suppose a 15 minute count of vehicles bound for Manila was conducted at a particular location on Quezon Avenue. A summary is shown in the table below. TYPE 15-MINUTE COUNT Car/van 420, Jeepney 300, Bus 16, Truck 28, determine the flow rate or volume method.

Atmiya University Rajkot

Example 3

An intersection approach controlled by a fixed-time signal was observed for 15 saturated intervals, each of 0.1 minute, providing the following results.

Time (min) (intervals)	0	0.1	0.2	0.3	0.4	0.5
Number of saturated intervals	15	15	15	15	15	
Number of vehicles crossing stop bar	22	35	30	28	26	
Discharge per 0.1 min	1.46	2.33	2.00	1.86	1.73	

At the end of the amber period, there is an interval of less than 0.1 minute. The length of this period and the number of vehicles crossing the stop bar are noted. These intervals are referred to as the *last saturated intervals*. The observer noted the following:

Total duration of all the last saturated intervals = 50 sec

Total number of vehicles crossing stop line = 13

Discharge per 0.1 min during last saturated interval $= \frac{13}{50/60} \times \frac{1}{10} = 1.56$ vehicles

Estimate the lost time.

Unit- V: Level of Service

Explain methodology for estimation of capacity and LOS for signalized intersection.
What is Level of Service.
what are the types of LOS and its significance in detail

1.

Atmiya University Rajkot

ATMIYA UNIVERSITY

Faculty of Engineering

Civil Engineering (Transportation Engineering)

21MCITCC301– Signal Designing & Roadway Capacity (Self-Study)

QUESTION BANK SDRC for Unit 1 and 2

1. What use of optical unit.
2. Why be provide redirection cover glass and lenses.
3. What are the types of signal face.
4. Define controller and its types.
5. What is the types of signals.
6. What are traffic signals.
7. Advantage & disadvantage of traffic signals.
8. Defined queue length, saturation flow, continuous line
9. Define following term cycle , cycle length , interval.
10. Give basic requirement of traffic signals.
11. Discuss saturation flow in detailed.
12. Explain face of traffic signals with neat sketch.
13. Explain classic function of signals.
14. Enlist method of fixed time signal design.
15. Given the basic requirement of traffic signals.
16. Determined warrants for minimum pedestrian volume.
17. Determined warrants for intermittent continuous traffic.
18. The clearance time for amber is usually . (mcq)
19. A complete signal time cycle constitutes.(mcq)
20. Flashing yellow beam are sometimes employed as .(mcq)
21. The signal lense are normally of size of .(mcq)
22. A signal cycle is one complete rotation through all of the indication provided is called. (mcq)
23. The first stage in the funcation of traffic engineering department. (mcq)

One liner Questions:

1. What is the dictionary definition of Creative Writing?
2. Make a list of Types of writing styles.
3. What is narrative writing?
4. What is descriptive writing?
5. What is persuasive writing?
6. What is expository writing?
7. Which type of writing refers to storytelling in its base form?
8. Which type of writing is more focused on details?
9. Which style of writing is used for convincing your point?
10. Which style of writing is more focused on teaching new things?
11. Which genre is used to tell a complete story via illustrations?
12. Which form is used to share the writer's life experiences in service of a larger theme or idea?
13. Which form often follows a three-act structure to tell a story?
14. _____ is any work of narrative fiction from 1,000 to 10,000 words. 15. Make a list of essential elements of Creative Writing.
16. What is the purpose of conflict?
17. _____ defines your characters' voices, establishes their speech patterns, and reveals key information without being needlessly expository.
18. What is Pacing?
19. _____ is the sequence of events that creates a story.
20. What is 'Point of View'?
21. _____ are the building blocks of stories.
22. What is the Setting in literature?
23. _____is an author's unique way of communicating with words.
24. _____ is a broad conceptual philosophy an author wishes to convey through their work.
25. Write about any one benefit of Creative Writing?

Brief Questions:

1. Explain Descriptive and Persuasive styles of writing.
2. Explain Narrative and Expository styles of writing.
3. Explain any three benefits of creative writing.
4. Explain any three forms of creative writing.
5. Explain any three elements of creative writing.
6. Explain 'Creativity is key' in your words.

Descriptive Questions:

1. Write a detailed note on the Essential Elements of Creative Writing.
2. Write a detailed note on Types of Writing Styles.
3. What makes a good piece of Creative Writing?

Atmiya University Rajkot

4. Write a detailed note on Writing Styles

Atmiya University
Rajkot

ATMIYA UNIVERSITY
FACULTY OF ENGINEERING & TECHNOLOGY
DEPARTMENT OF MECHANICAL ENGINEERING
B.TECH. 7TH SEM.
OPERATION RESEARCH
QUESTION BANK

Unit-1: Introduction, Linear programming

1. Definitions and Characteristics (Features) of operations research
2. Phases, Scope (Applications) and Limitations of OR
3. Assumptions in Linear Programming Problem
4. Applications of Linear Programming
5. What are the advantages of using linear programming?
6. Write down limitations of linear programming
7. A firm produces three products. These products are processed on three different machines. The time required to manufacture one unit of each of the three products and the daily capacity of the three machines are given in the table below:

Machine	Time per unit (Minutes)			Machine Capacity (minutes/day)
	Product 1	Product 2	Product 3	
M_1	2	3	2	440
M_2	4	-	3	470
M_3	2	5	-	430

It is required to determine the daily number of units to be manufactured for each product. The profit per unit for product 1, 2 and 3 is Rs. 4, Rs.3 and Rs.6 respectively. It is assumed that all the amounts produced are consumed in the market. Formulate the mathematical (L.P.) model that will maximise the daily profit.

8. A company has two grades of inspectors, I and II to undertake quality control inspection. At least 1, 500 pieces must be inspected in an 8-hour day. Grade I inspector can check 20 pieces in an hour with an accuracy of 96%. Grade II inspector checks 14 pieces an hour with an accuracy of 92%. Wages of grade I inspector are Rs. 5 per hour while those of grade II inspector are Rs. 4 per hour. Any error made by an inspector costs Rs. 3 to the company. If there are, in all, 10 grade I inspectors and 15 grade II inspectors in the company, find the optimal assignment of inspectors that minimise the daily inspection cost.
9. Vitamins B1 and B2 are found in two foods F1 and F2. 1 unit of F1 contains 3 units of B1 and 4 units of B2. 1 unit of F2 contains 5 units of B1 and 3 units of B2 respectively. Minimum daily prescribed consumption of B1 & B2 is 50 and 60 units respectively. Cost per unit of F1 & F2 is Rs. 6 & Rs. 3 respectively. Formulate as LPP.
10. A company manufactures two products A and B. Both products are processed on two machines M1 & M2. Profit per unit for A is Rs. 100 and for B is Rs. 80. Find out the monthly production of A and B to maximise profit by graphical method.

	M_1	M_2
A B	6 Hrs/Unit 4 Hrs/Unit	2 Hrs/Unit 4 Hrs/Unit
Availability	7200 Hrs/month	4000 Hrs/month

ATMIYA UNIVERSITY
FACULTY OF ENGINEERING & TECHNOLOGY
DEPARTMENT OF MECHANICAL ENGINEERING
B.TECH. 7TH SEM.
OPERATION RESEARCH
QUESTION BANK

11. A firm is engaged in animal breeding. The animals are to be given nutrition supplements every day. There are two products A and B which contain the three required nutrients.

Nutrients	Quantity/unit		Minimum Requirement
	A	B	
1	72	12	216
2	6	24	72
3	40	20	200

Product cost per unit is: A: Rs. 40; B: Rs. 80. Find out quantity of product A & B to be given to provide minimum nutritional requirement.

12. Find optimal solution by graphical method.
Max. $Z = 160\ X1 + 240\ X2$
Subject to constraints
$X1 \geq 4$
$X2 \geq 6$
$X1 + X2 \leq 18$
$60\ X1 + 60\ X2 \leq 720$
$X1, X2 \geq 0$

13. Find optimal solution by graphical method.
Min. $Z = 50\ X1 + 20\ X2$
Subject to constraints
$X1 + X2 \leq 600$
$X1 + X2 \geq 300$
$6\ X1 + 2\ X2 \geq 1200$
$X1, X2 \geq 0$

14. Find optimal solution by simplex method.
Max. $Z = 3\ X1 + 4\ X2$
Subject to constraints
$X1 + X2 \leq 450$
$2X1 + X2 \leq 600$
$X1, X2 \geq 0$

15. Find optimal solution by Big M method.
Min. $Z = 12\ X1 + 20\ X2$
Subject to constraints
$6\ X1 + 8\ X2 \geq 100$
$7\ X1 + 12\ X2 \geq 120$
$X1, X2 \geq 0$

ATMIYA UNIVERSITY
FACULTY OF ENGINEERING & TECHNOLOGY
DEPARTMENT OF MECHANICAL ENGINEERING
B.TECH. 7TH SEM.
OPERATION RESEARCH
QUESTION BANK

Unit-2: Transportation and Assignment

1. Name any three methods to find initial basic feasible solution in transportation model
2. Which one is the most efficient method to solve assignment problem?
3. Formulate the transportation model into linear programming.
4. Explain MODI method with the help of MODI algorithm
5. Formulate the assignment model into linear programming.
6. How to resolve degeneracy in transportation problems?
7. How to solve redundancy in transportation problems?
8. Obtain the initial BFS of the following TP using N-W corner rule, LCM and VAM

		Destination			
		D_1	D_2	D_3	Capacity
Origin	O_1	5	4	3	100
	O_2	8	4	3	300
	O_3	9	7	5	300
	Requirement	300	200	200	

9. Millennium Herbal Company ships truckloads of grain from three silos to four mills . The supply (in truckloads) and the demand (also in truckloads) together with the unit transportation costs per truckload on the different routes are summarized in the transportation model in table.1. Find the minimum-cost for shipping schedule between the silos and the mills using VAM and MODI method.

	D	E	F	G	Available
A	11	13	17	14	250
B	16	18	14	10	300
C	21	24	13	10	400
Requairement	200	225	275	250	

Table 1. Transportation model of example (Millennium Herbal Company Transportation)

10. Find the minimum transportation cost for the given problem using VAM and Stepping stone method

ATMIYA UNIVERSITY
FACULTY OF ENGINEERING & TECHNOLOGY
DEPARTMENT OF MECHANICAL ENGINEERING
B.TECH. 7TH SEM.
OPERATION RESEARCH
QUESTION BANK

Project	A	B	C	Availability
1	2	7	4	50
2	3	3	1	80
3	5	4	7	70
4	1	6	2	140
Demand	70	90	180	

11. There are 3 jobs A, B, and C and three machines X, Y, and Z. All the jobs can be processed on all machines. The time required for processing job on a machine is given below in the form of matrix. Make allocation to minimize the total processing time.

Machines (time in hours)

Jobs	*X*	*Y*	*Z*
A	11	16	21
B	20	13	17
C	13	15	12

12. A company has five jobs V, W, X, Y and Z and five machines A, B, C, D and E. The given matrix shows the return in Rs. of assigning a job to a machine. Assign the jobs to machines so as to maximize the total returns.

Machines.
Returns in Rs.

Jobs	*A*	*B*	*C*	*D*	*E*
V	5	11	10	12	4
W	2	4	6	3	5
X	3	12	5	14	6
Y	6	14	4	11	7
Z	7	9	8	12	5

13. Five jobs are to be assigned to 5 machines to minimize the total time required to process the jobs on machines. The times in hours for processing each job on each machine are given in the matrix below. By using assignment algorithm make the assignment for minimizing the time of processing. Also find the alternate (multiple) solution if it's present.

ATMIYA UNIVERSITY
FACULTY OF ENGINEERING & TECHNOLOGY
DEPARTMENT OF MECHANICAL ENGINEERING
B.TECH. 7TH SEM.
OPERATION RESEARCH
QUESTION BANK

Machines (time in hours)

Jobs	*V*	*W*	*X*	*Y*	*Z*
A	2	4	3	5	4
B	7	4	6	8	4
C	2	9	8	10	4
D	8	6	12	7	4
E	2	8	5	8	8

14. A manager has 4 jobs on hand to be assigned to 3 of his clerical staff. Clerical staff differs in efficiency. The efficiency is a measure of time taken by them to do various jobs. The manager wants to assign the duty to his staff, so that the total time taken by the staff should be minimum. The matrix given below shows the time taken by each person to do a particular job. Help the manager in assigning the jobs to the personnel.

Jobs.	*Men (time taken to do job in hours).*		
	X	Y	Z
A	10	27	16
B	14	28	7
C	36	21	16
D	19	31	21

15. A salesman stationed at city A has to decide his tour plan to visit cities B, C, D, E and back to city A I the order of his choice so that total distance traveled is minimum. No sub touring is permitted. He cannot travel from city A to city A itself. The distance between cities in Kilometers is given below:

Cities	*A*	*B*	*C*	*D*	*E*
A	M	16	18	13	20
B	21	M	16	27	14
C	12	14	M	15	21
D	11	18	19	M	21
E	16	14	17	12	M

Unit-3: Project Management

1. Write down the advantages and drawbacks of CPM
2. Write any two management applications of network analysis?
3. What are the different phases of project management?

ATMIYA UNIVERSITY
FACULTY OF ENGINEERING & TECHNOLOGY
DEPARTMENT OF MECHANICAL ENGINEERING
B.TECH. 7TH SEM.
OPERATION RESEARCH
QUESTION BANK

4. Network components and their relationships
5. Rules for AOA network construction
6. When are dummies added in the network
7. Explain optimistic time, pessimistic time and most likely time.
8. Explain float (slack) of an activity and event.
9. What is critical path in network analysis?
10. Write the distinction between PERT and CPM
11. What is project crashing?
12. Explain Time Cost Trade Off procedure.
13. How is project completion time estimated in PERT using probability?
14. Determine the critical path for given activities and find out time for completion of the project using CPM.

Activity	Duration	Activity	Duration	Activity	Duration
1-2	5	3-5	1	7-8	1
1-3	6	4-6	1	7-9	4
2-6	8	5-7	2	2-9	9
3-4	1	6-8	3	8-9	3

15. For the given activities determine critical path using PERT and calculate variance and standard deviation for each activity and for project as well

Activity	To	Tm	Tp	Activity	To	Tm	Tp
1-2	6	9	12	3-5	1	1.5	5
1-3	3	4	11	2-6	5	6	7
2-4	2	5	14	4-6	7	8	15
3-4	4	6	8	5-6	1	2	3

Unit-4: Replacement and game theory

1. Explain the given terminologies of game theory.
   Players, Strategy, Payoff Matrix, Maximin, Minimax, Saddle Point, Game Value, Two Person Zero Sum Game
2. Reduce the given matrix by dominance rule

4	6	5	10	6
7	8	5	9	10
8	9	11	10	9
6	4	10	6	4

ATMIYA UNIVERSITY
FACULTY OF ENGINEERING & TECHNOLOGY
DEPARTMENT OF MECHANICAL ENGINEERING
B.TECH. 7TH SEM.
OPERATION RESEARCH
QUESTION BANK

3. Reduce the given matrix by dominance rule

5	-3	3	4
-4	5	4	5
4	-4	-3	3

4. Solve the problem of game theory using graphical method

1	3	-1
2	-2	3

5. Solve the following game by

   a. Min-Max Principle Method. b. Dominance- Method.

	Player B			
	B1	B2	B3	B4
A1	**1**	**7**	**3**	**4**
A2	**5**	**6**	**4**	**5**
A3	**7**	**2**	**0**	**3**

6. Solve the following game.

	I	II	III	IV
I	3	2	4	0
II	3	4	2	4
III	4	2	4	0
IV	0	4	0	8

7. Solve the Game whose pay-off matrix is

	B1	B2	B3	B4
A1	3	2	4	0
A2	3	4	2	4
A3	4	2	4	0
A4	0	4	0	8

8. Solve the game whose pay off matrix is:

	B1	B2	B3	B4	B5	B6
A1	1	3	-1	4	2	-5
A2	-3	5	6	1	2	0

9. Explain replacement models

ATMIYA UNIVERSITY
FACULTY OF ENGINEERING & TECHNOLOGY
DEPARTMENT OF MECHANICAL ENGINEERING
B.TECH. 7TH SEM.
OPERATION RESEARCH
QUESTION BANK

10. The cost of machine is Rs 10,500 and its scrap value is Rs 500. The maintenance cost found from experience are as follows:

Year	1	2	3	4	5	6	7	8
Maintenance Cost (Rs)	300	500	700	1000	1400	1900	2400	3000

When should machine be replaced?

11. The purchase price of a machine is Rs 9000 and it's installation charges amount Rs 1000. The maintenance cost and resale value per year of machine is given below:

Year	1	2	3	4	5	6	7	8
Maintenance cost	1000	1500	2000	2500	3000	4000	5100	7000
Resale value	6000	3500	1600	800	700	500	400	400

When should machine be replaced?

12. The purchase price of a machine is Rs 9000 and its installation cost is Rs 1000. The maintenance cost and resale value per year of machine is beven below.

Year	1	2	3	4	5	6	7	8
Maintenance cost	100	1500	2000	2500	3000	4000	5100	7000
Resale value	6000	3500	1600	800	700	500	400	400

When should machine be replaced?

13. Purchase price of a machine is Rs 3000 and its running cost is Rs 500 for each of the first five years and increases by Rs 100 every subsequent year.If the discount rate is 10% per year, when should the machine be replaced? Assume that there is no salvage value.
14. The cost of the lamp is RS 1.75 and individual replacement cost is Rs 0.5. Then which week this item should be replaced in group. Assume that the total number of lamps are 1000.

Age in weeks	1	2	3	4	5	6	7
% failure	10	5	5	10	20	20	30

Unit-5: Queuing theory and inventory model

1. What are the objectives of inventory management?
2. Give classification of inventory

ATMIYA UNIVERSITY
FACULTY OF ENGINEERING & TECHNOLOGY
DEPARTMENT OF MECHANICAL ENGINEERING
B.TECH. 7TH SEM.
OPERATION RESEARCH
QUESTION BANK

3. Describe costs involved in inventory
4. Explain in brief economic order quantity
5. Give classification of inventory models
6. A storekeeper has 500 units of refrigerators to be supplied per year to his customers. The demand is fixed. The inventory holding cost is Rs 200 per unit and ordering cost is Rs 80. Determine (1) Optimum lot size, (2) optimal total variable cost, (3) Optimal period to be placed and (4) number of total orders to be placed in a year.
7. A shopkeeper has to supply 20000 units of a product every year. Product available to him at the rate of Rs 50. The inventory holding cost per unit per year is 7.5% of the cost of the product. If the shopkeeper has to pay Rs 75, as cost of order to be placed, then find: (1) Optimum lot size, (2) optimal total variable cost, (3) Optimal period to be placed and (4) Profit of the year if the each unit is sold at Rs 55.
8. For any product if the demand per year ius 2500 units having cost price of Rs 36, ordering cost is Rs 25 per order and other inventory holding cost which includes insurance rate, storage rate, interest rate and obsolescence rate as 3%, 2%, 10% and 5% per year respectively. Find EOQ and optimal variable cost.
9. A company has a demand of 12000 units per year for an item and it can produce 2000 such item per month. The cost of one setup is Rs 400 and the holding cost per unit per month is Rs 0.15. The cost of unit is Rs 4. Find (1) The optimum lot size, (2) Total cost per year, (3) Maximum inventory level, (4) Manufacturing time and (5) Total time.
10. Following are the details available information for a company regarding a particular product:
    a. Annual demand=15000 units; Ordering cost=Rs 10 per order;
    b. Cost = Rs 20 per product; Inventory holding cost=20% of cost per year
    c. Shortage cost=25% of value of inventory
    d. Calculate:
    e. Economic order quantity, (2) Allowable shortage of quantity, (3) Maximum inventory level and (4) Total variable cost
11. A bus repairing garage is repairing at the rate of 20 buses per day. He has to pay a penalty of Rs 100 per bus per day for not fulfilling the demand. Carrying cost of bus is Rs 1200 per month. What should be the inventory level at the beginning of each month? Also, calculate minimum total variable cost.

Course Code	Course Title
21BTCECC302/21BTCSCC302	**Data structure**

1. Define data structure. Briefly explain linear and non lineardata structures with theirapplications.
2. Define Time complexity and Space complexity. Calculatetime complexity for given expression.

```
for (k=0; k<n; k++)
{
        rows[k] = 0;
        for(j=0; j<n; j++)
        {
                rows[k] = rows[k] + matrix[k][j];
        total = total + matrix[k][j];
        }
}
```

3. Define sparse matrix. Briefly explain representation of sparsematrix with the help ofarray.
4. Give the difference between list andarray.
5. What are the applications of thestack?
6. What is Stack? List out different operation of it and write algorithm for any twooperation.
7. Convert following expression into postfixnotation.
    1. A + (B - C) * D(Ans-ABC-D*+)
    2. A ^ B * C / D (Ans- A B ^ C * D/)

Atmiya University

3. (A + B) / C * D ^ E (Ans-A B + C / D E ^*)
4. A + B – C * D * E $ F $ G (Ans- A B – C D * E F G $$ *+)
5. A+(B*C-(D/E^F)*G) (Ans- A B C * D E F ^ / G * -+)

Atmiya University

Department of Computer Engineering

6. A$B-C*D+E$F/G (Ans- A B $ C D * - E F $ G /+)

8. Convert following infix expressions to the postfix expressions.Shows stacktrace.
   1. A/B$C+D*E/F-G+H (Ans- A B C $ / D E * F / + G - H+)
   2. (A+B)*D+E/(F+G*D)+C (Ans-A B + D * E F G D * + / + C+)

9. Evaluate the following postfix expressionusingstack: 1. 9 3 4 * 8 + 4 / -(Ans=4)
   2. 5 6 2 + * 1 2 4 / - +(Ans=40.5)
   3. 5 4 6 + * 4 9 3 / +*(Ans=350)
   4. 3 5 * 6 2 /+.(Ans=18)
   5. AB+CD/*GH*+ ((where A=2,B=4,C=6,D=3,G=8,H=7)(Ans=68)

10. What is the advantage of postfix expression over infix expression? Write an algorithm of postfix expressionevaluation.
11. Write an algorithm to convert infix to postfix expression and explain it withexample.
12. What is prefix notation? Translate the following string into polish(prefix) notation and trace the content ofstack
    1. A - (B / C + (D % E * F) / G) * H (Ans= A * +/ B C / %D * E F GH)
    2. (A + B) * C – D ^ E ^ (F * G)(Ans=-*+ABC^D^E*FG)
13. Write an algorithm to convert infix to prefix expression and explain it withexample.
14. What is Tower of Hanoi? Explain it withn=3.
15. What is a Queue? Write down drawback of simplequeue.
16. Write an algorithm to perform various operations (insert, delete and display) for simplequeue.

17. Differentiate between stack &queue.

Atmiya University

18. Write differences between simple queue and circularqueue.
19. Write an algorithm for insert and delete operations for circularqueue.
20. Explain priority queue.
21. Perform following operations in a circular queue of length 4 and give the Front, Rear and Size of the queue after eachoperation.
    a. Insert A,B
    b. InsertC
    c. Delete
    d. InsertD
    e. InsertE
    f. InsertF
    g. Delete
22. Describe: (1) Recursion (2) Priority Queue (3) Tower ofHanoi
23. Explain Double endedqueue.
24. Write an algorithm for Double Ended Queue of insertion anddeletion anelement.
25. Consider a dequeue given below which has LEFT=1,RIGHT=5

    _ A B C D E _ _ _ _ .

    Now perform the following operations on the de-queue

    Add F on theleft.

    Add G on theright.

    Add H on theright.

    Delete two alphabets fromleft

    Add I on theright
26. Differentiate peep() and pop() functions respect to stack
27. Write an algorithm to count total number of nodes in SLL.

28. Write following 'C' functions for **singly** linked list.
    - Insert an element after a given node.
    - Delete a given node.
29. Write following algorithms for circular linked list.
    - Inserting an element at first
    - Deleting an element at last
30. Write following algorithm for circular linked list:
    - Inserting an element at the end
31. Write following 'C' functions for **doubly** linked list.
    - Insert a node at the end.
    - Delete a node from the beginning.
32. Write an algorithm to delete a specific node from **doubly** linked list.
33. Write 'C' functions to implement DELETE_FIRST_NODE and TRAVERSE operations in doubly linked list.
34. What is circular link list. Write an algorithm to insert an element at first and insert and element at last.
35. Write a following algorithm for double link list.Insert an element at the end
36. Write down advantages of linked list over array.
    - Define:
    - Graph
    - Tree
    - Cycle
    - Height of a tree.
    - Multigraph
    - Complete binary tree
    - Weighted Graph

37. Write recursive 'C' functions for (1) in-order (2) pre-order and (3) post-order traversals of binary search tree.
38. Generate a binary search tree for following numbers and perform in-order, pre-order and post-order traversals:
    50, 40, 80, 20, 0, 30, 10, 90, 60, 70
39. Explain Deletion in Binary Search Tree.
40. Construct a binary tree from the traversals given below: Inorder: 1, 10, 11, 12, 13, 14, 15, 17, 18, 21
Postorder: 1, 11, 12, 10, 14, 18, 21, 17, 15, 13
41. Construct a binary tree from the traversals given below: Inorder: 1 3 4 6 7 8 10 13 14
Preorder: 8 3 1 6 4 7 10 14 13
42. Mention the properties of B-Tree. Insert the following elements in a B-Tree of order 5.
    60, 30, 10, 20, 50, 40, 70, 80, 15, 90, 100
43. Insert the following elements in a 2-3 Tree. a, g, f, b, k, c, h, n, j
44. Explain AVL tree with example . 10,20,30,40,50,60,70,80
45. Construct an AVL tree for this data.
    150,155,160,115,110,140,120,145,130,147,170,180
46. Generate a binary search tree for following numbers and perform in-order and post-order and pre-order traversals: 50, 40, 80, 20, 0, 30, 10, 90, 60, 70
47. What is a minimum spanning tree? Explain Prim's algorithm for finding a minimum spanning tree.

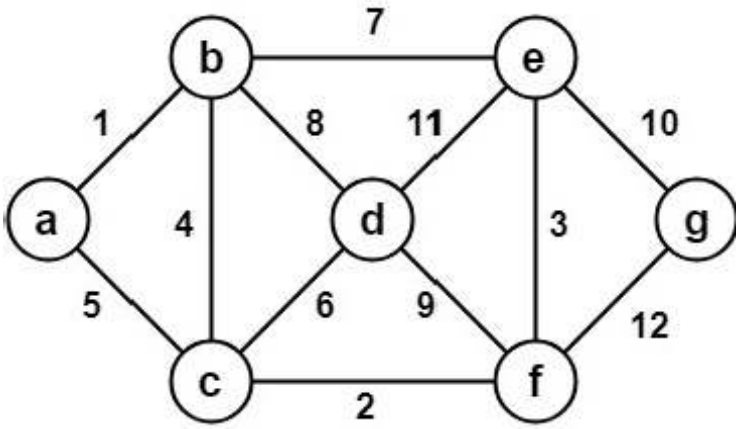

48. What is a minimum spanning tree? Explain Kruskal's algorithm for finding a minimum spanning tree.

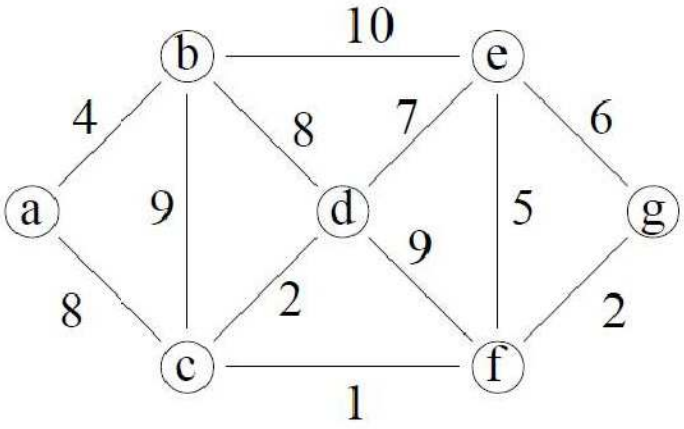

ı example.

DFS.

ons and explain any three.

ood hash function?

53. Explain various Hash collision resolution techniques with examples

54. Write a selection sort algorithm and also discuss its efficiency.

55. Write an algorithm for Insertion sort method. Explain each step with an example.

56. Write an algorithm for Bubble sort method. Explain each step wi h an example.

57. Write down precondition and algorithm of binary search metho .

Atmiya University

Faculty of Engineering and Technology
Department of Computer Engineering

Question Bank

Course Code	Course Title
21BTCECC303/21BTCSCC303	**Computer Organization**

Unit 1: Basic Computer Organization and Design

1. Define register transfer language. Explain the register transfer process using block diagram and timing diagram.
2. Explain Common bus system with multiplexers using necessary figure.
3. Explain bus system constructed with Bus with three state buffer using necessary diagrams.
4. Give the classification of various microoperations. Explain the various arithmetic and logic microoperations.
5. Explain with the diagram one stage of logic circuit.
6. Explain various types of the Shift Microoperations.
7. Explain using diagram one stage of arithmetic logic shift.
8. Explain various types of Instructions using necessary figure.
9. Explain block diagram of the timing and control unit.
10. Explain Input-Output Configuration with necessary figure.
11. Explain Design of Accumulator Logic with necessary figure.

Unit 2: Central Processing Unit

1. Draw and explain block diagram of the register organization.
2. Explain stack organization with necessary diagram.
3. Explain PUSH and POP instructions with examples.
4. Explain various Instruction Formats with examples.
5. Define addressing mode. Explain various Addressing Modes with examples.
6. Give the Classification of Instructions. Explain each category with example.
7. Give comparison between RISC and CISC architecture.

Atmiya University

Unit 3: Pipelining and Computer Algorithms

1. Explain the concept of parallel processing in digital computer.
2. Explain the concept of Pipelining in digital computer with suitable example and necessary diagram.
3. Explain the concept of Arithmetic Pipeline in digital computer with suitable example and necessary diagram.
4. Explain the concept of instruction Pipeline in digital computer using flow chart. Draw diagram of the timing of instruction pipeline.
5. Explain the concept of RISC Pipeline in digital computer. Explain using diagram the pipeline timing with data conflict and how it is resolved with delayed load.
6. Explain Addition and Subtraction Algorithm with diagram of the Hardware Implementation.
7. Explain Booth's multiplication algorithm using flow chart. Multiply two numbers -4 and 3 using Booth algorithm.

Unit 4: Memory Organization

1. Explain the concept of Memory Hierarchy in digital computer with necessary diagram.
2. Explain main memory(RAM and ROM) in digital computer with necessary diagram.
3. Explain auxiliary Memory with necessary figure.
4. Explain the block diagram of associative memory.
5. Explain concept of cache memory in digital computer with necessary diagram.

Atmiya University

6. Explain concept of virtual memory in digital computer with necessary diagram.

Unit 5: Input Output Organization and Processors

1. Explain the connection of processor with input output device using necessary diagram.
2. Explain concept of Asynchronous data transfer in digital computer with necessary figure.
3. Explain the steps to transfer data form I/O to memory using DMA transfer.
4. What is the requirement of array Processor in computer system? Explain the connection diagram of attached array processor with general purpose computer.
5. What is multiprocessor system? Explain the system bus structure for multiprocessor.

Atmiya University

Course Code	Course Title
21BTCECC304/21BTCSCC304	**Object oriented programming using c++**

General OOP Concepts

1. What is Object-Oriented Programming (OOP)?
2. What are the four main principles of OOP?
3. What is the difference between a class and an object?
4. What is encapsulation in OOP, and why is it important?
5. What is inheritance, and how is it implemented in C++?
6. What is polymorphism in OOP? Provide an example.
7. What is abstraction in OOP? How does C++ support it?
8. What are access specifiers in C++? Name them.
9. What is the difference between public, private, and protected access specifiers?
10. What is a constructor, and why is it used in C++?

C++ Class and Object Basics

11. How do you define a class in C++?
12. How do you create an object of a class in C++?
13. What is a member function in C++?
14. What is the significance of the `this` pointer in C++?
15. How can you initialize data members of a class in C++?
16. What is a static data member? How is it different from a normal data member?
17. What is a static member function, and when is it used?

Inheritance

18. What are the different types of inheritance supported in C++?
19. How do you define inheritance in C++?
20. What is the use of the `protected` keyword in inheritance?
21. What is the difference between single and multiple inheritance?
22. What is the role of the `virtual` keyword in inheritance?

Polymorphism

23. What is function overloading in C++?
24. What is operator overloading in C++?
25. What is the difference between compile-time and runtime polymorphism?
26. How is runtime polymorphism achieved in C++?
27. What is a virtual function in C++?

Advanced OOP Features

28. What is a pure virtual function in C++? How is it implemented?
29. What is an abstract class in C++?
30. What is the significance of virtual destructors in C++?

Atmiya University
Rajkot

Faculty of Engineering and Technology
Department of Computer Engineering

Course Code	Course Title
21BTCECC401/21BTCSCC401	**Operating System**

Question Bank

Unit: 1

Sr. No.	Question	Mark
1	What Is Operating System?Explain All Types Of Operating System.	4
2	Explain Multithreading.	4
3	What Is Process.Explain In Detail.	4
4	Explain Process and Process Life cycle.	7
5	What Is Scheduling Algorithm .Explain In Brief.	7
6	Explain Real time operating system.	4
7	What Is Pcb ?Explain In Detail.	7

Atmiya University

Unit: 2

Sr. No.	Question	Mark
1	Explain Hardware Solution.	4
2	What Is Message Passing.	7
3	What Is Message Passing.	7
4	Discuss Peterson's Algorithm In Detail.	7
5	What Is Reader Writer Problem.	4
6	What Is The Producer Consumer Problem.	4
7	Explain Dinning Philosopher With The Help Of Example.	7

Atmiya University

Unit: 3

Sr. No.	Question	Mark
1	What Is Segmentation ?	4
2	Explain Internal Fragmentation And External Fragmentation.	4
3	What Is Tlb ?How Does It Help To Speed Up Paging?	4
4	Explain Paging In Detail.	4 or 7
5	Explain Following Allocation Algorithms:1)First Fit 2) Best Fit 3) Worst Fit	7

Atmiya University

Unit: 4

Sr. No.	Question	Mark
1	Explain Directory Structure In Detail.	7
2	Explain Device Controller In Brief.	4
3	Explain Goals Of I/O Software.	4
4	Explain The Direct Memory Access In Detail	7
5	Explain Disk Arm Scheduling Algorithm	7
6	Explain Any Three Page Replacement Policies.	7

Atmiya University

Unit: 5

Sr. No.	Question	Mark
1	What Is Circular Wait.	4
2	Explain in detail All Linux Command(Pwd,Cal Date,Cat,Cd)	4
3	Explain Difference Between Linux Operating System And Windows Operating System.	4
4	Explain Deadlock Characteristics.	7
5	What Is Deadlock .Explain Deadlock Prevention	7

Atmiya University

Faculty of Engineering and Technology
Department of Computer Engineering

Course Code	Course Title
21BTCECC501/21BTCSCC501	**Analysis & Design of algorithms**

1. Define Activity Selection Problem. Explain how it can be solved using Greedy method.
2. Solve the following Fractional Knapsack Problem using Greedy Algorithm. There are five items whose weights and values are given in following arrays. Weight w [] = {1,2,5,6,7} Value v [] = {1, 6, 18, 22, 28} Show your equation and find out the optimal knapsack items for weight capacity of 11 units.
3. Using greedy algorithm find an optimal schedule for following jobs with n=7. profits: (P1, P2, P3, P4, P5, P6, P7) = (4, 6, 19, 23, 8, 3, 40) and deadline (d1, d2, d3, d4, d5, d6, d7) = (2, 4, 4, 5, 2, 3, 2)
4. Find MST for the given graph using Prim's algorithm.

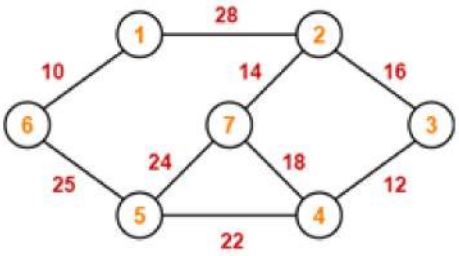

5. Find MST for given graph using Krushkal's algorithm.

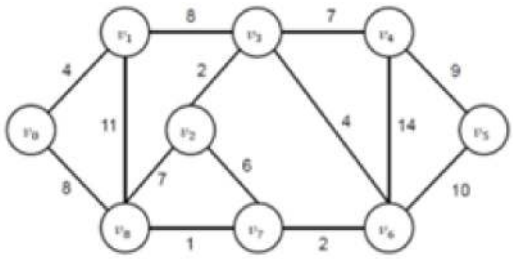

6. Determine LCS of {abaababababb} and {abaa}.
7. Explain 0/1 knapsack using suitable example.

Atmiya University

8. Define Making Change Problem. Explain how it can be solved using Dynamic Programming.
9. Using dynamic programming find out the optimal sequence for the matrix chain multiplication of A_{4x10}, B_{10x3}, C_{3x12}, D_{12x20} matrices.
10. Explain All Pair Shortest Path with example.
11. Define 4 Queen's Problem. Explain how it can be solved using Backtracking.
12. Explain how to solve knapsack problem using backtracking.
13. Write and explain Travelling Salesman problem with example.
14. Show the comparisons with Rabin-Karp string matcher makes for the pattern P=0001 in the text T=000010001010001
15. Show the comparisons that KMP string matcher makes for the pattern P=abaa in the text T=ababbaabaabbbabaa
16. Define P, NP, NP-Hard and NP-Complete Problems.

Atmiya University

Faculty of Engineering and Technology
Department of Computer Engineering

Course Code	Course Title
21BTCECC501/21BTCSCC501	**Analysis & Design of algorithms**

1. Define Activity Selection Problem. Explain how it can be solved using Greedy method.
2. Solve the following Fractional Knapsack Problem using Greedy Algorithm. There are five items whose weights and values are given in following arrays. Weight w [] = {1,2,5,6,7} Value v [] = {1, 6, 18, 22, 28} Show your equation and find out the optimal knapsack items for weight capacity of 11 units.
3. Using greedy algorithm find an optimal schedule for following jobs with n=7. profits: (P1, P2, P3, P4, P5, P6, P7) = (4, 6, 19, 23, 8, 3, 40) and deadline (d1, d2, d3, d4, d5, d6, d7) = (2, 4, 4, 5, 2, 3, 2)
4. Find MST for the given graph using Prim's algorithm.

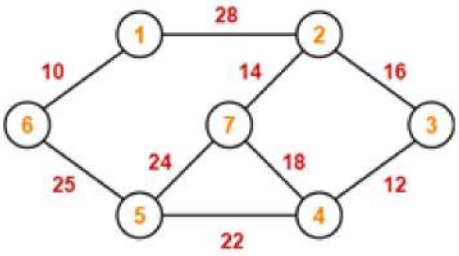

5. Find MST for given graph using Krushkal's algorithm.

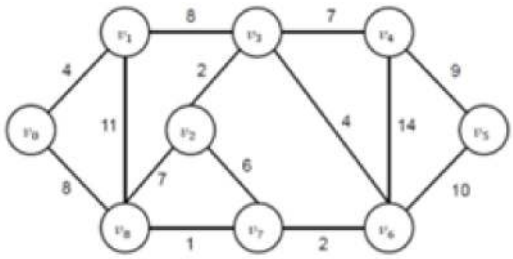

6. Determine LCS of {abaababababb} and {abaa}.
7. Explain 0/1 knapsack using suitable example.

Atmiya University

8. Define Making Change Problem. Explain how it can be solved using Dynamic Programming.
9. Using dynamic programming find out the optimal sequence for the matrix chain multiplication of A_{4x10}, B_{10x3}, C_{3x12}, D_{12x20} matrices.
10. Explain All Pair Shortest Path with example.
11. Define 4 Queen's Problem. Explain how it can be solved using Backtracking.
12. Explain how to solve knapsack problem using backtracking.
13. Write and explain Travelling Salesman problem with example.
14. Show the comparisons with Rabin-Karp string matcher makes for the pattern P=0001 in the text T=000010001010001
15. Show the comparisons that KMP string matcher makes for the pattern P=abaa in the text T=ababbaabaabbbabaa
16. Define P, NP, NP-Hard and NP-Complete Problems.

Atmiya University

Faculty of Engineering and Technology
Department of Computer Engineering

Course Code	Course Title
21BTCECC503/21BTCSCC502	**Python for data science**

Unit: 1 Overview of Python and Data Science

Sr. No.	Question	Mark
1	What is Python primarily used for in Data Science?	1
2	Which Python library is widely used for data manipulation and analysis?	1
3	What is the purpose of the import statement in Python?	1
4	In Python, what does the following code do? import numpy as np	1
5	Which Python library is commonly used for creating visualizations?	1
6	What is the main purpose of Data Science?	1

Sr. No.	Question	Mark
1	Write History of python and data science, Features of python	7
2	Write a python program to print Fibonacci series.	4
3	Explain Comments, Docstrings.	4
4	Explain different operators in python	4
5	What is Command line argument	7
6	Explain different Control Statements in python	7
7	Explain different data types String, Array, List, Tuple, Set, Dictionary	7
8	Difference between Local and Global variables	4

Atmiya University

Faculty of Engineering and Technology
Department of Computer Engineering

Unit: 2 Python Decision making and Loops, Functions and OOP Concepts

Faculty of Engineering and Technology
Department of Computer Engineering

Sr. No.	Question	Mark
1	What is inheritance in OOP?	1
2	Which of the following is the correct syntax for defining a method within a class in Python? A) def method self(): B) def method(): C) def method(self): D) define method(self):	1
3	Which of the following statements correctly creates an instance of a class named Car? A) my_car = Car() B) my_car = car() C) my_car = class(Car) D) my_car = new Car()	1
4	What does the return statement do in a function?	1
5	What keyword is used to define a class in Python?	1
6	What is the purpose of the break statement in loops?	1
7	Which loop is ideal for iterating over a known list of items in Python?	1
8	Which of the following is a valid function definition in Python? A) def my_function[]: B) def my_function: C) def my_function(): D) def my_function[]()	1

Atmiya University

Faculty of Engineering and Technology
Department of Computer Engineering

Sr. No.	Question	Mark
1	Explain Conditional Statement & loop with example	7
2	What is function? Explain with example	4
3	What is Recursion? Explain in Detail	4
4	Write short note on Module.	4
5	Write a program to check entered number is prime or not.	7
6	Print any pyramid using for loop	4
7	What is OOP?	4
8	Explain Constructor with example	4
9	Explain types of method in python	7
10	Explain Inheritance with its types	7
11	Explain following concept with example ● Polymorphism, ● Method overloading ● Method overriding	7

Unit: 3 : Getting Your Hands Dirty With Data

Atmiya University

Faculty of Engineering and Technology
Department of Computer Engineering

Sr. No.	Question	Mark
1	How do you install the Pandas library in Python?	1
2	Which plot is commonly used to show the distribution of numerical data?	1
3	Which Python library is used for handling multi-dimensional arrays?	1
4	Which function in Pandas returns the first few rows of a dataset?	1
5	Name one Python library used for data visualization.	1
6	What is the delimiter used in a CSV file by default?	1
7	Which function in Pandas is used to load a CSV file?	1
8	What does CSV stand for in the context of datasets?	1

Sr. No.	Question	Mark
1	Explain different types of file mode with example	4
2	Write a program to create a file of random numbers then separate even and odd numbers in separate file.	7
3	Write python program that copy content of one file to other and convert that content into uppercase.	4
4	Write short note on pandas?	4
5	Write a python program that create a data frame and save into csv file.	7
6	What is Directories? Explain with example and its application?	7

Atmiya University

Faculty of Engineering and Technology
Department of Computer Engineering

Unit: 4 Working with Numpy Arrays, Exception Handling, Regular Expression

Sr. No.	Question	Mark
1	What does NumPy stand for?	1
2	Which keyword is used to handle exceptions in Python?	1
3	Which exception is raised when you divide by zero in Python?	1
4	Name one built-in Python exception.	1
5	What does `\d` match in a regular expression?	1
6	Which regular expression matches an email address?	1
7	Which function checks if a string matches a regular expression pattern?	1
8	What is the purpose of `re.compile()`?	1
9	What does the `re` module in Python stand for?	1
10	What does the metacharacter `^` signify in a regular expression?	1

Atmiya University

Faculty of Engineering and Technology
Department of Computer Engineering

Sr. No.	Question	Mark
1	Explain Module and Import	4
2	How to create 1D and2 D array using numpy?	4
3	Explain following concept with example ● Boolean indexing ● Fancy indexing ● Universal functions ● Data processing using arrays ● File input and output with arrays	4
4	Write Short Note on Exception Handlings	7
5	Define RE & and different methods of it with example	7
6	Write python program that extract email from given text?	7
7	Write python program that validate Mobile number our country?	7

Atmiya University

Unit: 5 Data Visualization and Simple APIs

Sr. No.	Question	Mark
1	What is data visualization?	1
2	Name one type of plot used to show the relationship between two variables.	1
3	What function is used in Matplotlib to display a plot?	1
4	What does API stand for?	1
5	What does the HTTP method `GET` do?	1
6	Which function in Matplotlib is used to create a line plot?	1
7	Which Python function is used to send a GET request to an API?	1
8	How do you parse JSON data in Python?	1
9	What type of data is best visualized using a pie chart?	1
10	Which library in Python is commonly used for data visualization?	1

Atmiya University

Faculty of Engineering and Technology
Department of Computer Engineering

Sr. No.	Question	Mark
1	Write short not on each with example ● Line Chart, ● Bar Chart, ● Pie Chart	4
2	Explain any 4 methods of turtle with example	4
3	Draw Graphics smiley using turtle.	7
4	What is Pylab?	4
5	Explain basic controls of tkinter with its properties.	7
6	Draw Login form using tkinter.	7
7	What is API? Write its advantages and disadvantages.	4
8	Write a python program that demonstrate the use of API	7
9	What is Web scraping?	4
10	Write a python program that scrap any website.	7

Atmiya University

Course Code	Course Title
21BTCECC601	Artificial Intelligence

Introduction to AI

1. What is Artificial Intelligence (AI)?
2. What are the main goals of AI?
3. What are the different types of AI (e.g., narrow AI, general AI, and super AI)?
4. What is the difference between AI, Machine Learning (ML), and Deep Learning?
5. What are some common applications of AI in daily life?

AI Techniques and Concepts

6. What is an agent in AI?
7. What is the difference between supervised, unsupervised, and reinforcement learning?
8. What is a neural network, and how does it work?
9. What is the Turing Test, and why is it significant?
10. What are some of the main programming languages used in AI development?

AI Algorithms and Methods

11. What is heuristic search in AI?
12. What is a knowledge-based system in AI?
13. What is the difference between breadth-first search and depth-first search?
14. What is Natural Language Processing (NLP)?
15. What is computer vision, and how is it used in AI?

Learning and Problem Solving

16. What is a machine learning model?
17. What is overfitting in machine learning, and how can it be prevented?
18. What is the role of training data in AI?
19. What is the difference between classification and regression in AI?
20. What are some common AI frameworks and libraries?

Course Code	Course Title
21BTCECC602	Automata Theory

Introduction to Automata Theory

1. What is Automata Theory, and why is it important in computer science?
2. Define a formal language in Automata Theory.
3. What is the difference between deterministic and non-deterministic models in Automata Theory?
4. What is the purpose of studying Automata Theory in computational theory?
5. What are the major types of automata used in computer science?

Finite Automata (FA)

6. What is a Finite Automaton (FA)?
7. What are the components of a Deterministic Finite Automaton (DFA)?
8. What is the difference between a DFA and an NFA (Non-deterministic Finite Automaton)?
9. How is the transition function represented in a DFA?
10. What does it mean for a finite automaton to "accept" a language?

Regular Languages

11. What is a regular language?
12. How are regular expressions related to finite automata?
13. What is the difference between a regular language and a context-free language?
14. What is the Pumping Lemma for regular languages, and what is its purpose?
15. Can all finite automata be converted to regular expressions? Why?

Context-Free Grammar (CFG) and Pushdown Automata (PDA)

16. What is a context-free grammar (CFG)?
17. What are the components of a context-free grammar?
18. What is a Pushdown Automaton (PDA), and how does it differ from finite automata?
19. Give an example of a language that can be recognized by a PDA but not by a finite automaton.

Atmiya University Rajkot

20. What is a stack, and how does it help in PDA operations?

Turing Machines

21. What is a Turing Machine?
22. What are the components of a Turing Machine?
23. How does a Turing Machine differ from a finite automaton?
24. What is the significance of a Turing Machine in computational theory?
25. What is meant by "recognizable" and "decidable" languages in the context of Turing Machines?

Advanced Topics in Automata

26. What is a universal Turing Machine?
27. What is the Halting Problem, and why is it undecidable?
28. Define and differentiate between decidable and undecidable problems.
29. What is the Church-Turing Thesis, and why is it important in Automata Theory?
30. What is the significance of computational complexity in Automata Theory?

Atmiya University
Rajkot

Course Code	Course Title
21BTCECL601	Advance Web Programming

General Concepts

1. What is advanced web programming?
2. What are the differences between server-side and client-side programming?
3. What is the role of APIs in web programming?
4. How does the REST architecture work in web programming?
5. What is the difference between RESTful and SOAP web services?

Frontend Development

6. What are Single Page Applications (SPAs), and how do they work?
7. What is the Document Object Model (DOM), and why is it important?
8. What is the role of JavaScript frameworks like React, Angular, and Vue in modern web development?
9. How does the Virtual DOM improve performance in React?
10. What is WebAssembly, and how does it differ from JavaScript?

Backend Development

11. What is the Model-View-Controller (MVC) architecture in web development?
12. What are middleware components in backend frameworks like Express.js or ASP.NET Core?
13. How do backend frameworks like Django, Ruby on Rails, or Laravel differ from frontend frameworks?
14. What is GraphQL, and how does it differ from REST APIs?
15. What is a web server, and how does it differ from an application server?

Database Integration

16. What is the difference between relational and non-relational databases in web development?
17. What is an ORM (Object-Relational Mapping) tool, and how is it used in web programming?
18. What is a NoSQL database, and when should it be used over a traditional SQL database?

Atmiya University
Rajkot

19. How is database connection pooling implemented in web applications?
20. What is database normalization, and why is it important?

Web Security

21. What are common web security threats such as XSS, CSRF, and SQL injection?
22. What is HTTPS, and how does it differ from HTTP?
23. How do you implement user authentication and authorization in web applications?
24. What is the role of JSON Web Tokens (JWT) in secure web programming?
25. How does Content Security Policy (CSP) help secure web applications?

Performance Optimi□ ation

26. What is lazy loading, and how does it improve performance?
27. What are Content Delivery Networks (CDNs), and why are they used in web applications?
28. What are web workers, and how do they enhance performance in JavaScript?
29. What is server-side rendering (SSR), and how does it differ from client-side rendering (CSR)?
30. How can you optimize database queries to improve the performance of web applications?

Atmiya University
Rajkot

Course Code	Course Title
21BTCECL602	.Net Technology

Introduction to .NET

1. What is .NET technology?
2. What are the main components of the .NET framework?
3. What is the difference between .NET Framework, .NET Core, and .NET 5/6/7?
4. What is the Common Language Runtime (CLR)?
5. What is the purpose of the Base Class Library (BCL) in .NET?

Programming in .NET

6. What languages are supported by .NET?
7. What is the Common Type System (CTS) in .NET?
8. What is the purpose of the Common Language Specification (CLS)?
9. What is an assembly in .NET, and what are its types?
10. What is the Global Assembly Cache (GAC) in .NET?

Object-Oriented Programming in .NET

11. How does .NET support Object-Oriented Programming (OOP)?
12. What is a namespace in .NET, and why is it used?
13. What is the difference between a class and a struct in .NET?
14. How is inheritance implemented in .NET?
15. What is the purpose of interfaces in .NET?

Memory Management

16. How does garbage collection work in .NET?
17. What is the difference between managed and unmanaged code?
18. What are value types and reference types in .NET?
19. What is the IDisposable interface used for?
20. What is the purpose of the `using` statement in .NET?

ASP.NET

Atmiya University
Rajkot

21. What is ASP.NET, and how does it relate to .NET?
22. What is the difference between ASP.NET Web Forms and ASP.NET MVC?
23. What is Razor in ASP.NET?
24. What are middleware components in ASP.NET Core?
25. How is dependency injection implemented in ASP.NET Core?

Data Access

26. What is ADO.NET, and how is it used for database access?
27. What is Entity Framework (EF), and why is it used?
28. What are LINQ queries in .NET?
29. What is the difference between connected and disconnected data access in ADO.NET?
30. How does .NET handle configuration, such as connection strings?

Course Code	Course Title
21BTCECL603	**Big Data**

Introduction to Big Data

1. What is Big Data, and why is it important?
2. What are the "3 Vs" of Big Data, and how do they define it?
3. What are some common applications of Big Data in different industries?
4. How is Big Data different from traditional data?
5. What are the challenges associated with Big Data?

Big Data Architecture

6. What is a distributed computing system, and why is it important in Big Data?
7. What is Hadoop, and what are its main components?
8. What is the role of HDFS (Hadoop Distributed File System) in Big Data processing?
9. What is a data lake, and how does it differ from a data warehouse?
10. What is the Lambda Architecture, and how is it used in Big Data?

Big Data Tools and Technologies

11. What is Apache Spark, and how is it different from Hadoop?
12. What is MapReduce, and how does it work in processing Big Data?
13. What is Apache Kafka, and what is its role in Big Data systems?
14. What is NoSQL, and how does it differ from traditional SQL databases?
15. What are some examples of NoSQL databases commonly used in Big Data?

Data Analysis

16. What is data preprocessing, and why is it necessary in Big Data analysis?
17. What is data visualization, and what are some popular tools used for it?
18. What are machine learning algorithms, and how are they used in Big Data analysis?
19. What is real-time data analysis, and how is it achieved in Big Data systems?
20. How does clustering differ from classification in data analysis?

Big Data Design

Atmiya University
Rajkot

21. What is schema design in Big Data systems?
22. How do you design a system to handle both structured and unstructured data?
23. What is the role of ETL (Extract, Transform, Load) in Big Data pipelines?
24. What is data partitioning, and why is it important in Big Data?
25. How do you ensure fault tolerance in Big Data systems?

Big Data Challenges and Trends

26. What are some common scalability issues in Big Data systems?
27. What is data governance, and why is it important in Big Data projects?
28. What are the ethical considerations when working with Big Data?
29. How does cloud computing benefit Big Data analysis?
30. What is edge computing, and how does it complement Big Data systems?

Course Code	Course Title
21BTCECL701	**Machine learning**

Q-1 What is Machine learning? Explain Machine learning schematic model with figure. Q-2 Explain types of learning with example.
Q-3 Explain Hypothesis Space by proper example with Figure.

Q-4 Write a short note on inductive bias.

Q-5 What are the evaluation criteria's of learning algorithm?

Q-6 Write note on Cross validation.

Module-2:

Q-1 What is Regression? Explain types of regression.

Q-2 Predict vehicles sales of year 2017 using linear regression Technique.

Year	GDP (x)	Vehicle sale data in lakhs (y)
2011	6.2	26.3
2012	6.5	26.65
2013	5.48	25.65
2014	6.54	26.01
2015	7.18	27.9
2016	7.93	30.47
2017	7.5	??? (predict)

Machine Learning Basics

1. What are the main differences between supervised, unsupervised, and reinforcement learning?
2. What are the key components of a Machine Learning model?
3. Explain the concept of overfitting and underfitting in Machine Learning.
4. What is the difference between training, validation, and testing datasets?
5. Define a loss function and its role in Machine Learning.

Hypothesis Space and Inductive Bias

6. What is the difference between a hypothesis and a hypothesis space?
7. How does the size of the hypothesis space affect the learning process?
8. Explain the importance of inductive bias in Machine Learning with an example.
9. How does the hypothesis space influence the model's generalization?
10. What is Occam’s Razor, and how is it related to inductive bias?

Evaluation and Validation

11. What are the different types of performance metrics for classification problems?
12. How is the confusion matrix used to evaluate a classification model?
13. What is precision, recall, and F1-score, and how are they calculated?
14. Explain the concept of the Receiver Operating Characteristic (ROC) curve and AUC.
15. What are the advantages of k-fold cross-validation over simple train-test split?

Types of Learning and Algorithms

16. Provide examples of algorithms used for supervised learning and explain one of them briefly.
17. How is clustering performed in unsupervised learning? Provide an example.
18. Explain how reinforcement learning differs from supervised learning.
19. What are some real-world applications of unsupervised learning?
20. What is semi-supervised learning, and when is it used?

Course Code	Course Title
21BTCECL702	**Data Analytics using R**

Basic Level

1. What are the basic data types in R?
2. How do you import a CSV file into R? Write the command.
3. What are the different data structures in R?
4. How do you check the structure of a dataset in R?
5. Write the R command to create a data frame.
6. What is the difference between `matri` and `data.frame` in R?
7. Explain the use of the `summar ()` function in R.
8. How do you install and load a package in R?
9. What is the purpose of the `ggplot2` package?
10. How can you subset data in R?

Intermediate Level

11. How do you handle missing data in R?
12. Write R code to calculate the mean and median of a column in a data frame.
13. What is the difference between `appl (), lappl (),` and `sappl ()` functions in R?
14. Explain the use of `dpl` package for data manipulation.
15. How do you merge two datasets in R?
16. What is the difference between `inner_join()` and `full_join()` in `dpl`?
17. How do you filter rows in a dataset using R?
18. Write an R script to create a bar plot using `ggplot2`.
19. How do you change the column names of a data frame in R?
20. Explain the use of the `tid` package in R.

Atmiya University Rajkot

Advanced Level

21. What is the use of the `caret` package in R for machine learning?
22. How do you create a linear regression model in R?
23. Explain the use of the `cor()` function in R.
24. Write an R script to perform k-means clustering on a dataset.
25. How can you visualize a correlation matrix in R?
26. What is the purpose of the `tapply()` function in R?
27. How do you create a time series object in R?
28. Explain the difference between `for` loops and `vectorized` operations in R.
29. How do you handle large datasets in R?
30. Write R code to perform a hypothesis test (e.g., t-test) on a dataset.

Atmiya University
Rajkot

Course Code	Course Title
21BTCECL704	**Block Chain Technology**

General Understanding

1. What is blockchain technology, and how does it work?
2. What are the main components of a blockchain?
3. What is the difference between public and private blockchains?
4. How is data stored in a blockchain?
5. What is a block in blockchain?

Cryptography and Security

6. How does cryptography play a role in blockchain technology?
7. What is a hash function, and why is it important in blockchain?
8. What is a digital signature, and how is it used in blockchain transactions?
9. How does blockchain ensure data immutability?
10. What is a Merkle tree, and how does it work in a blockchain?

Consensus Mechanisms

11. What is a consensus mechanism?
12. How does Proof of Work (PoW) work in blockchain?
13. What is Proof of Stake (PoS), and how is it different from PoW?
14. Can you explain other consensus mechanisms like Delegated Proof of Stake (DPoS) or Practical Byzantine Fault Tolerance (PBFT)?
15. Why is consensus important in a blockchain network?

Applications

16. What are some real-world applications of blockchain technology?
17. How is blockchain used in supply chain management?
18. What role does blockchain play in cryptocurrency?
19. How is blockchain technology used in the healthcare industry?
20. What are smart contracts, and how do they work?

Blockchain Ecosystem

21. What is the role of nodes in a blockchain network?
22. What is a decentralized application (dApp)?
23. How is a blockchain ledger different from a traditional database?

24. What is a fork in blockchain, and what types of forks exist?
25. What are tokens, and how do they function in a blockchain ecosystem?

Challenges and Future Trends

26. What are the scalability challenges in blockchain technology?
27. How does blockchain impact energy consumption?
28. What are the privacy concerns associated with blockchain technology?
29. What is interoperability in blockchain, and why is it important?
30. How is blockchain expected to evolve in the future?

Atmiya University
Rajkot

Course Code	Course Title
21BTCECL705	**Service Oriented Architecture**

General Understanding

1. What is Service-Oriented Architecture (SOA)?
2. What are the key principles of SOA?
3. How does SOA differ from traditional monolithic architecture?
4. What are the main components of SOA?
5. What is a service in the context of SOA?

Services and Communication

6. How do services in SOA communicate with each other?
7. What is a web service in SOA, and how does it work?
8. What are the different types of web services commonly used in SOA?
9. What is the role of XML in SOA?
10. What is SOAP, and how is it used in SOA for communication?

Service Design and Development

11. What are the benefits of using SOA in software development?
12. How do you design services in SOA to be reusable?
13. What is loose coupling, and why is it important in SOA?
14. How does SOA enable scalability in enterprise applications?
15. What are some common service design patterns in SOA?

Security

16. How is security handled in a Service-Oriented Architecture?
17. What is WS-Security, and how does it contribute to SOA security?
18. How can services in SOA be authenticated and authorized?
19. What are the common threats to SOA, and how can they be mitigated?
20. What is the role of encryption in SOA communication?

Governance and Management

21. What is SOA governance, and why is it important?
22. What tools or frameworks are typically used for SOA governance?
23. How can services be monitored and managed in SOA?
24. What is versioning in SOA, and why is it important for service management?
25. How does SOA support service lifecycle management?

Atmiya University
Rajkot

Integration and Interoperability

26. How does SOA support integration between different systems?
27. What is an Enterprise Service Bus (ESB), and how does it relate to SOA?
28. How does SOA enable interoperability between heterogeneous systems?
29. What is a service registry, and why is it necessary in SOA?
30. How does SOA improve system flexibility and adaptability to change?

Atmiya University
Rajkot

Course Code	Course Title
21BTCECL706	**Research Methodology**

Unit:1

Sr. No.	Question	Mark
1	Define and explain the term □Research□. Explain its importance an objectives.	4
2	Define the main issues which should receive the attention of the researcher in formulating the research problem. Give suitable examples.	4
3	What are the categories of Research?	7
4	What is Difference between Quantitative Research and Qualitative Research?	4
5	What is Difference between Basic Research and Applied Research?	7
6	Describe basic steps of research.	7
7	What are the criteria of good research?	7
8	What are Types of research?	7
9	What is actual Meaning of research problem and how it helps in selection of research problem?	7

Unit:2

Sr.		Mark

Atmiya University

No.	Question	
1	What is Importance of Literature Review?	4
2	What are the Sources of Literature and how to decide which sources you will need.	4
3	Differentiate between journals, conferences, books, maga□ ines and their quality.	4
4	Finding Information about How to conduct effective searches?	7
5	How to find relevant papers related to your area of research and how to capture critical information?	7
6	Write notes to organi□ e your ideas - Compare ideas and concepts from different papers (Related to your topic)	4
7	Review of related literature- Meaning, necessity and sources.	4
8	Discuss the various methods of research? Explain the various factors to be considered in making the decision of sampling method.	7
9	What is necessity of literature?	4
10	What are the sources of to collect literature to write research paper?	7

Unit:3

Sr. No.	Question	Mark

Atmiya University

1	How do you carry Literature Review? What are the advantage of same?	4
2	Explain the significance of primary data. What are the limitations of primary data? Explain in brief the stages in data processing.	4
3	What are the Types of research design- exploratory, descriptive, Casual?	4
4	Definition and Purpose of research design.	4
5	Describe the Tools and techniques use for data collection which include questionnaire, schedule, interview, observation, case study, survey etc.	7
6	Differentiate Primary vs. Secondary Data.	7
7	Types of random sampling and non-random sampling.	7
8	All difference in material is important.	7
9	Describe the Sampling design Tools for data collection.	7

Unit:4

Sr. No.	Question	Mark
1	How to write Research Proposal	4
2	Write down the format of Report Writing.	4
3	What is Effective technical writing? How to write Format of research proposal.	4
4	What is report? Explain types of Report.	**7**
5	Write down the Process of reviewing and proofreading your work.	**7**
6	What type of feedback is generally use to improve your work	**7**
7	Define research report and explain structure of research report.	**7**
8	What is Meaning and importance of workshop, seminar, conference, symposium etc. in research.	**7**

Atmiya University

Unit:5

Sr. No.	Question	Mark
1	What is plagiarism? Explain types of plagiarism.	4
2	How to Avoid Plagiarism?	4
3	Why is plagiarism unethical?	7

Atmiya University

Course Code	Course Title
21MCESCC101	**Cryptography & network security**

1. How does elliptic curve cryptography (ECC) compare to RSA in terms of efficiency and security?
2. Explain the concept of **homomorphic encryption** and its potential applications in secure computations.
3. What are the different types of **public-key encryption schemes** and their respective use cases?
4. What are **zero-knowledge proofs**, and how are they used to enhance privacy and security?
5. Describe the concept of **quantum-safe cryptography** and its importance in the era of quantum computing.
6. How does **RSA encryption** work, and what are its vulnerabilities, especially in the context of quantum computing?
7. Explain the **Diffie-Hellman key exchange** protocol and discuss its security vulnerabilities.
8. What is **Elliptic Curve Diffie-Hellman (ECDH)** and how does it improve upon traditional Diffie-Hellman?
9. How do **Digital Signatures** work, and what role do they play in authentication and integrity in secure communications?
10. What is **Hybrid Cryptography**, and why is it used in systems like SSL/TLS?
11. How does **Quantum Key Distribution (QKD)** work, and what is its potential in revolutionizing secure communication?
12. What is the **hash-based message authentication code (HMAC)**, and how does it differ from regular message authentication codes?
13. How does the **AES-GCM** (Advanced Encryption Standard - Galois/Counter Mode) provide both encryption and authentication in one operation?
14. Explain the concept of **post-quantum cryptography** and list the cryptographic algorithms believed to be resistant to quantum attacks.
15. What are **side-channel attacks**, and how can they be mitigated in cryptographic systems?

Advanced Network Security

16. What is the **SSL/TLS handshake**, and how does it ensure secure communication over the internet?
17. Explain the concept of **man-in-the-middle (MITM) attacks** and describe how protocols like HTTPS mitigate such attacks.
18. What is the **PKI (Public Key Infrastructure)**, and how does it manage digital certificates for secure communications?
19. How does **forward secrecy** work in cryptographic protocols, and why is it important for securing communications?

Atmiya University Rajkot

20. What is the role of **Firewalls** in network security, and how do they differ from **Intrusion Detection Systems (IDS)** and **Intrusion Prevention Systems (IPS)**?
21. Describe the working of **IPsec (Internet Protocol Security)** and its role in securing communications at the IP layer.
22. How do **VPNs (Virtual Private Networks)** provide security, and what are the common VPN protocols used for encryption and tunneling?
23. What is the **OAuth 2.0** protocol, and how does it facilitate secure authorization in web applications?
24. Explain the **X.509 certificate** structure and how it is used in the management of digital certificates for network security.
25. How does **TLS 1.3** improve upon previous versions of the protocol in terms of both security and performance?
26. What is a **Denial-of-Service (DoS)** attack, and how does a **Distributed Denial-of-Service (DDoS)** attack amplify the effects?
27. How do **Rate Limiting** and **Traffic Filtering** techniques protect systems from DDoS attacks?
28. What are **SQL injection attacks**, and what measures can be implemented in a web application to prevent such attacks?
29. Explain the concept of **network segmentation**, and how can it be used as a strategy to improve overall network security?
30. What is the **principle of least privilege**, and how does it help in minimizing potential damage in case of a security breach?

Atmiya University
Rajkot

Course Code	Course Title
21MCESCC102	**Machine learning**

Foundations & Theory

1. What is the **bias-variance tradeoff** in machine learning, and how does it affect model performance?
2. How do you deal with **class imbalance** in classification problems, and what are some advanced techniques for this?
3. What are **Gaussian Processes**, and how do they differ from traditional regression models?
4. How do **support vector machines (SVMs)** work, and what is the significance of the kernel trick in SVM?
5. Explain the difference between **L1 (Lasso) and L2 (Ridge) regularization** in regression models, and when would you use one over the other?
6. What is the **No Free Lunch Theorem** in machine learning, and how does it affect model selection?
7. Explain the role of **empirical risk minimization** in supervised learning and how it relates to the loss function.
8. What is the **bias correction** in **bootstrapping** and why is it important in ensemble methods?
9. What is **instance-based learning**, and how does it compare to model-based learning?
10. How does **reinforcement learning (RL)** differ from supervised and unsupervised learning? Discuss the exploration vs. exploitation dilemma.

Advanced Algorithms & Techniques

11. Explain how **Gradient Boosting Machines (GBMs)** work, and compare them to Random Forests in terms of performance and use cases.
12. What is **XGBoost**, and why is it considered one of the most powerful algorithms for structured/tabular data?
13. How does **Deep Learning** improve upon traditional machine learning techniques for tasks like image recognition and NLP?
14. What is the role of **backpropagation** in neural networks, and how does it allow the network to learn from errors?
15. Explain **Convolutional Neural Networks (CNNs)** and their application in image classification tasks. What are the key building blocks?
16. How does the **long short-term memory (LSTM)** unit solve the vanishing gradient problem in recurrent neural networks (RNNs)?
17. What is the **Transformer architecture**, and how does it differ from traditional sequence-to-sequence models like RNNs and LSTMs?
18. What are **autoencoders**, and how are they used for anomaly detection and dimensionality reduction?

Atmiya University Rajkot

19. What is **transfer learning**, and how can pre-trained models be used to enhance learning for new tasks with limited data?
20. How do **generative adversarial networks (GANs)** work, and what are their applications in generating synthetic data?

Advanced Topics in Unsupervised Learning

21. Explain how the **k-means clustering** algorithm works and discuss its limitations and how they can be overcome.
22. What is **DBSCAN (Density-Based Spatial Clustering of Applications with Noise)**, and how does it address the limitations of k-means in terms of cluster shape and noise?
23. How does **t-SNE (t-Distributed Stochastic Neighbor Embedding)** work for dimensionality reduction, and when is it preferable over PCA?
24. What are **hidden Markov models (HMM)**, and how are they used for time series prediction and sequence labeling tasks?
25. What is the **hierarchical clustering** algorithm, and how does it differ from other clustering techniques in terms of data structure?

Evaluation & Performance

26. What are **precision**, **recall**, and **F1-score**, and why are they important metrics for evaluating machine learning models?
27. How do you interpret the **ROC curve** and the **AUC-ROC** (Area Under the Curve) score, and how are they used to evaluate classification models?
28. What is the **confusion matrix**, and how can it be used to evaluate the performance of a classification model in a multi-class scenario?
29. How do **cross-validation** and **bootstrapping** help to assess model performance and reduce overfitting in machine learning?
30. What is the **A/B testing** framework in the context of machine learning, and how can it be used to assess model improvements in production?

Atmiya University
Rajkot

Course Code	Course Title
21MCESCC103	**Computer Algorithm**

1. What is the difference between a greedy algorithm and a dynamic programming approach?
2. Explain the concept of divide and conquer. Provide an example algorithm where divide and conquer is used.
3. How does Dijkstra's algorithm work, and what is its time complexity?
4. What is the time complexity of merge sort? How does it compare to quicksort in terms of performance?
5. Describe the difference between depth-first search (DFS) and breadth-first search (BFS) in a graph traversal.
6. What is the Bellman-Ford algorithm, and how does it handle negative weight cycles?
7. Explain the Knapsack problem and the difference between the 0/1 and fractional versions.
8. How do you solve the Traveling Salesman Problem (TSP) using dynamic programming? What is its time complexity?
9. What is the complexity of finding the shortest path in a graph using A* algorithm?
10. How does the Ford-Fulkerson method find the maximum flow in a network, and what is its time complexity?
11. What are NP-hard and NP-complete problems? Provide an example of each.
12. Describe the concept of dynamic programming and how it can be applied to the longest common subsequence problem.
13. Explain the difference between a binary heap and a Fibonacci heap. In which situations would you prefer one over the other?
14. How does the KMP (Knuth-Morris-Pratt) algorithm improve pattern matching over the brute force approach?
15. Describe the concept of amortized analysis and how it is used to analyze algorithms.
16. What is the importance of the "cut property" in graph algorithms, and how is it used in Kruskal's algorithm?
17. Explain the idea behind the Union-Find data structure and its use in Kruskal's algorithm.
18. How does the Floyd-Warshall algorithm compute the shortest paths between all pairs of vertices in a weighted graph?
19. What is the concept of topological sorting, and how is it used in scheduling problems?
20. Discuss the idea behind the randomization in the Quickselect algorithm and its expected time complexity.
21. What is the complexity of matrix chain multiplication, and how is dynamic programming used to optimize it?
22. Explain the concept of linear programming and how the simplex algorithm solves it.
23. What is the difference between a Trie and a Binary Search Tree? Where would you use a Trie over a BST?
24. How does the Rabin-Karp algorithm for string matching work, and how does it handle hashing?

Atmiya University Rajkot

25. What is the Boyer-Moore algorithm, and how does it optimize pattern matching over naive approaches?
26. Discuss the concept of K-d trees and how they are used for nearest-neighbor searches in multidimensional spaces.
27. How does the convex hull problem work, and what algorithms can solve it (e.g., Graham's scan, Jarvis's march)?
28. What is the difference between a deterministic and a nondeterministic Turing machine? How do they relate to complexity classes?
29. Describe the process and complexity of the matrix multiplication algorithm using Strassen's method.
30. How do you detect and handle cycles in a directed graph, and which algorithms are

Atmiya University
Rajkot

Faculty of Engineering and Technology
Department of Computer Engineering

Course Code	Course Title
21MCESCC201	**Design of Language Translators**

1. What are the key differences between a compiler and an interpreter in terms of functionality and execution flow?
2. How does lexical analysis work in a compiler, and what are the primary tasks of a lexical analyzer?
3. Explain the role of a syntax analyzer in a compiler. How does it detect syntax errors using formal grammar rules?
4. What is the difference between a context-free grammar (CFG) and a regular grammar, and how do they relate to the design of a parser?
5. How does the LL(1) parsing technique work, and what are its advantages and limitations compared to other top-down parsers?
6. Describe the operation of a recursive descent parser. How does it handle ambiguity in language grammar?
7. What are shift-reduce parsers, and how do they operate in bottom-up parsing? Provide an example of an algorithm used for this type of parsing.
8. Explain the concept of semantic analysis in compiler design. How does a semantic analyzer ensure the consistency of the syntax tree with respect to variable declarations and types?
9. What is an Abstract Syntax Tree (AST), and how is it used to represent a program's structure during the compilation process?
10. How does type checking work in a compiler, and what types of errors can occur related to type mismatches?
11. Describe the process of intermediate code generation in a compiler. Why is it necessary to generate intermediate code before producing machine code?
12. What are the differences between three-address code (TAC) and other intermediate representations, such as bytecode or assembly language?
13. What is the role of an optimization phase in a compiler, and what are some common optimization techniques like loop unrolling or constant folding?
14. How does dead code elimination work in compiler optimization, and why is it important for improving program performance?
15. Explain the concept of register allocation in the code generation phase. What techniques are used to efficiently allocate registers for variables?
16. What is the purpose of code generation in a compiler, and how does it map intermediate code to target machine instructions?
17. What are the differences between a one-pass and a multi-pass compiler? What are the advantages and trade-offs of each approach?
18. How does the symbol table in a compiler help in storing and managing information about variables, functions, and types during compilation?
19. What is the purpose of the error recovery mechanism in a parser, and what strategies are used to recover from syntax errors during parsing?
20. Explain the concept of backpatching in code generation, and how it helps in handling branches and jumps in assembly code.

Atmiya University Rajkot

21. What is the difference between static and dynamic semantic analysis, and how do they contribute to the validation of a source program?
22. How do garbage collection techniques work in a language translator, and what are the different approaches like reference counting and mark-and-sweep?
23. What is the role of lexical scope in programming languages, and how does it influence the design of a language translator?
24. Explain the concept of context-sensitive grammar and how it can be used in parsing programming languages with more complex rules.
25. How do intermediate representations, like control flow graphs (CFG) or data flow analysis, help in optimizing a program during compilation?
26. What is the role of a linker and loader in the context of program execution, and how do they work together after compilation?
27. How does the concept of "just-in-time" (JIT) compilation differ from traditional ahead-of-time (AOT) compilation, and what are the benefits of JIT in dynamic languages?
28. Describe how a language translator can handle the differences between imperative and declarative programming languages during the translation process.
29. What are the challenges and solutions involved in translating a programming language that supports concurrency or parallelism, such as synchronization and data races?
30. How does the design of a translator for a domain-specific language (DSL) differ from general-purpose language translators, and what are the special considerations?

Atmiya University
Rajkot

Faculty of Engineering and Technology
Department of Computer Engineering

Course Code	Course Title
21MCESCC202	**Computer vision**

1. What is the difference between image classification and object detection in computer vision?
2. Explain the concept of Convolutional Neural Networks (CNNs) and their role in computer vision tasks such as image recognition and segmentation.
3. How does a CNN filter work during convolution, and what role does padding and stride play in the process?
4. What is the significance of the ReLU activation function in CNNs, and why is it preferred over other activation functions like sigmoid or tanh?
5. How does the pooling layer in a CNN help reduce the dimensionality of the feature maps, and what are the different types of pooling techniques?
6. What is the architecture of a U-Net model, and how is it used for image segmentation tasks?
7. Explain the concept of Transfer Learning in computer vision and how pre-trained models like VGG16 or ResNet are used to fine-tune models for specific tasks.
8. What are Generative Adversarial Networks (GANs), and how do they work in the context of image generation and enhancement?
9. What is the role of feature extraction in computer vision, and how do methods like SIFT and SURF work in detecting and describing key points in images?
10. Explain the concept of optical flow in computer vision and how it is used to track motion between frames in a video.
11. What are the challenges and solutions in performing image recognition in a real-time environment, such as on mobile devices or embedded systems?
12. How does the YOLO (You Only Look Once) algorithm work for object detection, and what are its advantages over traditional object detection methods?
13. What is the difference between semantic segmentation and instance segmentation, and how do models like Mask R-CNN address these tasks?
14. How does the concept of homography work in computer vision, and how is it used in applications like image stitching and panorama creation?
15. What is edge detection, and how do algorithms like the Sobel operator and Canny edge detector work to detect boundaries in an image?
16. What is the purpose of data augmentation in computer vision, and how does it help improve model performance and prevent overfitting?
17. How does the Region-based Convolutional Neural Network (R-CNN) method work for object detection, and how does it differ from fast R-CNN and faster R-CNN?
18. What is the concept of feature pyramids, and how are they used to improve object detection at different scales?
19. Explain the concept of image super-resolution and how deep learning techniques are used to enhance low-resolution images.
20. How do deep learning-based models like CycleGANs enable style transfer and image-to-image translation tasks?

Atmiya University Rajkot

21. How does the concept of "attention" work in neural networks, and how is it applied in computer vision for tasks like image captioning and object recognition?
22. What is the significance of the Region Proposal Network (RPN) in faster object detection methods, and how does it work within Faster R-CNN?
23. How does the concept of instance normalization work in CNNs, and how is it different from batch normalization?
24. How are 3D vision and point cloud data processed in computer vision, and what algorithms are used for tasks like object recognition and scene reconstruction?
25. What are the challenges of computer vision in low-light or noisy environments, and what techniques are used to overcome them?
26. What is the difference between sparse and dense feature matching in stereo vision, and how do they impact 3D reconstruction accuracy?
27. How do self-supervised learning methods work in computer vision, and what are the benefits of using them over traditional supervised learning approaches?
28. What are Siamese networks, and how are they used in tasks like facial recognition and verification?
29. Explain the role of localization in object detection and how bounding boxes are used to indicate the position of detected objects.
30. How does facial recognition work in computer vision, and what are the challenges associated with accuracy, privacy, and fairness?

Faculty of Engineering and Technology
Department of Computer Engineering

Course Code	Course Title
21MCESCC203	**Cyber forensics**

1. What is the role of cyber forensics in incident response and how does it help in legal proceedings?
2. Explain the concept of digital evidence and the chain of custody. Why is it critical in cyber forensics investigations?
3. How do file systems like NTFS and FAT differ in terms of data recovery and forensic analysis?
4. What is the process of data carving, and how is it used to recover deleted or corrupted files?
5. Describe the process of disk imaging in digital forensics. What tools are commonly used for creating and analyzing disk images?
6. What are the different types of forensic artifacts that can be recovered from a system's memory, and what tools are used for memory analysis?
7. How does network forensics differ from traditional computer forensics, and what tools are used for monitoring and analyzing network traffic?
8. What is the role of metadata in digital forensics, and how can it provide critical information in a forensic investigation?
9. How can forensic investigators determine the origin and authenticity of a piece of digital evidence, such as an email or document?
10. Explain the concept of live forensics. What challenges are involved in performing forensic analysis on a live system, as opposed to a dead system?
11. How do forensic investigators handle encrypted data during an investigation, and what methods can be used to break encryption or bypass it legally?
12. What is the purpose of hash values in digital forensics, and how are they used to ensure data integrity during evidence collection and analysis?
13. Describe the process of recovering evidence from cloud storage systems. What challenges are faced in forensic analysis of data stored in the cloud?
14. How do investigators use timelines in cyber forensics, and what are the key sources of timestamped data in a digital investigation?
15. What is the importance of carving and analyzing unallocated space in file systems during forensic analysis?
16. Explain the process of mobile device forensics. What tools are used for extracting and analyzing data from smartphones and tablets?
17. How do investigators analyze internet artifacts, such as browser history, cookies, and cache, in a cyber forensics investigation?
18. What is a forensic duplicate (or bit-by-bit copy), and why is it crucial in maintaining the integrity of evidence during an investigation?
19. Explain the concept of steganography. How do investigators detect hidden information or data in images, audio, or other file types?
20. What role does the analysis of log files play in cyber forensics, and which types of logs are the most useful for investigating security incidents?
21. How is volatile memory (RAM) forensics different from traditional hard drive analysis, and what types of evidence can be retrieved from memory?

Atmiya University Rajkot

22. What are the key legal considerations when performing a cyber forensics investigation, especially concerning privacy and jurisdictional issues?
23. How does digital forensics apply to the investigation of cybercrimes like hacking, phishing, or data breaches? Provide examples of investigative approaches.
24. What is the process of investigating a data breach from a forensic perspective? What steps are taken to identify the attack vector and trace the intruder's actions?
25. How can digital forensics help in identifying the source of malware, and what tools are used to analyze malicious code and track its origins?
26. Describe the process of email forensics. How do investigators verify the authenticity of an email and trace its origin?
27. How do forensic experts handle encrypted communications, such as VPN traffic or encrypted messaging apps, during an investigation?
28. What are the challenges of forensic analysis in a virtualized environment, and how do investigators extract evidence from virtual machines and containers?
29. What are the ethical considerations in cyber forensics, especially when handling sensitive data or personal information during an investigation?
30. How can forensic analysis be applied to blockchain and cryptocurrency transactions? What forensic tools and techniques are used to trace and analyze cryptocurrency movements?

Atmiya University
Rajkot

Course Code	Course Title
21MCESCC204	**Data Analytics and Visualization (Ap)**

Data Analytics and Visualization:

1. What is the difference between descriptive, diagnostic, predictive, and prescriptive analytics, and how do they relate to data visualization?
2. How do you handle missing data in a dataset? What are some imputation techniques and how do they impact the results of your analysis?
3. What is the significance of data normalization and standardization in data preprocessing, and when should each be applied?
4. How do you perform exploratory data analysis (EDA) using statistical visualizations, and which charts or graphs are most useful in this process?
5. Explain the concept of correlation vs causation in data analytics. How do you visually represent and interpret these relationships in data?
6. How does dimensionality reduction (e.g., PCA) help in visualizing high-dimensional data, and what are the main challenges involved?
7. Describe the role of outliers in data analysis. How do you detect and handle outliers in a dataset, and what impact do they have on your results?
8. What are the advantages and disadvantages of using bar charts, histograms, and boxplots for visualizing distributions of data?
9. What is a heatmap, and how is it used to visualize complex data patterns, such as correlation matrices or cluster analysis results?
10. How do you create a time series analysis and visualize trends, seasonality, and noise in temporal data?
11. What is the difference between a scatter plot and a bubble chart, and in what scenarios would you use one over the other?
12. What are the challenges of visualizing categorical vs continuous variables, and how can techniques like faceting or color encoding help?
13. How can you use geographic maps (e.g., choropleth maps) to visualize spatial data, and what types of data are best suited for this visualization?
14. Explain the concept of a violin plot and when it is preferable to use it over a box plot or histogram.
15. How do you deal with skewed data distributions when performing data analysis, and what visualization techniques can help communicate this skew?
16. What is the role of machine learning in data analytics, and how do you visualize the performance of a predictive model (e.g., using ROC curves, confusion matrices)?
17. How do you interpret and visualize the results of clustering algorithms like K-means or hierarchical clustering?
18. What is a Sankey diagram, and how is it used to visualize flow or relationships between different categories in your dataset?
19. Explain the importance of interactive data visualizations. How can tools like Tableau, Power BI, or D3.js enhance data exploration and decision-making?
20. How do you assess the effectiveness of a data visualization in conveying insights? What metrics or feedback mechanisms can be used for evaluation?

Atmiya University Rajkot

21. How do you handle large datasets for visualization purposes? What are the challenges and techniques for effectively visualizing big data (e.g., data sampling, aggregation)?
22. What are the best practices for designing color schemes in data visualizations to ensure accessibility and avoid misinterpretation?
23. How do you use statistical techniques like hypothesis testing or regression analysis in conjunction with data visualization to communicate your findings?
24. Explain the concept of "dashboard" in business intelligence tools and how data visualization is incorporated into dashboards for decision-making.
25. How do you choose the right visualization tool or library (e.g., Matplotlib, Seaborn, ggplot, Plotly) depending on the data and audience?
26. What are the challenges in visualizing multi-dimensional or multi-variate data, and how can techniques like pair plots or radar charts help?
27. How do you apply color theory in visualizations to improve the readability and effectiveness of your charts?
28. What are the differences between static and dynamic visualizations, and when would you use one over the other in a business context?
29. How do you evaluate and visualize the accuracy of machine learning models, particularly in classification tasks?
30. What is the concept of "storytelling with data," and how can data visualizations be used effectively to communicate complex insights to non-technical stakeholders?

Atmiya University
Rajkot

Faculty of Engineering and Technology
Department of Computer Engineering

Course Code	Course Title
21MCESCC301	**Multicore Architecture**

1. How does multicore architecture differ from traditional single-core processors, and what are the advantages and challenges of multicore systems?
2. What are the key principles of parallel processing in multicore architecture, and how do they enhance performance?
3. How does the operating system handle task scheduling in a multicore environment, and what are the challenges involved?
4. What are the different types of core configurations in multicore processors (e.g., symmetric vs. asymmetric) and their respective advantages?
5. How does cache coherence work in multicore processors, and what are the challenges of maintaining coherence across multiple cores?
6. What are the differences between NUMA (Non-Uniform Memory Access) and UMA (Uniform Memory Access) architectures in multicore systems, and how do they impact performance?
7. How do multicore processors handle synchronization between threads, and what techniques are commonly used to avoid race conditions?
8. How do memory access patterns differ in multicore processors, and how can cache locality be optimized for better performance?
9. How does the concept of thread-level parallelism (TLP) differ from instruction-level parallelism (ILP) in multicore architectures?
10. What are the challenges in optimizing software to take full advantage of multicore processors, and how can programmers manage concurrency and parallelism?
11. How do different parallel programming models (e.g., SIMD, MIMD, SPMD) work in multicore processors, and how are they implemented in hardware and software?
12. What role do vector processors play in multicore architectures, and how do they improve performance for data-parallel applications?
13. How can load balancing across multiple cores be achieved effectively to prevent bottlenecks and underutilization of resources?
14. How does the cache hierarchy work in a multicore processor, and how do modern architectures optimize access to L1, L2, and L3 caches?
15. What are the trade-offs between using more cores versus increasing the clock speed in a multicore processor to boost performance?
16. How does task parallelism differ from data parallelism in multicore systems, and which is more effective for certain types of applications?
17. How can hardware prefetching improve memory access performance in multicore systems, and what are its limitations?
18. How does a multicore processor handle inter-core communication, and what role does message-passing or shared memory play in this process?
19. How does the concept of heterogeneity (e.g., combining CPU and GPU cores) improve the overall performance and efficiency of multicore systems?
20. How do multicore processors deal with power efficiency and thermal management, especially when handling high computational loads across many cores?

Atmiya University Rajkot

21. How do multicore processors handle real-time computing tasks, and what are the challenges in ensuring time-critical applications meet deadlines?
22. How does parallel programming in CUDA for GPUs compare to traditional multicore CPU programming, and what are the key differences in performance characteristics?
23. What are some of the software tools and frameworks available for multicore system development, such as OpenMP, MPI, or Intel Threading Building Blocks?
24. How does virtualization work in multicore systems, and how does it impact resource allocation and performance in a virtualized environment?
25. How do you optimize memory access in a multicore system to avoid bottlenecks, and how does memory contention impact performance?
26. How does speculative execution in multicore processors impact performance and security, particularly with vulnerabilities like Spectre and Meltdown?
27. How does the architecture of ARM-based multicore processors compare to x86-based multicore systems, and what are the implications for mobile and embedded applications?
28. How does parallel I/O management work in multicore systems, and how can bottlenecks in data input/output be minimized?
29. What are the key challenges in scaling applications to effectively utilize a large number of cores, and how can software development approaches address these challenges?
30. How can multicore processors support heterogeneous computing environments, combining different types of cores (e.g., CPUs, GPUs, FPGAs) to optimize overall performance?

Atmiya University
Rajkot

Course Code	Course Title
21MCESDC301	**Deep Learning**

1. How does the backpropagation algorithm work in training deep neural networks, and what are some techniques to optimize its efficiency and convergence?
2. What are the key differences between a feedforward neural network and a convolutional neural network (CNN), and in which scenarios would you use each?
3. How do different types of activation functions (e.g., ReLU, Sigmoid, Tanh) impact the training of deep learning models, and what are the pros and cons of each?
4. How does the vanishing gradient problem affect deep neural networks, and what are the solutions to mitigate this issue, such as using ReLU or batch normalization?
5. What is the role of dropout in regularization, and how does it prevent overfitting in deep neural networks?
6. How does transfer learning work in deep learning, and when would you use a pre-trained model instead of training a model from scratch?
7. How does the architecture of a recurrent neural network (RNN) differ from that of a CNN, and in what types of applications are RNNs particularly useful?
8. What are Long Short-Term Memory (LSTM) networks, and how do they address the vanishing gradient problem in RNNs for sequence modeling?
9. How do attention mechanisms in deep learning models, particularly in transformers, improve performance in tasks such as natural language processing (NLP) and image processing?
10. How do Generative Adversarial Networks (GANs) work, and what are some advanced techniques for training GANs effectively without mode collapse or instability?
11. What are variational autoencoders (VAEs), and how do they differ from standard autoencoders in terms of generating new data?
12. How does the Adam optimizer differ from traditional gradient descent, and why is it often preferred in deep learning for training large models?
13. What is the role of hyperparameter tuning in deep learning, and how can techniques like grid search, random search, or Bayesian optimization help find optimal parameters?
14. How can deep learning models be used for unsupervised learning tasks, and what are the challenges of training deep models without labeled data?
15. How does model interpretability and explainability in deep learning work, and what methods are available to understand the decisions made by complex models?
16. What are the primary challenges in scaling deep learning models to very large datasets, and how can distributed learning techniques address these challenges?
17. How does the concept of residual connections (e.g., in ResNet) help to train very deep networks by preventing degradation and improving gradient flow?
18. How do convolutional layers in CNNs work to detect hierarchical features in images, and how does this differ from the fully connected layers in a standard neural network?
19. What are the challenges in deploying deep learning models on edge devices with limited computational resources, and what techniques can be used to overcome them?

Atmiya University Rajkot

20. How does the concept of curriculum learning help improve deep learning model performance, especially for complex or difficult datasets?
21. How do reinforcement learning and deep learning work together in deep reinforcement learning, and how can this be applied to tasks like game playing or robotic control?
22. What is the significance of the softmax activation function in classification tasks, and how does it contribute to the interpretation of output probabilities in multi-class problems?
23. How does batch normalization improve the training of deep neural networks, and why is it important for reducing internal covariate shift?
24. What are the challenges of training deep learning models on imbalanced datasets, and how can techniques like oversampling, undersampling, or class weighting address these issues?
25. How do graph neural networks (GNNs) extend traditional deep learning models to work with non-Euclidean data like graphs, and what are some applications of GNNs?
26. How do convolutional layers in a U-Net architecture differ from those in a traditional CNN, and why is U-Net particularly effective for semantic segmentation tasks?
27. How does knowledge distillation work in deep learning, and what is the benefit of transferring knowledge from a large model to a smaller model?
28. What are the limitations of current deep learning models, and what are some promising research directions to overcome these limitations, such as few-shot learning or self-supervised learning?
29. How can adversarial attacks influence the performance of deep learning models, and what techniques are being developed to make models more robust against these attacks?
30. How do self-supervised learning models work, and what are the implications of self-supervised learning for tasks that require large amounts of labeled data?

Atmiya University
Rajkot

Course Code	Course Title
21MCESDC302	**IOT Technology & Application (Ad)**

IoT Technology:

1. How does IoT enable edge computing, and what are the benefits and challenges of processing data at the edge instead of in the cloud?
2. What are the key protocols used in IoT communication, such as MQTT, CoAP, and HTTP, and how do they differ in terms of performance and suitability for different applications?
3. How do IoT devices ensure security and privacy, and what are the latest advancements in IoT encryption and authentication techniques?
4. What is the role of 5G networks in the evolution of IoT, and how does their low latency and high bandwidth benefit IoT applications?
5. How do IoT devices handle scalability in terms of connecting a large number of devices without overwhelming the network infrastructure?
6. How does the Internet of Things (IoT) leverage Artificial Intelligence (AI) and Machine Learning (ML) to enable predictive analytics and autonomous decision-making?
7. How do Low Power Wide Area Networks (LPWAN), such as LoRaWAN and NB-IoT, support long-range communication in IoT applications with minimal power consumption?
8. What are the primary challenges in IoT interoperability, and how can standards like Zigbee, Thread, and Bluetooth Low Energy (BLE) help overcome them?
9. What role do IoT gateways play in managing and securing data transmission between IoT devices and the cloud or on-premise systems?
10. How does the concept of Digital Twins in IoT applications enable real-time monitoring and optimization of physical systems or products?
11. What are the key differences between cloud-based and fog-based IoT architectures, and when should each be applied?
12. How do IoT devices and systems manage real-time data processing, and what are the best approaches for handling data from heterogeneous devices?
13. How do IoT protocols handle Quality of Service (QoS) requirements, and what strategies are used to prioritize critical data over less important information?
14. What are the emerging trends in energy harvesting technologies for powering IoT devices in remote or off-grid locations?
15. How do IoT systems use blockchain technology to enhance security, privacy, and data integrity in distributed IoT networks?

IoT Applications:

16. How can IoT be applied in smart cities to optimize traffic management, energy consumption, and public safety, and what are the implementation challenges?

Atmiya University Rajkot

17. What are the key use cases for IoT in the healthcare industry, and how does it enable remote patient monitoring, personalized care, and predictive healthcare?
18. How does IoT contribute to the development of Industry 4.0, particularly in areas like predictive maintenance, supply chain optimization, and factory automation?
19. What role does IoT play in precision agriculture, and how can it help farmers optimize resource usage, monitor crops, and predict weather patterns?
20. How does IoT improve logistics and supply chain management, and what are the challenges of implementing real-time tracking and inventory management?
21. How can IoT technologies be applied to improve environmental monitoring, such as detecting pollution levels, monitoring biodiversity, or tracking climate change?
22. How does IoT enable the concept of smart homes, and what are the potential benefits and risks of automating household devices like lighting, HVAC, and security systems?
23. What are the applications of IoT in the automotive industry, particularly in the areas of autonomous vehicles, fleet management, and vehicle-to-vehicle communication?
24. How does IoT improve energy management in buildings, and what are the key technologies used in smart grids, smart meters, and energy-efficient appliances?
25. How can IoT be leveraged in retail for applications like inventory management, personalized customer experiences, and supply chain transparency?
26. What are the applications of IoT in the manufacturing sector, particularly for real-time monitoring of production lines and asset management?
27. How does IoT enable the development of wearable technologies, and what are the implications for fitness tracking, healthcare, and personal safety?
28. How can IoT systems be applied to smart farming, and what are the challenges of managing remote sensors, automated irrigation, and livestock monitoring?
29. How does IoT impact disaster management and emergency response systems, and what are the key applications for real-time data collection and decision-making?
30. What are the implications of IoT in the defense and security sector, and how can it be used for surveillance, asset tracking, and border security?

Course Code	Course Title
21MCESDC402	**Distributed DBMS(Ad)**

General Concepts & Architecture:

1. How does a distributed database differ from a centralized database, and what are the key advantages and challenges of distributed database systems?
2. What are the main components of a distributed DBMS architecture, and how do they interact to provide transparency and consistency across multiple nodes?
3. How do distributed databases handle data fragmentation, and what are the different types of fragmentation (horizontal, vertical, and mixed)?
4. What is data replication in a distributed DBMS, and what strategies (e.g., full replication, partial replication) can be used to ensure high availability and fault tolerance?
5. How does a distributed DBMS achieve data independence, and what are the challenges in ensuring that the system remains transparent to users and applications?
6. What are the different types of transparency in distributed DBMS (e.g., location transparency, access transparency), and how are they achieved?
7. How is the concept of a distributed query processing handled in DDBMS, and how does the system optimize query execution across distributed nodes?
8. What are the key differences between homogeneous and heterogeneous distributed database systems, and when should each be used?
9. How does a distributed DBMS handle concurrency control in a multi-node environment, and what are some of the challenges in ensuring data consistency?
10. What are the roles of transaction management and coordination in distributed DBMS, and how do protocols like 2-phase commit (2PC) and 3-phase commit (3PC) ensure atomicity and consistency?

Data Consistency & Fault Tolerance:

11. How does the CAP theorem (Consistency, Availability, Partition tolerance) apply to distributed database systems, and what trade-offs are typically made in practice?
12. How is eventual consistency achieved in distributed DBMS, and in what types of applications would it be an acceptable model?
13. What are the challenges in ensuring ACID properties (Atomicity, Consistency, Isolation, Durability) in a distributed environment, and what protocols help enforce these properties?
14. How does a distributed DBMS handle fault tolerance, and what strategies are used to ensure data durability in the event of a node or network failure?
15. What is the role of quorum-based approaches in ensuring consistency across distributed databases, and how do systems like Amazon DynamoDB implement this?

Atmiya University Rajkot

Distributed Query Processing & Optimization:

16. How does query decomposition work in a distributed DBMS, and how is a query distributed across multiple nodes for parallel processing?
17. How do distributed join algorithms (e.g., hash join, merge join) work in distributed databases, and how does the system optimize their execution across nodes?
18. What are the techniques used in distributed query optimization to minimize communication overhead and improve performance in large-scale distributed environments?
19. How does the distributed DBMS ensure efficient data retrieval while maintaining consistency and minimizing latency across geographically distributed nodes?
20. How do distributed database systems handle distributed transactions, and what are the challenges involved in managing long-running transactions across multiple nodes?

Scalability & Performance:

21. How does a distributed DBMS scale horizontally to accommodate an increasing number of users or a growing volume of data, and what are the potential bottlenecks?
22. What is the role of sharding in distributed DBMS, and how does the system decide how to partition data across multiple nodes for efficient storage and retrieval?
23. How does replication impact the performance of a distributed DBMS, and how does the system manage read/write conflicts and synchronization?
24. How are consistency levels managed across distributed databases in NoSQL systems like Cassandra or MongoDB, and how do they differ from traditional relational DDBMS?
25. How do distributed database systems handle the trade-off between consistency and latency, especially in applications requiring real-time data processing?

Security & Integrity:

26. How do distributed DBMS ensure data security across multiple nodes, and what encryption techniques are employed to secure data both in transit and at rest?
27. How is access control managed in a distributed database environment, and what are the challenges in maintaining security across geographically dispersed nodes?
28. How does a distributed DBMS handle auditing and logging to ensure that data access and transactions are traceable and compliant with regulatory requirements?
29. How does the system maintain data integrity across different nodes in the presence of network partitions or node failures?
30. How can distributed database systems detect and recover from malicious attacks, such as SQL injection or data tampering, in a distributed environment?

Course Code	Course Title
21MCESDC402	**Software Engineering Methodologies(Ad)**

General Methodologies and Frameworks:

1. How does Agile software development differ from traditional Waterfall methodologies, and in which scenarios is one preferred over the other?
2. What are the key principles of the Scrum framework, and how does it facilitate iterative development and continuous feedback?
3. How does the Kanban methodology work in software development, and how does it differ from Scrum in terms of workflow management and delivery?
4. What is the role of a Product Backlog in Scrum, and how does it differ from a typical project management task list?
5. How do Extreme Programming (XP) practices, such as pair programming and test-driven development (TDD), influence software quality and team collaboration?
6. How do Lean software development principles optimize efficiency and reduce waste in the software development lifecycle?
7. What are the key benefits of adopting a DevOps methodology, and how does it integrate software development with IT operations for continuous delivery?
8. How does the Spiral model combine iterative development and risk management, and in which types of projects is it most suitable?
9. How does the V-Model (Verification and Validation) differ from the Waterfall model, and how does it emphasize the relationship between development and testing?
10. What is the purpose of the Unified Process (UP), and how do its phases, such as inception, elaboration, construction, and transition, contribute to successful software development?

Advanced Topics in Agile Methodologies:

11. How does the concept of a Minimum Viable Product (MVP) contribute to Agile development, and how does it help in validating assumptions and reducing project risks?
12. How do Agile methodologies handle project scope creep, and what tools or techniques are used to ensure that the project remains within scope?
13. What are the challenges of scaling Agile methodologies in large organizations, and what frameworks, like SAFe or Spotify, address these challenges?
14. How does the concept of Continuous Integration/Continuous Deployment (CI/CD) fit within the Agile framework, and how does it improve code quality and delivery speed?
15. What are the challenges in Agile project estimation, and how can techniques like story points, velocity, and burn-down charts help manage expectations?
16. How do Agile teams manage dependencies between different components or teams in large projects, and what tools help streamline communication and coordination?

Atmiya University Rajkot

Software Development Lifecycle (SDLC):

17. What is the importance of the Software Development Lifecycle (SDLC), and how do different SDLC models (Waterfall, Agile, V-Model, Spiral) impact project planning, execution, and maintenance?
18. How does the choice of SDLC model influence risk management in software development, and which model is best suited for projects with high uncertainty?
19. How do modern SDLCs address the challenges of rapidly changing requirements, and what practices ensure that these changes can be effectively incorporated?
20. How do Agile and DevOps methodologies interact in a Continuous Delivery pipeline, and what is the role of automation in these environments?

Quality Assurance and Testing:

21. How do Software Engineering Methodologies address testing throughout the development lifecycle, and what are the advantages of integrating testing early (shift-left testing)?
22. What is the significance of Test-Driven Development (TDD) in Agile methodologies, and how does it improve the reliability and maintainability of software?
23. How do acceptance criteria and user stories drive the testing process in Agile projects, and how do they ensure that the software meets user expectations?
24. What are the challenges of testing in distributed systems, and how do Agile methodologies accommodate testing in such environments?
25. How does Continuous Testing support DevOps and Agile, and what are the tools that help automate and monitor testing throughout the development cycle?

Risk Management and Project Management:

26. How does risk management play a role in Agile methodologies, and what techniques are used to identify, assess, and mitigate risks in Agile projects?
27. What are the benefits and challenges of implementing a hybrid methodology (e.g., Agile-Waterfall) in complex, large-scale projects?
28. How do software engineering methodologies address the challenge of managing project timelines and budgets in projects with shifting requirements and uncertainty?
29. How do Agile methodologies handle non-functional requirements (such as performance, security, and scalability), and what are the best practices for incorporating these into the development process?
30. How does stakeholder management differ across various software engineering methodologies, and how can methodologies ensure that stakeholders needs and expectations are met throughout the project lifecycle?

Atmiya University
Rajkot

Faculty of Engineering and Technology
Department of Computer Engineering

Course Code	Course Title
21MCESID101	**Basic of Transportation Engineering**

1. What are the key components of a transportation system, and how do they interact with each other?
2. Explain the difference between fixed-route and demand-responsive transportation systems.
3. What is the purpose of traffic flow theory, and what are its fundamental principles?
4. Describe the various types of traffic control devices and their role in managing traffic.
5. How does the concept of Level of Service (LOS) apply to transportation systems, and how is it determined?
6. What factors contribute to the capacity of a road or highway, and how is it calculated?
7. How do traffic signal timing and coordination impact traffic flow and congestion?
8. Explain the difference between horizontal and vertical alignment in roadway design.
9. How do pavement types (e.g., flexible vs. rigid) affect the design and performance of highways?
10. What is the significance of geometric design in transportation engineering, and what are the basic design elements?
11. Discuss the role of environmental considerations in transportation planning and design.
12. How does traffic safety engineering influence the design and operation of transportation systems?
13. Explain the concept of sustainable transportation and its importance in modern transportation planning.
14. What is the significance of intersection design, and how are different types of intersections (e.g., signalized, roundabouts) evaluated?
15. Describe the concept of road classification and how it affects the design of roads and highways.
16. How does a traffic impact study assess the effect of a new development or construction project on existing transportation systems?
17. What are the key principles of transportation demand management (TDM), and how do they help reduce congestion?
18. Discuss the various methods of traffic volume measurement, such as manual counting, automated counters, and video-based systems.
19. Explain the difference between the design speed and operating speed of a roadway and how they influence road design.
20. What is the role of transportation modeling in planning and decision-making? Describe some common modeling techniques.
21. How are public transportation systems planned and designed to maximize efficiency and accessibility?
22. What is the significance of the Highway Capacity Manual (HCM) in transportation engineering, and how is it used?
23. Discuss the role of transportation economics in the decision-making process for infrastructure investments.

Atmiya University Rajkot

24. How do transportation engineers assess the environmental impact of a transportation project, and what tools are used in this process?
25. What are the key considerations when designing for non-motorized transportation modes, such as pedestrians and cyclists?
26. How does intelligent transportation systems (ITS) improve traffic management and reduce congestion?
27. What is the importance of maintaining pavement condition, and how is pavement management used in transportation engineering?
28. Explain the concept of traffic accident analysis and how it is used to improve roadway safety.
29. What are the key issues involved in freight transportation and logistics, and how do transportation engineers address them?
30. How is the concept of transportation equity applied in planning and designing transportation systems to serve diverse communities?

Atmiya University
Rajkot

Faculty of Engineering and Technology
Department of Computer Engineering

Course Code	Course Title
21MCESID102	**Energy Technology**

1. What are the key differences between renewable and non-renewable energy sources, and what are their respective advantages and challenges?
2. How do photovoltaic cells convert solar energy into electricity, and what are the latest advancements in solar panel efficiency?
3. Explain the working principle of a wind turbine and the factors that affect its energy production.
4. What is the concept of smart grids, and how do they integrate renewable energy sources with traditional energy systems?
5. How does energy storage technology, such as lithium-ion batteries, improve the efficiency and reliability of renewable energy systems?
6. Discuss the concept of hydrogen energy as a clean fuel alternative and the challenges in its production, storage, and distribution.
7. What are the environmental impacts of hydraulic fracturing (fracking) for natural gas extraction, and how are they mitigated?
8. Describe the process and challenges of carbon capture and storage (CCS) technology in reducing greenhouse gas emissions.
9. How does geothermal energy work, and what are the limitations and potential of geothermal power generation?
10. What are the latest developments in nuclear fusion technology, and how could it revolutionize energy production?
11. How do concentrated solar power (CSP) systems differ from traditional photovoltaic systems in terms of efficiency and application?
12. Explain the concept of energy efficiency and how advanced materials, such as phase change materials, are used to improve energy efficiency in buildings.
13. What role does bioenergy play in the global energy transition, and how is biomass converted into usable energy?
14. How does the concept of "energy as a service" work, and what are the benefits and challenges associated with it?
15. What are the economic, technological, and environmental challenges associated with the widespread adoption of electric vehicles?
16. How does the concept of demand response (DR) technology help balance energy supply and demand in modern power grids?
17. What are the key technologies involved in offshore wind energy generation, and what challenges does the sector face in terms of efficiency and cost?
18. Explain the concept of microgrids and how they contribute to energy resilience and decentralization.
19. How do advanced nuclear reactor designs, such as small modular reactors (SMRs), compare to traditional nuclear power plants?
20. What are the advancements in tidal and wave energy technologies, and how feasible are they as large-scale energy sources?
21. How does waste-to-energy technology work, and what are the environmental implications of converting municipal waste into usable power?
22. What are the advantages and limitations of using concentrated solar thermal (CST) technology for large-scale energy production?

Atmiya University Rajkot

23. How do energy-efficient building technologies, such as passive design and net-zero energy homes, contribute to sustainable development?
24. How do combined heat and power (CHP) systems increase energy efficiency in industrial and residential settings?
25. What role does artificial intelligence (AI) and machine learning play in optimizing energy generation, distribution, and consumption?
26. Discuss the potential of biogas as an alternative energy source and the challenges associated with its widespread use.
27. How does the process of anaerobic digestion work in converting organic waste into energy, and what are its benefits?
28. What are the environmental benefits and drawbacks of using nuclear power as a clean energy source compared to renewable energy options?
29. Explain the process of energy decentralization and how it contributes to more resilient energy systems, especially in remote or disaster-prone areas.
30. How do carbon-neutral fuels (e.g., synthetic fuels or biofuels) contribute to decarbonizing the transportation sector, and what technological advancements are needed to make them commercially viable?

Atmiya University
Rajkot

Faculty of Engineering and Technology
Department of Computer Engineering

Course Code	Course Title
21MCESID103	**Alternate Energy Sources**

1. What are the key differences between first-generation and second-generation biofuels, and how do they impact sustainability?
2. Explain the concept of algae-based biofuels and their potential as a sustainable alternative to traditional fuels.
3. How does tidal energy work, and what are the main challenges in harnessing its power on a large scale?
4. What is the principle behind wind power generation, and how do the latest innovations in turbine design improve efficiency?
5. How do concentrating solar power (CSP) systems differ from photovoltaic solar panels in terms of energy production and application?
6. Discuss the role of geothermal energy in the energy transition and the challenges associated with deep geothermal resources.
7. What are the advantages and limitations of hydrogen as an alternative energy carrier, particularly in transportation and industry?
8. Explain the process of hydrothermal liquefaction (HTL) and its potential to convert biomass into liquid fuels.
9. How do fuel cells work, and what are the technological and economic challenges associated with their widespread adoption?
10. What is the concept of green hydrogen, and how does it differ from conventional hydrogen production methods?
11. How does the concept of "solar thermal energy" work, and in what applications is it most effective compared to photovoltaic systems?
12. What are the environmental impacts of large-scale bioenergy production, and how can they be mitigated through sustainable practices?
13. How does the production of biochar contribute to carbon sequestration, and what are its potential uses in energy production?
14. Explain the challenges of integrating renewable energy sources like solar and wind into the existing power grid, particularly in terms of intermittency.
15. What is the concept of power-to-gas (P2G) technology, and how does it enable the storage and transportation of renewable energy in the form of hydrogen or synthetic methane?
16. How does the use of biomass for heat and power generation compare to other forms of renewable energy in terms of efficiency and environmental impact?
17. What are the prospects of ocean thermal energy conversion (OTEC) as a viable alternative energy source?
18. Discuss the potential and challenges of using piezoelectric technology for harvesting energy from mechanical vibrations or movements.
19. How does the principle of energy harvesting apply to small-scale applications like wearable devices or remote sensors?
20. What are the differences between onshore and offshore wind farms, and what unique challenges does offshore wind energy face?

Atmiya University Rajkot

21. What is the role of hybrid systems that combine renewable energy sources like solar, wind, and battery storage, and how do they increase system reliability?
22. How does wave energy work, and what are the technological challenges in harnessing energy from ocean waves?
23. How can the use of thermoelectric materials contribute to waste heat recovery and energy efficiency?
24. Discuss the potential of using high-altitude wind power (e.g., airborne wind turbines or kites) to generate renewable energy.
25. How does the concept of grid parity apply to renewable energy technologies, and what factors are influencing the move toward cost competitiveness with traditional energy sources?
26. What is the role of advanced materials in improving the efficiency of renewable energy systems, such as perovskite solar cells or nanomaterials for energy storage?
27. How does the process of algae cultivation for biofuels impact water use, land use, and food production, and what solutions exist to reduce these conflicts?
28. What are the technological advancements needed to improve the efficiency and scalability of energy storage systems for renewable energy sources?
29. What is the potential of thermochemical conversion processes like pyrolysis or gasification for generating renewable fuels from biomass?
30. How can artificial intelligence (AI) and machine learning be used to optimize the performance and integration of alternative energy sources into the grid?

Atmiya University
Rajkot

Faculty of Engineering and Technology
Department of Computer Engineering

Course Code	Course Title
21MCESID104	**Wireless Communication Standards**

1. What are the key differences between the 4G and 5G wireless communication standards in terms of speed, latency, and network architecture?
2. Explain the concept of Frequency Division Duplex (FDD) and Time Division Duplex (TDD) in wireless communication. How are they used in 4G and 5G systems?
3. What is the role of Orthogonal Frequency Division Multiplexing (OFDM) in modern wireless communication standards, and how does it improve spectrum efficiency?
4. How do the concepts of Massive MIMO (Multiple Input Multiple Output) and beamforming enhance 5G network performance?
5. Explain the architecture of 5G and how it enables support for Ultra-Reliable Low Latency Communications (URLLC) and enhanced mobile broadband (eMBB).
6. What is the significance of Millimeter Wave (mmWave) technology in 5G, and what challenges does it present in terms of signal propagation and coverage?
7. How does carrier aggregation work in LTE and 5G to improve data throughput, and what are its limitations?
8. Describe the role of Network Slicing in 5G networks and its potential applications in vertical industries like healthcare and autonomous vehicles.
9. What are the key features of IEEE 802.11ax (Wi-Fi 6), and how do they compare to previous Wi-Fi standards like 802.11ac?
10. How does the 802.11ad (WiGig) standard differ from traditional Wi-Fi in terms of frequency bands and data rates, and what are its applications?
11. What are the differences between Bluetooth Classic, Bluetooth Low Energy (BLE), and Bluetooth 5, and how do these technologies support various use cases?
12. How do the concepts of Short Range Communication (SRC) and Ultra-Wideband (UWB) technology impact indoor positioning systems and IoT applications?
13. Explain the role of Long Range Wide Area Network (LoRaWAN) in IoT, and how does it compare to other LPWAN technologies like Sigfox and NB-IoT?
14. What are the key advancements in the Zigbee protocol, and how does it compare to Bluetooth and Wi-Fi in terms of power consumption and range?
15. How does Narrowband IoT (NB-IoT) facilitate low-power, wide-area communications for IoT devices, and what are its limitations?
16. What is the role of Software-Defined Networking (SDN) and Network Function Virtualization (NFV) in enabling flexibility and scalability in wireless networks?
17. How does the 5G NR (New Radio) standard support both standalone and non-standalone deployments, and what are the advantages of each?
18. What are the challenges in implementing the Internet of Things (IoT) using existing wireless communication standards, and how are emerging standards like 5G addressing these challenges?
19. How does the 802.15.4 standard underpin other wireless communication protocols such as Zigbee and Thread, and what are its limitations in IoT applications?

20. Describe the concept of the "cloud radio access network" (C-RAN) and its significance in the context of 5G and future wireless networks.
21. What is the role of millimeter-wave frequencies in future wireless communication systems, and what techniques are being developed to overcome their propagation challenges?
22. How does 5G enable the concept of edge computing, and what is its impact on latency, network efficiency, and application performance?
23. What is the significance of the unlicensed spectrum in wireless communication standards, and how do technologies like Wi-Fi and LTE-U utilize it?
24. How do the 5G standards use Dynamic Spectrum Sharing (DSS) to enable a smooth transition between 4G and 5G networks?
25. What are the benefits of using full-duplex communication in wireless networks, and how does this differ from the half-duplex communication used in earlier standards?
26. Explain how the LTE Advanced Pro standard incorporates features like Carrier Aggregation and MIMO to support high-speed data services.
27. How does the IEEE 802.22 standard for wireless regional area networks (WRAN) enable broadband access in rural and underserved areas?
28. What role do advanced coding schemes and modulation techniques, such as LDPC and QAM, play in modern wireless communication standards like 5G?
29. How do beamforming and MIMO technologies work together in wireless communication to improve coverage and data rates in dense urban environments?
30. Discuss the potential applications and limitations of Visible Light Communication (VLC) and how it compares to traditional radio frequency (RF) communication.

Atmiya University
Rajkot

Faculty of Engineering and Technology
Department of Computer Engineering

Course Code	Course Title
21MCESID201	Road Traffic and Accident

1. What are the primary causes of road traffic accidents worldwide, and how do they vary across different regions?
2. How does road infrastructure impact the frequency and severity of traffic accidents?
3. What role do road signs, signals, and markings play in preventing accidents?
4. How do driver behaviors such as speeding, distracted driving, and fatigue contribute to accidents?
5. How effective are traffic cameras in reducing road accidents and improving traffic safety?
6. What are the environmental factors (e.g., weather, lighting, road conditions) that influence traffic accidents?
7. How do vehicle safety features (e.g., airbags, anti-lock braking systems) affect the outcome of road traffic accidents?
8. What is the relationship between alcohol consumption and road traffic accidents, and how can it be mitigated?
9. How does the use of mobile phones while driving contribute to accidents, and what measures can reduce this risk?
10. What role does driver education play in reducing the number of road traffic accidents?
11. How do accident rates differ between urban and rural areas, and what are the contributing factors?
12. What are the common injuries sustained in road traffic accidents, and how can they be prevented?
13. How do traffic laws and enforcement impact the occurrence of road traffic accidents?
14. What technological advancements are being implemented to prevent road accidents (e.g., autonomous vehicles, advanced driver-assistance systems)?
15. How can traffic accident data be used to improve road safety policies and practices?
16. What are the psychological effects of being involved in a road traffic accident on both victims and drivers?
17. How do traffic congestion and bottlenecks contribute to accidents, and what can be done to alleviate these issues?
18. What are the challenges in collecting accurate data on traffic accidents and their causes?
19. How do road traffic accidents impact the economy, both in terms of direct costs and broader societal effects?
20. How can governments and local authorities collaborate with private organizations to improve road safety?
21. How do speed limits affect the rate of accidents, and what factors should be considered when setting speed limits?
22. What is the role of pedestrian infrastructure in preventing traffic accidents involving pedestrians?

23. How do cycling and motorcycle accidents differ from car accidents, and what measures can improve safety for these groups?
24. How does fatigue influence driver performance, and what are effective ways to combat drowsy driving?
25. What are the ethical considerations in the use of automated traffic enforcement systems (e.g., speed cameras, red-light cameras)?
26. How can emergency response systems be improved to reduce fatalities and severe injuries after traffic accidents?
27. What strategies can be employed to improve the behavior of drivers in high-risk groups (e.g., young drivers, elderly drivers)?
28. How does the integration of smart city technology enhance road traffic safety?
29. What role do insurance companies play in reducing road traffic accidents, and how can they contribute to better road safety practices?
30. How does the legal system handle claims and lawsuits arising from road traffic accidents, and what improvements can be made to ensure fair outcomes?

Atmiya University
Rajkot

Faculty of Engineering and Technology
Department of Computer Engineering

Course Code	Course Title
21MCESID202	Renewable Energy Sources

1. What are the main types of renewable energy sources, and how do they differ in terms of technology and application?
2. How does the efficiency of solar panels compare to other renewable energy sources like wind and hydropower?
3. What are the environmental benefits of renewable energy over fossil fuels in terms of carbon emissions?
4. How do the costs of renewable energy technologies, like solar, wind, and hydropower, compare to traditional fossil fuel-based energy production?
5. What are the key challenges in integrating renewable energy into existing energy grids?
6. How can energy storage systems (e.g., batteries, pumped storage) help address the intermittent nature of renewable energy?
7. What role do government incentives and policies play in the development and adoption of renewable energy technologies?
8. How does offshore wind energy compare to onshore wind in terms of efficiency and cost-effectiveness?
9. What are the primary challenges in scaling up solar energy production, particularly in regions with limited sunlight?
10. How can bioenergy be produced sustainably, and what are the potential environmental impacts of biofuels?
11. What are the advantages and disadvantages of using geothermal energy as a renewable energy source?
12. How do solar photovoltaic systems work, and what are the most promising technological advancements in solar energy?
13. What is the potential of tidal and wave energy as renewable energy sources, and what challenges do they face in terms of commercialization?
14. How does wind energy work, and what are the technological advancements being made to improve the efficiency of wind turbines?
15. How does hydropower generate electricity, and what are the environmental impacts associated with large-scale hydropower projects?
16. How can hybrid energy systems (e.g., combining solar with wind or battery storage) improve the reliability and stability of renewable energy systems?
17. What are the social and economic benefits of transitioning to renewable energy sources in developing countries?
18. How does the efficiency of renewable energy technologies vary based on geographical location (e.g., wind patterns, solar radiation)?
19. What role does green hydrogen play in the future of renewable energy, and how is it produced from renewable sources?
20. How do microgrids powered by renewable energy contribute to energy resilience and security in remote or disaster-prone areas?

21. What are the technological barriers to achieving 100% renewable energy integration in national grids?
22. How do renewable energy sources contribute to the decarbonization of the transportation sector?
23. What are the potential risks associated with large-scale adoption of renewable energy technologies, such as land use changes and resource depletion?
24. How do renewable energy policies differ across countries, and what can be learned from nations with high renewable energy adoption rates?
25. What role do renewable energy cooperatives and community-based projects play in accelerating the energy transition?
26. How do advances in artificial intelligence and machine learning improve the management and forecasting of renewable energy production?
27. What is the role of carbon capture and storage (CCS) in complementing renewable energy technologies in reducing overall greenhouse gas emissions?
28. What are the economic challenges of phasing out fossil fuels in favor of renewable energy, particularly in regions dependent on coal, oil, or natural gas?
29. How do the environmental and social impacts of renewable energy sources, such as wind farms and solar arrays, compare to those of fossil fuels?
30. What are the latest innovations in renewable energy research, and how might these developments shape the future energy landscape?

Atmiya University
Rajkot

Faculty of Engineering and Technology
Department of Computer Engineering

Course Code	Course Title
21MCESID203	**Quality Engineering**

1. How do Six Sigma methodologies integrate into the overall quality engineering process, and what are their key principles?
2. What are the differences between quality assurance (QA) and quality control (QC), and how do they complement each other in a production environment?
3. How can root cause analysis (RCA) techniques like the 5 Whys and Fishbone Diagram help in identifying and eliminating defects?
4. What is the role of Statistical Process Control (SPC) in quality engineering, and how can it be used to monitor and improve production processes?
5. How do design of experiments (DOE) methods contribute to optimizing product design and manufacturing processes?
6. What is the significance of Failure Mode and Effects Analysis (FMEA) in identifying potential risks and improving product reliability?
7. How does Total Quality Management (TQM) differ from other quality management systems, and what are its benefits in a manufacturing environment?
8. What is the role of Lean Manufacturing in quality engineering, and how does it help eliminate waste and improve process efficiency?
9. How does process capability analysis (Cp, Cpk) assess the ability of a process to meet product specifications?
10. How can predictive analytics and machine learning models be applied in quality engineering for defect prediction and process optimization?
11. How do you define and measure quality from both the customer and producer perspectives in quality engineering?
12. What are the challenges of implementing quality standards like ISO 9001 in a global supply chain, and how can they be overcome?
13. How can quality engineers use benchmarking techniques to compare product or process performance against industry best practices?
14. How does the application of risk management techniques, such as fault tree analysis, help improve product quality and safety?
15. What are the key differences between acceptance sampling and continuous sampling, and when should each be used?
16. How do quality engineers manage and analyze data from different sources (e.g., sensors, customer feedback, and production metrics) to ensure product quality?
17. What are the steps in conducting an effective audit of a quality management system, and how do you ensure continuous improvement?
18. How do you integrate sustainability and environmental factors into quality engineering practices, especially in the context of product life cycles?
19. What are the common tools and software used in quality engineering for managing and analyzing quality data (e.g., Minitab, JMP)?
20. How can quality engineers ensure compliance with regulatory standards, such as FDA regulations in the medical device industry, or RoHS in electronics?
21. What is the role of reliability engineering in quality engineering, and how can reliability testing (e.g., accelerated life testing) be used to predict product longevity?

Atmiya University Rajkot

22. How does quality engineering apply to software development, and what are the key challenges in maintaining software quality?
23. How can advanced technologies, such as artificial intelligence and the Internet of Things (IoT), enhance real-time quality monitoring and process control?
24. What is the importance of Continuous Improvement (CI) in quality engineering, and how can engineers ensure that improvements are sustained over time?
25. How can quality engineers assess and improve the human factors and ergonomics in product design and manufacturing processes?
26. How does design for manufacturability (DFM) contribute to better quality and cost efficiency in product development?
27. What is the role of quality engineering in new product introduction (NPI), and how does it ensure the product meets the required specifications?
28. How can you measure and improve supplier quality performance, and what tools can be used to evaluate suppliers effectively?
29. How can quality engineering principles be applied to service industries, and what are the challenges in measuring service quality?
30. How do quality engineers use process mapping and flowcharting techniques to identify inefficiencies and areas for improvement in a production system?

Atmiya University
Rajkot

Course Code	Course Title
21MCESID204	**Arduino & Raspberry Pi Programming**

Arduino Programming:

1. How do you handle real-time data processing on an Arduino, and what are the limitations due to its processing power?
2. How does Arduino handle interrupts, and how can they be effectively used in time-sensitive applications?
3. What is the significance of PWM (Pulse Width Modulation) in Arduino, and how do you implement it for motor control or LED dimming?
4. How do you interface multiple sensors with Arduino, and what are the considerations in terms of I2C and SPI communication protocols?
5. How do you optimize memory usage in an Arduino program, especially when working with large arrays or complex algorithms?
6. What are the best practices for using external libraries in Arduino sketches to avoid conflicts or excessive resource usage?
7. How does the Arduino handle serial communication, and what are the limitations in terms of baud rate and data integrity?
8. How can you implement multitasking on Arduino using techniques like state machines or using timers to simulate concurrent tasks?
9. What is the role of the Arduino Bootloader, and how can you modify or upgrade it to change the programming behavior of the board?
10. How do you implement a wireless communication system (e.g., using Bluetooth or Wi-Fi) with Arduino for IoT applications?
11. How can you efficiently handle power management in battery-powered Arduino applications, and what are some strategies to minimize power consumption?
12. What are the differences between different Arduino models (e.g., Uno, Mega, Nano), and how do you choose the right board for a specific application?
13. How can you use Arduino to read analog sensors with higher precision, and what are the limitations of the Arduino ADC (Analog-to-Digital Converter)?
14. How do you implement custom communication protocols in Arduino for specialized hardware that doesn't support standard interfaces like I2C or SPI?
15. How can you use Arduino to interact with motors and servos, and how do you manage position control for robotic arms or automated systems?

Raspberry Pi Programming:

16. How do you set up and configure Raspberry Pi for remote access, and what are the security concerns related to remote login (e.g., SSH)?

Atmiya University Rajkot

17. How do you interface Raspberry Pi with external hardware (e.g., sensors, motors, displays) using GPIO pins, and what software libraries do you use?
18. What are the advantages of using a Raspberry Pi for machine learning applications, and how do you integrate libraries like TensorFlow or OpenCV?
19. How can you optimize the performance of a Raspberry Pi when running resource-intensive applications like video streaming or data processing?
20. How does Raspberry Pi handle GPIO pin control, and how can you use PWM signals for controlling devices like LEDs or motors?
21. How do you manage file systems and storage on Raspberry Pi, particularly when using an SD card or USB devices for large data storage?
22. How can you use Raspberry Pi for home automation, integrating it with devices like smart lights, thermostats, or security cameras?
23. How can you implement a web server on a Raspberry Pi using frameworks like Flask or Node.js, and how can you use it for IoT projects?
24. What are the steps to run and manage background processes on Raspberry Pi, and how do you implement process scheduling using cron jobs?
25. How can you use Raspberry Pi to handle real-time data from sensors, and how do you implement time-sensitive processing with Python or C++?
26. How do you interface Raspberry Pi with other computers or microcontrollers via protocols such as MQTT, HTTP, or WebSocket for IoT applications?
27. How can you set up a Raspberry Pi as a media center, and what software and configuration are required for media streaming and management?
28. How can you optimize the network performance of Raspberry Pi when using it for data-intensive applications like video surveillance or data logging?
29. How can you use Raspberry Pi for robotics, and what are the key libraries and tools available to control motors, sensors, and camera systems?
30. How can you secure a Raspberry Pi from potential cyber threats, particularly when connected to the internet for remote access or IoT applications?

Atmiya University
Rajkot

Course Code	Course Title
21PHSMA102	**Numerical Methods & Discrete Mathematics for Computer Engineering**

Numerical Methods

1. What is the difference between direct and iterative methods for solving linear systems of equations? Provide examples of each.
2. Explain the method of Gaussian elimination and its computational complexity for solving a system of linear equations.
3. How does the Newton-Raphson method work for solving nonlinear equations? What are its convergence criteria?
4. What are the advantages and disadvantages of the bisection method over other root-finding methods like secant or Newton-Raphson?
5. How does the Runge-Kutta method improve upon the Euler method for solving ordinary differential equations?
6. What is the concept of numerical stability in algorithms? How can you ensure that an algorithm is numerically stable?
7. Explain the method of finite differences for approximating derivatives, and give examples of forward, backward, and central difference formulas.
8. What is the Lagrange interpolation polynomial, and how can it be used to approximate a function given a set of data points?
9. How does Simpsons Rule differ from the Trapezoidal Rule in numerical integration, and which one provides better accuracy?
10. Explain the process of solving a system of nonlinear equations using the method of successive substitution.
11. What is the importance of condition number in numerical analysis, and how does it affect the accuracy of the solution to a linear system?
12. How can you solve large sparse systems of linear equations using iterative methods such as the Jacobi or Gauss-Seidel method?
13. Describe the process of numerical differentiation and the errors involved when approximating derivatives using finite differences.
14. What is the purpose of matrix factorization techniques like LU decomposition in solving systems of linear equations?
15. How does the method of least squares help in curve fitting, and what is its application in regression analysis?
16. Explain the concept of eigenvalues and eigenvectors, and how the power method is used to approximate the dominant eigenvalue of a matrix.
17. How do the methods of interpolation and extrapolation differ, and what are their applications in numerical analysis?
18. What is the role of Newtons divided differences in polynomial interpolation, and how does it compare to Lagrange interpolation?

Atmiya University Rajkot

Discrete Mathematics

19. What is a graph, and how does graph theory apply to computer engineering, particularly in network design and algorithms?
20. Define the concept of a bipartite graph. How do you determine if a graph is bipartite using algorithms such as BFS or DFS?
21. Explain the difference between directed and undirected graphs. How are these types of graphs used in computer science applications like data structures and web page linking?
22. What is the principle of mathematical induction, and how is it used to prove properties about algorithms and data structures?
23. Explain the concept of Boolean algebra and its significance in digital logic design. How do operations like AND, OR, and NOT work?
24. What is a recurrence relation, and how can you solve it using methods like iteration, substitution, or the master theorem?
25. Define the terms sets and relations in discrete mathematics. How are they used in database theory and query optimization?
26. What is the pigeonhole principle, and how can it be applied in proving various combinatorial problems?
27. Describe the difference between permutations and combinations. How are they applied in algorithm design and analysis?
28. What is the significance of Big-O, Big- , and Big- notation in analyzing the time complexity of algorithms?
29. How does the Chinese Remainder Theorem help in solving systems of congruences, and what is its application in cryptography?
30. What is a finite state machine (FSM), and how does it model computational processes such as lexical analysis in compilers?

Atmiya University
Rajkot

Atmiya University
Faculty of Engineering & Technology
Department of Mechanical Engineering
M.Tech. Mechanical Engineering

Advanced Casting Technology - QUESTION BANK

UNIT 1 **Introduction & Historical Development**

1. What is casting, and how would you define it in the context of material processing?
2. Can you explain the basic principles behind the casting process?
3. What are the key advantages of using casting as a manufacturing method?
4. How does casting differ from other metalworking processes such as forging and machining?
5. When and where did the practice of casting first originate in human history?
6. What were some of the earliest materials and techniques used in casting?
7. How did casting evolve over time, and what were the significant developments in different historical periods?
8. Who were some of the key figures or civilizations that contributed to the historical development of casting techniques?
9. How did the Industrial Revolution impact the casting industry, and what technological advancements were introduced during this period?
10. Can you discuss the role of casting in ancient cultures, such as ancient China, Greece, and Rome?
11. What were some challenges faced by early casting processes, and how were they addressed over time?
12. How did the Renaissance period influence the art and science of casting?
13. In what ways did the introduction of new materials and alloys impact the casting industry?
14. What role did the development of modern foundry techniques play in the industrialization of metal production?
15. How has casting technology continued to evolve in the 20th and 21st centuries?
16. Are there any notable innovations or breakthroughs in casting technology in recent decades?
17. How does investment casting differ from sand casting, and what are the advantages of each method?
18. Can you discuss the environmental impact of casting processes and any efforts to make them more sustainable?
19. How has the globalization of manufacturing affected the casting industry?
20. What are the current trends and future prospects for the casting industry?

UNIT 2 **Pattern, Mould and Core Design**

21. What is the role of a pattern in the casting process, and how does it influence the final product?
22. Can you explain the significance of pattern material selection in pattern design?
23. What are the key considerations in designing a pattern for a complex casting shape?
24. How does the size and shape of a pattern affect the casting process and the final product?
25. What are the common materials used in pattern construction, and how does their selection impact the casting process?
26. Can you discuss the importance of draft in pattern design and its impact on mold release?
27. What is the purpose of a mold in casting, and how does its design contribute to the overall process?
28. How do you determine the gating and risering system in mold design to ensure proper metal flow and solidification?
29. What are the different types of molding materials used in foundries, and how do they influence mold design?
30. What considerations are essential in designing a mold for high-temperature applications or specialized casting processes?
31. How does the design of cores contribute to the creation of internal features in a casting?
32. Can you explain the concept of core prints and their role in mold assembly?
33. What challenges are associated with designing molds for large-scale castings, and how are they addressed?
34. How does the design of a mold impact the overall casting cycle time and efficiency?
35. Can you discuss the importance of venting and cooling in mold design for preventing defects in the casting?
36. What role does computer-aided design (CAD) play in modern pattern, mold, and core design?
37. How has additive manufacturing and 3D printing influenced the design of patterns, molds, and cores in the casting industry?
38. Can you explain the concept of match plates in pattern and mold design and their advantages?
39. What are the considerations for designing molds and cores for different casting materials, such as ferrous and non-ferrous alloys?
40. How has sustainability been incorporated into pattern, mold, and core design practices in recent years?

UNIT 3 **Risering, Gating and Melting Practice**

Risering:

41. What is the purpose of risers in the casting process, and how do they contribute to reducing defects?
42. Can you explain the difference between open and blind risers and when each is used?

Atmiya University Rajkot

43. How does the size and shape of a riser affect its effectiveness in preventing shrinkage defects?
44. What factors influence the selection of the location for risers on a casting?
45. How do you determine the proper size of a riser for a specific casting job?
46. Can you discuss the concept of feeding distance and its importance in risering design?
47. What are the challenges associated with designing risers for thin-walled sections in a casting?

    Gating:
48. What is the purpose of the gating system in the casting process, and how does it impact metal flow?
49. How do you design a gating system to ensure proper filling of the mold cavity?
50. Can you explain the role of ingates and runners in the gating design?
51. What factors influence the selection of the gating system based on the casting material?
52. How does the design of the gating system impact the overall efficiency of the casting process?
53. Can you discuss the considerations for designing a multi-gate system in casting?

    Melting Practice:
54. What are the common methods used for melting metals in the foundry industry?
55. How does the melting process differ for ferrous and non-ferrous alloys?
56. What factors influence the choice of melting furnace type in a foundry?
57. Can you discuss the importance of temperature control in the melting process and its impact on casting quality?
58. How are alloying elements introduced and controlled during the melting of alloys?
59. What safety measures should be considered in the melting practice to prevent accidents and ensure worker well-being?
60. How has technology, such as induction melting or electric arc furnaces, influenced melting practices in the casting industry?

UNIT 4 **Science & Engineering of Solidification**

61. What is solidification, and how does it occur during the casting process?
62. Can you explain the significance of the solidification process in determining the final properties of a casting?
63. How do cooling rates influence the solidification structure of a casting?
64. What role does nucleation play in the initiation of solidification, and how is it controlled in casting?
65. Can you discuss the concept of dendritic growth during solidification and its impact on casting quality?
66. How does the cooling rate affect the formation of macroscopic and microscopic defects in a casting?
67. What are the different phases that can form during solidification, and how do they contribute to the overall microstructure?

Atmiya University Rajkot

68. How does alloy composition influence the solidification behavior and the resulting microstructure?
69. Can you explain the concept of eutectic reactions in the solidification of alloys?
70. What is the importance of grain refinement in controlling the properties of a cast material?
71. How do external factors such as mold material and temperature influence the solidification process?
72. Can you discuss the principles behind the use of chill molds to control solidification rates?
73. What role does inoculation play in modifying the solidification structure of a casting?
74. How do grain size and orientation impact the mechanical properties of a cast material?
75. Can you explain the concept of shrinkage porosity during solidification and methods to mitigate its effects?
76. How is computer modeling and simulation used in predicting and optimizing the solidification process in casting?
77. What challenges are associated with achieving uniform solidification in large or complex castings?
78. How does the design of gating and risering systems influence the solidification characteristics of a casting?
79. Can you discuss any recent advancements or innovations in the science and engineering of solidification in casting?
80. What considerations should be taken into account for directional solidification or controlled solidification techniques in specialized casting processes?

UNIT 5 **Inspection, Quality Control and Design Consideration in Metal Casting**

Inspection:

81. What is the importance of inspection in the metal casting process?
82. Can you describe the different types of inspections performed during various stages of casting production?
83. How are non-destructive testing methods applied in casting inspection?
84. What challenges are associated with inspecting complex or intricate castings?
85. How does dimensional inspection contribute to ensuring the accuracy of cast components?
86. Can you discuss the role of visual inspection in identifying surface defects in castings?
87. What are the common methods for detecting internal defects in castings, such as porosity or inclusions?
88. How has technology, such as digital imaging and 3D scanning, improved the inspection process in metal casting?

Quality Control:

Atmiya University Rajkot

89. What is the role of quality control in the metal casting industry?
90. How are quality control measures integrated into the casting process to ensure consistency and reliability?
91. Can you discuss the importance of process control in preventing defects during casting production?
92. What are the key factors considered in establishing quality standards for castings?
93. How does statistical process control (SPC) contribute to quality assurance in metal casting?
94. What are the challenges in implementing quality control measures for large-scale or mass production casting operations?
95. How is the quality of raw materials, such as alloys and molding sand, ensured in the casting process?
96. Can you explain the significance of traceability in quality control for cast components?
97. How are quality control practices adapted for specialized casting processes, such as investment casting or die casting?
98. What role does documentation play in maintaining and improving quality control standards in a foundry?

Design Consideration:

99. How does the design of a casting influence its manufacturability and ease of inspection?
100. What are the key design considerations to minimize defects and optimize the casting process?
101. Can you discuss the importance of tolerance and allowances in casting design?
102. How do material selection and alloy specifications impact the design of a casting?
103. What are the considerations for designing castings with complex geometries or thin-walled sections?
104. How can designers optimize the gating and risering system to improve casting quality?
105. Can you explain the role of simulation tools in evaluating and refining casting designs before production?

Atmiya University
Rajkot

Semester – II		
Course Code	**Course Title**	**Credits**
21BAENCC204	**Core-8:** Metaphysical Poetry	4 Credits

Part A – Answer in one word/line.

Unit 1

1. What is Metaphysical Poetry?
2. Who coined the term "Metaphysical Poetry"?
3. When did the Metaphysical Poetry movement emerge?
4. What distinguishes Metaphysical Poetry from other poetic movements?
5. Who are some prominent Metaphysical Poets?
6. What is the central theme of Metaphysical Poetry?
7. What role does wit play in Metaphysical Poetry?
8. How does Metaphysical Poetry use elaborate conceits?
9. What is the relationship between spirituality and Metaphysical Poetry?
10. What impact did Metaphysical Poetry have on later generations of poets?

Unit 2

1. Who are some major Metaphysical Poets?
2. Name one of John Donne's famous poems.
3. Which Metaphysical Poet is known for his religious and devotional works?
4. Who wrote "To His Coy Mistress," a well-known Metaphysical poem?
5. What is George Herbert's most celebrated work?
6. Who is often regarded as the leader of the Minor Metaphysical Poets?
7. Which Metaphysical Poet wrote "The Definition of Love"?
8. Who is known for his humorous and satirical Metaphysical poetry?
9. What is the distinctive style of Henry Vaughan, a Minor Metaphysical Poet?
10. Name one Minor Metaphysical Poet who was a contemporary of John Donne.

Unit 3

1. What is alliteration in poetry?
2. How does a simile differ from a metaphor?

Atmiya University

3. What is personification, and how is it used in literature?
4. Explain the concept of a paradox in literary terms.
5. What is a conceit in poetry?
6. Define apostrophe as a figure of speech.
7. How does synecdoche work in language and literature?
8. What is hyperbole, and how does it enhance literary expression?
9. What is a pun, and how does it create wordplay in writing?
10. Describe metonymy as a figure of speech and provide an example.

Unit 4

1. Who is the author of the poems in this unit?
2. Which poem by John Donne is featured?
3. What is the title of the first Holy Sonnet by John Donne?
4. Which religious theme is often explored in John Donne's poetry?
5. What type of poem is "A Hymn to God, the Father"?
6. Which literary movement is John Donne associated with?
7. Can you name another famous poem by John Donne?
8. What is a common feature of John Donne's metaphysical poetry?
9. What is the central emotion conveyed in Donne's "Song"?
10. How does Donne's poetry often blend the physical and spiritual realms?

Unit 5

1. What is the title of a poem by George Herbert in this unit?
2. Which George Herbert poem is known for its exploration of virtue?
3. Which literary movement are George Herbert and Andrew Marvell associated with?
4. What is a common theme found in George Herbert's poetry?
5. How is "The Pulley" by George Herbert characterized?
6. Which poem by Andrew Marvell is celebrated for its description of a garden?
7. How does Andrew Marvell's poetry often differ from that of George Herbert?
8. Can you name another famous work by Andrew Marvell?

Part B – Write answers in brief.

Unit 1

Atmiya University

1. Who coined the term "Metaphysical Poetry"? Write the history.
2. What distinguishes Metaphysical Poetry from other poetic movements?
3. Who are some prominent Metaphysical Poets?
4. What is the central theme of Metaphysical Poetry?
5. How does Metaphysical Poetry use elaborate conceits?
6. What is the relationship between spirituality and Metaphysical Poetry?
7. How does Metaphysical Poetry employ paradox?
8. What role does wit play in Metaphysical Poetry?
9. What is the significance of the metaphysical conceit?
10. How does Metaphysical Poetry challenge conventional ideas of love?
11. What is the connection between religion and Metaphysical Poetry?
12. How did the historical context of the 17th century influence Metaphysical Poetry?
13. How does Metaphysical Poetry use vivid and concrete imagery?
14. What is the impact of Metaphysical Poetry on later generations of poets?
15. How does the use of the dramatic monologue appear in Metaphysical Poetry

Unit 2

1. Who are considered major Metaphysical Poets, and why are they categorized as such?
2. Can you name a famous poem written by George Herbert?
3. Which Metaphysical Poet is known for his wit and intellectual depth?
4. What is the central theme of Andrew Marvell's "To His Coy Mistress"?
5. How does John Donne's poetry often blend the physical and the spiritual?
6. Who is recognized for his religious and devotional Metaphysical poetry?
7. What is unique about the poetic style of Richard Crashaw?
8. Who is the leader among the Minor Metaphysical Poets, and what characterizes their works?
9. Which Metaphysical Poet is known for his satirical and humorous poetry?
10. Can you name a famous work by Henry Vaughan, a Minor Metaphysical Poet?
11. Who is the contemporary of John Donne among the Minor Metaphysical Poets?
12. What distinguishes the Minor Metaphysical Poets from their major counterparts?
13. Which Metaphysical Poet is associated with the poem "The Definition of Love"?
14. How does the poetry of Anne Bradstreet reflect Metaphysical elements?

Atmiya University

15. What role did the Minor Metaphysical Poets play in the broader literary landscape of their time?

Unit 3

1. How does alliteration contribute to the musicality of poetry?
2. What is the primary difference between a simile and a metaphor?
3. How does personification breathe life into non-human entities in literature?
4. What role does paradox play in adding depth to literary works?
5. How does a conceit differ from a conventional metaphor or simile?
6. What is the purpose of using apostrophe in literary works?
7. Can you explain the concept of synecdoche and provide an example?
8. How does hyperbole intensify the impact of language in literature?

Unit 4

1. Which poem contains the first Holy Sonnet by John Donne?
2. What is the predominant theme of John Donne's poetry?
3. Can you identify the genre of "A Hymn to God, the Father"?
4. How would you describe John Donne's association with the Metaphysical Poetry movement?
5. Can you name another well-known work by John Donne?
6. What is a characteristic feature of John Donne's metaphysical poetry?
7. What is the primary emotion expressed in Donne's "Song"?

Unit 5

1. Which George Herbert poem explores the concept of virtue?
2. Can you identify the poem by Andrew Marvell featured in this unit?
3. What literary movement are George Herbert and Andrew Marvell associated with?
4. What is a recurring theme in George Herbert's poetry?
5. How would you describe the style and content of "The Pulley" by George Herbert?
6. What is the main focus of Andrew Marvell's poem "The Garden"?
7. How do the poetic styles of George Herbert and Andrew Marvell differ?

Part C – Write answers in descriptive.

Atmiya University

Unit 1

1. How did the term "Metaphysical Poetry" originate, and what does it signify?
2. Can you explain the key features that distinguish Metaphysical Poetry from other poetic movements?
3. Who were some of the prominent Metaphysical Poets, and what are their notable works?
4. What is the central thematic focus of Metaphysical Poetry?
5. How do Metaphysical Poets employ elaborate conceits in their works, and can you provide examples?
6. How does Metaphysical Poetry explore the relationship between spirituality and human experience?
7. What role does paradox play in Metaphysical Poetry, and how does it contribute to the poetic style?
8. In what ways does wit and intellectual wordplay characterize Metaphysical Poetry?
9. What is the significance of metaphysical conceits, and how do they enhance the poems?
10. How does Metaphysical Poetry challenge conventional notions of love and beauty?
11. Can you elaborate on the religious themes often present in Metaphysical Poetry?
12. How did the historical and cultural context of the 17th century influence the themes and concerns of Metaphysical Poets?
13. How do Metaphysical Poets employ vivid and concrete imagery in their works?
14. What distinguishes Metaphysical Poetry from the Romantic poetry that emerged later in literary history?
15. What enduring impact did the Metaphysical Poets have on subsequent generations of writers and poets?

Unit 2

1. What are the defining characteristics that distinguish major Metaphysical Poets from minor ones?
2. Can you delve into John Donne's unique contributions to the Metaphysical Poetry movement?
3. How does George Herbert's religious and devotional poetry align with the Metaphysical tradition?

Atmiya University

4. Could you analyze the central themes and stylistic elements of Andrew Marvell's "To His Coy Mistress" as a Metaphysical poem?
5. In what ways does John Donne's poetry exemplify the fusion of physical and spiritual themes?
6. What are the key religious and spiritual themes explored in the works of George Herbert?
7. How did the Minor Metaphysical Poets contribute to the overall diversity and development of the Metaphysical Poetry movement?

Unit 3

1. How does alliteration enhance the overall impact of a poem, and can you provide examples of its use?
2. In what ways do similes and metaphors contribute to the vividness of descriptions in literature?
3. How does personification breathe life into inanimate objects or abstract concepts, and why is it effective?
4. Can you elaborate on the role of paradox in creating thought-provoking and contradictory statements in literary works?
5. What distinguishes a conceit from a conventional metaphor or simile, and can you provide examples of conceits in literature?
6. How does the use of apostrophe in literature allow for direct address to absent or non-human entities, and what emotional depth does it add to the text?
7. Could you explain the concept of synecdoche in detail and provide examples of its various forms in literary works?

Unit 4

1. How does John Donne's poetry reflect the characteristics of Metaphysical Poetry?
2. Can you provide an analysis of the themes explored in John Donne's "Song"?
3. What is the significance of religious themes in Donne's "From Holy Sonnets-I"?
4. How does John Donne employ intricate conceits in his metaphysical poetry?
5. What is the structure and style of "A Hymn to God, the Father," and how does it contribute to its meaning?

Atmiya University

6. How did John Donne's personal experiences and religious beliefs influence his poetry?
7. Can you explain the impact of John Donne's poetry on the broader literary landscape of his time?

Unit 5

1. How does George Herbert's poem "Virtue" embody the themes of Metaphysical Poetry?
2. Can you analyze the central ideas and themes explored in "The Pulley" by George Herbert?
3. What is the significance of religious and spiritual themes in the poetry of George Herbert?
4. How does Andrew Marvell's "The Garden" exemplify the characteristics of Metaphysical Poetry?
5. What are the key elements that define the garden in Marvell's poem?
6. How does Andrew Marvell's style and approach to poetry differ from that of George Herbert?
7. Can you provide insights into the lasting impact of George Herbert and Andrew Marvell on the world of poetry?

Atmiya University

Faculty of Engineering and Technology
Department of Computer Engineering

B.Tech. SEM.-VI
Subject: Cloud Computing
(21UFEDE602)
Question Bank

Unit: 1

Sr. No.	Question	Mark
1	What is the primary benefit of cloud computing for businesses?	1
2	Name one feature of cloud computing that allows easy scalability.	11
3	Write application of grid and cluster computing.	1
4	Which cloud computing benefit supports global collaboration?.	1
5	What limits cloud adoption in areas with poor connectivity	1
6	What is the main purpose of cluster computing?	1
7	Which field commonly uses cluster computing for simulations?	1
8	Which middleware is commonly used in grid computing?	1

Atmiya University

Unit: 2

Sr. No.	Question	Mark
1	What is the topmost layer in a cloud service model?	1
2	Which layer provides the infrastructure resources in cloud computing?	1
3	Name the cloud layer that offers platforms for application development	1
4	Compare different cloud service providers with its parameters.	1
5	What is a hypervisor's primary function?	1
6	What is the purpose of a machine image in cloud computing?	1
7	What is virtualization?	1

Unit: 3

Sr. No.	Question	Mark
1	What is the primary purpose of identity management in cloud computing?	1
2	Name one common access control model used in cloud computing	1
3	What metric is typically monitored to assess account activity?	1
4	What does a user profile in SaaS platforms often define?	1
5	What is the primary purpose of MapReduce?	1
6	Who is the original developer of Hadoop?	1
7	What type of filesystem does Hadoop use	1

Unit 4

Sr. No.	Question	Mark
1	What is the main goal of cloud security	1
2	Which encryption technique is commonly used in cloud security?	1
3	Name a security challenge associated with shared cloud environments.	1
4	What is the key layer in a cloud security architecture for user authentication?	1
5	What is the primary architectural consideration for securing cloud applications?	1
6	What should be considered to ensure secure API usage in the cloud?	1
7	What is the purpose of application security in the cloud?	1

Unit 5

Sr. No.	Question	Mark
1	What does AWS stand for?	1
2	What is the primary purpose of AWS?	1
3	Name the AWS service used for object storage	1
4	Name a relational database service provided by AWS	1
5	What is the main purpose of Eucalyptus in cloud computing?	1
6	What is CloudSim	1
7	What is Aneka used for?	1
8	What is Google App Engine (GAE) used for?	1

Faculty of Engineering and Technology
Department of Computer Engineering

B.Tech. SEM.-VIII
Subject:Cloud Computing
(21UFEDE602)
Question Bank

Unit: 1

Sr. No.	Question	Mark
1	Explain benefit of cloud with brief notes.	4
2	Explain cloud eco system.	4
3	Write application of grid and cluster computing.	4
4	Draw and explain cloud layers with brief description.	7
5	Explain cloud service model in detail.	7
6	Explain cloud deployment model in detail.	7
7	Building blocks of Grid computing	
8	Explain cluster computing	
9	What is grid computing	

Atmiya University

Unit: 2

Sr. No.	Question	Mark
1	Explain load balancer and write function of load balancer.	7
2	Explain hypervisor type 1 and type 2 with neat sketch.	4
3	Draw and explain architecture of cloud computing.	7
4	Compare different cloud service providers with its parameters.	4
5	Explain machine imaging	4
6	Write difference between cloud vs virtualization	7
7	What is virtual machine technology and explain it	4

Unit: 3

Sr. No.	Question	Mark
1	**What is Identify Management and Access Control? Explain in detail**	7
2	**What is Identify Management and Access Control benefit?**	5
3	Explain account monitoring.	7
4	Introduction to map reduce, and programming model	5
5	Explain feature of map reduce with example	7
6	File system and Hadoop introduction	5
7	Short note on YARN.	7

Unit 4

Atmiya University

Sr. No.	Question	Mark
1	**Security aspects in cloud**	7
2	**Challenges and Risk in security**	7
3	**Security architecture and Architectural consideration**	7
4	**Data security**	7
5	Application security	5
6	**Types of Application security**	5
7	**Cloud Application security threats**	5
8	**Disaster in cloud and disaster recovery plan to implement**	

Unit 5

Sr. No.	Question	Mark
1	Write a short note on google app engine	5
2	Draw and explain app engine architecture	7
3	Write a short note on cloud sim	7
4	Write benefit of simulation over direct deployment	5
5	Draw and explain cloud sim architecture	5
6	Write a short note on eucalyptus	5
7	List various types of AWS data services and connectivity.	7
8	Write a short note on aneka	5

Atmiya University

B.Tech. SEM.-VII
Subject: Compiler Design
(21BTCECC702)
Question Bank
Unit: 1

Sr. No.	Question	Mark
1	What is pass and phases of compiler? With a neat block diagram, explain the various phases of a compiler in detail. With example	4
2	Explain different cousins of compiler.	4
3	Explain language processing system.	4
4	Differentiate between compiler and interpreter.	7
5	Explain front-end and back-end with suitable example.	7
6	Explain linker.	4
7	Explain Loader.	7

Atmiya University

Unit: 2

Sr. No.	Question	Mark
1	Explain lexical analysis.	4
2	Regular Expression examples.	7
3	Explain Thompson method with example.	7
4	Conversion from RE to NFA-^ using Thompson method.	7
5	Explain input buffering or buffer pair method.	4
6	How parsing and scanning are communicated? Explain with diagram.	4

Unit: 3

Sr. No.	Question	Mark
1	Explain rdp with suitable example.	4
2	Differentiate top down and bottom up parsing.	7
3	Explain bottom up parsing.	7
4	Explain operator precedence parser with suitable example.	7
5	Explain SLR with suitable example.	4
6	Explain shift reduce parser with suitable example.	4

Atmiya University

Unit: 4

Sr. No.	Question	Mark
1	Write a syntax directed definition for desk calculator. Justify whether this is an S-attributed definition or L-attributed definition. Using this definition draw annotated parse tree for 3*5+4n.	7
2	What are different forms of IC.	4
3	What are different forms of three address code.	4
4	What is inherited attribute? Write syntax directed definition with inherited attributes for type declaration for list of identifiers. Show annotated parse tree for the sentence real id1,id2,id3.	7
5	Write syntax directed definition for simple desk calculator. Using this definition, draw annotated parse tree for 3*5+4 n.	7

Unit: 5

Sr. No.	Question	Mark
1	What is activation record	4
2	Explain static and dynamic allocation	4
3	Explain access link and display.	4
4	Explain code optimization	7
5	Explain issue generated in code generation.	4

Atmiya University

Faculty of Engineering and Technology
Department of Computer Engineering

Subject: Computer Networks(21BTCECC402)

Question Bank

Chapter 1: Introduction to Computer Networks and Physical Layer

1. Explain Applications of Computer Networks in detail.
2. List the Classification of network in detail according to the area covered. Also explain each category of network in detail.
3. Draw and Explain the OSI reference model for network in detail.
4. Draw and Explain the TCP/IP reference model for network in detail.
5. Explain various types of guided Transmission Media in detail.
6. Explain various types of unguided Transmission Media (Wireless transmission) in detail.
7. What is the need of multiplexing? Explain Frequency Division Multiplexing in detail.
8. Explain Wavelength Division Multiplexing in detail.

Chapter 2: Data Link Layer

1. Explain Data Link Layer Design Issues (Functions of the Data Link Layer) in detail.
2. Explain cyclic redundancy check with example.
3. Explain Hamming code with example. Explain how Hamming code can be used to correct burst error.
4. List the Data Link Protocol used in network. Explain simplest protocol.
5. List the Data Link Protocol used in network. Explain stop and wait protocol.
6. List the Data Link Protocol used in network. Explain stop and wait ARQ protocol.
7. Explain sender window format for GO Back- N ARQ protocol.
8. List the Data Link Protocol used in network. Explain Selective Repeat ARQ protocol.
9. Explain the case when one of the frame is lost in the GO Back- N ARQ protocol.
10. Explain various types of frames defined by the High-level Data Link Control (HDLC) protocol.
11. Explain the various services provided by the point-to-point protocol.
12. Explain frame format defined by point-to-point protocol.
13. What is the function of protocols of MAC layer? Explain the various terms (Key assumptions) associated with Dynamic Channel Allocation.
14. What is meaning of Carrier Sense Multiple Access Protocols? Explain 1-persistent CSMA, nonpersistent CSMA and p-persistent CSMA protocol for channel allocation.

15. Explain concept of Ethernet in detail.
16. What are the applications of Bluetooth? Explain various types of networks used in Bluetooth.
17. Explain the following terms
    a. Repeaters
    b. Hubs
    c. Bridges
    d. Switches
    e. Routers
    f. Gateways

Chapter 3: Network Layer

1. Explain the concept of Implementation of connection-Oriented Service with diagram.
2. Compare Virtual-Circuit and Datagram Networks.
3. Differentiate Static and Dynamic Routing algorithms. Explain Distance vector routing algorithm.
4. Explain Link State Routing Algorithm in detail with required diagrams.
5. What is congestion control? List all policies used for the congestion control. Explain any two policies used for the congestion control in detail.
6. What is Quality of Service? List and explain the techniques available to improve Quality of Service.
7. Explain the role of Network Layer in the Internet.
8. Draw IPV4 header format and explain the each field of the header.
9. Explain ICMP protocol in details.
10. Explain DHCP protocol in detail.

Chapter 4: Transport Layer

1. What are the services provided by Transport layer? List the elements of transport protocols.
2. Explain the datagram header format of UDP protocol.
3. Explain the services provided by the UDP protocol.
4. Explain Flow and Error Control mechanism in UDP.
5. Explain the applications of UDP.
6. Explain the services provided by the TCP protocol? Explain the Stream delivery of data in the TCP protocol.
7. Explain Flow and Error Control mechanism in TCP.

Atmiya University

Chapter 5: Application Layer

1. Explain the concept of Domain name system in detail.
2. Explain the Architecture of WWW in detail with necessary figures.
3. Explain the various types of web documents (Static and Dynamic and active web pages).
4. Explain Hypertext Transfer Protocol in detail with necessary figures.
5. Explain Status code field used in the response message of HTTP protocol.
6. Explain Email Architecture with necessary figure.

Atmiya University

Atmiya University, Rajkot

Department of Mechanical Engineering

Subject:- Fluid Power Engineering (21BTMECC502)

Semester – V
IMPORTANT QUESTION

1. Give the Classification of Centrifugal Pump.
2. Discuss different Type of Impellers used in Centrifugal Pump
3. Explain with neat Sketch Construction & working of Centrifugal pump
4. Explain with neat Sketch Construction & working of Single acting Reciprocating Pump
5. Explain with neat Sketch vane pump
6. Obtain the expression for the force exerted by a jet of water on a fixed vertical plate in the direction of the jet.
7. Obtain the expression for the force exerted by a jet of water on a fixed inclined plate in the direction of the jet.
8. Obtain the expression for the workdone per second by a jet of water on a moving inclined plate with velocity u in the direction of the jet.
9. Derive the expression for the force exerted by jet on stationary curved plate when jet strikes the curved plate at the centre.
10. Derive an expression for workdone per second for a series of curved vanes by a jet of water striking at one tip of the vane.
11. Draw General layout and list out essential components of hydro-electric power plant.
12. Explain how hydraulic turbines are classified.
13. Define the specific speed of the turbine? Derive an expression for the specific speed . What is the significance of specific speed?
14. What is a draft tube? Why is it used in a reaction turbine?
15. Draw a neat sketch of a Pelton wheel turbine.
16. Draw a neat sketch of a Francis turbine.

Atmiya University Rajkot

17. Write note on axial flow reaction turbine with sketch of components of Kaplan Turbine.
18. Define and explain hydraulic efficiency, mechanical efficiency and overall efficiency of a turbine.
19. What do you understand about the characteristics curves of a turbine? Name the important types of characteristic curves.
20. Justify the need for multi-staging in a reciprocating air compressor. List any two advantages of multistage compression.
21. Derive an expression for workdone for the reciprocating air compressor with clearance volume and explain volumetric efficiency.
22. Explain working of a scroll compressor.
23. Draw the constructional figures of roots blower & screw compressors.
24. What is a centrifugal compressor and what are the advantages?
25. Differentiate between centrifugal and axial flow air compressor.
26. Explain the working principle of an axial flow compressor with a neat sketch.
27. What is surging and choking in the Centrifugal compressor? Explain with a Diagram.
28. Explain with the help of a neat sketch the working and principle of hydraulic press.
29. Draw a neat sketch, and explain the operation of Hydraulic Crane.
30. Draw a neat sketch, and explain the operation of Hydraulic Accumulator.
31. Explain with the help of a neat sketch the principle and operation of a Fluid torque converter.
32. What is Pascal's Law and how is it applicable to Hydraulic Machine?
33. Give the Function of Hydraulic Ram.
34. Draw a neat sketch, and explain the operation of Hydraulic Intensifiers
35. With the neat sketch explain the components of hydraulic system.
36. What are the advantages and limitations of hydraulic system?
37. Define Pascal's law and explain with neat sketch.
38. Explain Hydraulic Power Plant with neat sketch
39. With neat sketch explain construction and working of hydraulic torque convertor.
40. Write short notes on: Hydraulic intensifier
41. With usual notations expression for calculating head loss due to friction in a pipe.
42. State function of draft tube and explain with neat sketch different types of draft tubes.
43. Explain following terms: Net positive suction head, Priming, Cavitation in pump

Atmiya University Rajkot

44. Prove that head loss due to friction is equal to one third of total head inlet for maximum power transmission through nozzle.
45. Show that in case of jet striking the flat plates mounted on wheel, the efficiency will be maximum when the tangential velocity of wheel is half of the jet.
46. Explain the following terms with reference to water turbines. Give expression of each efficiencies.(1) Hydraulic efficiency (2) Mechanical efficiency and (3) Overall efficiency
47. Enlist the various types of impeller used in centrifugal pump and explain any one from it with a neat sketch
48. Derive an expression for the optimum value of the intercooler pressure in a two stage reciprocating air compressor for perfect inters cooling condition.
49. Give classification of Reciprocating pump. Draw neat sketch of single acting reciprocating pump
50. Write short note on Hydraulic ram
51. Write short note on Hydraulic Accumulator
52. Write short note on Hydraulic Press
53. Explain with neat sketch governing mechanism of Francis Turbine.
54. With neat sketch explain construction and working of hydraulic crane.
55. Explain how hydraulic turbines are classified.
56. Describe principle construction and working of centrifugal compressor.
57. Why governing of water turbine is required? Explain governing of any one hydraulic turbine with neat sketch.
58. Enlist the various types of impeller used in centrifugal pump and explain any one from it with a neat sketch.
59. A tank, which is free to move, is provided with an orifice on side, through which jet of water is coming out. Obtain an equation for work done per sec on tank and efficiency of propulsion.
60. Draw a neat sketch of a Francis turbine.

Atmiya University
Rajkot

Faculty of Engineering and Technology
Department of Computer Engineering

B.Tech. SEM.-III
Subject: Database Management System(21BTCECC301)
Question Bank

Unit: 1

Sr. No.	Question	Mark
1	Explain responsibility of DBA in detail.	4
2	Explain three level Data abstraction.	4
3	Explain Different types of Keys in DBMS with examples.	4
4	Explain Specialization, Generalization and Aggregation with diagrams.	7
5	Explain advantages of DBMS over file management systems.	7
6	Explain Weak entity set and Strong entity set.	4
7	Explain disadvantages of the file system compared to the Database management system.	7
8	Explain applications of DBMS	4
9	Explain Data Models in brief.	4

Atmiya University

Unit: 2

Sr. No.	Question	Mark
1	What is Relational Algebra? Explain selection, Projection and Cartesian product operation.	4
2	What is normalization? What is the need of it? Also Explain 1NF,2NF and 3NF with examples.	7
3	Define functional dependency. Explain different types of FD with the help of example.	7
4	What Is decomposition? Explain different types of decomposition.	7
5	Describe Structure of relational databases.	4
6	Explain closure of FD set	4

Atmiya University

Unit: 3

<table>
<tr><th>Sr. No.</th><th>Question</th><th>Mark</th></tr>
<tr><td>1</td><td>Explain State Transition Diagram.</td><td>4</td></tr>
<tr><td>2</td><td>Define Locking. Explain lock-based protocol.</td><td>7</td></tr>
<tr><td>3</td><td>Find out the following schedule is Conflict Serializable or not. And also describe its steps.
<table>
<tr><td>T1</td><td>T2</td></tr>
<tr><td>R(A)</td><td></td></tr>
<tr><td></td><td>R(A)</td></tr>
<tr><td></td><td>R(B)</td></tr>
<tr><td></td><td>W(B)</td></tr>
<tr><td>R(B)</td><td></td></tr>
<tr><td>W(A)</td><td></td></tr>
</table></td><td>4</td></tr>
<tr><td>4</td><td>What is a transaction? List and explain ACID property of transaction with example.</td><td>4 or 7</td></tr>
<tr><td>5</td><td>Explain conflict serializability and view serializability with Example.</td><td>7</td></tr>
<tr><td>6</td><td>What are the three problems due to concurrency? How the problems can be avoided.</td><td>4</td></tr>
</table>

Unit: 4

Atmiya University

Faculty of Engineering and Technology
Department of Computer Engineering

Sr. No.	Question	Mark
1	Explain system recovery procedure with Checkpoint record concept.	7
2	Explain Shadow Paging Technique.	4
3	Explain working of two-phase commit protocol.	4
4	Explain Query Processing in detail.	7
5	Explain Deferred Database Modification log-based recovery method.	7
6	Discuss Immediate Database Modification log based recovery method.	7
7	What is a deadlock? Explain wait-for-graph. When does it occur?	7
8	Explain deadlock Detection, Recovery and prevention methods.	7

Atmiya University

Unit: 5

Sr. No.	Question	Mark
1	What are SQL Constraints? And also explain its types.	4
2	Explain TCL Commands with syntax and examples.	4
3	Explain Aggregate Functions with syntax and examples.	4
4	Explain Order by, group by and Having with syntax and example.	7
5	Explain Numeric and String Functions.	4
6	Explain View and its types with syntax and examples.	7
7	What is Join? Define its types. And explain Inner join in detail.	7

Atmiya University

Digital Electronics(21BTCEIC301)
Questions Bank
For 1marks

	UNIT-1
1	Convert $(102)_{10}$ into ($)_2$.
2	Convert $(1001)_2$ into ($)_{10}$.
3	Convert $(56)_8$ into($)_2$.
4	Convert $(2A)_{16}$ into ($)_2$.
5	$(15)_{10}$–$(10)_{10}$ using 1's compliment.
6	$(15)_{10}$–$(10)_{10}$ using2's compliment.
7	$(10)_{10}$–$(15)_{10}$ using1's compliment.
8	$(10)_{10}$–$(15)_{10}$ using2's compliment.
9	$(101101)_2$to greycode.
10	(1011101) grey to binary.
	UNIT-2
11	Implement Not gate using NAND gate.
12	Implement AND gate using NAND gate.
13	Implement OR gate using NAND gate.
14	Implement Not gate using NOR gate.
15	Implement AND gate using NOR gate.
16	Implement OR gate using NOR gate.
17	Reduce Boolean function y=A'+AB
18	Reduce Boolean function y=A+A'B
19	What is SOP?
20	What is POS?
	UNIT-3
21	What is combination circuit.
22	What half adder.
23	What is full adder?
24	What is half subtractor.
25	What is full subtractor.

Atmiya University

26	What is MUX?
27	What is De-mux?
28	What is encoder?

29	What is decoder?
30	What is priority encoder?
UNIT-4	
31	What is sequential circuit.
32	What is SR flip-Flop?
33	What is Dflip-Flop?
34	What is JKflip-Flop?
35	What is Tflip-Flop?
36	What is synchronous counter?
37	Give difference between synchronous counter and Asynchronous counter.
38	What is Asynchronous counter?
39	What is registor?
40	What is flip-flop.
UNIT-5	
41	What is logicfamilies?
42	Explain various terminology used for logic families.
43	What is ECL?
44	What is TTL?
45	What is CMOS?
46	What noise?
47	What noise margin?
48	What noise immunity?
49	What is propagation delay?
50	What is power dissipation?

DigitalElectronicsQuestions Bank

Atmiya University

Faculty of Engineering and Technology
Department of Computer Engineering

	UNIT-1	Marks
1	Different types of number system conversion.	4
2	Miscellaneous example of number system.	4
3	What is radix for number system ?Derive number system for r=11.	4
4	Explain1's compliment.	4
5	Explain2's compliment.	4
6	Exampleof1's compliment.	7
7	Exampleof2's compliment.	7
8	Explain various binary codes.	7
9	Explain binary to gray conversion.	7
10	Explain gray to binary conversion.	7
	UNIT-2	
11	Explain NAND as universal gate.	4
12	Explain NOR as universal gate.	4
13	Various circuit implementations using NAND gate.	4
14	Various circuit implementations using NOR gate.	4
15	Explain various law for Boolean algebra.	4
16	Explain de'morgan' srule.	7
17	Various example on Boolean algebra.	7
18	ExplainK-mapfor5varible.	7
19	Example of K-map for SOP form.	7
20	Example of K-map for POS form.	7
	UNIT-3	
21	What is combination circuit.	4
22	Various circuit implementation of combinational circuit.	4
23	Explain half adder.	4
24	Explain half subtractor.	4
25	Explain full adder.	4
26	Explain full subtractor.	7
27	Explain MUX of various types.	7
28	Explain De-MUX of various types.	7
29	Explain Encoder of various types.	7

Atmiya University

30	Explain Decoder.	7
UNIT-4		
31	What is sequential circuit.	4
32	Explain SR flip-Flop.	4
33	Explain Dflip-Flop.	4
34	Explain JKflip-Flop.	4
35	Explain Tflip-Flop.	4
36	Explain synchronous up counter.	7
37	Explain synchronous down counter.	7
38	Explain Asynchronous up counter.	7
39	Explain Asynchronous down counter.	7
40	Explain varioustype of register.	7
UNIT-5		

41	Explain logic families.	4
42	Explain various terminology used for logic families.	4
43	Explain ECL families in detail.	4
44	Explain TTL families in detail.	4
45	Explain CMOS families in detail.	4
46	Compare ECL ,TTL ,CMOS logic families.	7
47	Explain limitation of ECL logic families.	7
48	Explain limitation of TTL logic families.	7
49	Explain limitation of ECL logic families.	7
50	Explain future and scope of logic families.	7

Atmiya University

B.Tech. SEM.-VI
Subject: Data Mining & Data Warehousing(21BTCECC603)
Question Bank

Unit:1

Sr. No.	Question	Mark
1	Discuss the role of data mart.	4
2	Explain Metadata repository with examples.	4
3	Clearly state the differences b/w "Data Warehouse" and "Operational Database System".	7
4	Define the following term: a. Data Mart b. Enterprise Warehouse c. Virtual Warehouse	7
5	Draw and Explain Data Warehouse architecture.	4
6	Draw and Explain three tier architecture of data warehouse.	7
7	Why do we need a data warehouse?	1
8	Explain the process of Data Warehousing.	4
9	Short Note: Integration of data mining.	4
10	Define Data warehousing. Explain the features of warehouse	4
11	Short note: Data Life Cycle (DLC)	4
12	Short note: ETL (Extract Transform Load)	4

Unit:2

Atmiya University

Sr. No.	Question	Mark
1	List and describe major issues in data mining.	4
2	What is cuboid? Explain various OLAP operations on the data cube with examples.	7
3	Compare OLTP and OLAP systems.	7
4	Explain star, snowflake and fact constellation schema for multidimensional database.	7
5	Explain different types of data on which data mining can be performed.	4
6	What is data mining? Explain data mining as one step of the knowledge discovery process.	7
7	Explain the KDD process in detail.	4
8	With the help of a suitable diagram explain the process of knowledge discovery from the database.	7
9	Explain various application areas of data mining and knowledge discovery process in brief.	4
10	Write a short note on spatial, legacy and multimedia databases.	4
11	Differentiate between fact table vs. dimensional table.	7

Unit:3

Sr. No.	Question	Mark

Atmiya University

1	Explain the preprocessing required handling missing data and noisy data during the process of data mining.	7
2	List and describe the methods for handling the missing values in data cleaning.	4
3	Explain outlier analysis techniques in data mining.	4
4	Explain the following term: a. Concept of hierarchy b. Histogram Analysis	4
5	What is noise? Describe the possible reasons for noisy data. Explain the different techniques to remove the noise from data.	7
6	Explain Linear and non-linear regression methods of prediction.	7
7	Explain following: a. Binning method. b. How to handle missing values in a data set.	4
8	Explain different types of transformation approaches for transforming data.	4
9	Short Note: a. Data integration b. Data compression c. Chi-Square method. d. Data cube Aggregation e. Data Mining primitives	7
10	What is the concept of hierarchy? List and explain types of hierarchy in detail.	4
11	Explain different types of transformation approaches for transforming data.	7
12	Suppose the data for analysis includes the attribute age. The age values for the data tuples are in increasing order: 13,15,16,16,19,20,23,29,35,41,44,53,62,69,72 i. Use min max normalization to transform the value age that is 45 into the range [0:0,1:0] ii. Use Z-score normalization for the age and also calculate standard deviation .	7

Atmiya University

Unit:4

Sr. No.	Question	Mark
1	Explain two measure rules of interestingness: support and confidence with example.	4
2	What are the limitations of Apriori Approach? Briefly describe the techniques to improve the efficiency of apriori algorithm.	4
3	Discuss various issues in Apriori algorithm.	4
4	Why is strong association rule not always interesting? Explain with example.	4
5	State how the partitioning method may improve the efficiency of association mining.	7
6	Describe the list of techniques for improving the efficiency of apriori based mining.	7
7	What is market basket analysis? Explain Association rule with confidence and support.	7
8	Write an algorithm for finding frequent itemset using candidate generation.	7
9	Write and explain Apriori Algorithm for discovering frequent item sets for mining Boolean association rules.	4

Unit:5

Atmiya University

Faculty of Engineering and Technology
Department of Computer Engineering

Sr. No.	Question	Mark
1	Explain Rule Based Classification in Brief.	4
2	Explain how the accuracy of a classifier can be measured.	4
3	Explain the classification with the decision tree induction method.	4
4	Why is the Naïve Bayesian classification called “Naïve”? Briefly outline the major ideas of Naïve Bayes classification.	7
5	Write a note on Rule Based Classification.	7
6	Explain the steps of the ID3 algorithm for generating a decision tree.	7
7	Write the difference between classification and prediction? Also discuss various issues of classification and prediction.	7
8	Explain how the accuracy of a classifier can be measured?	7
9	Explain K –means and K –medoids algorithm of clustering.	7
10	Write the steps of K –means clustering algorithm. Also state its limitations	4
11	Mention any two types of application in clustering.	4
12	Discuss the application of data mining in Banking and Finance.	4
13	Describe and explain different types of clustering methods.	7
14	Explain different types of web mining with examples.	4
15	Differentiate classification and clustering.	7
16	What is Cluster analysis? List and explain requirements of clustering in data mining.	4

Atmiya University

Department of Mechanical engineering

Semester - 3

Course: Design of Machine Elements (21BTMECC304)

Important Questions

Q.1	Classify and explain springs according to their shapes with neat sketches.
Q.2	Explain step by step design procedure of helical spring.
Q.3	Define the following terms in reference to helical spring with necessary equation:- 1. Solid length 2. Free length 3. Spring index 4. Spring rate 5. Pitch 6. Wahl□s stress factor
Q.4	Develop the design for a helical compression spring subjected to a maximum force of 1250 N. The deflection of the spring corresponding to the maximum force should be approximately 30 mm. The spring index can be taken as 6. The spring is made of patented and cold-drawn steel wire. The ultimate tensile strength and modulus of rigidity of the spring material are 1090 and 81370 N/mm^2 respectively. The permissible shear stress for the spring wire should be taken as 50% of the ultimate tensile strength. Find:- (i) wire diameter (ii) mean coil diameter (iii) number of active coils (iv) total number of coils (v) free length of the spring (vi) pitch of the coil

Atmiya University Rajkot

Q.5	Design a close coiled helical compression spring for a service load ranging from 2250 N to 2750 N. The axial deflection of the spring for the load range is 6 mm. Assume a spring index of 5. The permissible shear stress intensity is 420 N/mm^2 and modulus of rigidity, G = 84 kN/mm^2.
Q.6	Design a helical compression spring for a maximum load of 1000 N for a deflection of 25 mm using the value of spring index as 5. The maximum permissible stress for spring wire is 420 N/mm^2, and modulus of rigidity is 84 KN/ mm^2.
Q.7	What is machine design? Classify the different types of design followed by the methods required to design.
Q.8	Explain the step by step design procedure for machine elements. Explain the basic requirements of machine elements.
Q.9	Explain the step by step design procedure for machine design.
Q.10	Explain maximum shear stress theory & maximum principal stress theory with reference to theories of failure.
Q.11	Explain in brief the factors affecting the endurance strength of material.
Q.12	What do you mean by stress concentration? Discuss various methods for reducing stress concentration.
Q.13	A cylindrical shaft made of steel of yield strength 700 MPa is subjected to static loads consisting of bending moment 10 kN-m and a torsional moment 30 kN-m. Determine the diameter of the shaft using maximum shear stress theory and maximum strain energy theory, assuming a factor of safety of 2. Take E = 210 GPa and poisson□s ratio = 0.25.

Atmiya University Rajkot

Q.14	A machine component is subjected to fluctuating stress that varies from 40 to 100 MPa. The corrected endurance limit stress for the machine component is 270 MPa. The ultimate tensile strength and yield strength of material are 600 and 450 MPa respectively. Calculate the factor of safety using 1. Gerber theory 2. Soderberg line and 3. Goodman line.
Q.15	Explain design criteria with Soderberg, Goodman line and Gerber curve for the components subjected to fluctuating load.
Q.16	A circular bar of 600mm length is supported freely at its ends. It is acted upon by a cyclic load having a minimum value of 15 kN and a maximum value of 55 kN. Determine the diameter of the bar by taking factor of safety of 1.5, size effect of 0.85, surface finish factor of 0.9. The material properties of the bar are given by: ultimate strength of 650 MPa, yield strength of 500 MPa and endurance strength of 325 MPa.
Q.17	A cantilever beam made of carbon steel of circular cross-section as shown in figure, is subjected to a load which varies from □F to 3F. Determine the maximum load that the beam can sustain for an indefinite life. Factor of safety = 2, Stress concentration factor =1.42, Notch sensitivity = 0.9 Ultimate strength = 550 MPa , Yield strength = 470 MPa , Endurance limit = 275 MPa , Size factor = 0.85, Surface finish factor = 0.89. 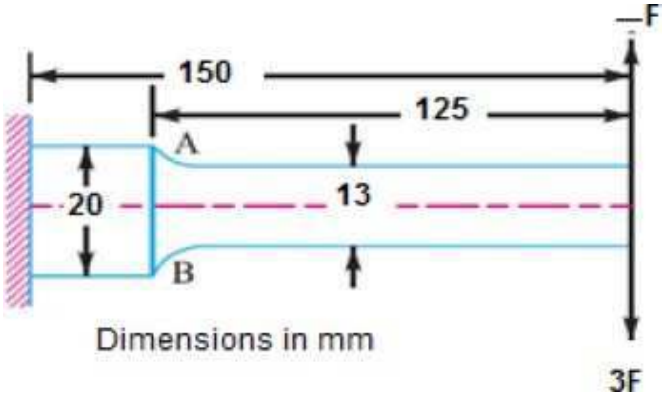

Atmiya University Rajkot

Atmiya University

Department of Mechanical engineering

Semester - 3

Course: Design of Machine Elements (21BTMECC304)

Important Questions

Q.1	What do you mean by Concentric Spring?
Q.2	Explain advantages and application of concentric spring.
Q.3	What is the basic application of leaf spring? Explain its importance for the automobile sector with respect to other types of spring.
Q.4	Application of Cotter and Knuckle joints.
Q.5	Explain Designing steps of Cotter Joints with suitable figures.
Q.6	Explain Designing steps of Knuckle Joints with suitable figures.
Q.7	Explain the nipping phenomena observed in leaf spring with a diagram.
Q.8	Compare knuckle joint and cotter joint.
Q.9	A semi-elliptic leaf spring used for automobile suspension consists of three extra full-length leaves and 15 graduated-length leaves, including the master leaf. The centre-to-centre distance between two eyes of the spring is 1 m. The maximum force that can act on the spring is 75 kN. For each leaf, the ratio of width to thickness is 9:1. The modulus of elasticity of the leaf material is 207 000 N/mm^2. The leaves are pre-stressed in such a way that when the force is maximum, the stresses induced in all leaves are the same and equal to 450 N/mm^2. Solve the problem to find. (i) Width and thickness of the leaves (ii) Initial nip (iii) The initial pre-load required to close the gap C between extra full length leaves and graduated-length leaves.
Q.10	It is required to design a cotter joint to connect two steel rods of equal diameter. The permissible stresses for the rods, spigot end and socket end are $\sigma t = 96\ N/mm^2$, $\sigma c = 134\ N/mm^2$ & $\tau = 45\ N/mm^2$. For cotter, $\sigma t = 80\ N/mm^2$, $\tau = 40\ N/mm^2$. Each rod is subjected to an axial tensile force of 60 kN. Solve the problem to find. 1. Diameter of spigot 2. Width & thickness of cotter 3. Thickness of socket collar
Q.11	What is a lever? Explain the working principle of lever.

Q.12	Design a knuckle joint to connect two mild steel bars under a tensile load of 25 KN. The allowable stresses are 65 MPa in tension, 50 MPa, in shear and 83 MPa in crushing.
Q.13	The valve of an aircraft engine is operated by a cluster of two concentric springs made of the same material. The maximum load on the spring is 6500 N. The permissible shear stress for the spring material is 625 N/mm^2. Assuming spring index for both springs as 6 and the deflection under the load should not exceed 30 mm. Calculate the main dimensions of the springs. G = 8 □10^4 N/mm^2. Use standard coil clearance.
Q.14	Find the diameter of a solid steel shaft to transmit 20 kW at 200 r.p.m. The ultimate shear stress for the steel may be taken as 360 MPa and a factor of safety as 8. If a hollow shaft is to be used in place of the solid shaft, find the inside and outside diameter when the ratio of inside to outside diameters is 0.5.
Q.15	A line shaft is driven by means of a motor placed vertically below it. The pulley on the line shaft is 1.5 metre in diameter and has belt tensions 5.4 kN and 1.8 kN on the tight side and slack side of the belt respectively. Both these tensions may be assumed to be vertical. If the pulley be overhang from the shaft, the distance of the centre line of the pulley from the centre line of the bearing being 400 mm, find the diameter of the shaft. Assuming maximum allowable shear stress of 42 MPa.
Q.16	A shaft made of mild steel is required to transmit 100 kW at 300 rpm. The supported length of the shaft is 3 meters. It carries two pulleys each weighing 1500 N supported at a distance of 1 metre from the ends respectively. Assuming the safe value of stress, determine the diameter of shaft.
Q.17	A solid shaft is transmitting 1 MW at 240 r.p.m. Determine the diameter of the shaft if the maximum torque transmitted exceeds the mean torque by 20%. Take the maximum allowable shear stress as 60 MPa.

Atmiya University Rajkot

Q.18	A solid circular shaft is subjected to a bending moment of 3000 N-m and a torque of 10 000 N-m. The shaft is made of 45 C 8 steel having ultimate tensile stress of 700 MPa and a ultimate shear stress of 500 MPa. Assuming a factor of safety as 6, determine the diameter of the shaft.
Q.19	A mild steel shaft transmits 20 kW at 200 r.p.m. It carries a central load of 900 N and is simply supported between the bearings 2.5 metres apart. Determine the size of the shaft, if the allowable shear stress is 42 MPa and the maximum tensile or compressive stress is not to exceed 56 MPa. What size of the shaft will be required, if it is subjected to gradually applied loads?
Q.20	A hollow shaft of 0.5 m outside diameter and 0.3 m inside diameter is used to drive a propeller of a marine vessel. The shaft is mounted on bearings 6 metre apart and it transmits 5600 kW at 150 r.p.m. The maximum axial propeller thrust is 500 kN and the shaft weighs 70 kN. Determine : 1. The maximum shear stress developed in the shaft, and 2. The angular twist between the bearings.
Q.21	A steel spindle transmits 4 kW at 800 r.p.m. The angular deflection should not exceed 0.25 □ per metre of the spindle. If the modulus of rigidity for the material of the spindle is 84 GPa, find the diameter of the spindle and the shear stress induced in the spindle.
Q.22	Compare the weight, strength and stiffness of a hollow shaft of the same external diameter as that of solid shaft. The inside diameter of the hollow shaft being half the external diameter. Both the shaft have same material and length.
Q.23	Design the rectangular key for a shaft of 50 mm diameter. The shearing and crushing stresses for the key material are 42 MPa and 70 MPa.

Atmiya University
Rajkot

Q.24	A 45 mm diameter shaft is made of steel with yield strength of 400 MPa. A parallel key of size 14 mm wide and 9 mm thick made of steel with yield strength of 340 MPa is to be used. Find the required length of key, if the shaft is loaded to transmit the maximum permissible torque. Use maximum shear stress theory and assume a factor of safety of 2.
Q.25	Design a muff coupling which is used to connect two steel shafts transmitting 40 kW at 350 r.p.m. The material for the shafts and key is plain carbon steel for which allowable shear and crushing stresses may be taken as 40 MPa and 80 MPa respectively. The material for the muff is cast iron for which the allowable shear stress may be assumed as 15 MPa.
Q.26	Design a clamp coupling to transmit 30 kW at 100 r.p.m. The allowable shear stress for the shaft and key is 40 MPa and the number of bolts connecting the two halves are six. The permissible tensile stress for the bolts is 70 MPa. The coefficient of friction between the muff and the shaft surface may be taken as 0.3.
Q.27	Design a protective type of cast iron flange coupling for a steel shaft transmitting 15 kW at 200 r.p.m. and having an allowable shear stress of 40 MPa. The working stress in the bolts should not exceed 30 MPa. Assume that the same material is used for shaft and key and that the crushing stress is twice the value of its shear stress. The maximum torque is 25% greater than the full load torque. The shear stress for cast iron is 14 MPa.
Q.28	An electric motor driven power screw moves a nut in a horizontal plane against a force of 75 kN at a speed of 300 mm / min. The screw has a single square thread of 6 mm pitch on a major diameter of 40 mm. The coefficient of friction at screw threads is 0.1. Estimate power of the motor.

Atmiya University
Rajkot

Q.29	A vertical two start square threaded screw of a 100 mm mean diameter and 20 mm pitch supports a vertical load of 18 kN. The axial thrust on the screw is taken by a collar bearing of 250 mm outside diameter and 100 mm inside diameter. Find the force required at the end of a lever which is 400 mm long in order to lift and lower the load. The coefficient of friction for the vertical screw and nut is 0.15 and that for collar bearing is 0.20.
Q.30	A screw jack is to lift a load of 80 kN through a height of 400 mm. The elastic strength of screw material in tension and compression is 200 MPa and in shear 120 MPa. The material for nut is phosphor-bronze for which the elastic limit may be taken as 100 MPa in tension, 90 MPa in compression and 80 MPa in shear. The bearing pressure between the nut and the screw is not to exceed 18 N/mm^2. Design and draw the screw jack. The design should include the design of 1. screw, 2. nut 3. handle and cup and 4. body.
Q.31	Explain the design of the shaft on the basis of strength when it is subjected to combined twisting and bending moments.
Q. 32	How are the keys classified? Explain different types of keys with neat sketches and state their applications.
Q.33	Prove that for a sunk key based on its strength the permissible crushing stress for the key material is at least twice the permissible shearing stress.
Q.34	What are the requirements of good shaft coupling? Explain different types of couplings with neat sketches and state their applications.
Q.35	Explain step by step design procedure of clamp coupling.
Q.36	Explain step by step design procedure of protective type flange coupling.
Q.37	What are the applications of power screw? Also explain different types of threads used in power screws with sketches.

Atmiya University
Rajkot

Q.38	What are the important parameters of power screw? Explain each of them.
Q.39	Explain with diagram terminology of power screw.
Q.40	Explain the torque required for lifting the load in power screw with necessary equation. OR Obtain the expression of torque for square threaded screw for lifting the load with proper diagram.
Q.41	Explain the torque required for lowering the load in power screw with necessary equation. OR Obtain the expression of torque for square threaded screw for lowering the load with proper diagram.
Q.42	What do you understand by self locking and overhauling of power screw? Explain its condition.
Q.43	Obtain the equation for efficiency of square threaded screw.
Q.44	Explain step by step design procedure of screw jack.

Atmiya University
Rajkot

IMPORTANT QUESTIONS FOR DOM SUBJECT

Subject: Dynamics of Machines (21BTMECC405)

UNIT – I Balancing of rotating & reciprocating masses

Q-1 Why is balancing of rotating parts necessary for high speed engines? Four examples of practical problems where balancing is done.

Q-2 Explain clearly the terms static balancing and dynamic balancing. State the necessary conditions to achieve them.

Q-3 Explain the method of balancing of different masses revolving in the same plane.

Q-4 Explain the method of balancing of different masses revolving in the different plane.

Q-5 Four masses m_1, m_2, m_3 and m_4 are 200 kg, 300 kg, 240 kg and 260 kg respectively. The corresponding radii of rotation are 0.2 m, 0.15 m, 0.25 m and 0.3 m respectively and angle between successive masses are 45°, 75°, and 135°. Find the position and magnitude of the balancing mass required. If its radius of rotation is 0.2 m.

Q-6 A shaft carries four masses A, B, C and D of magnitude 200 Kg, 300 Kg, 400 Kg and 200 Kg respectively and revolving at radii 80 mm, 70mm, 60mm and 80mm in planes measured from A at 300mm, 400mm and 700mm. The angles between the crank measured anticlockwise are A to B 45°, B to C 70° and C to D 120°. The balancing masses are to be placed in plane X and Y. The distance between the planes A to X is 100 mm, between X and Y is 400 mm and between Y to D is 200 mm. If the balancing masses revolve at a radius of 100 mm, find their magnitude and angular positions.

Q-7 The four masses m_1, m_2, m_3 and m_4 having their radii of rotation as 100 mm, 120 mm, 250 mm and 300 mm are 200 kg, 250 kg, 150 kg and 100 kg in magnitude respectively. The angles between the successive masses are 45°, 70° and 140° respectively. Find the position and magnitude of the balancing mass required, if its radius of rotation is 350 mm.

Atmiya University Rajkot

Q-8 A rotating shaft carries four unbalanced masses m_1, m_2, m_3 and m_4 of magnitudes 20 kg, 15 kg, 17 kg and 14 kg revolving at radii 60 mm, 80 mm, 100 mm and 60 mm respectively. The masses m_2, m_3 and m_4 revolve in planes 100 mm, 180 mm and 300 mm respectively form the plane of mass m1, and are angularly located at 65°, 145° and 270° respectively, measured in anticlockwise direction, from the mass m_1 looking from the mass end of the shaft. The shaft is to be dynamically balanced by two masses, both located at 70 mm radii and revolving in place midway between those of masses m1 and m_2 and midway between those of masses m_3 and m_4. Find the magnitudes of the balancing masses and their respectively angular positions using analytical and graphical method.

Q-9 Four masses A, B, C and D are completely balanced. Masses C and D makes angles of 90° and 105° respectively with B in the same sense. The rotating masses have following properties:
m_b = 25 kg, r_a = 150 mm, m_c = 40 kg, r_b = 200 mm
m_d = 35 kg, r_c = 100 mm and r_d = 180 mm
Planes B and C are 250 mm apart. Find
1. The mass A and its angular position
2. The position of planes A and D

Q-10 Explain D'Alembert's Principle for the body subjected to external forces with proper sketch.

Q-11 Explain the concept of primary and secondary unbalanced forces due to reciprocating masses in single cylinder engines with appropriate equation and proper sketch.

Q-12 Explain the following terms with suitable equations, for an uncoupled two cylinder locomotive engine.
a. Variation in tractive force
b. Swaying couple
c. Hammer blow

Q-13 Explain the concept of primary and secondary forces in V- engines with appropriate equation and proper sketch.

Q-14 A single cylinder reciprocating engine has speed of 240 rpm, stroke 300 mm, mass of reciprocating parts 50 kg, mass of revolving parts at 150 mm radius 30 kg. If all the mass of Revolving parts and two-third of the mass of reciprocating parts are to be balanced, find the balance mass required at radius of 400 mm and the residual unbalanced force when the crank has rotated 60° from IDC.

Atmiya University Rajkot

Q-15 An air compressor has four in-line cylinders at 90 degree intervals. The crank radius is 140 mm, while the connecting rod is 560 mm long for each cylinder. The mass of reciprocating parts is 20 kg for each cylinder and speed of rotation is 600 r.p.m. The cylinder is 300 mm apart. Show that there are no out of balance primary and secondary forces and determine corresponding magnitude of primary and secondary couples.

Q-16 A single cylinder reciprocating engine has a reciprocating mass of 50 kg and a stroke of 300 mm. The crank rotates at 60 rpm. The mass of revolving parts at 150 mm radius is 30 kg. If two □ thirds of the reciprocating parts and whole of the revolving parts are to be balanced, Find
1. The balance mass required at a radius of 300 mm
2. The unbalanced force, when the crank has turned 45° from IDC.

Q-17 The Crank radius and connecting rod length of a four cylinder inline engine are 200 mm and 900 mm respectively. The spacing between adjacent planes of cranks are 400 mm, 600 mm and 500 mm. If the engine is in complete primary balance, find the reciprocating masses of the inner cranks and their angular positions. Also find the secondary unbalanced force if the engine speed is 300 rpm.

Q-18 A two cylinder locomotive engine has the specifications:
Reciprocating masses/cylinder = 300 kg
Crank radius = 290 mm
Angle between crank = 90°
Driving wheel diagram = 1780 mm
Distance between cylinder centers = 640 mm
Distance between driving wheel plans = 1530 mm
Determine:
1. The fraction of reciprocating masses to be balanced if the hammer blow is not to exceed 45 kN at 95 Km/hr speed.
2. The variation in the tractive effort.
3. The magnitude of swaying couple.

UNIT □ II Introduction to Mechanical Vibrations

Q-19 What is vibration? Explain the phenomenon of vibration. What are the advantages and disadvantages of vibration?

Q-20 Define the following terms:-
Simple Harmonic Motion, Time Period, Frequency, Amplitude, Resonance, Degree of Freedom, Spring Stiffness, Damping

Q-21 Explain the concept of SHM with diagram.

Atmiya University Rajkot

Q-22 What are the basic elements of vibratory system? Explain with neat sketches and necessary equation, the following term
1. Equivalent spring
2. Equivalent damper

Q-23 What are the various types of vibration? Explain with diagram.

Q-24 Explain equilibrium method, energy method and rayleigh's method to find the natural frequency of vibratory system.

Q-25 Explain undamped free torsional vibrations to find the natural frequency of vibratory system.

Q-26 Determine the natural frequency of the system as shown in figure below.

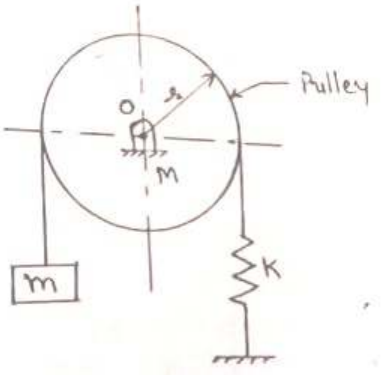

Q-27 Find the natural frequency of a system shown in fig., Take K=1000 N/m, M=10 kg, m = 2 kg, R = 50 mm and r = 30 mm

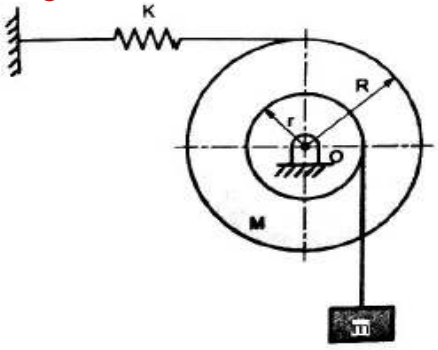

Atmiya University
Rajkot

Q-28 A mass of 1 kg is suspended by a spring passing over the pulley as shown in figure. The system is supported horizontally by a spring of stiffness 1kN/m. Find the natural frequency of vibration of a system, using following data:
Mass of pulley = 10 kg
Radius of pulley = 50 mm
Distance of spring from centre of pulley = 35 mm

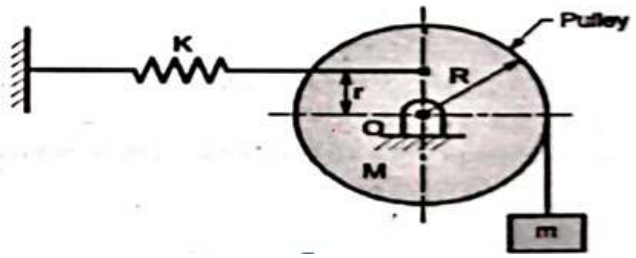

Q-29 Find the natural frequency of oscillation for the roller rolling on the horizontal surface without slipping as shown in figure. The mass of roller is 5 kg, radius of roller is 50 mm and stiffness of spring is 2000 N/m. What would be the new frequency of oscillation, if radius is made 100 mm without changing the mass?

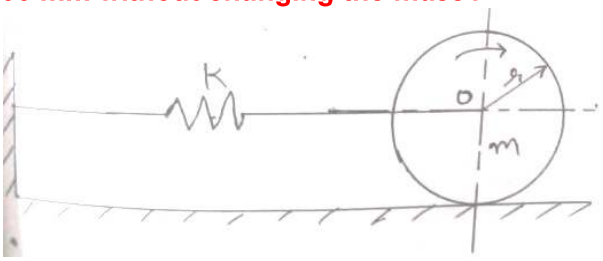

Q-30 Find the natural frequency of oscillation of simple pendulum as shown in figure.

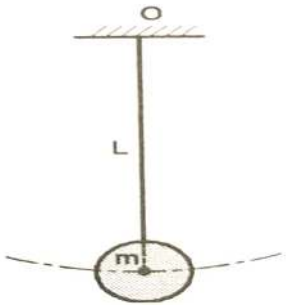

Atmiya University
Rajkot

Q-31 Determine the natural frequency of compound pendulum as shown in figure.

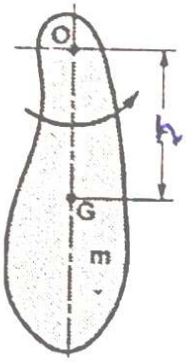

Q-32 Find the differential equation of motion and natural frequency of vibration for the system shown in figure.

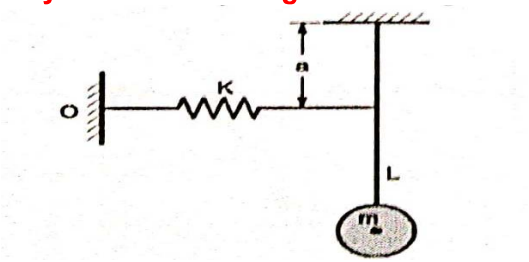

Q-33 Find the natural frequency of the system shown in figure.

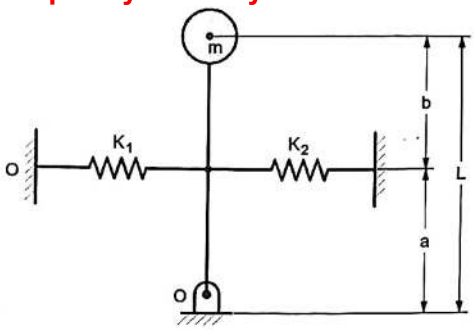

Q-34 Determine the natural frequency of oscillation of a cylindrical disc suspended from a point on its circumference

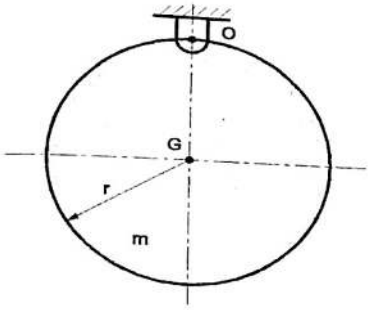

Atmiya University
Rajkot

Q-35 Determine the natural frequency of oscillation of a semicircular disc suspended at its center.

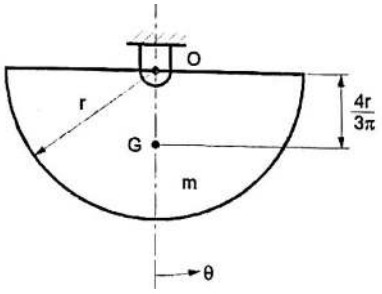

Q-36 Determine the natural frequency of the system as shown in figure.

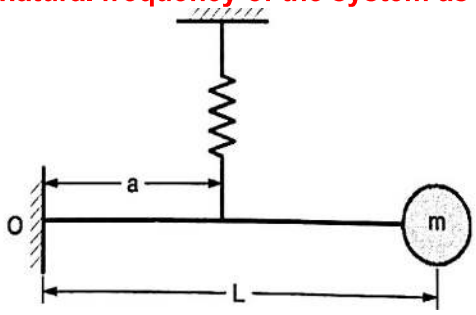

UNIT –III Single Degree of Freedom Systems

Q-37 List the different types of damping method and explain any in brief.

Q-38 Define the following terms:- Damping coefficient, Damping factor, Critically damping coefficient

Q-39 Obtain the equation of motion for damped free vibration with viscous damping.

Q-40 Explain Under damped system, Over damped system and Critically damped system with necessary equation and graph.

Q-41 Obtain an expression for logarithmic decrement. What is the significance of logarithmic decrement?

Q-42 An under damped shock absorber is to be designed for a motor cycle of mass 250 kg such that during a road bump period of vibration is limited to 3 sec and the amplitude of vibration should reduce to one eighteenth in one cycle. Find:
1. The stiffness of spring required
2. The damping coefficient of the shock absorber

Atmiya University Rajkot

Q-43 In a damped vibrating system, the mass having 20 kg makes 40 oscillations in 25 sec. The amplitude of natural vibrations decrease to 1/8th of the initial value after 8 oscillations. Find:
(1) The logarithmic decrement.
(2) The damping factor and damping coefficient.
(3) The spring stiffness.

Q-44 In a damped vibrating system, the mass having 40 kg makes 20 oscillations in 5 sec. The amplitude of natural vibrations decrease to 1/8th of the initial value after 8 oscillations. Find:
(1) The logarithmic decrement.
(2) The damping factor and damping coefficient.
(3) The spring stiffness.

Q-45 In a single degree viscously damped vibrating system, the suspended mass of 16 kg makes 45 oscillation in 27 sec. The amplitude of natural vibration decreases to one fourth of initial value after 5 oscillations. Find:
(1) The logarithmic decrement.
(2) The damping factor and damping coefficient.
(3) The spring stiffness.

Q-46 In a damped free vibration, mass is 2 kg, and the spring stiffness is 100 N/m. It is observed that initial amplitude of 100 mm is reduced to 1 mm in 10 oscillations. Find:
1. Damping constant c.
2. The natural frequency of vibrations.

Q-47 A mass suspended from a helical spring vibrates in a viscous fluid medium whose resistance varies directly with the speed. It is observed that, the frequency of damped vibration is 120 per minute and the amplitude decreases to 20% of its initial value in one complete cycle. Find the frequency of the free undamped vibrations of the system.

Q-48 A mass of 1 kg is suspended on a spring of 9800 N/m and has a dashpot having damping coefficient of 6 N-sec/m. Find the damped natural frequency. Also find the logarithmic decrement and amplitude after 4 cycles, it the initial displacement is 5 mm.

Q-49 A flywheel of mass 20 kg and radius of gyration 0.3 m makes torsional vibrations under a torsion spring of stiffness 5 N-m/rad. A viscous damper is fitted to reduce the amplitude by a factor of 100 over two complete cycles find:
1. Damping factor
2. Damping coefficient
3. Periodic time of damped oscillations.

Q-50 The disc of torsional pendulum has a moment of inertia of 600 kg-m^2 and is immersed in a viscous fluid. The brass shaft attached to it is of 10 cm diameter and 40 cm long. When the pendulum is vibrating, the observed amplitudes on the same side of the rest position for successive cycles are 9^0,$6^0$and 4^0. Determine:
(1) The logarithmic decrement.
(2) The damping torque at unit velocity
(3) The periodic time of observation.
Assume for brass shaft, G = 4.4. □ 10^{10} N/m^2.

Q-51 The disc of torsional pendulum has a moment of inertia of 0.08 kg-m^2 and is immersed in a viscous fluid. The brass shaft attached to it is of 120 mm diameter and 600 mm long. When the pendulum is vibrating, the observed amplitudes on the same side of the rest position for successive cycles are 9^0,$6^0$and 4^0. Determine:
(1) The logarithmic decrement.
(2) The damping torque at unit velocity
(3) The periodic time of observation.
Assume for brass shaft, G = 4.4. □ 10^{10} N/m^2.

Q-52 A spring mass damper system has mass of 80 kg suspended from a spring having stiffness of 1000 N/m. and a viscous damper with a damping coefficient of 80 N-s/m. If the mass is subjected to a periodic disturbing force of 50 N at undamped natural frequency, determine:

1. The undamped natural frequency
2. The damped natural frequency
3. The amplitude of forced vibration
4. The phase difference between force and displacement

Q-53 Explain in brief forced damped vibration with constant harmonic excitation.

Q-54 Define magnification factor or Dynamic magnifier (MF).

Q-55 A spring mass damper system has mass of 80 kg suspended from a spring having stiffness of 1000 N/m. and a viscous damper with a damping coefficient of 80 N-s/m. If the mass is subjected to a periodic disturbing force of 50 N at undamped natural frequency, determine:

1. The undamped natural frequency
2. The damped natural frequency
3. The amplitude of forced vibration
4. The phase difference between force and displacement

Atmiya University
Rajkot

Q-56 A mass of 90 kg is suspended from a spring which deflects by 20mm. If the damping coefficient is 0.25 times the critical damping coefficient, find the natural frequency of damped vibrations and the ratio of successive amplitudes for damped vibrations. If the mass is subjected to a harmonic force of 300 N at frequency equal to 0.75 times the natural undamped frequency, determine the amplitude of forced vibrations and phase angle.

Q-57 What is vibration isolation? What are the various types of isolating materials used for isolation?

Q-58 Explain Force transmissibility and motion transmissibility for force damped vibration with proper diagram.

Q-59 A machine having mass of 100 kg is mounted on 4 springs of combined stiffness 1500 kN/m with an estimated damping factor of 0.25. A piston within the machine has a mass of 2 kg which reciprocates with stroke of 80 mm at a speed of 3000 rpm. Assuming the motion of the piston to be SHM, determine

1. The amplitude of steady state vibrations
2. The force transmitted to the foundation
3. Magnification Factor

Q-60 A machine of mass 1000 kg is acted upon by an external force of 2450 N at 1500 rpm. To reduce the effect of vibration, isolators of rubber having a static deflection of 2 mm under machine weight and an estimated damping factor of 0.2 are used. Determine:

1. Amplitude of vibration of machine
2. Force transmitted to the foundation
3. Phase lag and phase angle between transmitted force and exciting force
4. Speed at which the maximum amplitude of vibration would occur

Q-61 An electric motor is supported on a spring and dashpot. The spring has a stiffness of 5000 N/m and dashpot offers a resistance of 300 N at 2.5 m/sec. The unbalanced mass of 1.5 kg rotates at 50 mm radius and total mass of electric motor is 50 kg. If the motor runs at 340 rpm, Find:

1. The damping factor
2. The amplitude of steady state vibrations
3. The phase angle
4. The resonance speed
5. The amplitude at resonance

Atmiya University Rajkot

UNIT – IV Two and Multi-Degree of Freedom Systems

Q-62 Explain the concept of two degrees of freedom systems with suitable example.

Q-63 Explain free torsional vibration of two rotor system with proper diagram.

Q-64 Derive the expression for torsionally equivalent shaft system.

Q-65 Explain Dunkerley's method to determine the critical speed of shaft carrying multiple rotors.

Q-66 Two rotors, A and B are attached to the ends of the shaft 600 mm long. The mass and radius of gyration of rotor A is 40 kg and 400 mm respectively and that of rotor B are 50 kg and 500 mm respectively. The shaft is 80 mm diameter for first 250 mm, 120 mm for next 150 mm and 100 mm for the remaining length from the rotor A. Assume, the modulus of rigidity of the shaft material is 0.8×10^5 N/mm^2 and find:

1. Position of node on equivalent shaft of diameter 80 mm and on the actual shaft
2. Natural frequency of the torsional vibrations

Q-67 An electric motor running at 1500 rpm drives a pump through gearing. Pump runs at 500 rpm. The motor armature has mass moment of inertia of 400kg $\times$ m^2 and the pump impeller has a mass moment of inertia of 1400 kg $\times$ m^2. The motor shaft is 45 mm diameter and 180 mm long. The pump shaft is having 90 mm diameter and 450 mm length.

1. Find the equivalent system having a uniform shaft diameter of 45 mm and running at 1500 rpm.
2. Find the natural frequency of the system neglecting inertia of gears.

Atmiya University Rajkot

Q-68 In a geared system shown in figure, the mass moment of inertia of rotor A and B are 2 kg □ m^2 and 0.3 kg □ m^2. The gear ratio between rotor B and A is 3. Calculate the node position and natural frequency of torsional oscillations. Ignore the inertia of the gears and shafts. Take modulus of rigidity of shaft material as 80 □ 10^9 N/m^2.

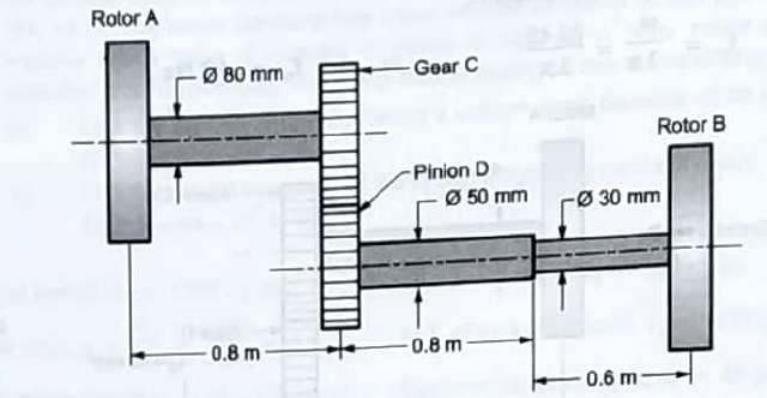

Q-69 A shaft of negligible weight 6 cm diameter and 5 meter long is simply supported at the ends and carries four weights 50 kg each at equal distance over the length of the shaft. Find the frequency of vibration by Dunkerley□s method. Take E = 2 □ 10^6 kg / cm^2.

Q-70 Explain the method to determine the critical speed of shafts carrying single rotor neglecting damping.

UNIT □ V Vibration Measurement and Suspension system

Q-71 Why the measurement of vibration is necessary? Explain the basic features of vibration measurement process. How vibration measuring instruments are classified?

Q-72 List the various types of amplitude measuring instruments? Explain working principle of stylus recording instrument, seismometer and optical recording instrument with neat sketch.

Q-73 Explain the working Principle of Accelerometers.

Q-74 A vibrometer consists of a seismic mass of 1 kg, spring of stiffness 50 N/m and a damping factor of 0.7. The amplitude of displacement shown on vibrometer scale is 10 mm. If the vibrometer is mounted on a machine vibrating at 30 rad/sec, determine the amplitude of vibration of a machine.

Q-75 A vibrometer has a period of free vibration of 2 seconds. It is attached to a machine with a vertical harmonic frequency of 1 Hz. If the vibrometer mass has an amplitude of 2.5 mm relative to the vibrometer frame. What is the amplitude of vibration of machine?

Atmiya University Rajkot

Atmiya University

Faculty of Engineering and Technology

Department of Mechanical Engineering

Semester- 4

Important Questions for CIA - I

Course Name: Design of Transmission Systems

Course Code: 21BTMECC404

Unit – II Design of Bearing	
Q-1	Explain in brief different modes of lubrication in sliding contact bearing with diagram.
Q-2	Obtain the equation of coefficient of friction (petroff's equation) for sliding contact bearing
Q-3	Explain the performance of a hydrodynamic bearing with neat curve of coefficient of friction versus bearing characteristic number.
Q-4	Obtain the relation for viscosity of lubricant for journal bearing.
Q-5	Classify different types of sliding & rolling contact bearing. Explain any one in brief with its applications, advantages and limitations.
Q-6	List and explain the design parameters required in the preliminary stages of bearing design.
Q-7	Compare sliding contact bearing and rolling contact bearing.
Q-8	Explain the static load capacity, dynamic load capacity and equivalent bearing (dynamic) load capacity of rolling contact bearing.
Q-9	Explain the load – life relationship for rolling contact bearing.
Q-10	Explain the causes and remedies of bearing failure.
Q-11	Obtain an equation for static load carrying capacity for rolling contact bearing.

Q-12	**The following data is given for a 360^0 hydrodynamic bearings:** **Radial load : 3.1 kN** **Journal diameter : 50 mm** **Bearing length : 50 mm** **Journal speed : 1440 rpm** **Radial clearance : 50 microns** **Viscosity of lubricant : 25 cP** **Density of lubricant : 860 kg / m^3** **Sp. Heat of lubricant : 1.76 kJ / kg ^{0}C** **Assuming that the total heat generated in the bearing is carried by the total oil flow in the bearing. Find:** **i) Sommerfeld Number** **ii) Minimum oil-film thickness** **iii) The coefficient of friction** **iv) The power lost in friction** **v) The total flow rate of lubricant in litre/minute** **vi) Side leakage**
Q-13	**The following data is given for a full hydrodynamic bearing used for electric motor:** **Radial load = 1200 N** **Journal speed = 1440 rpm** **Journal diameter = 50 mm** **Static load on the bearing = 350 N** **The values of surface roughness of the journal and the bearing are 2 and 1 micron respectively. The minimum oil film thickness should be five times the sum of surface roughness of the journal and the bearings. Determine** **(i) Length of the bearing** **(ii) Radial clearance** **(iii) Minimum oil film thickness** **(iv) Viscosity of lubricant** **(v) Flow of lubricant.** **Select suitable oil for this application assuming the operating temperature as 65□C.**

Atmiya University
Rajkot

Q-14	The following data is given for a 360 hydrodynamic bearing: radial load = 10 kN journal speed = 1440 rpm unit bearing pressure = 1000 kPa clearance ratio (r/c) = 800 viscosity of lubricant = 30 mPa s Assuming that the total heat generated in the bearing is carried by the total oil flow in the bearing, Find: (i) dimensions of bearing (ii) coefficient of friction (iii) power lost in friction (iv) total flow of oil (v) side leakage (vi) temperature rise
Q-15	Single-row deep groove ball bearing is subjected to a pure radial force of 3 kN from a shaft that rotates at 600 rpm. The expected Life L10h of the bearing is 30000 h. The minimum acceptable diameter of the shaft is 40 mm. Select a suitable ball bearing for this application.
Q-16	A single-row deep groove ball bearing is subjected to a radial force of 8 kN and a thrust force of 3 kN. The shaft rotates at 1200 rpm. The expected life L10h of the bearing is 20000 h. The minimum acceptable diameter of the shaft is 75 mm. Select a suitable ball bearing for this application.
Q-17	A single-row deep groove ball bearing No. 6002 is subjected to an axial thrust of 1000 N and a radial load of 2200 N. Find the expected life that 50% of the bearings will complete under this condition.
Q-18	A single-row deep groove ball bearing has a dynamic load capacity of 40500 N and operates on the following work cycle: (i) Radial load of 5000 N at 500 rpm for 25% of the time (ii) Radial load of 10000 N at 700 rpm for 50% of the time; and (iii) Radial load of 7000 N at 400 rpm for the remaining 25% of the time. Find the expected life of the bearing in hours.
Q-19	A ball bearing is operating on a work cycle consisting of three parts a radial load of 3000 N at 1440 rpm for one quarter cycle, a radial load of 5000 N at 720 rpm for one half cycle, and radial load of 2500 N at 1440 rpm for the remaining cycle. The expected life of the bearing is 10 000 h. Calculate the dynamic load carrying capacity of the bearing.

Atmiya University
Rajkot

Q-20	**A single-row deep groove ball bearing is subjected to a 30 second work cycle that consists of the following two parts:** *Part I* / *Part II* *duration (s)* 10 / 20 *radial load (kN)* 45 / 15 *axial load (kN)* 12.5 / 6.25 *speed (rpm)* 720 / 1440 **The static and dynamic load capacities of the ball bearing are 50 and 68 kN respectively. Calculate the expected life of the bearing in hours.**
Q-21	**A single-row deep groove ball bearing is subjected to a radial force of 8 kN and a thrust force of 3 kN. The values of X and Y factors are 0.56 and 1.5 respectively. The shaft rotates at 1200 rpm. The diameter of the shaft is 75 mm and Bearing No. 6315 (C =112 000 N) is selected for this application.** **(i) Estimate the life of this bearing, with 90% reliability.** **(ii) Estimate the reliability for 20 000 h life.**
Q-22	**Single-row deep groove ball bearing is used to support the lay shaft of a four speed automobile gear box. It is subjected to the following loads in respective speed ratios:** *Gear* / *Axial load (N)* / *Radial load (N)* / *% time engaged* First gear 3250 4000 1% Second gear 500 2750 3% Third gear 50 2750 21% Fourth gear Nil Nil 75% **The lay shaft is fixed to the engine shaft and rotates at 1750 rpm. The static and dynamic load carrying capacities of the bearing are 11600 and 17600 N respectively. The bearing is expected to be in use for 4000 hours of operation. Find out the reliability with which the life could be expected.**
Unit – I Design of flexible machine elements	
Q-23	**Explain the different types of belt drive used in industry. Also write the advantages and disadvantages of belt drive over other drives.**
Q-24	**Obtain the equation for length of open belt drive with neat sketch.**
Q-24	**Show that equation for length of cross belt drive is given by** $L = \pi/2 (d_1 + d_2) + 2x + (d_1+d_2)^2/4x$
Q-25	**Explain the selection of flat belt from manufacturer's catalogue with necessary equation.**

Atmiya University Rajkot

Q-26	**Write step by step procedure for the selection of V - belt giving all governing equations.**
Q-27	**Explain the construction of roller chain with a neat sketch.**
Q-28	**Explain the geometric relationships for roller chain with suitable equation.**
Q-29	**It is required to select a flat belt drive for a compressor running at 720 rpm, which is driven by a 25 kW, 1440 rpm motor. Space is available for a centre distance of 3 m. The belt is open-type. the load correction factor for the compressor is 1.3. Selecting a HI-SPEED belt.**
Q-30	**It is required to design a V-belt drive to connect a 7.5 kW, 1440 rpm induction motor to a fan, running at approximately 480 rpm, for a service of 24 h per day. Space is available for a centre distance of about 1 m.**
Q-31	**It is required to select a Vbelt drive to connect a 15 kW, 2880 rpm normal torque A.C. motor to a centrifugal pump, running at approximately 2400 rpm, for a service of 18 hours per day. The centre distance should be approximately 400 mm. Assume that the pitch diameter of the driving pulley is 125 mm.**
Q-32	**Explain the step by step design procedure for selection of roller chain with necessary equation.**
Q-33	**Explain the uses and construction of wire ropes.**
Q-34	**The layout of a leather belt drive transmitting 15 kW of power is shown in figure. The centre distance between the pulleys is twice the diameter of the bigger pulley. The belt should operate at a velocity of 20 m/s approximately and the stresses in the belt should not exceed 2.25 N/mm^2. The density of leather is 0.95 g/cc and the coefficient of friction is 0.35. The thickness of the belt is 5 mm. Find:** **(i) The diameter of pulleys** **(ii) The length and width of the belt** **(iii) The belt tensions**

3-Ply	25	40	50	63	76					
4-Ply	40	44	50	63	76	90	100	112	125	152
5-Ply	76	100	112	125	152					
6-Ply	112	125	152	180	200					

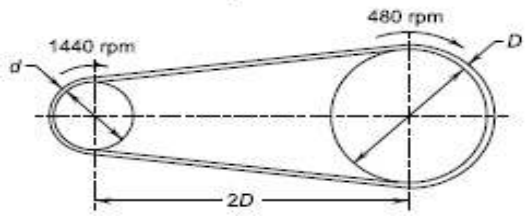

Atmiya University
Rajkot

Q-35	**A chain drive is to be used to transmit 5 kW power from an electric motor running at 1000 rpm to a machine running at 500 rpm. The service conditions involve light shock.** **Assume service factor as 1.3, tooth correction factor as 1, multiple strand factor as 1 for the given application.** **1. Select a standard roller chain** **2. Determine the pitch circle diameters of driving and driven sprockets** **3. Determine the length of the chain** **4. Specify the correct centre distance between the axes of sprockets**

Atmiya University
Rajkot

Atmiya University

Faculty of Engineering & Technology

Department of Mechanical Engineering

Semester- 4

Important question for CIA - II

Course Name: Design of Transmission Systems

Course Code: 21BTMECC404

Unit – III Design of Gears	
Q-1	List the classification of gear. Explain the practical application of any one of the gear with proper justification.
Q-2	Explain beam strength of spur gear tooth with suitable equations and neat sketch.
	Explain buckingham's theory for wear strength of spur gear tooth.
Q-3	Explain the following terms 1. Interference 2. Undercutting 3. Backlash 4. Pressure angle 5. Module 6. Pitch circle diameter 7. Addendum 8. Circular pitch 9. Tooth space
Q-4	Show that the common normal to the tooth profile at the point of contact should always pass through a fixed point, called the pitch point, in order to obtain a constant velocity ratio.
Q-5	Explain in brief about different types of material used for gear.
Q-6	List the difference between involute and cycloidal profile in gear.
Q-7	With the help of neat sketch, state and explain the component of force acting on helical gears.
Q-8	Explain different types of gear tooth failures, causes and their possible remedies.
Q-9	What are the advantages and disadvantages of helical gears?

Q-10	Explain beam strength of helical gear tooth with suitable equations and neat sketch.
Q -11	Explain buckingham's theory for wear strength of helical gear tooth.
Q -12	Explain the following helical gear terminology with equation. 1. Helix angle 2. Transverse circular pitch & transverse module 3. Normal circular pitch & normal module 4. Axial Pitch 5. Transverse pressure angle 6. Normal pressure angle 7. Face width 8. Speed ratio or gear ratio 9. Centre distance 10. Tooth Proportions
Q -13	A pair of helical gears consists of 18 teeth pinion meshing with 45 teeth gear. The normal module is 5, while the normal pressure angle is 20°. If the helix angle is 23°, Find: 1. Transverse module 2. Transverse pressure angle 3. Axial Pitch 4. Pitch circle diameter of pinion and gear 5. Centre distance 6. Addendum and dedendum circle diameters of the pinion 7. The gear ratio

Atmiya University
Rajkot

Q-14	**A spur pinion having 21 teeth to be made of plain carbon steel 55C8 (S_{ut} = 720 N/mm^2) is to mesh with a gear to be made of plain carbon steel 40C8 (S_{ut} = 580 N/mm^2). The gear pair is required to transmit 22 kW power form IC engine running at 1000 rpm to a machine running at 300 rpm. The starting torque required is 200% of the rated torque, while the load distribution factor is 1.5. The factor of safety required is 1.5. The face width is ten times the module and the tooth system is 20° full depth involute. The gears are to be machined to meet the specifications of grade 6. The gear and pinion are to be case hardened to 400 BHN & 450 BHN respectively. The deformation factor C for gear pair is 11500e. Design the gear pair by using the dynamic factor K_v = 6/6 + V and buckingham's equation for dynamic load.** **Use the following relations:** **Y = 0.484 − (2.87/z) for 20° full depth involute** **K = 0.16 [BHN/100]^2 N/mm^2** For grade 6, e = 8.0 + 0.63 [m + 0.25√d], µm **Take application factor as 2.** **Recommended series of module** Choice-1 Preferred: 1.0, 1.25, 1.5, 2.0, 2.5, 3.0, 4.0; 5.0, 6.0, 8.0, 10, 12, 16, 20 Choice-2: 1.125, 1.375, 1.75, 2.25, 2.75, 3.5, 4.5; 5.5, 7, 9, 11, 14, 18
Q-15	**A pair of parallel helical gears consists of a 20 teeth pinion meshing with a 100 teeth gear. The pinion rotates at 720 rpm. The normal pressure angle is 20°, while the helix angle is 25°. The face width is 40 mm and the normal module is 4 mm. The pinion is made of plain carbon steel 55C8 (S_{ut} =720 N/mm^2) while the gear is made of plain carbon steel 40C8 (S_{ut} = 580 N/mm^2).The pinion and gear are heat treated to a surface hardness of 350 BHN and 300 BHN. The service factor and the factor of safety are 1.5 and 2 respectively. Assume that the velocity factor accounts for the dynamic load and calculate the power transmitting capacity of gears.** **Use the following relations:** $Y' = 0.484 - \frac{2.87}{z'}$ $K_v = \frac{5.6}{5.6 + \sqrt{V}}$ $K = 0.16\left[\frac{BHN}{100}\right]^2, N/mm^2$
Q -16	**Refer spur gear example on slide number 27 of spur gear design theory and examples.**

Atmiya University Rajkot

Q -17	Refer spur gear example on slide number 34 of spur gear design theory and examples.
Q -18	Refer spur gear example on slide number 38 of spur gear design theory and examples.
Q -19	Refer helical gear example on slide number 35 of helical gear design theory and examples.
Q - 20	Refer helical gear example on slide number 40 of helical gear design theory and examples.
Unit IV Design of Gearbox	
Q - 20	What is gear box? Explain the need of using gearbox. Or Explain the purpose of using gear boxes in transmission systems.
Q - 21	List and explain the different types of gearbox used in power transmission systems.
Q - 22	What are the basic considerations in design of multi speed gear box?
Q - 23	Compare between Structural diagram and Speed (Ray) Diagram.
Q - 24	Explain the procedure of designing multi speed gear box for machine tool application.
Q - 25	Why arithmetic & harmonic progressions are not suitable for stepped regulation of speeds in machine tool gear boxes?
Q - 26	Explain the need of using multispeed gear box in machine tools.
Q - 27	Draw the structure and speed diagram for a gear box having operating speed range from 56 rpm to 1000 rpm. Use R4 series, with standard spindle speed. The gear box is connected to a motor driven by a pair of pulleys. Assume the motor speed to be 1440 rpm. Draw the gear box layout diagram.
Unit V Design of IC Engine Components	
Q-28	What is the function of engine cylinder?
Q-29	List the difference between CI & SI Engine.
Q-30	What are the desirable properties of cylinder materials?

Atmiya University Rajkot

Q-31	Explain in brief the bore and length of cylinder for IC engine with suitable equations.
Q-32	Explain in brief thickness of cylindrical wall in engine cylinder with appropriate equations.
Q-33	Explain the stresses generated in cylinder wall for IC engine with proper equation.
Q-34	The cylinder of a four-stroke diesel engine has the following specifi cations: Cylinder bore = 150 mm Maximum gas pressure = 3.5 MPa Cylinder material = Grey cast iron FG 200 (Sut = 200 N/mm2) Factor of safety = 5 Poisson's ratio = 0.25 Find the thickness of the cylinder wall. Also, find the apparent and net circumferential and longitudinal stresses in the cylinder wall.
Q-35	The cylinder of a four-stroke diesel engine has the following specifi cations: Cylinder bore = 130 mm Maximum gas pressure = 3.5 MPa Cylinder material = Grey cast iron FG 200 (S_{ut} = 260 N/mm^2) Factor of safety = 6 Poisson's ratio = 0.25 Find the thickness of the cylinder wall. Also, find the apparent and net circumferential and longitudinal stresses in the cylinder wall.

Atmiya University
Rajkot

Faculty of Engineering and Technology
Department of Computer Engineering

Subject: - Information & Network Security (21BTCECC701)

Question Bank for 1 Mark

Unit:1

1. What is the key feature of symmetric encryption?
2. Name the two main components in the symmetric cipher model.
3. What is the key feature of symmetric encryption?
4. Name the two main components in the symmetric cipher model.
5. What is cryptography?
6. What are the two main types of cryptographic techniques?
7. What is cryptanalysis?
8. Name one type of cryptographic attack.
9. What is a ciphertext-only attack?
10. What is substitution in cryptography?
11. What is transposition in cryptography?
12. Which technique does the Caesar cipher use: substitution or transposition?

Unit:2

1. What is a public key cryptosystem?
2. Name one application of public key cryptosystems.
3. In a public key cryptosystem, what are the two types of keys used?
4. What is one requirement of a secure public key cryptosystem?
5. What does cryptanalysis in the context of public key cryptosystems involve?
6. Which property ensures that it is computationally infeasible to derive the private key from the public key?
7. Who developed the RSA algorithm?
8. What does RSA stand for?
9. What is the mathematical basis of the RSA algorithm?
10. In RSA, what is the product of two large prime numbers called?
11. Which mathematical operation is primarily used in RSA encryption and decryption?
12. What is the public key in RSA composed of?
13. What is the private key in RSA composed of?

Atmiya University

Unit:3

1. What is a cryptographic hash function?
2. What is one key property of a cryptographic hash function?
3. What is the output of a cryptographic hash function called?
4. ame one application of hash functions.
5. How are hash functions used in digital signatures?
6. What role do hash functions play in data integrity?
7. What is the primary requirement of a hash function in cryptography?
8. What is meant by the term "collision resistance" in hash functions?
9. Why must a hash function be computationally efficient?

Unit:4

1. What is a digital signature?
2. Name one property of a digital signature.
3. Why is non-repudiation important in digital signatures?
4. What ensures the integrity of a digital signature?
5. What does PKI stand for?
6. Name one main component of Public Key Infrastructure (PKI).
7. What is the purpose of a Certificate Authority (CA) in PKI?
8. Why is PKI important for secure communication?
9. What is the purpose of key management?
10. Name one method of distributing cryptographic keys.
11. Why is secure key distribution essential in cryptography?

Unit:5

1. What is one common threat to web security?
2. Name one approach to mitigating web security threats.
3. What is the main goal of web security?
4. What does PGP stand for?
5. Who developed PGP?
6. What does S/MIME stand for?
7. What is the primary function of PGP?
8. Which cryptographic techniques does S/MIME use?
9. What is the primary purpose of a firewall?
10. What is peephole optimization in the context of firewalls?
11. How does peephole optimization improve firewall performance?

12. Name one type of firewall.

Atmiya University

Faculty of Engineering and Technology
Department of Computer Engineering

Subject: - Information & Network Security (21BTCECC701)

Question Bank

Unit-1	Marks
Dimensions of cryptography and brute force attack.	4
Types of Cipher (ALL cipher substitution and transposition)	4
Difference between symmetric key and asymmetric key cryptography.	4
Explain steganography.	7
Design principle of block cipher.	7
Explain OSI Security Model.	7
Unit-2	
Explain IDEA algorithm.	4
Explain DES algorithm OR single round in DES algorithm. Also explain avalanche effect.	4
public key and private key model/ structure.	4
Explain RC5 algorithm.	4
Explain Blow Fish Algorithm.	4
Explain RC4 algorithm	7

Atmiya University

Modes of Algorithm	7
ALL Types of cipher, ALL definition (like block cipher, stream cipher, diffusion, confusion) , ALL sum (Encryption and decryption techniques sum).	7
Explain Feistel structure.	7
Explain Diffie Hellman key exchange algorithm with example. Explain man-in-middle attack in key exchange algorithm.	7
Explain RSA algorithm with example	7
Unit-3	
Explain MD5.	4
Explain Hash function and its requirement .	4
Explain basic hash methods.	4
Explain Digital Signature.	4
Explain Digital Envelop.	7
Explain Digital Signature illustration.	7
Explain SHA-I.	7
Explain SHA-512.	7
Unit-4	
Explain Private key distribution methods.	4

Atmiya University

Explain Public Key distribution methods.	4
Explain KDC.	4
Simple Protocol using KDC.	4
Needham-Schroeder Protocol.	4
Otway-Rees Protocol.	4
Explain Controlled Trusted Center.	7
Explain Certification Authority.	7
Explain X.509.	7
Explain Digital Certificate.	7
Explain Public Key Infrastructure.	7
Explain Kerberos.	7
Explain MAC.	7
Explain HMAC.	7
Unit-5	
RSA Digital signature Scheme.	4
Principles of Digital signature.	4
ElGamal Digital Signature Scheme.	4

Atmiya University

Schnorr Digital Signature Scheme.	4
Digital Signature Standard (NIST Digital Signature).	4
Elliptic Curve Digital Signature Scheme.	4
Message Digest Demand or Message Digest Rules.	7
Explain firewall with its all types	7
Explain SSL with all layers	7
Explain SSL Handshake protocol with diagram.	7
Explain SSL Record protocol.	7
Explain ESP Header.	7
Explain AH with diagram.	7
Explain Dual Signature in detail.	7
Explain TLS.	7
Explain Secure Electronics Transection.	7

Atmiya University

MCI(21UFEDE502)

Chapter 1: Introduction To 8-bit Microcontroller

Short Questions (1 Mark)

1. How many bytes is 24 kilobytes?
2. What does "RAM" stand for? How is it used in computer systems?
3. What does "ROM" stand for? How is it used in computer systems?
4. Why is RAM called volatile memory?
5. List the three major components of a computer system.
6. What does "CPU" stand for? Explain its function in a computer.
7. List the three types of buses found in computer systems and state briefly the purpose of each type of bus.
8. State which of the following is unidirectional and which is bidirectional: (a) data bus (b) address bus
9. If an address bus for a given computer has 16 lines, what is the maximum amount of memory it can access?
10. What is the purpose of the program counter?
11. What is the advantage of Flash memory over the other kinds of ROM?
12. The ATmega32 has __ pins for I/O.
13. The ATmega32 has __ bytes of on-chip program ROM.
14. The ATmega32 has __ bytes of on-chip data RAM.
15. What are the main differences between the ATmegal6 and the ATmega32?
16. The flag register in the A YR is called the ___
17. What is the size of the flag register in the AVR?
18. AVR is a __ -bit microcontroller.
19. The general purpose registers are __ bits wide.

5 Marks Questions

1. Compare Harvard and Princeton architecture.

Atmiya University

2. What is the difference between microprocessor and microcontrollers explain in detail.
3. Explain the I/O registers associated with the ATmega32 EEPROM.
4. Give the overview of the AVR family.

7 Marks Questions

1. Draw the simplified block diagram of the AVR microcontroller and discuss about the various features of AVR microcontroller.
2. Explain the data RAM of the AVR microcontroller with diagram.
3. Explain the AVR status register in detail.

Chapter 2: AVR Programming in C

Short Questions (1 Mark)

1. There are a total of __ ports in the ATmega32.
2. True or false. All of the ATmega32 ports have 8 pins.
3. To make Port B an output port, we must place in register __ _
4. To make Port B an input port, we must place in register __ _
5. The ATmega32 has a DIP package of __ pins.
6. In ATmega32, how many pins are assigned to Vcc and GND?
7. In the ATmega32, how many pins are designated as I/0 port pins?
8. How many pins are designated as PORTA in the 40-pin DIP package and what are their numbers?
9. How many pins are designated as PORTB in the 40-pin DIP package and what are their numbers?
10. 6. How many pins are designated as PORTC in the 40-pin DIP package and what are their numbers?
11. How many pins are designated as PORTO in the 40-pin DIP package and what are their numbers?
12. Upon reset, all the bits of ports are configured as __ (input, output).
13. Explain the role of DDRx and PORTx in 1/0 operations.

Atmiya University

14. Write a program to get 8-bit data from PORTC and send it to PORTB and PORTD.
15. Which pins are for RxD and TxD?

5 Marks Questions

1. Write a program to toggle all the bits of PORTB and PORTC continuously using 0xAA and 0x55 (b) using the COM instruction.
2. Write a program to toggle PB2 and PBS continuously without disturbing the rest of the bits.
3. Write a program to toggle PD3, PD7, and PCS continuously without disturbing the rest of the bits.
4. Write a program to monitor bit PC3. When it is HIGH, send OxSS to PORTD.
5. Write a program to monitor the PB7 bit. When its LOW, send $SS and $AA to PORTC continuously.
6. Write a program to monitor the PAO bit. When it is HIGH, send $99 to PORTB. If it is LOW, send $66 to PORTB.
7. Write a program to monitor the PBS bit. When it is HIGH, make a LOW-to HIGH-to-LOW pulse on PB3.
8. Write a program to get the status of PC3 and put it on PC4.
9. Create a flowchart and write a program to get the statuses of PD6 and PD7 and put them on PCO and PC7, respectively.
10. Write a program to monitor the PBS and PB6 bits. When both of them are HIGH, send $AA to PORTC; otherwise, send $SS to PORTC.
11. Write a program to monitor the PBS and PB6 bits. When either of them is HIGH, send $AA to PORTC; otherwise, send $SS to PORTC.

7 Marks Questions

1. Explain the I/O port structure in the AVR controller.

Atmiya University

2. Write an AVR C Program to send the ASCII value of word "ATMIYA" on Port C.
3. Write an AVR C Program to take input from PORTB. Perform logical X-OR operation between given input value and 0xAA. Give the answer to PORTA.
4. Write an AVR C Program to continuously give 0xF0 and 0x0F to PORTB. There should be delay of 500ms between each value.
5. Write an AVR C Program to get a value from Port A. If the value is positive send it to Port B otherwise send it to Port D.
6. Write an AVR C Program to continuously monitor PORTA. If the value is Positive Blink the LEDs connected to bit Position D0, D2, D4 and D6 of PORTC. Otherwise blink the LEDs connected to bit position D1, D3, D5 and D7 of PORTC.
7. A door sensor is connected to bit1 of PORT B. When door is open it generates LOW. Write an AVR C program to Turn on the LED connected to bit5 of PORTB when door is closed. Otherwise turn off the LED.
8. Write an AVR C Program to generate the LED pattern as following continuously. Only LED on D0 position is ON and rest of all OFF, D1 is ON and others are OFF and so on. When LED on D7 is ON, it should get turned ON in reverse order.

Chapter 3: Peripheral Interfacing

Short Questions (1 Mark)

1. The RS pin is a ___ (input, output) pin for the LCD.
2. The E pin is an (input, output) pin for the LCD.
3. The E pin requires an (H-to-L, L-to-H) pulse to latch in information at the data pins of the LCD.
4. For the LCD to recognize information at the data pins as data, RS must be set to __ (high, low).
5. The LCD discussed in this section has __ pins.
6. Describe the function of pins E, R/W, and RS in the LCD.
7. What is the difference between the V cc and VEE pins on the LCD?

Atmiya University

8. “Clear LCD" is a _____ (command code, data item) and its value is _hex.
9. What is the hex value of the command code for "display on, cursor on"?
10. Give the state of RS, E, and R/W when sending a command code to the LCD.
11. Give the state of RS, E, and R/W when sending data character 'Z' to the LCD.
12. What is the internal Vref of the ATmega32?
13. The AID of AVR is a(n) -bit converter.
14. True or false. The AID of AVR has pins for DouT·
15. True or false. ND in the AVR is an off-chip module.
16. Find the step size for an AVR ADC, ifYrer=2.56 Y.
17. For problem 5, calculate the DO-D9 output if the analog input is: (a) 0.7 V, and (b) 1 V.
18. How many single-ended inputs are available in the ATmega32 ADC?
19. Calculate the first conversion time for ADPS0-2 = 111 and Fosc = 4 MHz.
20. In AVR, the ADC requires an input clock frequency less than __ _
21. Which bit is used to poll for the end of conversion?

5 Marks Questions

1. Draw interfacing diagram of LEDs (8 LEDs) connected with the port B of ATmega32. Write program to Turn ON LEDs, if input at port A is positive otherwise turn OFF LEDs.
2. Draw and explain interfacing diagram of stepper motor with port B of Atmega32.
3. Explain the working of relay. Draw and explain the interfacing diagram of SPDT relay interfaced with AVR microcontroller.
4. Explain working of optoisolator. Draw and explain interfacing diagram of optoisolator with port B of Atmega32.
5. **E**xplain the features of ATmega32 ADC.
6.
7. Write a program to read ATmega32 ADC Using Polling Method in C.

Atmiya University

7 Marks Questions

1. Draw the diagram of the seven segment interfacing with the ATmega32 and write program to display 9 on the seven segment display.
2. Draw and explain interfacing diagram of LCD with Atmega32.
3. Draw and explain interfacing diagram of DC motor with port C of Atmega32. Write the program to rotate DC motor continuously in clockwise and counter clockwise direction with delay of 500 ms.
4. Explain the ADMUX and ADCSRA registers of ATmega32 ADC.

Chapter 4: Timer and its Programming

Short Questions (1 Mark)

1. How many timers do we have in the ATmega32?
2. True or false. Timer0 is a 16-bit timer.
3. True or false. Timer1 is a 16-bit timer.
4. True or false. The TCCR0 register is a bit-addressable register.
5. In Normal mode, when the counter rolls over it goes from __ to __ .
6. In CTC mode, the counter rolls over when the counter reaches _.
7. Which resource provides the clock pulses to AVR timers if CS02:00 = 6?
8. Timer0 supports the highest prescaler value of __ _
9. Timer1 supports the highest prescaler value of __ _
10. The TCCR0 register is a(n) _-bit register.
11. What is the job of the TCCRO register?
12. True or false. TCCR0 is a bit-addressable register.
13. True or false. TIFR is a bit-addressable register.
14. Find the TCCRO value for Normal mode, no prescaler, with the clock coming from the AVR's crystal.
15. Which register holds the TOVO (timer overflow flag) and TOV1 bits?

5 Marks Questions

Atmiya University

1. Explain TCCR0 register of the Timer0 of ATmega32.
2. Explain TIFR register of ATmega32 microcontroller.

7 Marks Questions

1. Draw the block diagram of the timer0. Explain the role of the various registers and flags associated with timer0 of the ATmega32 microcontroller.
2. Write a C program to send values 0x55 and 0xAA continuously on port c of ATmega32 with delay of 70µs. Use timer0, Normal mode and no prescaler options to generate delay.
3. Draw and explain simplified block diagram of timer1 of Atmega32 microcontroller.

Chapter 5: Wave generation and PWM Programming

Short Questions (1 Mark)

1. True or false. In ATmega32, Timer0 has a wave generator.
2. True or false. CTC mode can be used to generate square waves.
3. True or false. To generate waves the OCO pin must be configured as an input pin.
4. Give the pin number used by the wave generator of Timer0 in ATmega32.
5. True or false. In ATmega32, Timer 1 has three waveform generators.
6. True or false. We can associate each of the pins with each of the waveform generators.
7. True or false. In CTC modes we cannot change the frequency of the generated wave.
8. True or false. The ATmega32 has only one 8-bit timer.
9. True or false. In the ATmega32, Timer0 has a 16-bit register accessible as TCNT0L and TCNT0H.
10. True or false. Each waveform generator has a single pin.
11. Give the pin used for Timer2 waveform generator in the ATmega32.

Atmiya University

12. True or false. In the ATmega32, Timer I has two waveform generator channels.
13. Give the number of waveform generators in the ATmega32.

5 Marks Questions

1. Explain basic registers of timer0.
2. Using Timer0, no prescaler, and CTC mode, write a program that generates a square wave with a frequency of 5 kHz. Assume XTAL = 1MHz.
3. Using Timer1, no prescaler, and CTC mode, write a program that generates a square wave with a frequency of 1 kHz. Assume XTAL = 8 MHz.
4. Using Timer1, no prescaler, and CTC mode, write a program that generates a square wave with a frequency of 5 kHz. Assume XTAL = 8 MHz.
5. Using Timer1 and CTC mode, write a program that generates a square wave with a frequency of 50 Hz. Assume XTAL = 8 MHz.
6. Using Timer1 and CTC mode, write a program that generates a square wave with a frequency of 20 Hz. Assume XTAL = 16 MHz.

7 Marks Questions

1. Draw and explain block diagram of waveform generator in AVR controller.
2. Explain with necessary figures Generating square waves using 8 bit timer in normal mode.
3. Explain with necessary figures Generating square waves using 8 bit timer in CTC mode.
4. Explain with necessary figures the generation of the rectangular waveform in the AVR controller using fast PWM mode.

Atmiya University

5. Write a program to monitor the status of PA7 pin of AVR controller. If PA7 is 1 DC motor controlled through the PB0 bit should move with 25% duty cycle else DC motor should move with 50% duty cycle.

Atmiya University

Faculty of Engineering and Technology
Department of Computer Engineering

B.Tech. SEM. VII

Subject: Mobile Computing and Wireless Network(21BTCECL703)

Question Bank

Unit: 1

Sr. No.	Question	Mark
1	What is mobile computing?	1
2	What is the main difference between analog and digital data transmission?	1
3	Name one limitation of mobile computing.	1
4	What type of propagation mode is commonly used in Wi-Fi networks?	1
5	Which type of switching is more efficient for continuous data transmission, circuit switching or packet switching?	1
6	What type of transmission medium does fiber optic cable use?	1
7	What is an example of an analog signal?	1

Unit: 2

Sr. No.	Question	Mark
1	What problem does the "hidden terminal" issue refer to in wireless networks?	1
2	What is the primary goal of Mobile IP?	1
3	What is the purpose of handover management in mobile networks?	1
4	What is the role of "tunneling" in Mobile IP?	1
5	What does DHCP stand for?	1
6	What does Snooping TCP aim to optimize in mobile networks?	1

Unit: 3

Sr. No.	Question	Mark
1	What does GSM stand for?	1
2	Which type of multiple access technique does GSM use?	1
3	In GSM, what is the main purpose of the Home Location Register (HLR)?	1
4	What is "handover" in mobile communication?	1
5	What does UMTS stand for?	1
6	UMTS is often referred to as which generation of mobile communication technology?	1

Atmiya University

Unit: 4

Sr. No.	Question	Mark
1	What does "ad-hoc" mean in the context of wireless networks?	1
2	In an ad-hoc network, is there a centralized infrastructure?	1
3	What does VANET stand for?	1
4	What is the primary purpose of VANETs?	1
5	Name one advantage of using MANETs.	1
6	How does the mobility pattern of VANETs differ from that of MANETs?	1
7	Name one advantage of using MANETs.	1

Atmiya University

Unit: 5

Sr. No.	Question	Mark
1	Name one of the four main components of an Android application.	1
2	Which component in Android is used to display user interfaces?	1
3	What is the main purpose of the Android manifest file?	1
4	Name one type of layout in Android.	1
5	Which layout arranges views in a single row or column?	1
6	What is a "View" in Android?	1
7	What is the primary purpose of an Intent in Android?	1
8	Which input control in Android allows users to pick a date or time?	1

Atmiya University

Faculty of Engineering and Technology
Department of Computer Engineering

B.Tech. SEM. VII

Subject: Mobile Computing and Wireless Network(21BTCECL703)

Question Bank

Unit: 1

Sr. No.	Question	Mark
1	What is mobile computing?	1
2	What is the main difference between analog and digital data transmission?	1
3	Name one limitation of mobile computing.	1
4	What type of propagation mode is commonly used in Wi-Fi networks?	1
5	Which type of switching is more efficient for continuous data transmission, circuit switching or packet switching?	1
6	What type of transmission medium does fiber optic cable use?	1
7	What is an example of an analog signal?	1

Unit: 2

Sr. No.	Question	Mark
1	What problem does the "hidden terminal" issue refer to in wireless networks?	1
2	What is the primary goal of Mobile IP?	1
3	What is the purpose of handover management in mobile networks?	1
4	What is the role of "tunneling" in Mobile IP?	1
5	What does DHCP stand for?	1
6	What does Snooping TCP aim to optimize in mobile networks?	1

Unit: 3

Sr. No.	Question	Mark
1	What does GSM stand for?	1
2	Which type of multiple access technique does GSM use?	1
3	In GSM, what is the main purpose of the Home Location Register (HLR)?	1
4	What is "handover" in mobile communication?	1
5	What does UMTS stand for?	1
6	UMTS is often referred to as which generation of mobile communication technology?	1

Atmiya University

Unit: 4

Sr. No.	Question	Mark
1	What does "ad-hoc" mean in the context of wireless networks?	1
2	In an ad-hoc network, is there a centralized infrastructure?	1
3	What does VANET stand for?	1
4	What is the primary purpose of VANETs?	1
5	Name one advantage of using MANETs.	1
6	How does the mobility pattern of VANETs differ from that of MANETs?	1
7	Name one advantage of using MANETs.	1

Atmiya University

Unit: 5

Sr. No.	Question	Mark
1	Name one of the four main components of an Android application.	1
2	Which component in Android is used to display user interfaces?	1
3	What is the main purpose of the Android manifest file?	1
4	Name one type of layout in Android.	1
5	Which layout arranges views in a single row or column?	1
6	What is a "View" in Android?	1
7	What is the primary purpose of an Intent in Android?	1
8	Which input control in Android allows users to pick a date or time?	1

Atmiya University

Modern network(21BTCECL703)
Question bank for 1 mark

UNIT-1	
1	What is optical network?
2	What is computer network?
3	Define simplex communication.
4	Define half duplex communication.
5	Define duplex communication.
6	List advantage of optical communication.
7	List disadvantage of optical communication.
8	List disadvantage of first generation optical communication network.
9	List disadvantage of second generation optical communication network.
10	What is communication?
UNIT-2	
11	What is SONET?
12	What is SDH?
13	Why we used SONET?
14	Why we used SDH?
15	What is LINE in SONET?
16	What is PATH in SONET?
17	What is SECTION in SONET?
18	List layer of SONET.
19	List advantage of SONET.
20	Give major difference between SONET and SDH.
UNIT-3	
21	What is DWDM?
22	Why we use DWDM?
23	How DWDM work?
24	List advantage of DWDM.
25	What is ATM?
26	What is ATM adaptation layer?
27	List ATM layers.
28	What is AAL type 0?

Atmiya University

29	List ATM advantage.
30	List ATM disadvantage.
UNIT-4	
31	What is B-ISDN?
32	List ISDN services.
33	List ISDN interfaces.
34	What is basic rate interface.
35	What is primary rate interface.
36	What are bearer services?
37	What are teleservices?
38	What are supplementary services?
39	List advantage of B-ISDN.
40	List disadvantage of B-ISDN.
UNIT-5	
41	What is packet switching?
42	What is virtual packet switching?
43	Why packet switching is used?
44	List types of packet switching network.
45	What is X.25 protocol?
46	What is connectivity in network?
47	What is availability in network?
48	What reliability in network?
49	What is maintainability in network?
50	What is unicast in network?

Modern Network
Question bank

UNIT-1		**Marks**
1	Explain optical communication in detail.	4
2	Explain different generation of optical communication.	4
3	Explain different types of communication system.	4
4	Explain SONET with diagram.	4
5	Explain SDH with diagram.	4
6	Give difference between SONET and SDH.	7

Atmiya University

7	Explain DWDM architecture with diagram.	7
8	List advantage and disadvantage of DWDM.	7
9	Explain ATM with diagram.	7
10	Explain ATM adaptation layer in detail.	7
UNIT-2		
11	Explain B-isdn in detail.	4
12	Explain different types of ISDN services.	4
13	Explain different types of ISDN interfaces.	4
14	Explain packet switching in detail.	4
15	Explain virtual packet in detail.	4
16	Explain different types of packet switching network.	7
17	Explain X.25 protocol in detail.	7
18	Explain SMDS in detail.	7
19	Explain advantage of SMDS in network.	7
20	Explain advantage of X.25 protocol.	7
UNIT-3		
21	Explain intra domain routing protocol.	4
22	Explain subnetting with example.	4
23	Explain IP multicasting in detail.	4
24	Explain routing information protocol in detail.	4
25	Explain IGRP in detail.	4
26	Explain SNMP in detail.	7
27	Explain advantage of SNMP.	7
28	Explain advantage of IGRP in detail.	7
29	Explain TCP/IP in detail.	7
30	Compare intra and inter domain networking	7
UNIT-4		
31	Explain path routing in detail.	4
32	Explain IP over ATM in detail.	4
33	Explain connective, availability, reliability and maintainability in network.	4
34	Explain spanning tree protocol in detail.	4
35	Explain Transmission of Multimedia over the Internet	4
36	Explain the Cisco Router User Interface.	7
37	Explain Command Line Interface (CLI).	7
38	Explain ATM Physical interface in detail.	7
39	Explain Intra-domain and inter-domain routings protocol.	7

Atmiya University

40	Explain Multiprotocol Label Switching in detail.	7
	UNIT-5	
41	Explain Traffic Sizing with suitable example.	4
42	Explain Traffic Characteristics and Protocols.	4
43	Explain Time and Delay Consideration in traffic engineering.	4
44	Explain Throughput Calculation with example.	4
45	Explain IP layer protocol in detail.	4
46	Explain IP.ARP and ICMP protocol in detail.	7
47	Explain traffic engineering in networking.	7
48	Explain limitation of traffic engineering in networking.	7
49	Explain unicast in detail.	7
50	Explain multicast in detail.	7

JAVA (23UGCE304) Question Bank

1	Why Java is platform independent?
2	What is JRE JDK and JVM
3	Demonstrate Method overloading with Example
4	Write a program that calculates percentage marks of the student if marks of 6 subjects are given.
5	Explain use of Interface with Example
6	Write a program to find length of string and print second half of the string.
7	Explain Different types of access specifier
8	What is requirement of throws keyword ,explain using example.
9	Differentiate Inputstream and outputstream
10	Explain Methodoverriding with example
11	What is Bytecode?
12	Demonstrate Constructor overloading with detail Example
13	Write a Java program to perform Sum and Multiplication of numbers within given Range
14	Explain Types of Inheritance in Java with appropriate Example
15	Demonstrate use of Super keyword
16	Explain Different types of access specifier
17	When finally, block is executed explain using example
18	Explain Different types of streams in Java
19	Describe the following methods related to String() replace()ii) compareTo()
20	What is wrapper class? What is the use of wrapper class in Java?

21	Explain memory management (garbage collection) in java.
22	What is purpose of static and this keyword with example.

23	Explain Thread lifecycle and describe creation of thread with suitable example
24	What is the effect of adding synchronized keyword to a method?
25	Write a program using BufferedInputStream,FileInputStream,BufferedOutputStream,FileOutputStream to copy Content of one file**Test1.txt** into another file**Test2.txt**.
26	Explain use of Linked List collection class with example.
27	Write a program to take three numbers as commandline argument. Display the maximum among them
28	Explain features of JAVA
29	WAP to find prime number from1to100
30	Demonstrate Dynamic Method Dispatch with example
31	Write a program to create two threads, one thread will print odd numbers and second thread will. Print even Numbers between 1 to20 numbers
32	Explain Exception propagation with example.
33	Explain Types of Inheritance in Java.
34	Write a program to differentiate between pass by value and pass by reference.
35	Program a box and also implement methods to print its area, volume and a method to double the size of the box. (pass object as an argument)
36	Write a program that illustrates interface inheritance. Interface P is extended by P1 and P2.Interface P12 inheritsfrom both P1and P2.Each interface declares one constant and one method. class Qimplements P12. Instantiate Q and invoke Each of its methods . Each method displays one of the constants
37	Runtime Polymorphism with example

38	Write an application that creates and starts three threads. Each thread is instantiated from the same class. It executes A loop with10 iterations. Each iteration displays string "HELLO",sleeps for 300 milliseconds.
39	Write a program to count the total no.ofchars, words, lines, alphabets, digits, whitespaces in a given file.
40	WAP to demonstrate Custom Exception in java.

41	ExplainTry,catch,throw,final,finallywithsuitableexample.
42	ExplainSocket&ServerSocketclasswithsuitableexample
43	WriteJavanetworkingProgramming serverclientchatapplicationwithusingTCP
44	WriteJavanetworkingProgrammingserverclientchatapplicationwithusingUDP

Faculty of Engineering and Technology
Department of Computer Engineering

Faculty of Engineering and Technology
Department of Computer Engineering

B.Tech.[CE/CSE] SEM.-V
Subject: Python for Data Science(21BTCECC503)
Question Bank

Unit: 1Overview of Python and Data Science

Sr. No.	Question	Mark
1	What is Python primarily used for in Data Science?	1
2	Which Python library is widely used for data manipulation and analysis?	1
3	What is the purpose of the import statement in Python?	1
4	In Python, what does the following code do? import numpy as np	1
5	Which Python library is commonly used for creating visualizations?	1
6	What is the main purpose of Data Science?	1

Sr. No.	Question	Mark
1	Write History of python and data science, Features of python	7
2	Write a python program to print Fibonacci series.	4
3	Explain Comments, Docstrings.	4
4	Explain different operators in python	4
5	What is Command line argument	7
6	Explain different Control Statements in python	7
7	Explain different data types String, Array, List, Tuple, Set, Dictionary	7
8	Difference between Local and Global variables	4

Faculty of Engineering and Technology
Department of Computer Engineering

Unit: 2Python Decision making and Loops, Functions and OOP Concepts

Faculty of Engineering and Technology
Department of Computer Engineering

Sr. No.	Question	Mark
1	What is inheritance in OOP?	1
2	Which of the following is the correct syntax for defining a method within a class in Python? A) def method self(): B) def method(): C) def method(self): D) define method(self):	1
3	Which of the following statements correctly creates an instance of a class named Car? A) my_car = Car() B) my_car = car() C) my_car = class(Car) D) my_car = new Car()	1
4	What does the return statement do in a function?	1
5	What keyword is used to define a class in Python?	1
6	What is the purpose of the break statement in loops?	1
7	Which loop is ideal for iterating over a known list of items in Python?	1
8	Which of the following is a valid function definition in Python? A) defmy_function[]: B) defmy_function: C) defmy_function(): D) defmy_function[]()	1

Atmiya University

Faculty of Engineering and Technology
Department of Computer Engineering

Sr. No.	Question	Mark
1	Explain Conditional Statement & loop with example	7
2	What is function? Explain with example	4
3	What is Recursion? Explain in Detail	4
4	Write short note on Module.	4
5	Write a program to check entered number is prime or not.	7
6	Print any pyramid using for loop	4
7	What is OOP?	4
8	Explain Constructor with example	4
9	Explain types of method in python	7
10	Explain Inheritance with its types	7
11	Explain following concept with example ● Polymorphism, ● Method overloading ● Method overriding	7

Atmiya University

Unit: 3: Getting Your Hands Dirty With Data

Sr. No.	Question	Mark
1	How do you install the Pandas library in Python?	1
2	Which plot is commonly used to show the distribution of numerical data?	1
3	Which Python library is used for handling multi-dimensional arrays?	1
4	Which function in Pandas returns the first few rows of a dataset?	1
5	Name one Python library used for data visualization.	1
6	What is the delimiter used in a CSV file by default?	1
7	Which function in Pandas is used to load a CSV file?	1
8	What does CSV stand for in the context of datasets?	1

Sr. No.	Question	Mark
1	Explain different types of file mode with example	4
2	Write a program to create a file of random numbers then separate even and odd numbers in separate file.	7
3	Write python program that copy content of one file to other and convert that content into uppercase.	4
4	Write short note on pandas?	4
5	Write a python program that create a data frame and save into csv file.	7
6	What is Directories? Explain with example and its application?	7

Unit: 4Working with Numpy Arrays, Exception Handling, Regular Expression

Sr. No.	Question	Mark
1	What does NumPy stand for?	1
2	Which keyword is used to handle exceptions in Python?	1
3	Which exception is raised when you divide by zero in Python?	1
4	Name one built-in Python exception.	1
5	What does `\d` match in a regular expression?	1
6	Which regular expression matches an email address?	1
7	Which function checks if a string matches a regular expression pattern?	1
8	What is the purpose of `re.compile()`?	1
9	What does the `re` module in Python stand for?	1
10	What does the metacharacter^ signify in a regular expression?	1

Faculty of Engineering and Technology
Department of Computer Engineering

Sr. No.	Question	Mark
1	Explain Module and Import	4
2	How to create 1D and2 D array using numpy?	4
3	Explain following concept with example ● Boolean indexing ● Fancy indexing ● Universal functions ● Data processing using arrays ● File input and output with arrays	4
4	Write Short Note on Exception Handlings	7
5	Define RE & and different methods of it with example	7
6	Write python program that extract email from given text?	7
7	Write python program that validate Mobile number our country?	7

Atmiya University

Unit: 5Data Visualization and Simple APIs

Sr. No.	Question	Mark
1	What is data visualization?	1
2	Name one type of plot used to show the relationship between two variables.	1
3	What function is used in Matplotlib to display a plot?	1
4	What does API stand for?	1
5	What does the HTTP method `GET` do?	1
6	Which function in Matplotlib is used to create a line plot?	1
7	Which Python function is used to send a GET request to an API?	1
8	How do you parse JSON data in Python?	1
9	What type of data is best visualized using a pie chart?	1
10	Which library in Python is commonly used for data visualization?	1

Faculty of Engineering and Technology
Department of Computer Engineering

Sr. No.	Question	Mark
1	Write short not on each with example ● Line Chart, ● Bar Chart, ● Pie Chart	4
2	Explain any 4 methods of turtle with example	4
3	Draw Graphics smiley using turtle.	7
4	What is Pylab?	4
5	Explain basic controls of tkinter with its properties.	7
6	Draw Login form using tkinter.	7
7	What is API? Write its advantages and disadvantages.	4
8	Write a python program that demonstrate the use of API	7
9	What is Web scraping?	4
10	Write a python program that scrap any website.	7

Semester – II		
Course Code	**Course Title**	**Credits**
21BAENCC204	**Core-8:** Metaphysical Poetry	4 Credits

Part A – Answer in one word/line.

Unit 1

1. What is Metaphysical Poetry?
2. Who coined the term "Metaphysical Poetry"?
3. When did the Metaphysical Poetry movement emerge?
4. What distinguishes Metaphysical Poetry from other poetic movements?
5. Who are some prominent Metaphysical Poets?
6. What is the central theme of Metaphysical Poetry?
7. What role does wit play in Metaphysical Poetry?
8. How does Metaphysical Poetry use elaborate conceits?
9. What is the relationship between spirituality and Metaphysical Poetry?
10. What impact did Metaphysical Poetry have on later generations of poets?

Unit 2

1. Who are some major Metaphysical Poets?
2. Name one of John Donne's famous poems.
3. Which Metaphysical Poet is known for his religious and devotional works?
4. Who wrote "To His Coy Mistress," a well-known Metaphysical poem?
5. What is George Herbert's most celebrated work?
6. Who is often regarded as the leader of the Minor Metaphysical Poets?
7. Which Metaphysical Poet wrote "The Definition of Love"?
8. Who is known for his humorous and satirical Metaphysical poetry?
9. What is the distinctive style of Henry Vaughan, a Minor Metaphysical Poet?
10. Name one Minor Metaphysical Poet who was a contemporary of John Donne.

Unit 3

1. What is alliteration in poetry?
2. How does a simile differ from a metaphor?

Atmiya University

3. What is personification, and how is it used in literature?
4. Explain the concept of a paradox in literary terms.
5. What is a conceit in poetry?
6. Define apostrophe as a figure of speech.
7. How does synecdoche work in language and literature?
8. What is hyperbole, and how does it enhance literary expression?
9. What is a pun, and how does it create wordplay in writing?
10. Describe metonymy as a figure of speech and provide an example.

Unit 4

1. Who is the author of the poems in this unit?
2. Which poem by John Donne is featured?
3. What is the title of the first Holy Sonnet by John Donne?
4. Which religious theme is often explored in John Donne's poetry?
5. What type of poem is "A Hymn to God, the Father"?
6. Which literary movement is John Donne associated with?
7. Can you name another famous poem by John Donne?
8. What is a common feature of John Donne's metaphysical poetry?
9. What is the central emotion conveyed in Donne's "Song"?
10. How does Donne's poetry often blend the physical and spiritual realms?

Unit 5

1. What is the title of a poem by George Herbert in this unit?
2. Which George Herbert poem is known for its exploration of virtue?
3. Which literary movement are George Herbert and Andrew Marvell associated with?
4. What is a common theme found in George Herbert's poetry?
5. How is "The Pulley" by George Herbert characterized?
6. Which poem by Andrew Marvell is celebrated for its description of a garden?
7. How does Andrew Marvell's poetry often differ from that of George Herbert?
8. Can you name another famous work by Andrew Marvell?

Part B – Write answers in brief.

Unit 1

Atmiya University

1. Who coined the term "Metaphysical Poetry"? Write the history.
2. What distinguishes Metaphysical Poetry from other poetic movements?
3. Who are some prominent Metaphysical Poets?
4. What is the central theme of Metaphysical Poetry?
5. How does Metaphysical Poetry use elaborate conceits?
6. What is the relationship between spirituality and Metaphysical Poetry?
7. How does Metaphysical Poetry employ paradox?
8. What role does wit play in Metaphysical Poetry?
9. What is the significance of the metaphysical conceit?
10. How does Metaphysical Poetry challenge conventional ideas of love?
11. What is the connection between religion and Metaphysical Poetry?
12. How did the historical context of the 17th century influence Metaphysical Poetry?
13. How does Metaphysical Poetry use vivid and concrete imagery?
14. What is the impact of Metaphysical Poetry on later generations of poets?
15. How does the use of the dramatic monologue appear in Metaphysical Poetry

Unit 2

1. Who are considered major Metaphysical Poets, and why are they categorized as such?
2. Can you name a famous poem written by George Herbert?
3. Which Metaphysical Poet is known for his wit and intellectual depth?
4. What is the central theme of Andrew Marvell's "To His Coy Mistress"?
5. How does John Donne's poetry often blend the physical and the spiritual?
6. Who is recognized for his religious and devotional Metaphysical poetry?
7. What is unique about the poetic style of Richard Crashaw?
8. Who is the leader among the Minor Metaphysical Poets, and what characterizes their works?
9. Which Metaphysical Poet is known for his satirical and humorous poetry?
10. Can you name a famous work by Henry Vaughan, a Minor Metaphysical Poet?
11. Who is the contemporary of John Donne among the Minor Metaphysical Poets?
12. What distinguishes the Minor Metaphysical Poets from their major counterparts?
13. Which Metaphysical Poet is associated with the poem "The Definition of Love"?
14. How does the poetry of Anne Bradstreet reflect Metaphysical elements?

Atmiya University

15. What role did the Minor Metaphysical Poets play in the broader literary landscape of their time?

Unit 3

1. How does alliteration contribute to the musicality of poetry?
2. What is the primary difference between a simile and a metaphor?
3. How does personification breathe life into non-human entities in literature?
4. What role does paradox play in adding depth to literary works?
5. How does a conceit differ from a conventional metaphor or simile?
6. What is the purpose of using apostrophe in literary works?
7. Can you explain the concept of synecdoche and provide an example?
8. How does hyperbole intensify the impact of language in literature?

Unit 4

1. Which poem contains the first Holy Sonnet by John Donne?
2. What is the predominant theme of John Donne's poetry?
3. Can you identify the genre of "A Hymn to God, the Father"?
4. How would you describe John Donne's association with the Metaphysical Poetry movement?
5. Can you name another well-known work by John Donne?
6. What is a characteristic feature of John Donne's metaphysical poetry?
7. What is the primary emotion expressed in Donne's "Song"?

Unit 5

1. Which George Herbert poem explores the concept of virtue?
2. Can you identify the poem by Andrew Marvell featured in this unit?
3. What literary movement are George Herbert and Andrew Marvell associated with?
4. What is a recurring theme in George Herbert's poetry?
5. How would you describe the style and content of "The Pulley" by George Herbert?
6. What is the main focus of Andrew Marvell's poem "The Garden"?
7. How do the poetic styles of George Herbert and Andrew Marvell differ?

Part C – Write answers in descriptive.

Atmiya University

Unit 1

1. How did the term "Metaphysical Poetry" originate, and what does it signify?
2. Can you explain the key features that distinguish Metaphysical Poetry from other poetic movements?
3. Who were some of the prominent Metaphysical Poets, and what are their notable works?
4. What is the central thematic focus of Metaphysical Poetry?
5. How do Metaphysical Poets employ elaborate conceits in their works, and can you provide examples?
6. How does Metaphysical Poetry explore the relationship between spirituality and human experience?
7. What role does paradox play in Metaphysical Poetry, and how does it contribute to the poetic style?
8. In what ways does wit and intellectual wordplay characterize Metaphysical Poetry?
9. What is the significance of metaphysical conceits, and how do they enhance the poems?
10. How does Metaphysical Poetry challenge conventional notions of love and beauty?
11. Can you elaborate on the religious themes often present in Metaphysical Poetry?
12. How did the historical and cultural context of the 17th century influence the themes and concerns of Metaphysical Poets?
13. How do Metaphysical Poets employ vivid and concrete imagery in their works?
14. What distinguishes Metaphysical Poetry from the Romantic poetry that emerged later in literary history?
15. What enduring impact did the Metaphysical Poets have on subsequent generations of writers and poets?

Unit 2

1. What are the defining characteristics that distinguish major Metaphysical Poets from minor ones?
2. Can you delve into John Donne's unique contributions to the Metaphysical Poetry movement?
3. How does George Herbert's religious and devotional poetry align with the Metaphysical tradition?

Atmiya University

4. Could you analyze the central themes and stylistic elements of Andrew Marvell's "To His Coy Mistress" as a Metaphysical poem?
5. In what ways does John Donne's poetry exemplify the fusion of physical and spiritual themes?
6. What are the key religious and spiritual themes explored in the works of George Herbert?
7. How did the Minor Metaphysical Poets contribute to the overall diversity and development of the Metaphysical Poetry movement?

Unit 3

1. How does alliteration enhance the overall impact of a poem, and can you provide examples of its use?
2. In what ways do similes and metaphors contribute to the vividness of descriptions in literature?
3. How does personification breathe life into inanimate objects or abstract concepts, and why is it effective?
4. Can you elaborate on the role of paradox in creating thought-provoking and contradictory statements in literary works?
5. What distinguishes a conceit from a conventional metaphor or simile, and can you provide examples of conceits in literature?
6. How does the use of apostrophe in literature allow for direct address to absent or non-human entities, and what emotional depth does it add to the text?
7. Could you explain the concept of synecdoche in detail and provide examples of its various forms in literary works?

Unit 4

1. How does John Donne's poetry reflect the characteristics of Metaphysical Poetry?
2. Can you provide an analysis of the themes explored in John Donne's "Song"?
3. What is the significance of religious themes in Donne's "From Holy Sonnets-I"?
4. How does John Donne employ intricate conceits in his metaphysical poetry?
5. What is the structure and style of "A Hymn to God, the Father," and how does it contribute to its meaning?

Atmiya University

6. How did John Donne's personal experiences and religious beliefs influence his poetry?
7. Can you explain the impact of John Donne's poetry on the broader literary landscape of his time?

Unit 5

1. How does George Herbert's poem "Virtue" embody the themes of Metaphysical Poetry?
2. Can you analyze the central ideas and themes explored in "The Pulley" by George Herbert?
3. What is the significance of religious and spiritual themes in the poetry of George Herbert?
4. How does Andrew Marvell's "The Garden" exemplify the characteristics of Metaphysical Poetry?
5. What are the key elements that define the garden in Marvell's poem?
6. How does Andrew Marvell's style and approach to poetry differ from that of George Herbert?
7. Can you provide insights into the lasting impact of George Herbert and Andrew Marvell on the world of poetry?

Atmiya University

Faculty of Engineering and Technology
Department of Computer Engineering

B.Tech. SEM.-VII
Subject: Research Methodology
(21BTCECL706)
Question Bank

Unit:1

Sr. No.	Question	Mark
1	Define and explain the term "Research". Explain its importance and objectives.	4
2	Define the main issues which should receive the attention of the researcher in formulating the research problem. Give suitable examples.	4
3	What are the categories of Research?	7
4	What is Difference between Quantitative Research and Qualitative Research?	4
5	What is Difference between Basic Research and Applied Research?	7
6	Describe basic steps of research.	7
7	What are the criteria of good research?	7
8	What are Types of research?	7
9	What is actual Meaning of research problem and how it helps in selection of research problem?	7

Atmiya University

Unit:2

Sr. No.	Question	Mark
1	What is Importance of Literature Review?	4
2	What are the Sources of Literature and how to decide which sources you will need.	4
3	Differentiate between journals, conferences, books, magazines and their quality.	4
4	Finding Information about How to conduct effective searches?	7
5	How to find relevant papers related to your area of research and how to capture critical information?	7
6	Write notes to organize your ideas - Compare ideas and concepts from different papers (Related to your topic)	4
7	Review of related literature- Meaning, necessity and sources.	4
8	Discuss the various methods of research? Explain the various factors to be considered in making the decision of sampling method.	7
9	What is necessity of literature?	4
10	What are the sources of to collect literature to write research paper?	7

Atmiya University

Unit:3

Sr. No.	Question	Mark
1	How do you carry Literature Review? What are the advantage of same?	4
2	Explain the significance of primary data. What are the limitations of primary data? Explain in brief the stages in data processing.	4
3	What are the Types of research design- exploratory, descriptive, Casual?	4
4	Definition and Purpose of research design.	4
5	Describe the Tools and techniques use for data collection which include questionnaire, schedule, interview, observation, case study, survey etc.	7
6	Differentiate Primary vs. Secondary Data.	7
7	Types of random sampling and non-random sampling.	7
8	All difference in material is important.	7
9	Describe the Sampling design Tools for data collection.	7

Unit:4

Sr. No.	Question	Mark
1	How to write Research Proposal	4
2	Write down the format of Report Writing.	4
3	What is Effective technical writing? How to write Format of research proposal.	4

Atmiya University

4	What is report? Explain types of Report.	**7**
5	Write down the Process of reviewing and proofreading your work.	**7**
6	What type of feedback is generally use to improve your work	**7**
7	Define research report and explain structure of research report.	**7**
8	What is Meaning and importance of workshop, seminar, conference, symposium etc. in research.	**7**

Unit:5

Sr. No.	Question	Mark
1	What is plagiarism? Explain types of plagiarism.	4
2	How to Avoid Plagiarism?	4
3	Why is plagiarism unethical?	7

Atmiya University

Faculty of Engineering and Technology
Department of Computer Engineering

B.Tech. SEM.-V
Subject: Software Engineering(21BTCECC502)
Question Bank for 1 Mark

Unit:1

1. Define software.
2. Name any two characteristics of software.
3. What does software quality mean?
4. Give an example of an application software.
5. What is meant by software engineering?
6. Which model uses iterations to refine the system?
7. Name one risk-driven software life cycle model.
8. What is the spiral model used for?
9. Define prototyping in software development.
10. In which life cycle model is customer feedback used most frequently?
11. What is a software life cycle?
12. Name any one software life cycle model.
13. What is the full form of SDLC?
14. Which model is also called the "linear sequential model"?
15. What is the main drawback of the waterfall model?

Unit:2

1. What is software project estimation?
2. Name one estimation technique used in software engineering.
3. What is the purpose of a cost estimation model?
4. Define "effort estimation" in project management.
5. What is the full form of COCOMO?

Atmiya University

6. What is the goal of project planning in software engineering?
7. Name any one element of a software project plan.
8. What is meant by scope in project planning?
9. Why is a Work Breakdown Structure (WBS) used in planning?
10. What is the importance of resource allocation in project planning?
11. What is project scheduling?
12. Name one technique used for project scheduling.
13. What does Gantt chart represent?
14. Define critical path in project scheduling.
15. What is the purpose of tracking a project?

Unit:3

1. What is requirement engineering?
2. Name the phases of requirement engineering.
3. Define requirement validation.
4. What is requirement traceability?
5. Name one challenge in requirement engineering.
6. What is the full form of SRS?
7. What is the main purpose of an SRS document?
8. Name one key characteristic of a good SRS.
9. What is meant by "verifiable" in SRS?
10. Define the term "modifiable" in the context of SRS.
11. What is requirement modeling?
12. Name one technique used in requirement modeling.
13. What does a use case diagram represent?
14. Define data flow diagram (DFD).
15. What is the role of an entity-relationship diagram (ERD) in requirement modeling?

Unit:4

1. What is conceptual design in software development?
2. Define technical design.
3. What is meant by "function access" in programming?
4. Name the two types of design paradigms in software engineering.

5. What is the difference between a public and private function in object-oriented programming?
6. What is a test case?
7. Name one key component of a test case.
8. What is a positive test case?
9. Define a negative test case.
10. Why is test case documentation important?
11. What is the purpose of user interface (UI) design?
12. Name one principle of effective UI design.
13. What is meant by "responsive web design"?
14. Define a web application.
15. What is the difference between a static and a dynamic web page?

Unit:5

1. What is software quality?
2. Define Software Quality Assurance (SQA).
3. Name one activity performed in SQA.
4. What is the purpose of a quality audit?
5. Name one key characteristic of high-quality software.
6. What is the ISO in ISO 9000?
7. Define ISO 9000 standards.
8. What is the main focus of ISO 9001?
9. Name one benefit of implementing ISO 9000 standards.
10. What is the purpose of quality management systems (QMS)?
11. Define software reliability.
12. What is MTBF in reliability analysis?
13. Name one factor affecting software reliability.
14. What is fault tolerance in software?
15. Why is reliability important for critical systems?

Faculty of Engineering and Technology
Department of Computer Engineering

B.Tech. SEM.-V
Subject: Software Engineering(21BTCECC502)
Question Bank

Unit:1

Sr. No.	Question	Mark
1	What is software Engineering?	4
2	What are the Software Characteristics?	4
3	What are Myths in Software Engineering?	4
4	Explain Layered Approach in Software Engineering.	4
5	What is Software Process? Justify the purpose of software Engineering.	7
6	Explain Umbrella Activities in detail.	4
7	Explain Software Development Life Cycle in detail.	7
8	Explain Software Process Model (ALL).	7
9	List out the Agile Development Tools.	4

Unit:2

Atmiya University

Sr. No.	Question	Mark
1	Explain Risk Analysis & Management in detail.	4
2	Explain Types of Software Maintenance.	4
3	What is Software Metrics? Explain in detail.	4
4	Explain Software Project Estimation Technique in detail.	7
5	Explain Function Point Analysis in detail.	7
6	Explain COCOMO Model.	4
7	Explain Scheduling Principles in detail.	4
8	Explain Project Tracking with example.	4
9	What risk identification.	4
10	What is RMMM.	4
11	Study of requirement specification for a project has produced following results: Need for 7 inputs, 10 outputs, 6 inquiries, 17 files and 4 external interfaces Input and external interface function point attributes are of average complexity and all other function points attributes are of low complexity Determine adjusted function points assuming complexity adjustment value is 32.	7
12	Assume that the size of an organic type software product has been estimated to be 32,000 lines of source code. Assume that the average salary of software engineers is Rs. 15,000/- per month. Determine the effort, nominal development time and cost required to develop the software product.	7
13	Explain W5HH Principle in detail.	7

Unit:3

Sr. No.	Question	Mark
1	What is SRS? Discuss Functional Requirements and Non-functional Requirements with example.	7
2	What is Requirement Engineering? Explain different tasks of Requirement Engineering.	4
3	Explain Requirement Elicitation Process.	4
4	What is DFD? Explain level in DFD.	4
5	What is Structure Design? Explain Structure Chart in detail.	7
6	UML Diagrams (ALL).	7

Unit:4

Sr. No.	Question	Mark
1	Explain the difference between Cohesion and Coupling.	4
2	Explain Function Oriented Design and Object Oriented Design	4
3	Explain Conceptual and technical design.	4
4	What is User interface design	4
5	Discuss Code Review Techniques.	7
6	What is Testing? Discuss Types of Testing.	7
7	Discuss Black-Box testing technique with its method.	7
8	Discuss White-Box testing technique with its method.	7
9	Explain the pyramid of web application design in detail.	4
10	Explain Coding Standard.	4

Unit:5

Faculty of Engineering and Technology
Department of Computer Engineering

Sr. No.	Question	Mark
1	What is Software Maintenance? Explain types of Software Maintenance.	4
2	What is Quality? Explain ISO 9000.	4
3	Explain SCM Process in detail.	7
4	What is Re-Engineering? Explain Reverse Engineering and Forward Engineering.	7
5	What is Measurement of Software Reliability?	4
6	Give methodology of Six Sigma.	7
7	Explain CMM.	7

Subject: Pavement Analysis and Design

Subject Code – 21MCITCC202

Question Bank

Chapter: 1

1. Describe difference between flexible and rigid pavement.
2. Type of Pavement Structure.
3. Objects and requirement of Pavement.
4. Functions of Pavement Components.
5. Factors to be considered in Design of Pavement.
6. Max Wheel Load, Contact Pressure, Tyre Pressure.
7. Equivalent Axles Load.

Chapter: 2

1. Design Procures Of Flexible Pavement as per IRC 37-2018.
2. Group Index Method.
3. Burmister‘ s(Layered System) Method.
4. Explain ESWL Theory.
5. Find ESWL at depths of 5cm, 20cm and 40cm for a dual wheel carrying 2044 kg each. The center to center tyre spacing is 20cm and distance between the walls of the two tyres is 10cm.
6. Let number of load repetition expected by 60kN standard axle is 1000, 120kN is 200 and 40 kN is 10000.Find the equivalent axle load using fatigue cracking as failure criteria according to IRC. Hint:Nf = 2.21 ×10^ −4(Et)^ −3.89(E)^ 0.854 (ESL Example)
7. Design of Bituminous Pavement with Granular Base and Sub-base

   Problem: Design a bituminous pavement with granular base and sub-base layers using the following input data.

   Four lane divided carriageway

   Initial traffic in the year of completion of construction = 5000 cvpd (two-way)

   Traffic growth rate per annum = 6.0 per cent

   Design life period = 20 years

Atmiya University Rajkot

Vehicle damage factor 5.2 (taken to be the same for both directions)

Effective CBR of subgrade estimated as per the procedure given in example II. 1 =7%

Marshall mix design carried out on the bituminous mix to be used in the bottom bituminous layer (DBM) for an air void content of 3% resulted in an effective bitumen content (by volume) of 11.5% (IRC 37-2018).

8. Design size and spacing of dowel bars at an expansion joint of concrete pavement of thickness 25 cm. Given the radius of relative stiffness of 80 cm. design wheel load 5000 kg. Load capacity of the dowel system is 40 percept of design wheel load. Joint width is 2.0 cm and the permissible stress in shear, bending and bearing stress in dowel bars are 1000,1400 and 100 kg/cm² respectively.(IRC 37-2012)

Chapter: 3

1. General Design Consideration of Rigid Pavement.
2. Compute the radius of relative stiffness of 15 cm thick cement concrete slab from the following data:
   Modulus of elasticity of cement concrete = 2,10,000 kg/cm²
   Poisson's ratio for concrete = 0.13
   Modulus of subgrade reaction, K=(i) 3.0 kg/cm³ (ii) 7.5 kg/cm³
3. Explain Critical Load Position.
4. Compute the equivalent radius of resisting section of 20 cm slab, given that the radius of contact area wheel load is 15 cm.
5. Explain Westegaard's Stress Analysis.
6. Calculate the stresses at interior, edge and corner regions of a cement concrete pavement using Westergaard's stress equations. Use the following data:
   Wheel load, P 5100 kg
   Modulus of elasticity of cement concrete, E=3.0\times10^{5}kg/cm^{2}
   Pavement thickness, h=18~c
   Poisson's ratio of concrete, \mu=0.15
   Modulus of subgrade reaction, K=6.0~kg/cm
   Radius of contact area, a=15~cm
7. Explain Detailed Temperature Stresses & Types.

Atmiya University Rajkot

8. Determine the warping stresses at interior, edge and corner regions in a 25 cm thick concrete pavement with transverse joints at 11 n interval and longitudinal joints at 3.6 m intervals. The modulus of subgrade reaction (K) is 6.9 kg/cm³. Assume temperature differential for day conditions to be 0.6°C per cm slab thickness. Assume radius of loaded area as 15 cm for computing warping stress at the corner. Additional data are given below : e=10*10^-6 per°C , E= 3* 10^5 kg/cm^2, μ=0.15
9. Explain Combination of Stresses.
10. A CC pavement slab of thickness 20 cm is constructed over a granular sub-base having modulus of reaction 15 kg/cm². The maximum temperature difference between the top and bottom of the slab during summer day and night is found to be 18°C. The spacing between the transverse contractions joint is 4.5 m and that between longitudinal joints is 3.5 m. The design wheel load is 5100 kg, radius of contact area is 15 cm, E value of CC is 3 x 10 kg/cm², Poisson's ratio 5 CC is 10 x 106 is 0.15, and coefficient of thermal expansion of per °C and friction coefficient is 1.5. Using the edge and corner load stress charts given by the IRC and the chart for the warping stress coefficient, find the worst combination of stresses at the edge.
11. Explain Various Joint Use in Rigid Pavement .
12. Explain Design Procedure Dowel Bar.
13. Explain Design Procedure Tie Bar.
14. Design size and spacing of dowel bars at an expansion joint of concrete pavement of thickness 25 cm. Given theradius of relative stiffness of 80 cm. design wheel load 5000 kg. Load capacity of the dowel system is 40 percentof design wheel load. Joint width is 2.0 cm and the permissible stress in shear, bending and bearing stress indowel bars are 1000,1400 and 100 kg/cm2respectively.
15. A cement concrete pavement of thickness 18 cm, has two lanes of 7.2 m with a joint. Design the tie bars.

Chapter: 4

1. Explain Pavement Distress.
2. Flexible Pavement Distress.
3. Rigid Pavement Distress.
4. Enlist Method Of Functional evaluation of pavement discuss the functions Parameters.
5. Enlist Method Of Structural evaluation of pavement discuss the Structural Parameter.

Atmiya University Rajkot

6. Explain Bump Integrator Method For Functional Evaluation Of Pavement.
7. Explain BBD Method For Structural evaluation Of Flexible Pavement.
8. Difference Between Structural evaluation& Functional evaluation.
9. Difference between BBD & FWD of Pavement Evaluation.

Chapter: 5

1. Design Procedure of flexible overlay Flexible Pavement by BBD method.
2. Design Procedure of Rigid overlay Rigid Pavement.
3. Explain Concept of White topping pavement.
4. Explain of BBD Overlay.
5. ❖ **Example : (June 2014)**

Benkelman Beam deflection studies were carried out on various points of flexible pavement during summer season with a test vehicle of 8170 kg rear axle load. Observations recorded at a pavement temperature of 42 C. Length of the stretch is 400 m.

Serial Number of sub section	Rebound Deflection in mm	Serial Number of sub section	Rebound Deflection in mm
1	1.45	7	1.65
2	1.65	8	1.71
3	1.68	9	1.87
4	1.64	10	1.93
5	1.60	11	1.58
6	1.48	12	1.63

Compute the thickness of overlay of bituminous concrete, taking allowable deflection as 1.30 mm, if the factor for subgrade moisture correction is 2.0

Atmiya University Rajkot

ATMIYA UNIVERSITY, RAJKOT

Information Technology

B.Tech. SEM.-II

Subject: Problem Solving techniques using C(21BTITCC201)

Questions Bank

	UNIT-1	Marks
1	Explain Number System With example.	4
2	What is Algorithm? Write with Example.	4
3	Explain Top down Approach with Example.	4
4	Explain Bottom Up Approach with Example.	4
5	Explain Block Diagram of Computer.	7
6	Explain Type of Programming Language.	7
7	What is Flowchart? Explain It's Shape and Example.	7
8	Explain Binary to Octal and Octal to Binary System With Example.	7
9	Explain Binary to Hexadecimal and Hexadecimal to Binary with example.	7
10	Explain Binary to Decimal and Decimal to Binary with example.	7
	UNIT-2	
1	Explain Keyword.	4
2	What is Variable? Explain it's Declaration with Example	4
3	What is Identifiers? Write it's Example.	4
4	Write Data Input Out Function.	4
5	What is Type Conversion ? Write with Example.	4
6	Explain Data Types.	7
7	What is Operator ? Explain It's type with Example.	7
8	Explain C Character Set.	7
9	Explain Looping: while, do-while, for loop, Nested with Example.	7
10	Explain Branching:if,if-else,ladder if-else, Nested if-else with Example.	7
11	Explain Switch and goto Statement with Example.	7

Atmiya University

		7
UNIT-3		
1	What is Array ? Explain Processing an array with example.	4
2	Explain Strings: Declaration and Initialization With example.	4
3	Explain String Function With its Type.	7
4	What is Array ? Explain It's Type with example	7
UNIT-4		
1	Defining a Function and Accessing a Function.	4
2	What is Function? How to Initialization function?	4
3	What is pointer? Explain With Example.	4
4	What is Function? Explain it's type with Example.	7
5	What is Recursion? explain with Example.	7
UNIT-5		
1	What is Structure? How to define Structure ?	4
2	Declaration of Structure with Example.	4
3	What is Union Write with Example.	4

Atmiya University

ATMIYA UNIVERSITY, RAJKOT

Information Technology

B.Tech. SEM.-II

Subject: Problem Solving techniques using C(21BTITCC201)

Questions Bank

	UNIT-1	Marks
1	Explain Number System With example.	4
2	What is Algorithm? Write with Example.	4
3	Explain Top down Approach with Example.	4
4	Explain Bottom Up Approach with Example.	4
5	Explain Block Diagram of Computer.	7
6	Explain Type of Programming Language.	7
7	What is Flowchart? Explain It's Shape and Example.	7
8	Explain Binary to Octal and Octal to Binary System With Example.	7
9	Explain Binary to Hexadecimal and Hexadecimal to Binary with example.	7
10	Explain Binary to Decimal and Decimal to Binary with example.	7
	UNIT-2	
1	Explain Keyword.	4
2	What is Variable? Explain it's Declaration with Example	4
3	What is Identifiers? Write it's Example.	4
4	Write Data Input Out Function.	4
5	What is Type Conversion ? Write with Example.	4
6	Explain Data Types.	7
7	What is Operator ? Explain It's type with Example.	7
8	Explain C Character Set.	7
9	Explain Looping: while, do-while, for loop, Nested with Example.	7
10	Explain Branching:if,if-else,ladder if-else, Nested if-else with Example.	7
11	Explain Switch and goto Statement with Example.	7

Atmiya University

		7
UNIT-3		
1	What is Array ? Explain Processing an array with example.	4
2	Explain Strings: Declaration and Initialization With example.	4
3	Explain String Function With its Type.	7
4	What is Array ? Explain It's Type with example	7
UNIT-4		
1	Defining a Function and Accessing a Function.	4
2	What is Function? How to Initialization function?	4
3	What is pointer? Explain With Example.	4
4	What is Function? Explain it's type with Example.	7
5	What is Recursion? explain with Example.	7
UNIT-5		
1	What is Structure? How to define Structure ?	4
2	Declaration of Structure with Example.	4
3	What is Union Write with Example.	4

Atmiya University

Information Technology Department
B.Tech. SEM.-II

Subject: 1: Problem Solving techniques using C (21BTITCC201)
Question Bank

Unit 1

1. What is C programming, and why is it widely used?
2. Who developed C, and what are its key features?
3. What is the structure of a basic C program?
4. What are the rules for naming identifiers in C?
5. How is `#include` used in C programming?
6. What is the purpose of the `main()` function in C?
7. Explain the different data types available in C.
8. What are constants and variables? How are they declared in C?
9. What is the difference between `printf()` and `scanf()` functions?
10. What are keywords in C? Provide examples.
11. How do you perform type casting in C?
12. What are the steps involved in the compilation and execution of a C program?

Unit 2

1. What are decision-making statements in C? Explain with examples.
2. How does the `if-else` statement work in C?
3. Explain the use of nested `if-else` statements.
4. What is a `switch` statement, and how is it different from `if-else`?
5. What are loops in C? Explain the types of loops.
6. How does a `for` loop differ from a `while` loop in C?
7. What is a `do-while` loop? How does it differ from `while`?

8. What is the purpose of the `break` and `continue` statements?
9. What is a function in C? How do you define and call one?
10. What are the advantages of using functions in C programming?
11. What is the difference between `call by value` and `call by reference`?
12. What is recursion? Provide an example of a recursive function.

Unit 3

1. What is an array in C, and how is it declared?
2. Explain the difference between one-dimensional and multi-dimensional arrays.
3. How can you initialize an array in C?
4. What are the advantages and limitations of arrays in C?
5. How do you pass an array to a function in C?
6. What is a string in C, and how is it different from a character array?
7. What are the common string handling functions in C (e.g., `strlen`, `strcpy`, `strcmp`)?
8. How do you concatenate two strings in C?
9. Write a program to reverse a string in C.
10. Explain how to find the length of a string without using built-in functions.
11. What is the difference between `gets()` and `scanf()` for strings?
12. How do you sort an array of strings in C?

Unit 4

1. What is a pointer in C? How is it declared and initialized?
2. Explain the relationship between pointers and arrays in C.
3. What is the purpose of the `&` and `*` operators in C?
4. How do you pass pointers to a function in C?
5. What is pointer arithmetic? Provide examples.
6. Explain the concept of null pointers in C.
7. How are pointers used in dynamic memory allocation?
8. What are the functions used for dynamic memory allocation in C (`malloc`, `calloc`, `realloc`, `free`)?
9. What is a dangling pointer? How can it be avoided?
10. How do you create a pointer to a function in C?
11. What is the difference between `const int *ptr`, `int *const ptr`, and `const int *const ptr`?
12. Explain the use of `void` pointers in C.

Unit 5

1. What is a structure in C? How is it different from an array?
2. How do you declare and access members of a structure in C?
3. What is the purpose of the `typedef` keyword in C?
4. How do you create an array of structures?
5. What are unions in C, and how are they different from structures?
6. What is the purpose of file handling in C?
7. What are the file modes in C (e.g., `r`, `w`, `a`)?
8. How do you open, read, write, and close a file in C?
9. Explain the difference between `fopen()` and `freopen()` in file handling.
10. What are `fgetc()`, `fputc()`, `fgets()`, and `fputs()` used for in file operations?
11. How do you use `fprintf()` and `fscanf()` for formatted file input/output?
12. What are bitwise operators in C? Provide examples of their use.
13. What is a preprocessor directive in C? Explain `#define` and `#include`.
14. What is the difference between macros and inline functions?
15. What is the role of command-line arguments in C programming?

Information Technology Department
B.Tech. SEM.-II

Subject: 1: Problem Solving techniques using C (21BTITCC201)
Question Bank

Unit 1

1. What is C programming, and why is it widely used?
2. Who developed C, and what are its key features?
3. What is the structure of a basic C program?
4. What are the rules for naming identifiers in C?
5. How is `#include` used in C programming?
6. What is the purpose of the `main()` function in C?
7. Explain the different data types available in C.
8. What are constants and variables? How are they declared in C?
9. What is the difference between `printf()` and `scanf()` functions?
10. What are keywords in C? Provide examples.
11. How do you perform type casting in C?
12. What are the steps involved in the compilation and execution of a C program?

Unit 2

1. What are decision-making statements in C? Explain with examples.
2. How does the `if-else` statement work in C?
3. Explain the use of nested `if-else` statements.
4. What is a `switch` statement, and how is it different from `if-else`?
5. What are loops in C? Explain the types of loops.
6. How does a `for` loop differ from a `while` loop in C?
7. What is a `do-while` loop? How does it differ from `while`?

8. What is the purpose of the `break` and `continue` statements?
9. What is a function in C? How do you define and call one?
10. What are the advantages of using functions in C programming?
11. What is the difference between `call by value` and `call by reference`?
12. What is recursion? Provide an example of a recursive function.

Unit 3

1. What is an array in C, and how is it declared?
2. Explain the difference between one-dimensional and multi-dimensional arrays.
3. How can you initialize an array in C?
4. What are the advantages and limitations of arrays in C?
5. How do you pass an array to a function in C?
6. What is a string in C, and how is it different from a character array?
7. What are the common string handling functions in C (e.g., `strlen`, `strcpy`, `strcmp`)?
8. How do you concatenate two strings in C?
9. Write a program to reverse a string in C.
10. Explain how to find the length of a string without using built-in functions.
11. What is the difference between `gets()` and `scanf()` for strings?
12. How do you sort an array of strings in C?

Unit 4

1. What is a pointer in C? How is it declared and initialized?
2. Explain the relationship between pointers and arrays in C.
3. What is the purpose of the `&` and `*` operators in C?
4. How do you pass pointers to a function in C?
5. What is pointer arithmetic? Provide examples.
6. Explain the concept of null pointers in C.
7. How are pointers used in dynamic memory allocation?
8. What are the functions used for dynamic memory allocation in C (`malloc`, `calloc`, `realloc`, `free`)?
9. What is a dangling pointer? How can it be avoided?
10. How do you create a pointer to a function in C?
11. What is the difference between `const int *ptr`, `int *const ptr`, and `const int *const ptr`?
12. Explain the use of `void` pointers in C.

Unit 5

1. What is a structure in C? How is it different from an array?
2. How do you declare and access members of a structure in C?
3. What is the purpose of the `typedef` keyword in C?
4. How do you create an array of structures?
5. What are unions in C, and how are they different from structures?
6. What is the purpose of file handling in C?
7. What are the file modes in C (e.g., `r`, `w`, `a`)?
8. How do you open, read, write, and close a file in C?
9. Explain the difference between `fopen()` and `freopen()` in file handling.
10. What are `fgetc()`, `fputc()`, `fgets()`, and `fputs()` used for in file operations?
11. How do you use `fprintf()` and `fscanf()` for formatted file input/output?
12. What are bitwise operators in C? Provide examples of their use.
13. What is a preprocessor directive in C? Explain `#define` and `#include`.
14. What is the difference between macros and inline functions?
15. What is the role of command-line arguments in C programming?

ATMIYA UNIVERSITY, RAJKOT
Information Technology

B.Tech. SEM.-IV

Subject: Core 8:
Object Oriented Programming using JAVA (F) 21BTITCC403

Question Bank

	Unit-1 Evolution and fundamentals of Java.(Refer PPT-chapter-1)	
1	What is JVM Explain it in detail.	5/7
2	What is JVM Explain it in detail.	5/7
3	What is Byte code?	1
4	Explain Data type in detail.	7
5	Explain All operators in detail.	7
6	Explain all control statements in detail.	7
7	Explain Difference between break and continue with example	7
8	Explain switch case in detail	5
9	Explain Difference between Nested If and If..else ladder with example	5
10	Explain Looping statements/ Loops in detail	7
		7
	Unit-2 Java Basics(Refer PPT-Chapter-2 and 3)	
1	Give Definition of: classes, objects, Local variables , Instance variables, Class variables, constructor, this keyword, Reference variable , static variable,static method	
2	Explain all constructors in detail	7
3	Explain this keyword in detail with example	5
4	What is constructor overloading? Explain it in detail.	5/7
5	Explain constructor vs method overloading.	5
6	Explain Method overloading in detail	5
7	Explain Recursion in detail	5
8	Explain Static keyword in detail	7
9	Explain finalize() method in detail	5
10	Explain Access/visibility Modifiers in detail / What is scope of variable?	7
11	Explain Nested Class in detail.	7
12	Explain Abstraction(Abstract classes and Abstract Methods) in detail	5
13	Explain Anonymous Inner Class in detail	5
14	Explain types of array in detail	7

Atmiya University

15	Difference between String class and StringBuffer class	7
16	Explain all operations on String in detail	5
17	Explain all operations on String using StringBuffer class methods in detail	7
18	Explain Wrapper class in detail	7
19	Explain Command Line Arguments in detail	5
20	Difference between Mutable and Immutable String	1
21		

22	Explain data field encapsulation in java
	Encapsulation in Java is an object-oriented procedure of combining the data members and data methods of the class inside the user-defined class. It is important to declare this class as private.
	For enhancing the understanding of the encapsulation process, let us go through the following sample program.
	Example:
	package dc;
	public class c
	{
	public static void main (String[] args)
	{
	Employee e = new Employee();
	e.setName("Robert");
	e.setAge(33);
	e.setEmpID(1253);
	System.out.println("Employee's name: " + e.getName());
	System.out.println("Employee's age: " + e.getAge());
	System.out.println("Employee's ID: " + e.getEmpID());
	}
	}
	package dc;
	public class Employee {
	private String Name;
	private int EmpID;
	private int Age;
	public int getAge() {
	return Age;
	}
	public String getName() {
	return Name;
	}
	public int getEmpID() {
	return EmpID;
	}
	public void setAge(int newAge) {	

Atmiya University

	Age = newAge;
	}
	public void setName(String newName) {
	Name = newName;
	}
	public void setRoll(int newEmpID) {
	EmpID = newEmpID;
	}
	public void setEmpID(int EmpID) {
	}
	}
	//
	Output:
	Employee's name: Robert
	Employee's age: 33
	Employee's ID: 1253	

	Unit-3 Inheritance and Abstraction.(But Abstraction we have covered mostly in Unit-2) Refer PPT-Chapter-4	
1	Explain types Inheritance in detail	7
2	Explain Super keyword in detail	5
3	Explain Method overriding in detail	5
4	How to Stop Inheritance in java using final keyword/method	5
5	Explain Instance of operator in detail.	5
6	Class interface relationship	1
7	Explain Interface with Dynamic method Dispatch in detail.	5
8	Explain Object class in Java	5
9	Difference between Abstract class Vs Interface	5
10	Why Java Doesn't support multiple Inheritance? What we use instead of it	7
11	Difference between Method overloading Vs method Overriding.	5
12	Interface Creation and Implementation Interfaces, Interface inheritance.	7
	Unit-4 Exception handling, IO Programming.(Refer PPT-Chapter-5 and Chapter-6)	
	Chapter-5	
1	What is Exception? Exceptions and errors, types of exception.	7
2	Exception handling using try and catch block.	5
3	Difference between throw throws and finally.	5
4	Custom Exception.	5
5	Nested Try catch.	5
6	types of exception	5

Atmiya University

	Chapter-6	
1	Types of Streams in Java, byte stream, character stream.	5
2	Explain FileInputStream, FileOutputStream class in detail with example	7
3	Explain FileReader, FileWriter class in detail with example	7
4	Explain BufferedReader, BufferedWriter class in detail with example	7
5	Explain File class' methods in detail with example	7
6	Explain OutputStreamWriter & InputStreamReader	5
	Unit-5 Thread (Refer PPT Chaper-7)	
1	Explain two ways to create threads.	7
2	Explain Life Cycle of threads	7
3	Explain Thread Priority in detail.	7
5	Explain Thread Synchronization in thread	7
6	What is the use of sleep(), suspend() and wait() method.	5
7	What is difference between Process and Thread?	1
	Miscellaneous	
1	Explain Package in detail	7
2	Explain all the OOPS concepts in detail(main 4 concepts of oops- Abstraction, encapsulation, inheritance, and polymorphism) refers extra ppt given by me	7

Atmiya University

Information Technology Department
B.Tech. SEM.-IV

Subject: Computer Networks
(21BTITCC40)
Question Bank

Unit:1

1. What is a computer network, and why is it important?
2. What are the key components of a computer network?
3. Explain the different types of networks (LAN, MAN, WAN).
4. What is the difference between client-server and peer-to-peer architectures?
5. Define network topology and explain its types (e.g., star, bus, ring, mesh).
6. What is the OSI reference model? Describe its seven layers.
7. How does the OSI model differ from the TCP/IP model?
8. What is data encapsulation in networking?
9. Explain the concepts of bandwidth, latency, and throughput.
10. What are network protocols, and why are they necessary?
11. What is the purpose of a MAC address and an IP address?

Unit:2

1. What are the main responsibilities of the physical layer?
2. Explain analog and digital signals in networking.
3. What is the Nyquist theorem, and why is it significant?
4. Define modulation and explain its types (e.g., AM, FM, PM).
5. What is the difference between guided and unguided media? Provide examples.
6. Explain the working of fiber-optic cables and their advantages.
7. What are the functions of the data link layer in the OSI model?
8. Explain error detection and correction methods (e.g., CRC, parity check).

9. What is framing, and why is it important in the data link layer?
10. Describe the working of the Stop-and-Wait ARQ protocol.
11. What is Ethernet, and how does it work?
12. Explain the concept of MAC addressing and how it differs from IP addressing.

Unit:3

1. What are the main responsibilities of the network layer?
2. Define and explain the concept of IP addressing.
3. What is the difference between IPv4 and IPv6? List their features.
4. How does subnetting work? Provide an example.
5. What is the purpose of a default gateway in networking?
6. Explain the process of routing. What are routing tables?
7. What are the differences between static and dynamic routing?
8. Compare and contrast distance-vector and link-state routing algorithms.
9. What is the difference between interior and exterior gateway protocols?
10. Explain the purpose and working of the OSPF protocol.
11. What is Network Address Translation (NAT), and how does it work?
12. What is a VPN, and how does it ensure secure communication?

Unit:4

1. What are the main functions of the transport layer in the OSI model?
2. What is the difference between connection-oriented and connectionless communication?
3. Explain the working of TCP and UDP. How do they differ?
4. Describe the three-way handshake process in TCP.
5. What is flow control, and how does TCP handle it?
6. Explain congestion control mechanisms in the transport layer.
7. What is the difference between port numbers and IP addresses?
8. How do socket programming and APIs relate to the transport layer?
9. Explain the concept of multiplexing and demultiplexing in the transport layer.
10. What is a sliding window protocol, and how does it work?
11. Describe the differences between the Go-Back-N ARQ and Selective Repeat ARQ protocols.
12. How does the transport layer ensure reliable data transfer?

Atmiya University

Unit:5

1. What are the primary functions of the application layer in the OSI model?
2. Explain the working of common application layer protocols (e.g., HTTP, FTP, DNS, SMTP).
3. What is the purpose of DNS, and how does it resolve domain names to IP addresses?
4. How does the HTTP protocol work? What is the difference between HTTP and HTTPS?
5. What is the role of SMTP, POP3, and IMAP in email communication?
6. Explain the purpose of SNMP and its significance in network management.
7. What is the concept of cookies and their role in web communication?
8. Define network security and explain its importance.
9. What are firewalls, and how do they protect networks?
10. Explain symmetric and asymmetric encryption with examples.
11. What is SSL/TLS, and how does it secure communication?
12. Describe the working of a Virtual Private Network (VPN).
13. What is the difference between a virus, worm, and Trojan horse in networking?

ATMIYA UNIVERSITY, RAJKOT
Information Technolog Engineering Department

B.Tech. SEM.-V
Subject: Core 13: P thon Programming-21BTITCC504

Question Bank

Unit-1 Operators and variable,datatypes:

1. Give the various data types in Python.
2. Point Out the rules to be followed for naming any identifier.
3. Assess a program to assign and access variables.
4. Compose the importance of indentation in python.
5. Select and assign how an input operation was done in python.
6. Demonstrate the various operators in python.
7. Discover the difference between logical and bitwise operator.
8. Illustrate a program to display different data types using variables and literal constants.
9. Show how an input and output function is performed in python with an example.
10. Explain in detail about the various operators in python with suitable examples.
11. Discuss the difference between tuples and list
12. Discuss the various operation that can be performed on a tuple and Lists (minimum 5)with an example program.
13. How the area of circle is calculated explain with an example.
14. Describe a program to calculate student result based on two examinations, one sports event and three activities conducted. The weightage of the activity = 30%, sports =20%, and examination=50%
15. Demonstrate the various expressions in python with suitable examples.
16. What is membership and identity operators.
17. Write a program to perform addition, subtraction, multiplication, integer division, floor division and modulo division on two integer and float.
18. Justify the effects of slicing operations on an array
19. How to access the elements of an array using index?

Unit-2- List,tuples,dictionary:

20. Enumerate the list and its methods with example.
21. Elucidate the string and its methods with example.

Atmiya University

23. Differentiate between the tuple and sets in python.
24. Implement the python program to calculate total and average marks based on input.
    a. What is python List ?Describe the List usage with Remembering BTL1 suitable examples
    b. Write a program to illustrate the heterogeneous list
25. Describe the following 2 a) Creating the List Remembering BTL1 b) Accessing values in the Lists c) Updating the Lists d) Deleting the list Elements.
26. Explain the basic List Operations in 3 details with necessary programs.
27. What are the advantages of tuple over list?
28. Classify the Python accessing Elements in a tuples.
29. Point out the methods used in tuples.
30. How a tuple is iterated? Explain with an example.
31. Explain how tuples are used as return values?
32. Define dictionary with an example.
33. What are the properties of dictionary keys?
34. What is the use of all(), any(), cmp() and sorted() in dictionary?
35. List various types of operators in Python and write any 4 types of operators.
36. Explain in detail about Control flow structures in python.
37. Outline with an example the assignment and bitwise operators supported in Python.
38. Write a Python program to print prime number series up to N.
39. Write a Python program to Swapping of two numbers with and without using temporary variable.
40. If the age of Ram, Sam, and Khan are input through the keyboard, write a python program to determine the eldest and youngest of the three.
41. Arithmetic operations (Addition, Subtraction, Multiplication, and Division) on integers. Input the two integer values and operator for performing arithmetic operation through keyboard.
42. Write a python program to find the given number is odd or even.
43. Explain break and continue statement with the help of for loop with an example.
44. Explain the syntax of the following statements
    c. for loop
    d. while loop
    e. if - else
    f. if-elif-else
45. Develop a program to find the largest among three numbers.
46. Write a python program to find the given year is leap or not.
47. Write a python program to print factorial of a given number
48. Implement Python program to find sum of natural numbers

49. Define function? Write its syntax
50. What are formal and actual arguments
51. Write functions to do all arithmetic operations
52. What is recursive function?

Atmiya University

54. Write recursive function to find factorial of a number
55. Differentiate global and local variables
56. Narrate scope of a variable in a function
57. 4 digit integer is entered through the keyboard. Write a function to Calculate the sum of the 4 digit number both without recursion and using recursion
58. What are the cons of using functions
59. Write a function to display ASCII Code of entered character
60. Describe how an object is passed as parameter to a method.
61. Write a function to return right most digit in the entered number

Unit-3

62. How do we achieve code reusability in python? Write a python code to Explain code reusability
63. What is mean by Iterators and Generators?
64. Write about map and filter in Python? What are modules in Python?
65. How to create a module?
66. What is import statement in modules ?
67. Discuss the need and importance of function in python.
68. Illustrate a program to exchange the value of two variables with temporary variables
69. Briefly discuss in detail about function prototyping in python. With
70. suitable example program
71. Analyze the difference between local and global variables.
72. What is from import statement in modules ?
73. Explain about the import statement in modules
74. What are packages? Give an example of package creation in Python.
75. Write a small code to illustrate package in Python.
76. Write a function to display ASCII Code of entered character
77. Write a python code to check the given number is prime or not using modules
78. Explain package installation via PIP
79. Describe in detail about lambda functions or anonymous function
80. Describe in detail about lambda functions or anonymous function.
81. Describe in detail about the rules to be followed while using Lambda function.
82. Explain with an example program to return the average of its argument
83. Explain the various features of functions in python.
84. Describe the syntax and rules involved in the return statement in python
85. Write a program to calculate the simple interest using python.

Atmiya University

Unit-4

86. Compare class and object with python code
87. What is inheritance? Illustrate types of inheritance with python code.
88. Explain types of methods in python.
89. What is encapsulation explain in brief.
90. Explain abstract class in python in brief with example.
91. Write a class with following criteria Class name: Flower

    Objects: lilly, rose, hibiscus
    Properties: price,color,smell
    Methods: get(), display()

92. Narrate about polymorphism
93. Write about class constructor(_init_()),self-variable
94. Difference between object oriented vs procedure oriented programming language in brief.
95. What is an Exception? Explain types of exceptions and give an example.
96. How to create user defined exception in python with an example.
97. List some few common Exception types and explain when they occur
98. Difference between Raising and User defined exceptions in python?
99. Write a syntax for Handling Exceptions with example
    g. try
    h. try-except
    i. try-except-else
    j. try-except-else-finally
100. What is inheritance? Illustrate types of inheritance with python code
101. Types of error.
102. Use of Assert in python with example.
103. Use of logging in python with example.

Unit-5

104. What is searching? Explain with example program.
105. What is matching? Explain with example program.
106. Describe any one regular expression with an example?
107. Why we use Regular Expressions?
108. What are Regular Expressions?
109. Basic Regular Expressions operations
110. Email verification using Regular Expressions

Atmiya University

112. All the operation of regular expression explain in brief.
113. Explain sequence characters in regular expression.
114. Explain quantifiers in regular expression.
115. Explain special characters in list.

116. Give difference between data scientist and analysis.
117. What is data frame?
118. Explain types of graph in Data visualization (All graph with programming examples)
119. How to create data frame using excel and csv?

120. Explain types of testing in python.

Atmiya University

Information Technology Department
B.Tech. SEM.-VI

Subject: Cryptography & Network Security (21UFEDE605)
Question Bank

Unit 1: Introduction to Cryptography

1. What is cryptography, and why is it important in network security?
2. What are the basic objectives of cryptography (confidentiality, integrity, authentication, and non-repudiation)?
3. Explain the difference between symmetric and asymmetric cryptography.
4. What are plaintext and ciphertext? Provide examples.
5. Define and explain the concept of encryption and decryption.
6. What is the difference between block ciphers and stream ciphers?
7. What is the role of a key in cryptography?
8. Explain the concept of substitution and transposition ciphers.
9. What is the Caesar cipher? Provide an example of its encryption process.
10. How does the Vigenère cipher work? What are its limitations?
11. What is the importance of cryptanalysis in cryptography?
12. Compare classical and modern cryptographic techniques.

Unit 2: Symmetric Key Cryptography

1. What is symmetric key cryptography? Provide examples of algorithms.
2. Explain the working of the Data Encryption Standard (DES).
3. What is the difference between DES and Triple DES (3DES)?
4. How does the Advanced Encryption Standard (AES) work?
5. What are the key features and advantages of AES over DES?

6. Explain the modes of operation in symmetric cryptography (ECB, CBC, CFB, OFB, CTR).
7. What is the difference between a block cipher and a stream cipher?
8. How does the RC4 algorithm work? Why is it considered insecure now?
9. What is the concept of key generation and distribution in symmetric cryptography?
10. What are the weaknesses of symmetric key cryptography?

Unit 3: Asymmetric Key Cryptography

1. What is asymmetric key cryptography? How does it differ from symmetric key cryptography?
2. Explain the working principle of the RSA algorithm.
3. What are the key generation, encryption, and decryption steps in RSA?
4. What is the role of public and private keys in asymmetric cryptography?
5. How does the Diffie-Hellman key exchange algorithm work?
6. What are the limitations of the Diffie-Hellman algorithm?
7. What is the ElGamal encryption system?
8. How do digital signatures work, and why are they used?
9. What is the purpose of a hash function in digital signatures?
10. What are the advantages and disadvantages of asymmetric cryptography?

Unit 4: Hash Functions and Authentication

1. What is a hash function, and how does it work?
2. Explain the characteristics of a good hash function.
3. How do hash functions ensure data integrity?
4. What are common hash algorithms (e.g., MD5, SHA-1, SHA-256)?
5. Why is MD5 considered insecure, and how does SHA-256 improve upon it?
6. What is the purpose of Message Authentication Codes (MAC)?
7. Explain the difference between a hash function and a MAC.
8. How does the HMAC algorithm work?
9. What is the role of authentication protocols in network security?
10. Explain Kerberos authentication protocol and its working.
11. What are the differences between challenge-response authentication and password-based authentication?
12. What is the importance of salting in password security?

Unit 5: Network Security and Protocols

1. What is network security, and why is it essential in modern systems?
2. Explain the concept of firewalls and their types (e.g., packet-filtering, proxy, stateful inspection).
3. How does Intrusion Detection System (IDS) differ from Intrusion Prevention System (IPS)?
4. What is the Secure Sockets Layer (SSL) protocol? How does it ensure secure communication?
5. Explain the Transport Layer Security (TLS) protocol and its improvements over SSL.
6. What is HTTPS, and how is it related to SSL/TLS?
7. What is a Virtual Private Network (VPN), and how does it ensure secure communication?
8. Explain the concept of IPsec and its modes of operation (transport and tunnel mode).
9. What is the role of Public Key Infrastructure (PKI) in network security?
10. How does the Pretty Good Privacy (PGP) protocol work?
11. What are the common types of network attacks (e.g., DoS, MITM, phishing)?
12. Explain the purpose and working of secure email protocols like S/MIME and PGP.

ATMIYA UNIVERSITY, RAJKOT
Information Technology

B.Tech. SEM.-VII
Subject: Data Compression
(21BTITCC502)
Question Bank

Unit:1

1. Define data compression and its importance.
2. What are the key goals of data compression?
3. Differentiate between lossless and lossy compression.
4. Explain the concept of redundancy in data.
5. List some common applications of data compression.
6. Discuss the difference between source coding and channel coding.
7. Explain the trade-offs between compression ratio, speed, and quality in data compression.
8. Describe the significance of entropy in data compression with examples.
9. Compare and contrast static and adaptive compression techniques.

Unit:2

1. What is Shannon's entropy? How is it calculated?
2. Define mutual information in the context of data compression.
3. What is the relationship between entropy and redundancy?
4. Explain the concept of Huffman coding briefly.
5. What is the role of prefix codes in data compression?
6. Discuss the principles of information theory and their relevance to data compression.
7. Explain the concept of entropy coding with examples of Huffman and arithmetic coding.
8. How is entropy used to measure the efficiency of a compression algorithm?
9. Solve a problem to compute the entropy of a source given probabilities of symbols.

Unit:3

1. What is Golomb coding, and what is its primary application?
2. Explain the significance of the parameter m in Golomb coding.
3. How is the quotient calculated in Golomb coding?
4. Describe how Golomb coding handles symbols with varying probabilities.
5. What are the key differences between Golomb coding and Huffman coding?
6. What is Tunstall coding, and how does it differ from Golomb coding?
7. Explain the purpose of Tunstall trees in data compression.
8. What is the role of a dictionary in Tunstall coding?
9. How is the block size determined in Tunstall coding?
10. What is arithmetic coding, and how does it differ from Huffman coding?
11. Explain the concept of probability intervals in arithmetic coding.
12. Why is arithmetic coding considered a variable-length coding technique?
13. List the advantages of arithmetic coding over traditional coding methods.
14. What is the role of cumulative probability in arithmetic coding?

Unit:4

1. List some common lossless compression algorithms.
2. What is Run-Length Encoding (RLE)? Explain with an example.
3. Explain the concept of dictionary-based compression.
4. What is LZ77, and how does it work?
5. Differentiate between LZ77 and LZW algorithms.
6. Write a detailed explanation of Huffman coding with an example.
7. Describe the working of LZW (Lempel-Ziv-Welch) compression with an example.
8. Compare the performance of RLE, Huffman coding, and LZW for different types of data.
9. Solve a problem to encode and decode data using Huffman coding.

Unit:5

1. What is arithmetic coding, and how does it differ from Huffman coding?
2. Explain Burrows-Wheeler Transform (BWT) and its significance in compression.
3. What are fractal compression techniques, and where are they used?
4. Define the term "predictive coding" in the context of compression.
5. What is the role of wavelet transforms in modern compression algorithms?
6. Describe arithmetic coding in detail with a step-by-step example.
7. Explain how Burrows-Wheeler Transform (BWT) works and its application in data compression.
8. Compare predictive coding and transform coding for lossy compression.

ATMIYA UNIVERSITY, RAJKOT
I.T. Engineering Department

B.Tech. SEM.-VI
Subject: IoT
Question Bank

Unit: 1

Sr. No.	Question	Mark
1	Characteristics of IoT	4
2	Architectural view of IoT.	7
3	Conceptual view of IoT.	7
4	Explain physical view of IoT.	7
5	Explain logical design of IoT.	4
6	Write application of IoT.	4

Atmiya University

Unit: 2

Sr. No.	Question	Mark
1	Write difference between IoT and M2M.	7
2	Explain M2M value chain with its diagram.	4
3	Explain IoT value chain with its diagram.	4
4	Explain different data storage in IoT.	7
5	What is the critical storage technology used in IoT.	4
6	Write difference between Software Defined network and network function virtualization.	7

Unit: 3

Sr. No.	Question	Mark
1	What are the Web communication protocol for IoT devices.	4
2	What is CoAP(constrained application protocol) with necessary diagram.	7
3	Write a short note on Bluetooth and Bluetooth low energy protocol.	4
4	What is MQTT(Message query telemetry transport)?explain with diagram.	7
5	Write a short note on SoAP(Simple object access protocol) and write its characteristics.	4
6	What is REST (Representational state transfer)? Write advantage and disadvantage of REST.	4
7	What is RESTFULL? write difference between REST and RESTFULL. And why RESTFULL is used more.	7
8	Write difference between WebSocket and REST.	4
9	What are the different types of IoT.? Explain in brief with chart.	4

Atmiya University

UNIT: 4

Sr. No.	Question	Mark
1	Write a short note on sensor technology.	4
2	What is participatory sensing? Discuss in detail.	7
3	Write difference between IoT and IIoT.	4
4	Write a short note on automotive IoT.	7
5	What is information value loop? Explain with complete diagram.	4
6	Explain clustering protocol and genetic protocol.	4
7	Write a short note on radio frequency identification technology.	7
		4

UNIT: 5

Sr. No.	Question	Mark
1	Write a short note on smart sensor design and IoT gateway Design.	4
2	What are the functional and operational view of IoT design methodology.	7
3	Draw and explain IoT security and privacy architecture.	7
4	Write difference between raspberry pi and Arduino uno.	4
5	Explain smart city street light control and monitoring.	7

Atmiya University

Information Technology Department
B.Tech. SEM.-VII

Subject: Programming for Data Science (21BTITCC704)

Question Bank

Unit:1

1. What is R, and how is it different from other programming languages?
2. How do you install and load a package in R?
3. What are R's basic data types?
4. How do you assign values to variables in R?
5. How can you check the structure of an object in R?
6. What is the difference between `c()` and `list()` in R?
7. How do you create a vector in R?
8. How can you generate a sequence of numbers in R?
9. What is the difference between = and <- in R?
10. How do you comment code in R?

Unit:2

1. What are the control structures available in R?
2. How do you write a for loop in R?
3. How is an if-else statement written in R?
4. How does a while loop work in R?
5. What is the purpose of the break and next statements in loops?
6. What are the primary data structures in R?
7. What is the difference between a matrix and a data frame in R?
8. How do you create and manipulate a list in R?
9. What are factors, and when should you use them?
10. How do you access elements in a vector, matrix, or list?

Unit:3

1. How do you import data into R from a CSV file?
2. What are some common functions for summarizing data in R?
3. How do you filter rows and select columns in a data frame?
4. What is the difference between `apply()`, `lapply()`, `sapply()`, and `tapply()`?
5. How do you merge two data frames in R?
6. How do you handle missing values in R?

Unit:4

1. What are the basic plotting functions in R?
2. How do you create a scatter plot, bar chart, and box plot in R?
3. What is `ggplot2`, and why is it used?
4. How can you customize the aesthetics of a plot in R?
5. How do you save a plot as an image file?
6. How do you perform a linear regression in R?
7. What function is used to test for normality in a dataset?
8. How do you calculate summary statistics like mean, median, and standard deviation in R?
9. What is the difference between lm() and glm()?
10. How can you perform hypothesis testing in R?

Unit:5

1. How do you handle strings in R?
2. What is the purpose of the `paste()` and `paste0()` functions?
3. How do you extract substrings from a string in R?
4. What is the `grep()` function used for?
5. How do you split a string into parts in R?

6. What is the purpose of R scripts, and how do you execute them?
7. How do you write a custom function in R?
8. What are environments in R?
9. How does R handle object-oriented programming?
10. How do you debug a script in R?

ATMIYA UNIVERSITY, RAJKOT
Information Technology Department

B.Tech. SEM.-III
Subject: Data Structure (21BTITCC302)

Question Bank
Unit:1

Introduction to Basic data structure

1.Define primitive and non-primitive data structure with examples
2Explain different types of Data Structure

Unit:2

Linear Data Structure

1) Algorithm for push, pop, peep, update and display in stack
2) Algorithm for insert, delete, update and display in queue
3) Infix-postfix Conversions sums
4) Steps to convert infix expression into postfix
5) Infix-prefix Conversions sums
6) Postfix evaluation sums
7) What is recursion?
8) How recursion can be implemented using stack?
9) Factorial program using recursion
10) Applications of stack and queue
11) Circular queue (only theory and examples)
12) Difference between simple queue and circular queue
13) Examples for insertion, deletion of circular queue (finding front and rear positions)
14) What is priority queue and de-queue

Atmiya University

15) Algorithm of insert-begin, Insert end in singly linked list
16) Algorithm of delete-begin delete end in singly linked list
17) Algorithm of insert-begin, Insert end in circular singly linked list
18) Algorithm of delete-begin delete end in circular singly linked list
19) Algorithm of insert-begin, Insert end in doubly linked list 6. Algorithm of delete-begin delete end in doubly linked list
20) Algorithm of insert-begin, Insert end in circular doubly linked list
21) Algorithm of delete-begin delete end in circular doubly linked list
22) Theory of linked list with examples Difference between all linked list
23) Applications of linked list

Unit:3

Non Linear Data Structure

1. Basic tree terminologies like what is tree, what is node, what is edge etc.
2. Binary tree concepts
3. What is binary search tree? What are its features?
4. In-order, pre-order and post-order traversal in binary tree
5. Binary search tree with examples
6. Basic graph terminologies like what is graph, un-directed graph, and weighted graph
7. Spanning tree using prim's and kruskal's algorithm
8. Graph traversal using depth first search and breadth first search
9. Finding shortest path using dijaktra' algorithm
10. Applications of tree and graph

Unit:4

Hashing:

1. What is hash table and hash function
2. Explain Different types of hashing techniques with theory and examples
3. Example of finding hash value
4. Hash collision-resolution techniques

Unit:5

Algorithm Design Techniques:

1. What is an algorithm?
2. What is space and time complexity?
3. Explain different types of algorithm design techniques
4. Sorting examples (bubble sort, selection sort, merge sort and quick sort)
5. Difference between Binary search and sequential search
6. Example of binary search

ATMIYA UNIVERSITY, RAJKOT
Information Technology

B.Tech. SEM.-VII
Subject: Database Management System (21BTITCC301)
Question Bank

Unit:1

1. Define Database Management System (DBMS). How does it differ from a file system?
2. Explain the advantages and disadvantages of DBMS.
3. What is the difference between data, database, and DBMS? Provide examples.
4. Discuss the three-schema architecture in DBMS.
5. Explain the concept of data independence (logical and physical).
6. What are the main functions of a database administrator (DBA)?
7. Differentiate between structured, semi-structured, and unstructured data.

Unit:2

1. Define a data model. List and explain various types of data models in DBMS.
2. What is an entity-relationship (ER) model? Explain its components with examples.
3. Design an ER diagram for a library management system.
4. Explain the concept of primary key, foreign key, candidate key, and superkey with examples.
5. What is the difference between weak and strong entities? Provide an example.
6. Explain the relational model and its characteristics.
7. Define the terms: tuple, attribute, and relation with examples.

Unit:3

1. Define normali□ ation. Why is it necessary in database design?
2. Explain 1NF, 2NF, and 3NF with examples.
3. What is Boyce-Codd Normal Form (BCNF)? How does it differ from 3NF?
4. What is functional dependency? Explain its role in normali□ ation.
5. Discuss the differences between de normali□ ation and normali□ ation.
6. What are anomalies in databases? Explain insertion, deletion, and update anomalies.

Unit:4

1. Define a database transaction. What are its properties (ACID)?
2. What is the difference between COMMIT and ROLLBACK?
3. Explain the concept of concurrency control in DBMS. Why is it necessary?
4. What are locks in DBMS? Differentiate between shared and exclusive locks.
5. Explain the two-phase locking protocol.
6. What is deadlock in DBMS? How can it be prevented?

Unit:5

1. What is SQL? Explain its purpose and importance in database management.
2. Define and differentiate DDL, DML, DCL, and TCL with examples.
3. Write SQL queries to:

a. Create a table named Students with columns Student_ID, Name, Age, and Course.
b. Insert records into the Students table.
c. Delete all records where Age is less than 18.

4. Explain the purpose of the SELECT statement. Write a query to fetch all records from a table named Employees.
5. Differentiate between the WHERE and HAVING clauses.
6. What is a primary key? How do you define it in a table?

ATMIYA UNIVERSITY, RAJKOT
Information Technology

B.Tech. SEM.-VII
Subject: Operating System
(21BTITCC401)
Question Bank

Unit:1

1. Define an operating system. List its primary functions.
2. Differentiate between system software and application software.
3. What is the kernel? Explain its role in the operating system.
4. Describe the differences between a monolithic kernel and a microkernel.
5. List the types of operating systems and give one example of each.
6. Explain the concept of system calls and provide examples.

Unit:2

1. Define a process and differentiate it from a program.
2. Explain the states of a process with a suitable diagram.
3. What is a Process Control Block (PCB)? Mention its components.
4. Differentiate between preemptive and non-preemptive scheduling.
5. Describe Round Robin scheduling with an example.
6. Write a short note on Interprocess Communication (IPC).
7. Explain the difference between threads and processes.

Unit:3

1. List and explain the criteria for CPU scheduling.
2. Discuss First-Come-First-Served (FCFS) scheduling and its drawbacks.
3. Solve a Gantt chart problem for the Shortest Job First (SJF) algorithm.
4. How does the Priority Scheduling algorithm work? Provide an example.
5. Describe the concept of multilevel queue scheduling.
6. Define deadlock. What are its necessary conditions?
7. Describe the deadlock prevention techniques.
8. Explain deadlock detection and recovery methods.
9. Differentiate between deadlock avoidance and deadlock prevention.
10. Illustrate the Banker□s Algorithm with an example.

Unit:4

1. What is the role of memory management in an operating system?
2. Explain paging and segmentation with diagrams.
3. Define internal and external fragmentation with examples.
4. What is virtual memory? Discuss its advantages.
5. Explain the page replacement algorithms: FIFO, LRU, Optimal
6. Solve a numerical example for page replacement using FIFO and LRU.

Unit:5

1. What is a file system? List its major responsibilities.
2. Explain the different types of file systems used in operating systems.
3. Define and differentiate between contiguous, linked, and indexed file allocation methods.
4. What are inodes in a file system? Explain their significance.
5. Write a short note on journaling file systems.
6. What is an I/O subsystem in an operating system? Explain its components.
7. Discuss how buffering is used in I/O management.
8. Explain spooling with an example.
9. Describe the concept of Direct Memory Access (DMA).
10. Differentiate between synchronous and asynchronous I/O.

Cloud Comuting(21BTITCC503)
Questions Bank

	UNIT-1
1	Define cloud computing and state it's desirable features
2	Write History of Cloud computing.
3	Explain architecture of cloud computing
4	Explain different types of Cloud.
5	Explain different Risk involved in cloud computing
6	Explain Cloud computing characteristics and benefits.
	UNIT-2
7	What is a Hypervisor? How Type-1 and Type-2 Hypervisor works?
8	What is Cloud and Cloud Computing? Differentiate Conventional Computing and Cloud Computing.
9	What are service elasticity and service orchestration in cloud computing? What are the issues of Software as a Service (SaaS)?
10	Explain IAAS, PAAS, and SAAS in details.
11	**Compare different cloud service provider**
	UNIT-3
12	What is Virtualization? What is the role of virtualization in cloud computing? Which form of virtualization is used in cloud for effective resource utilization?
13	What is Amazon Glacier? How does it work? Differentiate Glacier and S3.
14	Differentiate Full and Para Virtualization. Why operating system is needed to be modified in Para Virtualization? How does Hardware Assisted Virtualization work?
15	Define load balancing. What is need of loan balancing in cloud computing.
16	Explain Event management in detail
17	Explain different cloud calendar in detail
18	Explain event schedule in cloud management system.
	UNIT-4
19	What are the functionalities of Identity and Access Management (IAM) ?
20	What are security vulnerabilities of the public cloud platform? How does Amazon cloud handle security issues?

Atmiya University

21	Discuss limitation of IAM in AWS.
22	Write short note on AWS Security.
23	Write short note on DATA Security.
24	Write short note on Application Security.
25	Write short note on Application security threat in cloud computing.
UNIT-5	
26	Explain Pod, silos and aggregations in terms of Cloud
27	Write a note on AWS Ecosystem
28	Write a note on AWS Security

Atmiya University

ATMIYA UNIVERSITY, RAJKOT
Information Technology

B.Tech. SEM.-VII
Subject: Distributed Database Management System (21BTITCC505)
Question Bank

Unit:1

1. Define Distributed Database Management System (DDBMS). How is it different from a centrali□ ed DBMS?
2. Explain the advantages and disadvantages of distributed databases.
3. What are the main design goals of a distributed database system?
4. Discuss the types of distributed databases with examples.
5. Explain the concept of data fragmentation, replication, and allocation in distributed databases.
6. What are the key factors to consider during the design of a distributed database system?
7. Explain hori□ ontal, vertical, and hybrid fragmentation with examples.
8. How do you ensure data consistency in a distributed database system?
9. Describe the role of schema design in distributed databases.
10. Discuss the allocation strategies used in distributed databases.

Unit:2

1. What is query processing in the context of distributed databases?
2. Explain how distributed query optimi□ ation is performed.
3. What are semi-joins? How are they useful in distributed query optimi□ ation?
4. Discuss the challenges involved in query processing in a distributed database.

Unit:3

1. Define a transaction in the context of a database. How is it different in a distributed system?
2. Explain the ACID properties in a distributed database.
3. What is a two-phase commit protocol? Discuss its role in distributed transaction management.
4. Discuss the issues of concurrency control in distributed systems.
5. Explain timestamp ordering and locking mechanisms in distributed databases.
6. What are the common security challenges in distributed database systems?
7. Discuss encryption techniques used in distributed databases.
8. Explain the role of authentication and authori□ ation in securing distributed databases.
9. How does a distributed database ensure the integrity and confidentiality of data?
10. What is the importance of auditing in distributed databases?

Unit:4

1. Explain the failure types that occur in a distributed database system.
2. How does a distributed database handle system failures and recovery?
3. What is the role of checkpoints in distributed database recovery?
4. Discuss the process of log-based recovery in distributed systems.
5. Explain the concept of shadow paging in recovery.

Unit:5

1. How does cloud computing impact distributed databases?
2. Discuss the role of distributed databases in big data analytics.
3. Compare NoSQL databases with traditional distributed databases.
4. Explain how blockchain technology utili□ es distributed databases.
5. What is the significance of edge computing in distributed databases?

ATMIYA UNIVERSITY
(Established under the Gujarat Private University Act 11, 2018)
Yogidham Gurukul, Kalawad Road, Rajkot - 360005, Gujarat (INDIA)

ATMIYA UNIVERSITY, RAJKOT

I.T. Engineering Department

B.Tech. SEM.- VI

Subject Name: Advanced java

(21BTITCL601)

Question Bank

Atmiya University

Unit: 1	
Sr. No.	**Question**
1	Discuss the difference between the Socket and ServerSocket class.
2	Write a client-server program using UDP socket. Client send list of N numbers to server and server respond the sum of N numbers.
3	Write a client-server program using UDP socket. Client send the list of N strings and server responds the concatenation of those strings.
4	Write a client server program using TCP where client sends a string and server checks whether that string is palindrome or not and responds with appropriate message.
5	Write a client-server program using TCP or UDP where the client sends 10 numbers and server responds with the numbers in sorted order.
6	What is Server Socket?How it works in java?Explain it with the help of example.
7	What is Datagram Socket? Explain it with the help of example.
8	Write a client server program using TCP where client sends two numbers and server responds with sum of them.
9	Discuss the URL and URLConnection class with their use in network programming.
10	URLConnection class

Atmiya University

11	DatagramSocket and DatagramPacket class
12	Explain Socket, ServerSocket, InetAddress classes. Write a java program to find an IP address of the machine on which the program runs.
13	Explain PreparedStatement and CallableStatement with Example
14	What is JDBC? List out all various types of JDBC Driver. Explain Thick and Thin drivers. Write code for each type of JDBC connection.
15	Explain SQLException class.
16	Explain Statement interface with example.
17	Explain Transaction management in JDBC.
18	Explain commit(),rollback() and SavePoint in JDBCwith an example
20	What is the full form of UDP and TCP
21	What is the difference between UDP and TCP
22	which protocol is connection oriented among udp and tcp?
23	which protocol is connection less among udp and tcp?
24	what is I-net address?
25	what is the full form of jdbc
26	which package is used for jdbc programming
27	write the syntax of select/update/insert/delete queries in jdbc

Atmiya University

28	what is roll back
29	what is savepoint
30	what is the purpose of sql-exception class?
31	what is the meaning of commit in jdbc transaction?
32	List all driver types in jdbc

Unit: 2

Sr. No.	Question
1	Design a form to input details of an employee and submit the data to a servlet. Write code for servlet that will save the entered details as a new record in database table Employee with fields (EmpId, EName, Email, Age).
2	Explain use of ServletConfig and ServletContext objects with examples.
3	Write a servlet that redirect requests alternatively to JSP Pages named Odd and Even.
4	What is Request Dispatcher? What is the difference between Request dispatcher's forward() and include() method?
5	Explain various Session tracking mechanisms in servlet with examples of each

Atmiya University

6	What is a session? List the different ways to manage the session.
7	Discuss the possible uses of the ServletContext and ServletConfig object.
8	Write a servlet RegistrationServlet to get the values from registration.html html page and display the contents. Write the web.xml file.?
9	Briefly explain the Servlet life cycle.
10	Write a Login servlet. Take input username and password from html file login.html and authenticate the user. Write the web.xml.
11	Differentiate the followings: (Any Three) (I) GenericServlet vs HttpServlet (II) doGet() vs doPost() (III) Servlets vs CGI (IV) Session and Cookie (V) JSP vs Servlet
12	Explain Request and Response object in Servlet.
13	Write a Java Servlet to demonstrate the use of Session Management.
14	Explain Servlet Life Cycle with examples to demonstrate every state.

Atmiya University

15	Write a servlet which accepts two numbers using POST methods and display the maximum of them.
16	Describe the servlet life cycle with life cycle methods.
17	Write a Web application using servlet to find the sum of all the digits of an input integer.
18	What is servlet configuration? Show it with an example web.xml file.
19	What are cookies? Write a servlet that reads and prints all the previous cookies and add a cookie with your name.
20	List JSP implicit objects and explain any two.
21	Briefly explain JSP life cycle.
22	List the JSTL core tags and explain any four with examples.
23	Write a login.jsp page to get the login information from the user and authenticate user with the database with JSTL SQL tags.
24	Explain use of <jsp:useBean> action tag with example.

Atmiya University

25	Write a JSP program using JSTL SQL taglib to display student details in tabular form by iterating through the database ta2ble student.
26	Explain JSTL core tags.
27	Explain the JSP Tag library with examples.
28	Explain the action tags used to access the JavaBeans from a JSP page with examples.
29	Explain JSP (i) page (ii) include (iii) taglib directive with attribute, description. Also write examples of java snippet for each directive.
30	Explain JSP Object scope: (i) Page (ii) Request (iii) Session (iv) Application with example.
31	Explain various tags in JSTL with example : (i) Core (ii)XML -
32	Explain various tags in JSTL with example : (i)SQL (ii) Functions
33	Draw and explain JSP architecture.
34	Compare SQL Tag Library.
35	What is a session object in JSP? Explain it with an example.
36	Explain Life cycle of JSP. -
37	Explain the JSP core tag library.
38	Show the use of JSP inbuilt objects: request and response, with their use in application.
39	Show the use of the JSP page directive tag with its attributes. -
40	Explain the JSP implicit objects with their use.
41	what is the full form of JSP

Atmiya University

42	List different Jsp tags
43	Give 2 methods for used for an http request?(Ans- get and post)
44	list different servlet object scope?(Ans- page, object, request, application)
45	Give the syntax/ example of (any) jsp/jstl tag
46	Name the configuration file for using servlet(Ans- web.xml)

Unit: 3

Atmiya University

Sr. No.	Question
1	List the JSF facelets tags and explain any two.
2	List the JSF validation tags and explain any two.
3	Explain JSF life cycle phases.
4	Draw the JSF request processing life cycle and briefly give the function of each phase.
5	Explain JSF Standard Component in detail.
6	Write a short note on JSF Facelets.
7	what is the full form of JSF
8	List JSF tags
9	Give the syntax/example of using jsf validation tag
10	Give the syntax/example of using jsf converter/action/bean tag

‘

Atmiya University

Unit: 4

Sr. No.	Question
1	What is hibernate? List the advantages of hibernate over JDBC
2	Develop a program to get all students' data from a database using hibernate. Write necessary xml files
3	Explain architecture of Hibernate.
4	What is O/R Mapping? How it is implemented using Hibernate. Explain with examples.
5	What is HQL? How does it differ from SQL? Give its advantages.
6	Give full form of hql and sql
7	List different hql query
8	Name the xml file for creating hibernate projects
9	What is the full form of ORM in hibernate?
10	what is the full form of POJO class in hibernate
11	Name the java class used for getter setter method(Ans- bean class)

Atmiya University

Unit: 5

Sr. No.	Question
1	Explain spring framework and its advantages
2	Explain the history of spring and who developed it?
3	write any simple example of spring framework with all its configuration details?
4	Explain spring Jdbc template class and its use with one example
5	What is spring ORM?
6	Explain different spring modules?
7	Who developed spring framework
8	what is the full form of AOP in spring?
9	LIst different spring modules
10	what is the full form of MVC in spring?
11	what is the full form of JMS in spring?

Atmiya University

ATMIYA UNIVERSITY, RAJKOT
Information Technology

B.Tech. SEM.-IV

Subject: Core 8:
Object Oriented Programming using JAVA (F) 21BTITCC403

Question Bank

	Unit-1 Evolution and fundamentals of Java.(Refer PPT-chapter-1)	
1	What is JVM Explain it in detail.	5/7
2	What is JVM Explain it in detail.	5/7
3	What is Byte code?	1
4	Explain Data type in detail.	7
5	Explain All operators in detail.	7
6	Explain all control statements in detail.	7
7	Explain Difference between break and continue with example	7
8	Explain switch case in detail	5
9	Explain Difference between Nested If and If..else ladder with example	5
10	Explain Looping statements/ Loops in detail	7
		7
	Unit-2 Java Basics(Refer PPT-Chapter-2 and 3)	
1	Give Definition of: classes, objects, Local variables , Instance variables, Class variables, constructor, this keyword, Reference variable , static variable,static method	
2	Explain all constructors in detail	7
3	Explain this keyword in detail with example	5
4	What is constructor overloading? Explain it in detail.	5/7
5	Explain constructor vs method overloading.	5
6	Explain Method overloading in detail	5
7	Explain Recursion in detail	5
8	Explain Static keyword in detail	7
9	Explain finalize() method in detail	5
10	Explain Access/visibility Modifiers in detail / What is scope of variable?	7
11	Explain Nested Class in detail.	7
12	Explain Abstraction(Abstract classes and Abstract Methods) in detail	5
13	Explain Anonymous Inner Class in detail	5
14	Explain types of array in detail	7

Atmiya University

15	Difference between String class and StringBuffer class	7
16	Explain all operations on String in detail	5
17	Explain all operations on String using StringBuffer class methods in detail	7
18	Explain Wrapper class in detail	7
19	Explain Command Line Arguments in detail	5
20	Difference between Mutable and Immutable String	1
21		

22	Explain data field encapsulation in java
	Encapsulation in Java is an object-oriented procedure of combining the data members and data methods of the class inside the user-defined class. It is important to declare this class as private.
	For enhancing the understanding of the encapsulation process, let us go through the following sample program.
	Example:
	package dc;
	public class c
	{
	public static void main (String[] args)
	{
	Employee e = new Employee();
	e.setName("Robert");
	e.setAge(33);
	e.setEmpID(1253);
	System.out.println("Employee's name: " + e.getName());
	System.out.println("Employee's age: " + e.getAge());
	System.out.println("Employee's ID: " + e.getEmpID());
	}
	}
	package dc;
	public class Employee {
	private String Name;
	private int EmpID;
	private int Age;
	public int getAge() {
	return Age;
	}
	public String getName() {
	return Name;
	}
	public int getEmpID() {
	return EmpID;
	}
	public void setAge(int newAge) {	

Atmiya University

	Age = newAge;
	}
	public void setName(String newName) {
	Name = newName;
	}
	public void setRoll(int newEmpID) {
	EmpID = newEmpID;
	}
	public void setEmpID(int EmpID) {
	}
	}
	//
	Output:
	Employee's name: Robert
	Employee's age: 33
	Employee's ID: 1253	

	Unit-3 Inheritance and Abstraction.(But Abstraction we have covered mostly in Unit-2) Refer PPT-Chapter-4	
1	Explain types Inheritance in detail	7
2	Explain Super keyword in detail	5
3	Explain Method overriding in detail	5
4	How to Stop Inheritance in java using final keyword/method	5
5	Explain Instance of operator in detail.	5
6	Class interface relationship	1
7	Explain Interface with Dynamic method Dispatch in detail.	5
8	Explain Object class in Java	5
9	Difference between Abstract class Vs Interface	5
10	Why Java Doesn't support multiple Inheritance? What we use instead of it	7
11	Difference between Method overloading Vs method Overriding.	5
12	Interface Creation and Implementation Interfaces, Interface inheritance.	7
	Unit-4 Exception handling, IO Programming.(Refer PPT-Chapter-5 and Chapter-6)	
	Chapter-5	
1	What is Exception? Exceptions and errors, types of exception.	7
2	Exception handling using try and catch block.	5
3	Difference between throw throws and finally.	5
4	Custom Exception.	5
5	Nested Try catch.	5
6	types of exception	5

Atmiya University

	Chapter-6	
1	Types of Streams in Java, byte stream, character stream.	5
2	Explain FileInputStream, FileOutputStream class in detail with example	7
3	Explain FileReader, FileWriter class in detail with example	7
4	Explain BufferedReader, BufferedWriter class in detail with example	7
5	Explain File class' methods in detail with example	7
6	Explain OutputStreamWriter & InputStreamReader	5
	Unit-5 Thread (Refer PPT Chaper-7)	
1	Explain two ways to create threads.	7
2	Explain Life Cycle of threads	7
3	Explain Thread Priority in detail.	7
5	Explain Thread Synchronization in thread	7
6	What is the use of sleep(), suspend() and wait() method.	5
7	What is difference between Process and Thread?	1
	Miscellaneous	
1	Explain Package in detail	7
2	Explain all the OOPS concepts in detail(main 4 concepts of oops- Abstraction, encapsulation, inheritance, and polymorphism) refers extra ppt given by me	7

Atmiya University

ATMIYA UNIVERSITY, RAJKOT
Information Technology

B.Tech. SEM.-IV

Subject: Core 8:
Object Oriented Programming using JAVA (F) 21BTITCC403

Question Bank

	Unit-1 Evolution and fundamentals of Java.(Refer PPT-chapter-1)	
1	What is JVM Explain it in detail.	5/7
2	What is JVM Explain it in detail.	5/7
3	What is Byte code?	1
4	Explain Data type in detail.	7
5	Explain All operators in detail.	7
6	Explain all control statements in detail.	7
7	Explain Difference between break and continue with example	7
8	Explain switch case in detail	5
9	Explain Difference between Nested If and If..else ladder with example	5
10	Explain Looping statements/ Loops in detail	7
		7
	Unit-2 Java Basics(Refer PPT-Chapter-2 and 3)	
1	Give Definition of: classes, objects, Local variables , Instance variables, Class variables, constructor, this keyword, Reference variable , static variable,static method	
2	Explain all constructors in detail	7
3	Explain this keyword in detail with example	5
4	What is constructor overloading? Explain it in detail.	5/7
5	Explain constructor vs method overloading.	5
6	Explain Method overloading in detail	5
7	Explain Recursion in detail	5
8	Explain Static keyword in detail	7
9	Explain finalize() method in detail	5
10	Explain Access/visibility Modifiers in detail / What is scope of variable?	7
11	Explain Nested Class in detail.	7
12	Explain Abstraction(Abstract classes and Abstract Methods) in detail	5
13	Explain Anonymous Inner Class in detail	5
14	Explain types of array in detail	7

Atmiya University

15	Difference between String class and StringBuffer class	7
16	Explain all operations on String in detail	5
17	Explain all operations on String using StringBuffer class methods in detail	7
18	Explain Wrapper class in detail	7
19	Explain Command Line Arguments in detail	5
20	Difference between Mutable and Immutable String	1
21		

22	Explain data field encapsulation in java
	Encapsulation in Java is an object-oriented procedure of combining the data members and data methods of the class inside the user-defined class. It is important to declare this class as private.
	For enhancing the understanding of the encapsulation process, let us go through the following sample program.
	Example:
	package dc;
	public class c
	{
	public static void main (String[] args)
	{
	Employee e = new Employee();
	e.setName("Robert");
	e.setAge(33);
	e.setEmpID(1253);
	System.out.println("Employee's name: " + e.getName());
	System.out.println("Employee's age: " + e.getAge());
	System.out.println("Employee's ID: " + e.getEmpID());
	}
	}
	package dc;
	public class Employee {
	private String Name;
	private int EmpID;
	private int Age;
	public int getAge() {
	return Age;
	}
	public String getName() {
	return Name;
	}
	public int getEmpID() {
	return EmpID;
	}
	public void setAge(int newAge) {	

Atmiya University

	Age = newAge;
	}
	public void setName(String newName) {
	Name = newName;
	}
	public void setRoll(int newEmpID) {
	EmpID = newEmpID;
	}
	public void setEmpID(int EmpID) {
	}
	}
	//
	Output:
	Employee's name: Robert
	Employee's age: 33
	Employee's ID: 1253	

	Unit-3 Inheritance and Abstraction.(But Abstraction we have covered mostly in Unit-2) Refer PPT-Chapter-4	
1	Explain types Inheritance in detail	7
2	Explain Super keyword in detail	5
3	Explain Method overriding in detail	5
4	How to Stop Inheritance in java using final keyword/method	5
5	Explain Instance of operator in detail.	5
6	Class interface relationship	1
7	Explain Interface with Dynamic method Dispatch in detail.	5
8	Explain Object class in Java	5
9	Difference between Abstract class Vs Interface	5
10	Why Java Doesn't support multiple Inheritance? What we use instead of it	7
11	Difference between Method overloading Vs method Overriding.	5
12	Interface Creation and Implementation Interfaces, Interface inheritance.	7
	Unit-4 Exception handling, IO Programming.(Refer PPT-Chapter-5 and Chapter-6)	
	Chapter-5	
1	What is Exception? Exceptions and errors, types of exception.	7
2	Exception handling using try and catch block.	5
3	Difference between throw throws and finally.	5
4	Custom Exception.	5
5	Nested Try catch.	5
6	types of exception	5

Atmiya University

	Chapter-6	
1	Types of Streams in Java, byte stream, character stream.	5
2	Explain FileInputStream, FileOutputStream class in detail with example	7
3	Explain FileReader, FileWriter class in detail with example	7
4	Explain BufferedReader, BufferedWriter class in detail with example	7
5	Explain File class' methods in detail with example	7
6	Explain OutputStreamWriter & InputStreamReader	5
	Unit-5 Thread (Refer PPT Chaper-7)	
1	Explain two ways to create threads.	7
2	Explain Life Cycle of threads	7
3	Explain Thread Priority in detail.	7
5	Explain Thread Synchronization in thread	7
6	What is the use of sleep(), suspend() and wait() method.	5
7	What is difference between Process and Thread?	1
	Miscellaneous	
1	Explain Package in detail	7
2	Explain all the OOPS concepts in detail(main 4 concepts of oops- Abstraction, encapsulation, inheritance, and polymorphism) refers extra ppt given by me	7

Atmiya University

Department Of Information Technology

Sem-V-Software Engineering 21BTITCC501

Question Bank

Unit-

1. What is software?
2. What is software engineering?
3. Explain Software Engineering As A Layered Technology.
4. Explain Software Engineering As A Layered Architecture.
5. Explain The Characteristics Of Good Software.
6. Explain Software Development Life Cycle.
7. Explain Software Development Process.
8. Explain stages of SDLC.
9. List out the various models of software development.
10. Explain Waterfall Model.
11. Advantages of waterfall model.
12. Disadvantages if waterfall model.
13. Explain Iterative Waterfall Model.
14. Advantages of Iterative Waterfall Model.
15. Disadvantages of Iterative Waterfall Model.

Unit-

16. Explain Incremental model.
17. Advantages of Incremental model.
18. Disadvantages of Incremental model.
19. When we use the Incremental Model?
20. Explain RAD Model.
21. Advantages of RAD Model.
22. Disadvantages of RAD Model.

Atmiya University

23. Explain Spiral Model.
24. Advantages of Spiral Model.
25. Disadvantages of Spiral Model.
26. When to use Spiral Model?
27. Explain Prototype Model.
28. Advantages of Prototype Model.
29. Disadvantages of Prototype Model.
30. Difference between Hardware & Software.

Unit-□

31. What is hardware?
32. Explain What Is Risk?
33. Explain types of Risk.
34. Explain Risk Management.
35. Explain Project Planning.
36. Explain Project Size Estimation.
37. Explain LOC.
38. Explain FP.
39. Explain Project Scheduling.
40. Advantages of Project Scheduling.
41. Explain Work Breakdown Structure (WBS).
42. Advantages of WBS.
43. List out the Symbols of Usecase Diagram.
44. List out the Symbols of Data Flow (DFD) Diagram.
45. List out the symbols of activity diagram.

Unit-□

46. List out the symbols of Er diagram.
47. What is validation?
48. What is verification?
49. What is software testing?
50. Explain types of testing?
51. Give the difference between white box testing vs black box testing.

Atmiya University

52. What is cohesion?
53. What is coupling?
54. Write a short note on code review process.
55. Explain the term, software maintenance.
56. Roles and responsibility of software project manager.
57. Explain skills of software project manager.
58. Explain code review techniques.
59. Explain component based development.
60. Explain types of requirement.

Unit-

61. What is feasibility?
62. Explain types of feasibility.
63. Explain design concept.
64. Explain taxonomy of architectural design or style.
65. Explain types of designing in software engineering.
66. Explain characteristics of good srs.
67. Explain client server architecture.
68. Draw use case diagram for school management system.
69. Draw use case diagram for hospital management system.
70. Draw DFD diagram for school management system.
71. Draw DFD diagram for hospital management system.
72. Draw Activity diagram for school management system.
73. Draw Activity diagram for hospital management system.
74. Draw ER diagram for school management system.
75. Draw ER diagram for hospital management system

Atmiya University

ATMIYA UNIVERSITY
FACULTY OF ENGINEERING & TECHNOLOGY
DEPARTMENT OF MECHANICAL ENGINEERING
THEORY OF MACHINES
QUESTION BANK

Unit – 1 Introduction to Mechanisms

1) Explain types of constrained motions.
2) Define: (1) Sliding Pair (2) Turning Pair (3) Rolling Pair (4) Screw Pair (5) Spherical Pair (6) Lower Pair (7) Higher Pair (8) Mechanism
3) What is four bar chain mechanism?
4) List inversion of four bar chain mechanism and explain any one of them with neat sketch.
5) What is single slider crank mechanism?
6) List inversion of single slider crank mechanism and explain any one of them with neat sketch.
7) What is double slider crank mechanism?
8) List inversion of double slider crank mechanism and explain any one of them with neat sketch.
9) Define the following terms:
   1. Link 2. Kinematic pair 3. Kinematic chain 4. Mechanism 5. Machine 6. Degree of Freedom
10) Define the following terms:
    1. Kinematics 2. Dynamics 3. Kinetics 4. Statics
11) Explain the types of constrained motion.
12) Explain different kinds of kinematic pairs giving example for each one of them.
13) Explain Kutzbach criterion for the movability of a mechanism having plane motion.
14) What is the significance of degrees of freedom of a kinematic chain when it functions as a mechanism? Give examples.
15) Sketch and describe the four bar chain mechanism. Why it is considered to be the basic chain? Sketch and explain the various inversions of a single slider crank chain.
16) What is inversion of mechanism? Sketch and explain any two inversions of a double slider crank chain.
17) Sketch and explain the various inversions of a single slider crank chain.

Unit – 2 Velocity and Acceleration Analysis

1) In a pin jointed four bar mechanism, as shown in Fig., AB = 300 mm, BC = CD = 360 mm, and AD = 600 mm. The angle BAD = 60°. The crank AB rotates uniformly at 100 r.p.m. Locate all the instantaneous centres and find the angular velocity of the link BC.

Atmiya University

ATMIYA UNIVERSITY
FACULTY OF ENGINEERING & TECHNOLOGY
DEPARTMENT OF MECHANICAL ENGINEERING
THEORY OF MACHINES
QUESTION BANK

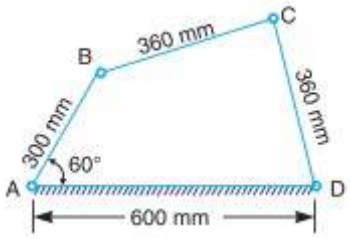

2) Locate all the instantaneous centres of the slider crank mechanism as shown in Fig.. The lengths of crank OB and connecting rod AB are 100 mm and 400 mm respectively. If the crank rotates clockwise with an angular velocity of 10 rad/s, find: 1. Velocity of the slider A, and 2. Angular velocity of the connecting rod AB.

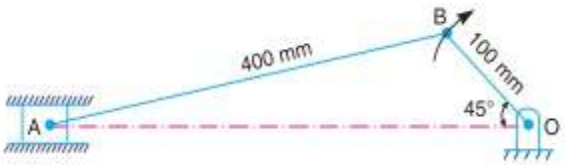

3) The crank of a slider crank mechanism rotates clockwise at a constant speed of 300 r.p.m. The crank is 150 mm and the connecting rod is 600 mm long. Determine : 1. Linear velocity and acceleration of the connecting rod, and 2. angular velocity and angular acceleration of the connecting rod, at a crank angle of 45° from inner dead centre position.
4) PQRS is a four bar chain with link PS fixed. The lengths of the links are PQ = 62.5 mm ; QR = 175 mm ; RS = 112.5 mm ; and PS = 200 mm. The crank PQ rotates at 10 rad/s clockwise. Draw the velocity and acceleration diagram when angle QPS = 60° and Q and R lie on the same side of PS. Find the angular velocity and angular acceleration of links QR and RS.
5) Locate all the instantaneous centres for a four bar mechanism as shown in Fig. The lengths of various links are : AD = 125 mm ; AB = 62.5 mm ; BC = CD = 75 mm. If the link AB rotates at a uniform speed of 10 r.p.m. in the clockwise direction, find the angular velocity of the links BC and CD

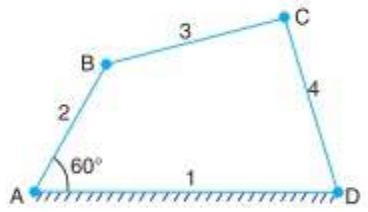

6) In a slider crank mechanism, the length of crank OB and connecting rod AB are 125 mm and 500 mm respectively. The centre of gravity G of the connecting rod is 275 mm from the slider A. The crank speed is 600 r.p.m. clockwise. When the crank has turned 45°

Atmiya University

from the inner dead centre position, determine: 1. velocity of the slider A, 2. velocity of the point G, and 3. angular velocity of the connecting rod AB.

7) The engine mechanism shown in Fig. 8.38 has crank OB = 50 mm and length of connecting rod AB = 225 mm. The centre of gravity of the rod is at G which is 75 mm from B. The engine speed is 200 r.p.m. For the position shown, in which OB is turned 45° from OA, Find 1. the velocity of G and the angular velocity of AB, and 2. the acceleration of G and angular acceleration of AB.

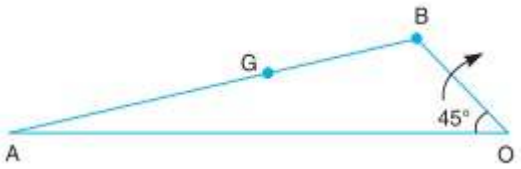

8) In a pin jointed four bar mechanism ABCD, the lengths of various links are as follows: [Ans. 6.3 m/s ; 22.6 rad/s ; 750 m/s AB = 25 mm ; BC = 87.5 mm ; CD = 50 mm and AD = 80 mm. The link AD is fixed and the angle BAD = 135°. If the velocity of B is 1.8 m/s in the clockwise direction, find 1. velocity and acceleration of the mid point of BC, and 2. angular velocity and angular acceleration of link CB and CD.
9) In a four bar chain ABCD , link AD is fixed and the crank AB rotates at 10 radians per second clockwise. Lengths of the links are AB = 60 mm ; BC = CD = 70 mm ; DA = 120 mm. When angle DAB = 60° and both B and C lie on the same side of AD, find 1. angular velocities (magnitude and direction) of BC and CD ; and 2. angular acceleration of BC and CD.
10) Explain the positions of velocity, tangential and radial acceleration components

Unit – 3 Cam and Gyroscope

1) An aeroplane makes a complete half circle of 50 metres radius, towards left, when flying at 200 km per hr. The rotary engine and the propeller of the plane has a mass of 400 kg and a radius of gyration of 0.3 m. The engine rotates at 2400 r.p.m. clockwise when viewed from the rear. Find the gyroscopic couple on the aircraft and state its effect on it.
2) The turbine rotor of a ship has a mass of 8 tonnes and a radius of gyration 0.6 m. It rotates at 1800 r.p.m. clockwise, when looking from the stern. Determine the gyroscopic couple, if the ship travels at 100 km/hr and steer to the left in a curve of 75 m radius.
3) The heavy turbine rotor of a sea vessel rotates at 1500 r.p.m. clockwise looking from the stern, its mass being 750 kg. The vessel pitches with an angular velocity of 1 rad/s. Determine the gyroscopic couple transmitted to the hull when bow is rising, if the radius of gyration for the rotor is 250 mm. Also show in what direction the couple acts on the hull?

Atmiya University

ATMIYA UNIVERSITY
FACULTY OF ENGINEERING & TECHNOLOGY
DEPARTMENT OF MECHANICAL ENGINEERING
THEORY OF MACHINES
QUESTION BANK

4) The turbine rotor of a ship has a mass of 3500 kg. It has a radius of gyration of 0.45 m and a speed of 3000 r.p.m. clockwise when looking from stern. Determine the gyroscopic couple and its effect upon the ship:
   1. when the ship is steering to the left on a curve of 100 m radius at a speed of 36 km/h.
   2. when the ship is pitching in a simple harmonic motion, the bow falling with its maximum velocity. The period of pitching is 40 seconds and the total angular displacement between the two extreme positions of pitching is 12 degrees.
5) The mass of the turbine rotor of a ship is 20 tonnes and has a radius of gyration of 0.60 m. Its speed is 2000 r.p.m. The ship pitches 6° above and 6° below the horizontal position. A complete oscillation takes 30 seconds and the motion is simple harmonic. Determine the following:
   1. Maximum gyroscopic couple,
   2. Maximum angular acceleration of the ship during pitching, and
   3. The direction in which the bow will tend to turn when rising, if the rotation of the rotor is clockwise when looking from the left.
6) A ship propelled by a turbine rotor which has a mass of 5 tonnes and a speed of 2100 r.p.m. The rotor has a radius of gyration of 0.5 m and rotates in a clockwise direction when viewed from the stern. Find the gyroscopic effects in the following conditions:
   1. The ship sails at a speed of 30 km/h and steers to the left in a curve having 60 m radius.
   2. The ship pitches 6 degree above and 6 degree below the horizontal position. The bow is descending with its maximum velocity. The motion due to pitching is simple harmonic and the periodic time is 20 seconds.
   3. The ship rolls and at a certain instant it has an angular velocity of 0.03 rad/s clockwise when viewed from stern.
   Explain how the direction of motion due to gyroscopic effect is determined in each case.
7) What is gyroscope. List the applications of gyroscope.
8) Show that for precessional angular motion the total angular acceleration of the disc is given by $d\omega/dt + I\omega\omega_p$
9) Explain in brief gyroscopic couple and show that $C = I\omega\omega_p$
10) Explain gyroscopic effect of an aeroplane
11) Explain gyroscopic effect of naval ship
12) Explain gyroscopic effect of two and four wheeler vehicle
13) A cam is to give the following motion to a knife-edged follower : 1. Outstroke during 60° of cam rotation ; 2. Dwell for the next 30° of cam rotation ; 3. Return stroke during next 60° of cam rotation, and 4. Dwell for the remaining 210° of cam rotation. The stroke of the follower is 40 mm and the minimum radius of the cam is 50 mm. The follower

Atmiya University

moves with uniform velocity during both the outstroke and return strokes. Draw the profile of the cam when (a) the axis of the follower passes through the axis of the cam shaft, and (b) the axis of the follower is offset by 20 mm from the axis of the cam shaft.

14) A cam is to be designed for a knife edge follower with the following data : 1. Cam lift = 40 mm during 90° of cam rotation with simple harmonic motion. 2. Dwell for the next 30°. 3. During the next 60° of cam rotation, the follower returns to its original position with simple harmonic motion. 4. Dwell during the remaining 180°. Draw the profile of the cam when (a) the line of stroke of the follower passes through the axis of the cam shaft, and (b) the line of stroke is offset 20 mm from the axis of the cam shaft. The radius of the base circle of the cam is 40 mm. Determine the maximum velocity and acceleration of the follower during its ascent and descent, if the cam rotates at 240 r.p.m.
15) Give classification of cam and explain any one
16) Give classification of follower and explain any one
17) Explain various displacement diagrams used for cam profile
18) Explain terminologies associated with cam profile

Unit – 4 Flywheel and Governor

1) Define Flywheel and Classify it. Also explain that how does it differ from Governor.
2) Draw and explain the turning moment diagram for : a) Single Cylinder Double acting steam engine b) 4-Stroke I.C. Engine.
3) Define the following : a) Maximum fluctuation of energy b) Coefficient of fluctuation of energy c) Coefficient of fluctuation of speed
4) Derive an equation of energy stored in flywheel
5) The turning moment diagram for a petrol engine is drawn to the following scales : Turning moment, 1 mm = 5 N-m ; crank angle, 1 mm = 1°. The turning moment diagram repeats itself at every half revolution of the engine and the areas above and below the mean turning moment line taken in order are 295, 685, 40, 340, 960, 270 mm2. The rotating parts are equivalent to a mass of 36 kg at a radius of gyration of 150 mm. Determine the coefficient of fluctuation of speed when the engine runs at 1800 r.p.m.
6) The turning moment diagram for a multicylinder engine has been drawn to a scale 1 mm = 600 N-m vertically and 1 mm = 3° horizontally. The intercepted areas between the output torque curve and the mean resistance line, taken in order from one end, are as follows : + 52, – 124, + 92, – 140, + 85, – 72 and + 107 mm2, when the engine is running at a speed of 600 r.p.m. If the total fluctuation of speed is not to exceed ± 1.5% of the mean, find the necessary mass of the flywheel of radius 0.5 m.

Atmiya University

ATMIYA UNIVERSITY
FACULTY OF ENGINEERING & TECHNOLOGY
DEPARTMENT OF MECHANICAL ENGINEERING
THEORY OF MACHINES
QUESTION BANK

7) Give classification of governor
8) Explain function of governor
9) Derive an equation of height of governor for watt governor
10) Derive an equation of height of governor for Porter governor
11) Explain the terms relating to governor. Sensitiveness, Hunting, Stability and Isochronous.
12) Write equation for a) effort and power of Porter Governor b) co-efficient of insensitiveness for
13) A Porter governor has equal arms each 250 mm long and pivoted on the axis of rotation. Each ball has a mass of 5 kg and the mass of the central load on the sleeve is 25 kg. The radius of rotation of the ball is 150 mm when the governor begins to lift and 200 mm when the governor is at maximum speed. Find the minimum and maximum speeds and range of speed of the governor.
14) The arms of a Porter governor are each 250 mm long and pivoted on the governor axis. The mass of each ball is 5 kg and the mass of the central sleeve is 30 kg. The radius of rotation of the balls is 150 mm when the sleeve begins to rise and reaches a value of 200 mm for maximum speed. Determine the speed range of the governor. If the friction at the sleeve is equivalent of 20 N of load at the sleeve, determine how the speed range is modified.
15) The upper arms of a Porter governor have lengths 350 mm and are pivoted on the axis of rotation. The lower arms have lengths 300 mm and are attached to the sleeve at a distance of 40 mm from the axis. Each ball has a mass of 4 kg and mass on the sleeve is 45 kg. Determine the equilibrium speed for a radius of rotation of 200 mm and find also the effort and power of the governor for 1 per cent speed change.
16) A Hartnell governor having a central sleeve spring and two right-angled bell crank levers moves between 290 r.p.m. and 310 r.p.m. for a sleeve lift of 15 mm. The sleeve arms and the ball arms are 80 mm and 120 mm respectively. The levers are pivoted at 120 mm from the governor axis and mass of each ball is 2.5 kg. The ball arms are parallel to the governor axis at the lowest equilibrium speed. Determine: (1) Loads on the spring at the lowest and the highest equilibrium speeds, and (2) Stiffness of the spring.

Unit – 5 Power Transmission Elements

1) Give classification of gears
2) Explain gear terminologies
3) Give classification of gear train and explain any one of them with neat sketch.

ATMIYA UNIVERSITY
FACULTY OF ENGINEERING & TECHNOLOGY
DEPARTMENT OF MECHANICAL ENGINEERING
THEORY OF MACHINES
QUESTION BANK

4) An epicyclic gear consists of three gears A, B and C as shown in Fig. The gear A has 72 internal teeth and gear C has 32 external teeth. The gear B meshes with both Aand C and is carried on an arm EF which rotates about the centre of A at 18 r.p.m.. If the gear A is fixed, determine the speed of gears B and C.

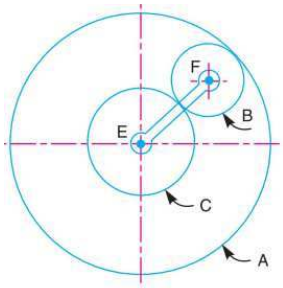

5) An epicyclic train of gears is arranged as shown in Fig. How many revolutions does the arm, to which the pinions B and C are attached, make:
    1. when A makes one revolution clockwise and D makes half a revolution anticlockwise, and
    2. when A makes one revolution clockwise and D is stationary ?

The number of teeth on the gears A and D are 40 and 90 respectively.

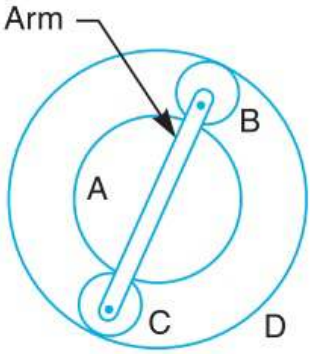

6) Give classification of brakes
7) Explain band and block brake with neat sketch
8) Explain shoe brake with neat sketch
9) Explain internal expanding brake with neat sketch
10) Give classification of friction clutch
11) Explain single plate clutch with neat sketch
12) Explain multi plate clutch with neat sketch
13) Explain cone clutch with neat sketch
14) Explain centrifugal clutch with neat sketch
15) Explain torque transmission capacity by considerations for uniform wear and uniform pressure theory.

Atmiya University

Web Programming (21BTCECC404)

Question Bank – 1 Marks Questions

Sr. No.	Unit	Questions	Marks
1	1	What are JavaScript Cookies?	1
2	1	List out all the methods to declare a variable in JavaScript.	1
3	1	What would be the result of □ □ □ □ ”11”□ 2	1
4	2	Describe Error handling in JavaScript.	1
□	2	What is the isNAN() function in JavaScript?	1
□	2	How can you integrate HTML with AngularJS?	1
□	2	Define AngularJS	1
□	3	Give full form of PHP.	1
□	3	State True or False: PHP Variables are case sensitive.	1
10	3	PHP Variable name should start with which special character?	1
11	4	How many types of Arrays are there in PHP.	1
12	4	How we can write multiline comment in PHP?	1
13	4	Which operator is used for Concatenation in PHP?	1
14	□	State True or False: Numeric Array will have their index as a String.	1
1□	□	Define CRUD Operation.	1

Atmiya University Rajkot

1		Write syntax to create DB connection.	1

Question Bank – 4 & Marks Questions

Sr. No.	Unit	Questions	Marks
1	1	Write a JavaScript code to find first 10 prime numbers.	4
2	1	Explain pop-up boxes in JavaScript with example.	4
3	1	Explain event handling in JavaScript with proper example.	4
4	1	Explain scope of variable with the help of example in JavaScript also explain arrays with syntax.	4
	1	Explain scope of variable with the help of example in JavaScript also explain arrays with syntax.	
	1	Why is JavaScript called client-side scripting language? Explain advantages of JavaScript.	
	1	Design HTML form which includes two field username and password. Write JavaScript code to show and hide password.	
	2	Define AngularJS and what are the key features of it?	4
	2	What is Model-View-Controller in AngularJS?	
10	2	Enlist the inbuilt object of JavaScript. Explain any one in detail.	
11	2	Write a syntax to send sample HTTP POST request in AngualrJS?	4
12	2	What do the services represent in AngularJS? What are directives?	4

Atmiya University Rajkot

13	2	How can you integrate AngularJS with HTML?	
14	2	What is Model-View-Controller in AngularJS?	
1	3	Give the difference between Client side Scripting and Server Side Scripting.	4
1	3	Differentiate between GET and POST method	4
1	3	What is the role of Cookies in Web Browser?	4
1	4	What is PHP? How can you connect to database in PHP? Show the simple database operation using PHP with proper example.	
1	4	Write PHP script to make sum of first 10 even numbers.	4
20		Write a PHP script to open, close, read and write into a file	
21	3	What are the different types of arrays in PHP? Explain with example to process the arrays in PHP.	
22	3	Explain features of PHP? Discuss various types of control statements in PHP.	4
23	4	Explain session in PHP with proper example.	4
24	3	What is an associative array in PHP? Give Example	4
2		Explain the concept of Type Conversion in PHP, with example.	
2		Write a PHP program to store user registration (user-name, address, Date of Birth, age, pan card, gender) with mysql database.	
2		Write a php program to greet the user based on time.	4

Atmiya University Rajkot

ATMIYA UNIVERSITY, RAJKOT
Computer Engineering Department

B.Tech. SEM.-V
Subject: Analysis & Design of Algorithm(18BTCECC501)
Question Bank

1. Define Activity Selection Problem. Explain how it can be solved using Greedy method.
2. Solve the following Fractional Knapsack Problem using Greedy Algorithm. There are five items whose weights and values are given in following arrays. Weight w [] = {1,2,5,6,7} Value v [] = {1, 6, 18, 22, 28} Show your equation and find out the optimal knapsack items for weight capacity of 11 units.
3. Using greedy algorithm find an optimal schedule for following jobs with n=7. profits: (P1, P2, P3, P4, P5, P6, P7) = (4, 6, 19, 23, 8, 3, 40) and deadline (d1, d2, d3, d4, d5, d6, d7) = (2, 4, 4, 5, 2, 3, 2)
4. Find MST for the given graph using Prim's algorithm.

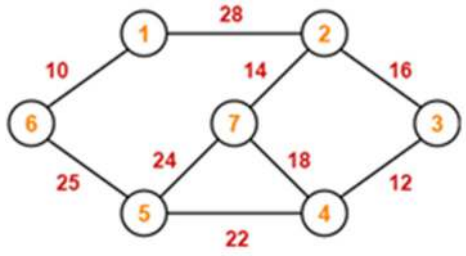

5. Find MST for given graph using Krushkal's algorithm.

Atmiya University

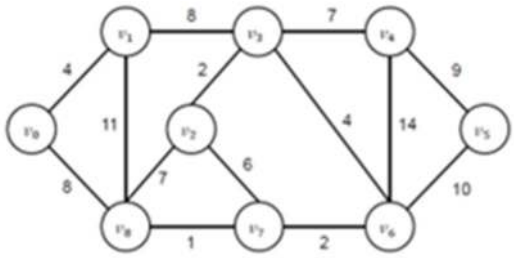

6. Determine LCS of {abaababababb} and {abaa}.
7. Explain 0/1 knapsack using suitable example.
8. Define Making Change Problem. Explain how it can be solved using Dynamic Programming.
9. Using dynamic programming find out the optimal sequence for the matrix chain multiplication of A_{4x10}, B_{10x3}, C_{3x12}, D_{12x20} matrices.
10. Explain All Pair Shortest Path with example.
11. Define 4 Queen's Problem. Explain how it can be solved using Backtracking.
12. Explain how to solve knapsack problem using backtracking.
13. Write and explain Travelling Salesman problem with example.
14. Show the comparisons with Rabin-Karp string matcher makes for the pattern P=0001 in the text T=000010001010001
15. Show the comparisons that KMP string matcher makes for the pattern P=abaa in the text T=ababbaabaabbbabaa
16. Define P, NP, NP-Hard and NP-Complete Problems.

Atmiya University

ATMIYA UNIVERSITY

Faculty of Engineering and Technology

Department of Electrical Engineering

UG Semester – IV

Subject Code: - 21BTEECC404

Subject Name: - Circuits And Network

Question Bank

1. **Using mesh analyses find the mesh currents *I*1, *I*2 and *I*3. Also find voltage *v* across a dependent source.**

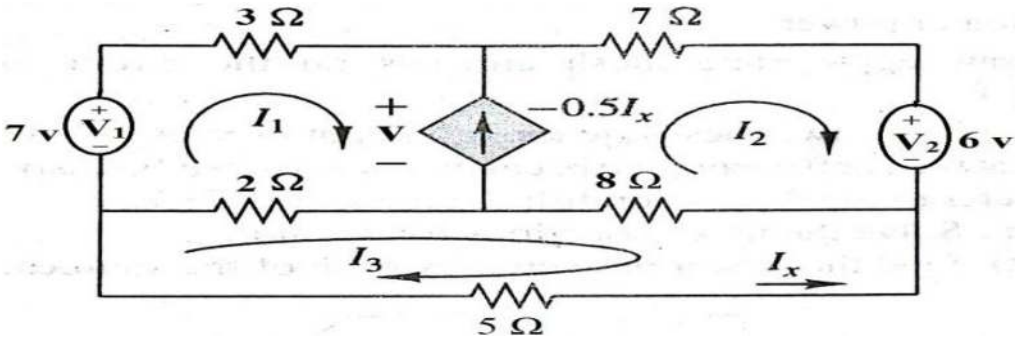

2. **Find the current passing through the 2 Ohm resistor using Mesh analysis for the circuit shown in the following figure.**

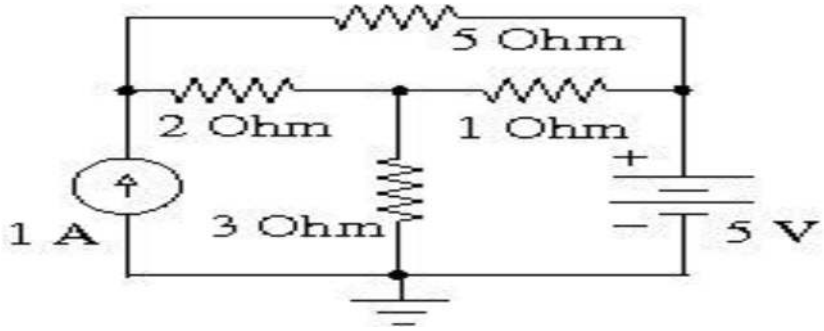

3. **Using mesh analysis determine mesh current i and the value of k which causes i=0if V1=10 v and V2=2 v for the network shown in below figure.**

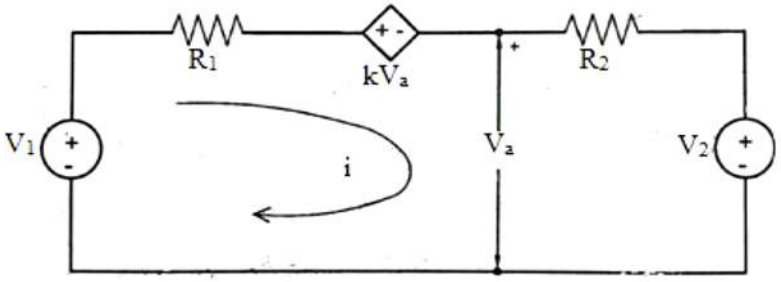

Atmiya University

4. **Find the voltages and currents for all circuit elements using mesh analysis.**

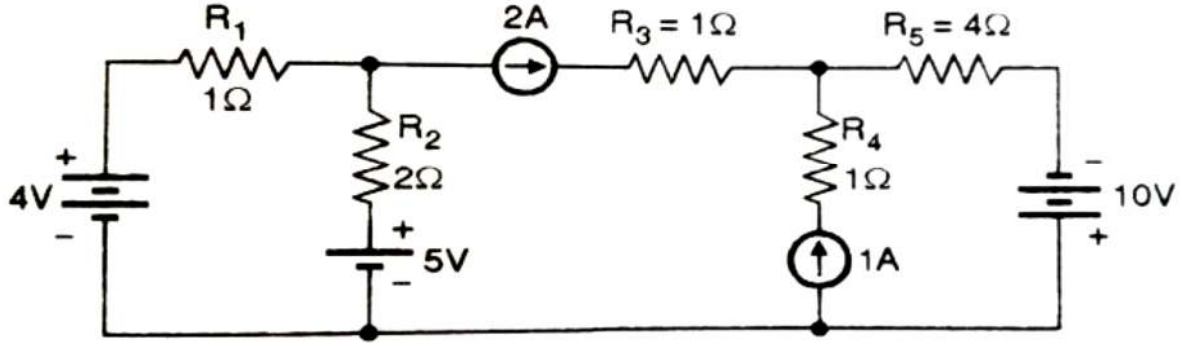

5. **Find the current through the 5V source in below Figure using Node voltage analysis.**

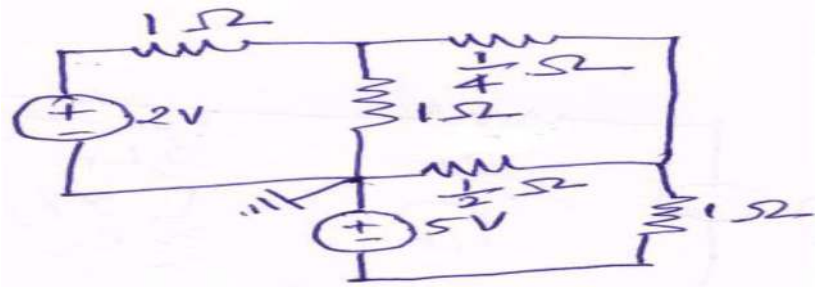

6. **Using nodal analysis find the value of *k* such that V_Y is zero for the network shown in below figure.**

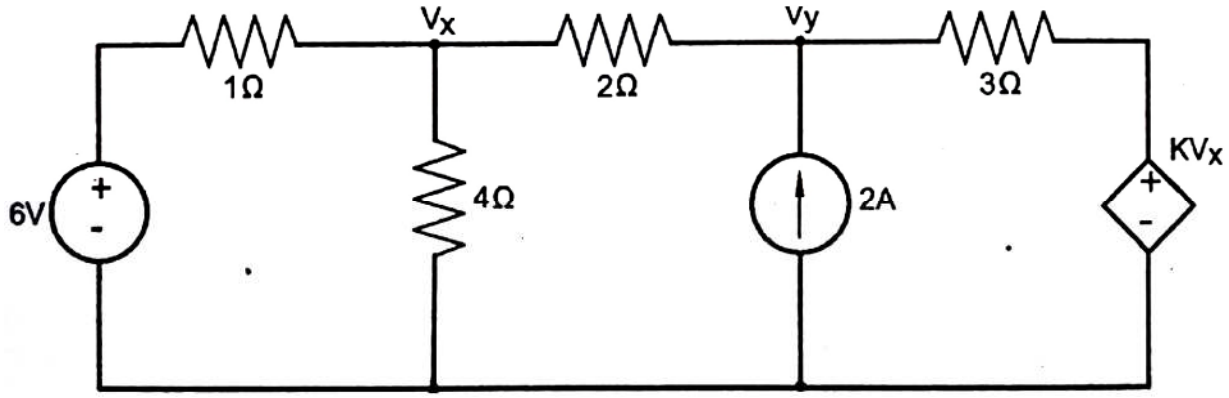

7. **Calculate the node voltages for all the nodes shown in below figure using nodal analysis.**

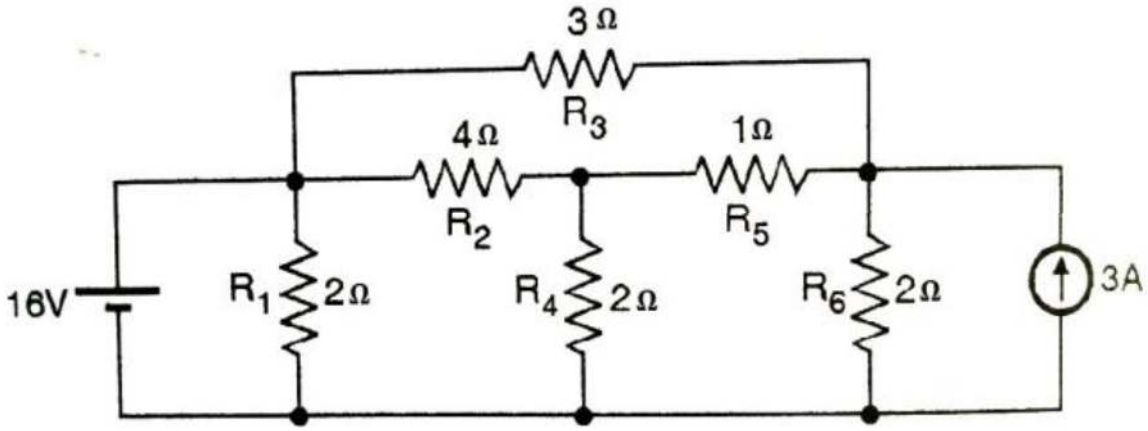

Atmiya University

ATMIYA UNIVERSITY

Faculty of Engineering and Technology

Department of Electrical Engineering

UG Semester – IV

Subject Code: - 21BTEECC404

Subject Name: - Circuits And Network

Question Bank

1. **Define Following Terms:**
   - I. **Linear And Nonlinear Networks**
   - II. **Lumped And Distributed Networks**
   - III. **Passive And Active Networks**
   - IV. **Dependent Source.**
2. **Prove The Maximum Power Transfer Theorem For A Practical Voltage Source. What Is The Source (Vs, Rs)? Maximum Power That Can Be Delivered If Vs=20 V And Rs=1 Ohm?**
3. **State And Explain (I) Reciprocity Theorem (II) Norton's Theorem.**
4. **Explain Substitution Theorem.**
5. **Explain Millman's Theorem.**
6. **State Ad Prove Maximum Power Transfer Theorem For A.C. Circuits. For The Network shown In Fig.1, Find The Value Of R_{AD} For Maximum Power Transfer. Also Find The Maximum Power Transfer.**

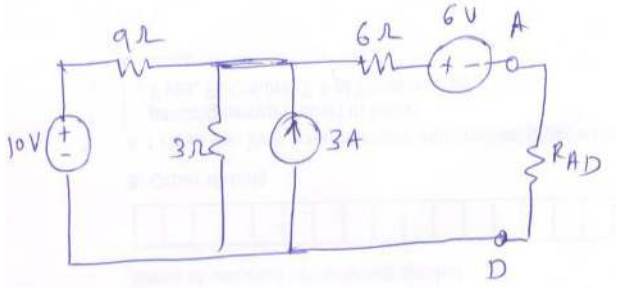

7. **State Thevenin's Theorem. Calculate Current Passing Through 60Ω Resistance In The Circuit Shown In Figure: 6, Using Thevenin's Theorem.**

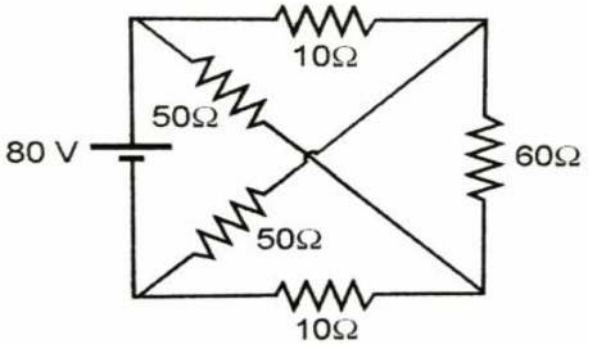

Atmiya University

8. **Find The Current In The 5 Ohm Resistor For The Circuit Shown In Figure Using Norton's Theorem.**

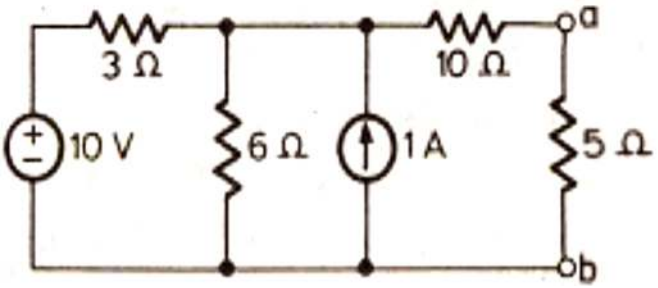

9. **Find Current In 20 Ohm Resistance In The Circuit Shown In Figure: 5 Using Superposition Theorem.**

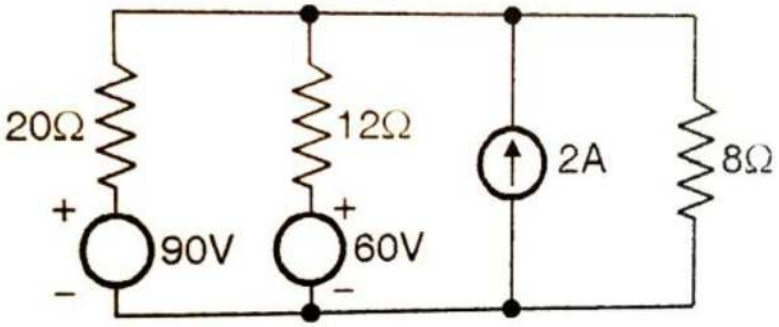

Atmiya University

ATMIYA UNIVERSITY

Faculty of Engineering and Technology

Department of Electrical Engineering

UG Semester – IV

Subject Code: - 21BTEECC404

Subject Name: - Circuits And Network

Question Bank

1. **Explain the "DOT CONVENTION RULE" for The Magnetically Coupled Network**
2. **Show that two magnetically coupled coils connected in parallel can be replaced by a single coil having an inductance of**

$$(1)\ L_{ab} = (L1 * L2 - M^2)/(L1 + L2 - 2 * M)$$

If magnetic polarity of the coil 2 is reversed then

$$(2)\ L_{ab} = (L1 * L2 - M^2)/(L1 + L2 + 2 * M)$$

3. **Explain The Following Terms**

Charge	Electric Current	Electric Potential	Potential Difference
Branch	Node or Junction	Super Node	Mesh or Loop
Super Mesh	Linear Element & Non Linear Element	Unilateral Element & Bi-Lateral Element	Lumped Parameter & Distributed Parameter
Active Element & Passive Element	Time Variant &Time Invariant Element	Effective or RMS Value	Average Value
Peak Value	Frequency& Radian Frequency	Time Period	Instantaneous Value
Phase Angle	Phase Difference		

4. **Explain Ideal and Practical Energy Sources.**
5. **Explain Dependent Energy Sources In Detail.**

6. **Determine The Inductance Between Terminals For The 3 Coils System As Shown in Figure.**

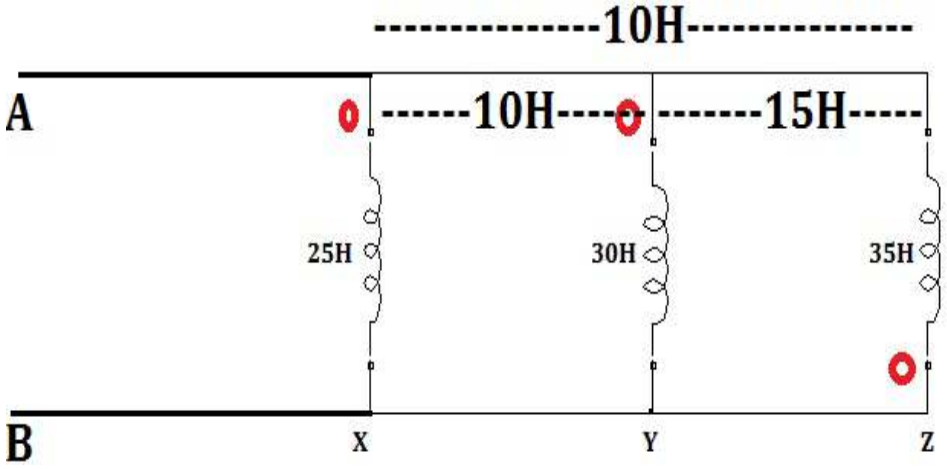

7. **In the Network Using Node Analysis Find V_2 Which Results in Zero Current Through 4Ω Resistor.**

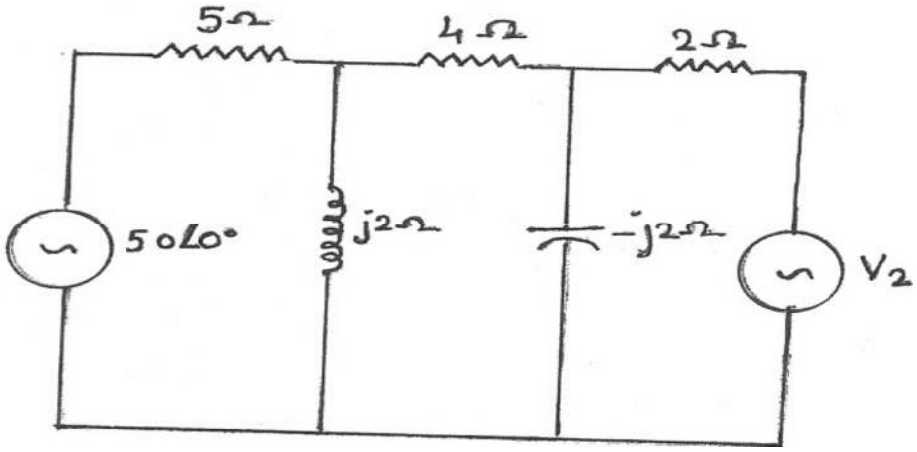

8. **Solve For The Nodal Voltages V1, V2, V3 and V4 as Shown In The Network. Using the Nodal Analysis.**

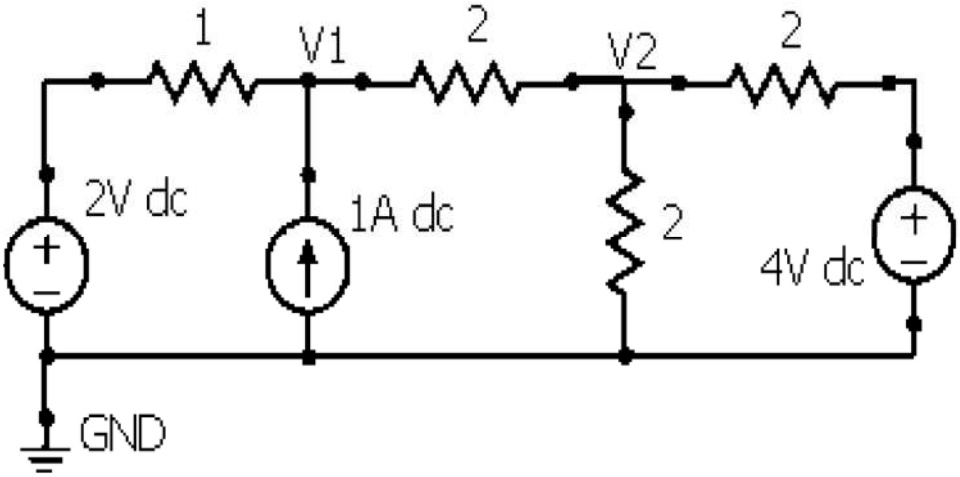

Atmiya University

9. **Using source shifting and source transformation find out the voltage Vx in the figure.**

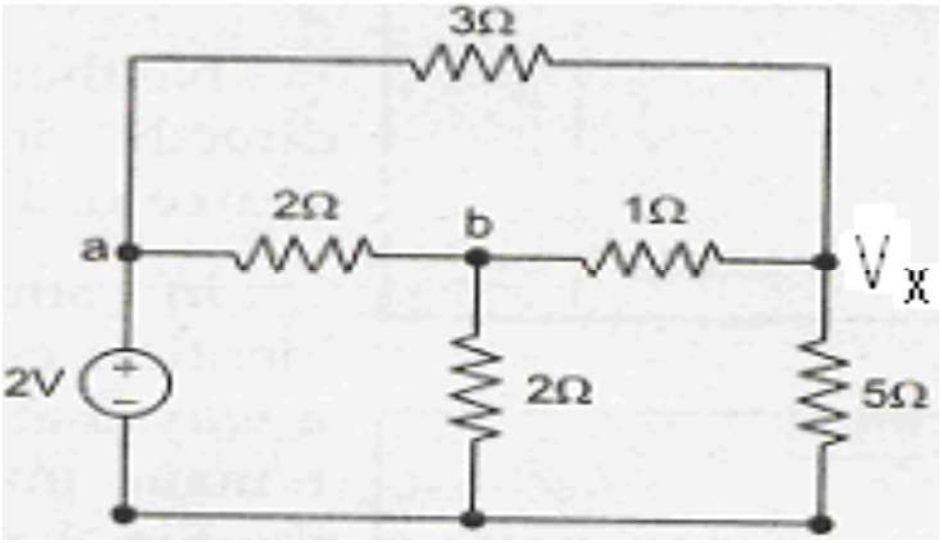

10. **Explain The Rules of Source Transformation Technique. For The Network Shown in Fig. Determine The Numerical Value of Current i_2 By Using Source Transformation Technique.**

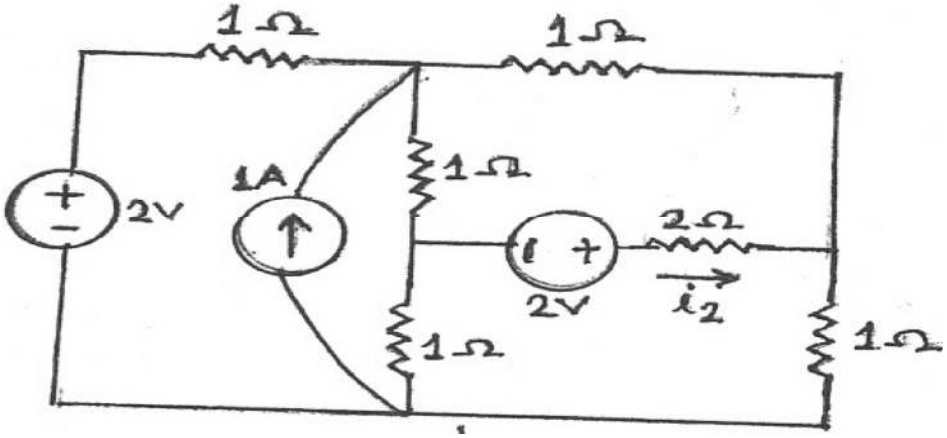

11. **Determine Current Through 4Ω Resistor Branch of The Network shown In Fig.**

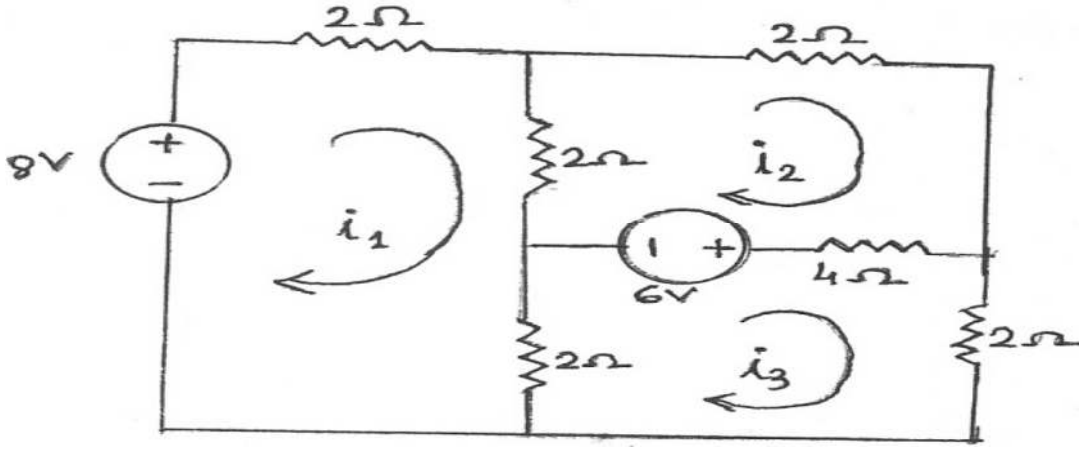

Atmiya University

12. **Determine Loop Current Using Loop Analysis For Below Network.**

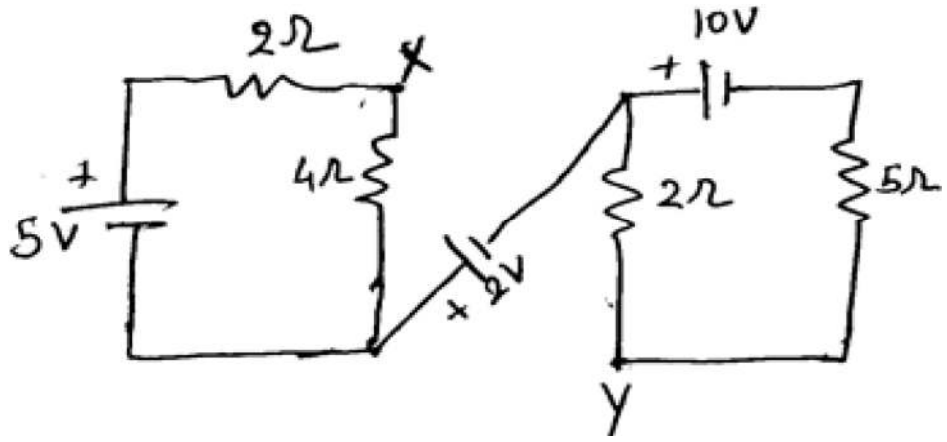

13. **State And Explain Superposition Theorem. Hence Using This Find V_{AB} as Shown in Below Figure.**

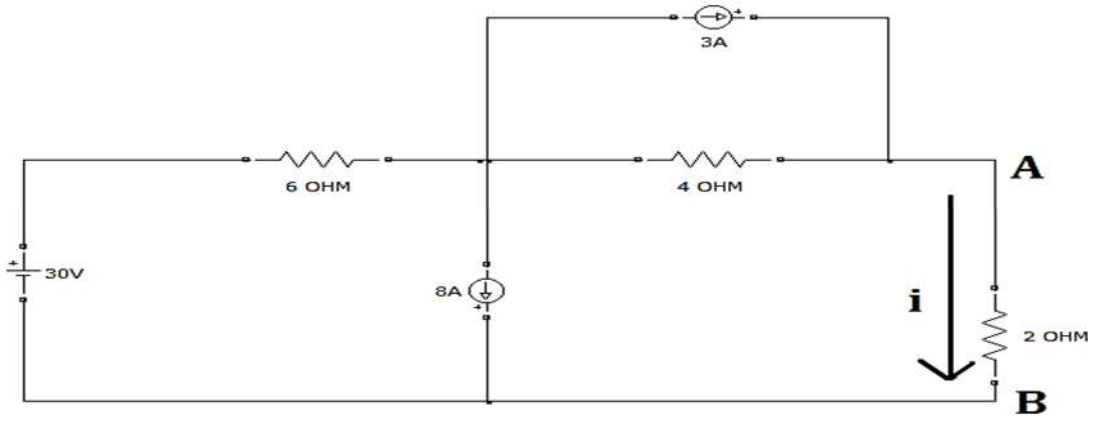

14. **Determine Node Voltages V1, and V2 in The Network by applying The Super Position Theorem.**

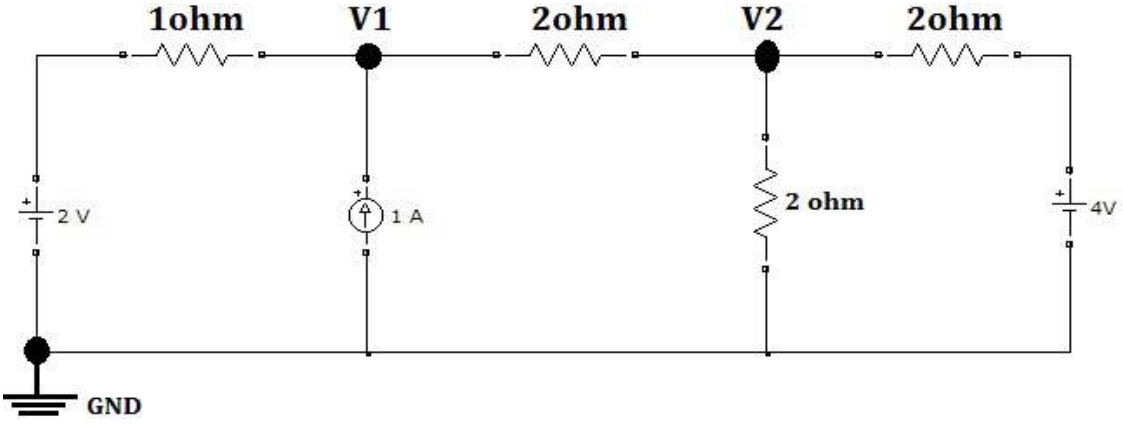

15. **Explain Compensation Theorem.**

16. **State and Explain THEVENIN'S Theorem, with its Proof.**

Atmiya University

17. Apply THEVENIN'S Theorem to Calculate Current Flowing in Branch AB for the Circuit as Shown in Below Figure.

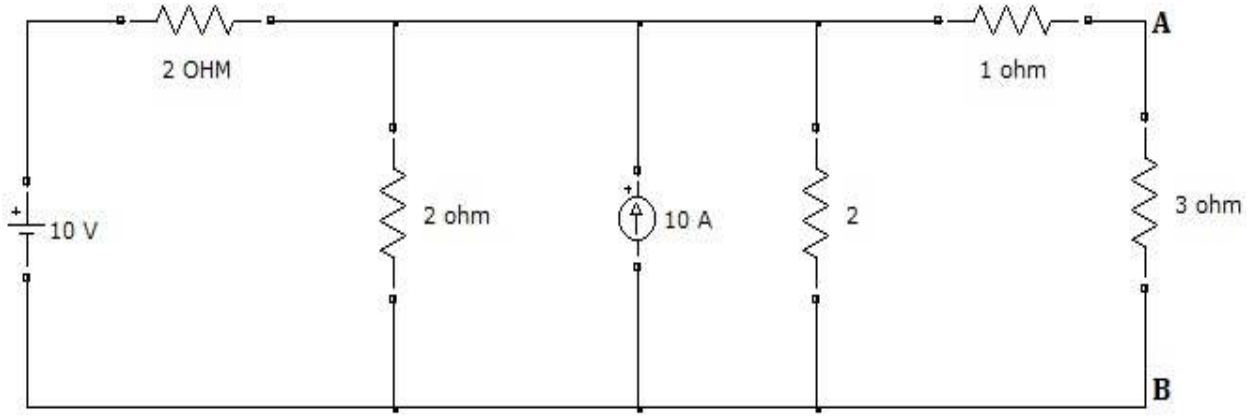

18. Find R_{TH} and V_{TH} For The Network as Shown in Figure

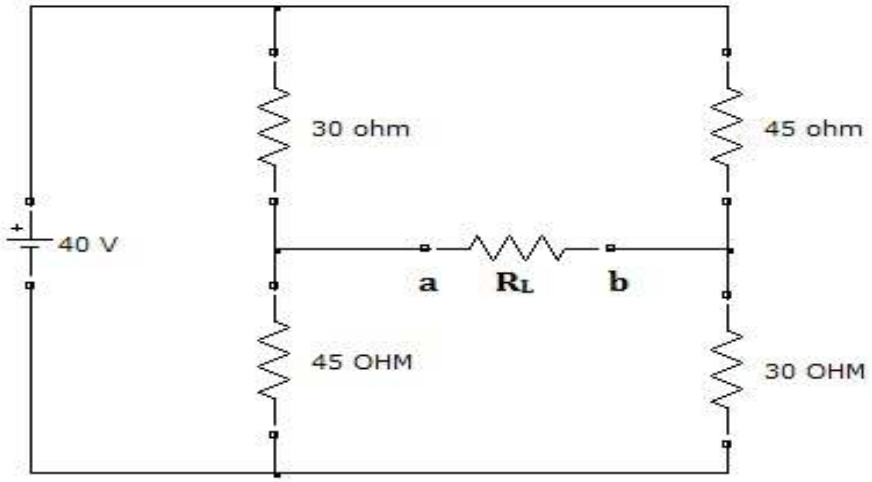

19. Determine the current in 1 ohm resistor of the network as shown in below figure.

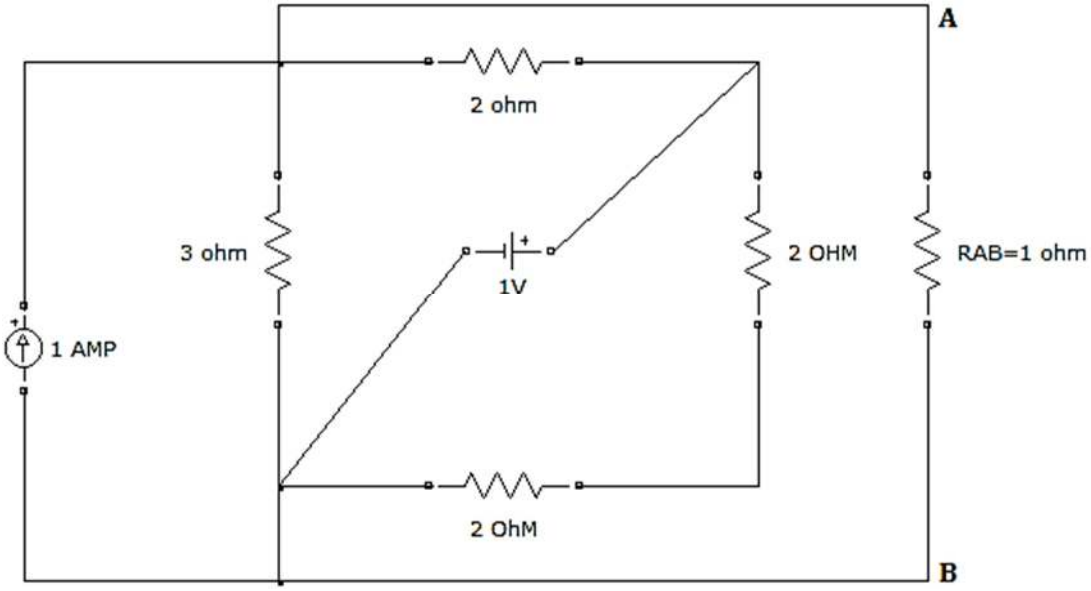

20. State and Explain NORTON'S Theorem, with its Proof.

Atmiya University

21. **Find The Current in The 5 ohm Resistor for the Circuit Shown in Below Figure by Using NORTON's Theorem.**

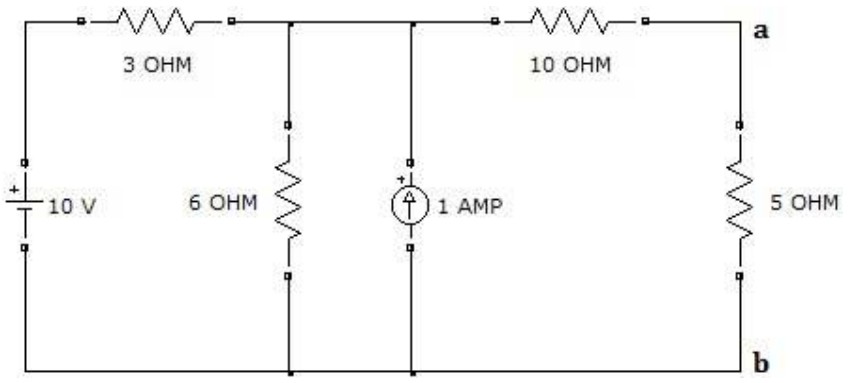

22. **As shown in below figure if 2V Source is replaced by an Open Circuit Then Find THEVENIN'S & NORTON'S Equivalent Circuits across V2 and V3.**

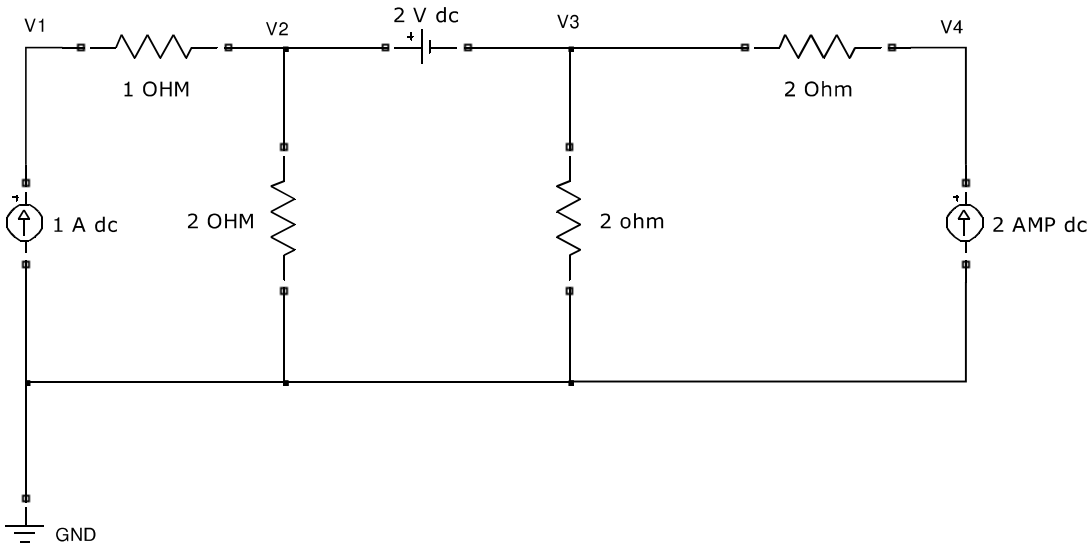

23. **Find The Current in the 6 ohm Resistor as Shown in Below Circuit Using THEVENIN'S Theorem. And Verify Your Result Using NORTON'S Theorem.**

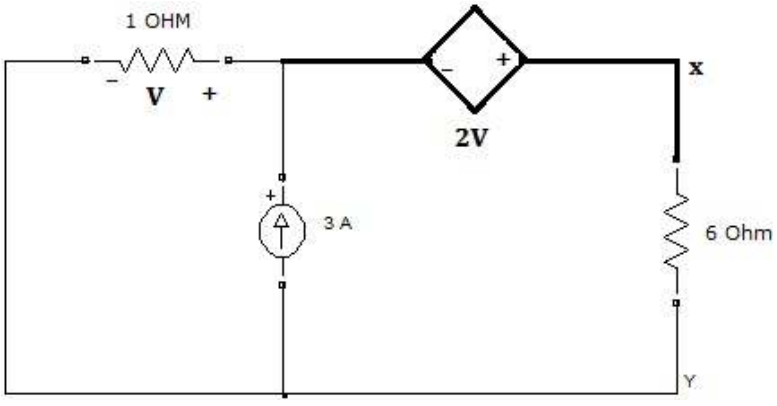

24. **State and Explain Reciprocity Theorem And Compensation Theorem.**

25. **State and Explain the "The Maximum Power Transfer Theorem". Also Derive The Condition For Maximum Power Transfer to The Load for DC and AC Circuit.**

Atmiya University

26. For The network Shown in Fig. Determine The Value of R_L For Maximum Power Transfer. What will be The Value of Power Transfer under This Condition?

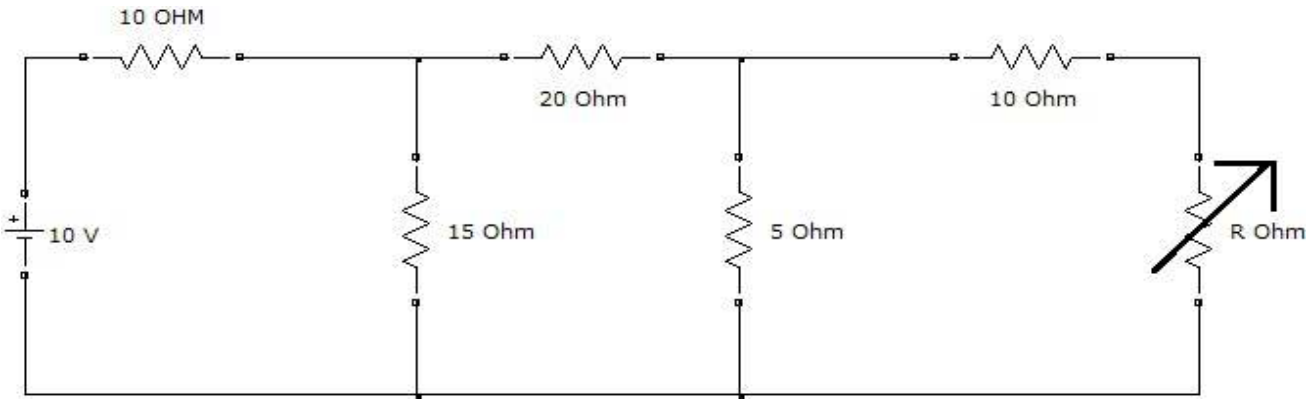

27. Obtain THEVENIN'S Equivalent Circuit for The network shown in Fig. and Find the Power Dissipated in R_L=5ohm resistor. Find R_L for Maximum Power Transfer from the Source and Compute Maximum Power That Can Be Transferred i.e. P_{MAX}.

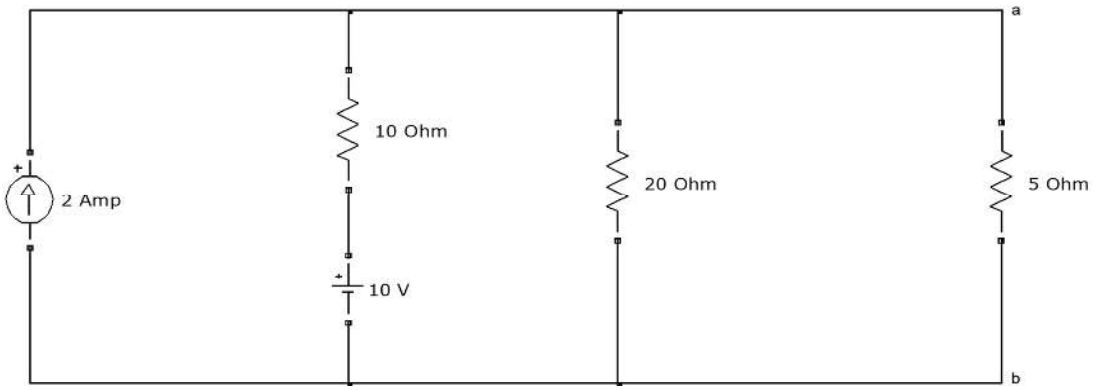

28. For The Circuit Shown, Find the Power Loss in 0.5ohm and 1ohm Resistor. Check Power Balance in the Circuit.

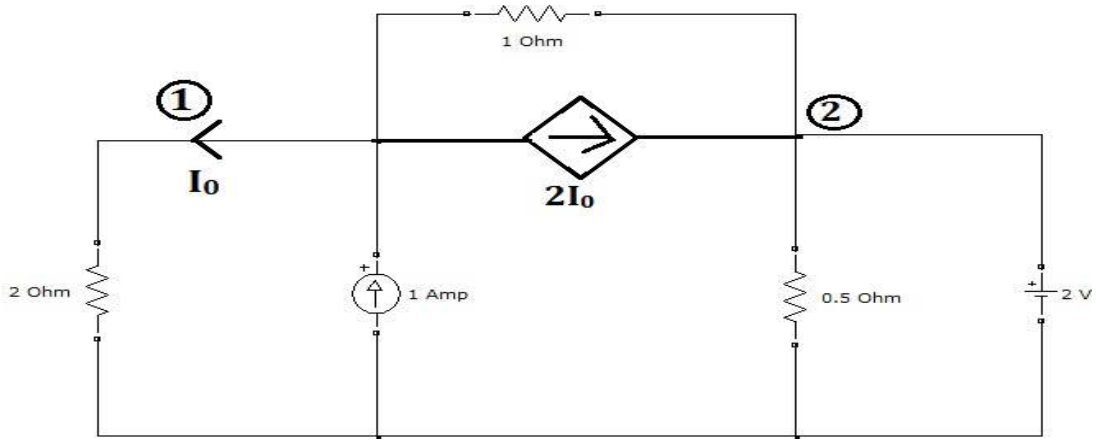

29. Explain the term Duality With respect To a Network.

Atmiya University

30. Draw The Dual of the network as shown in below figure.

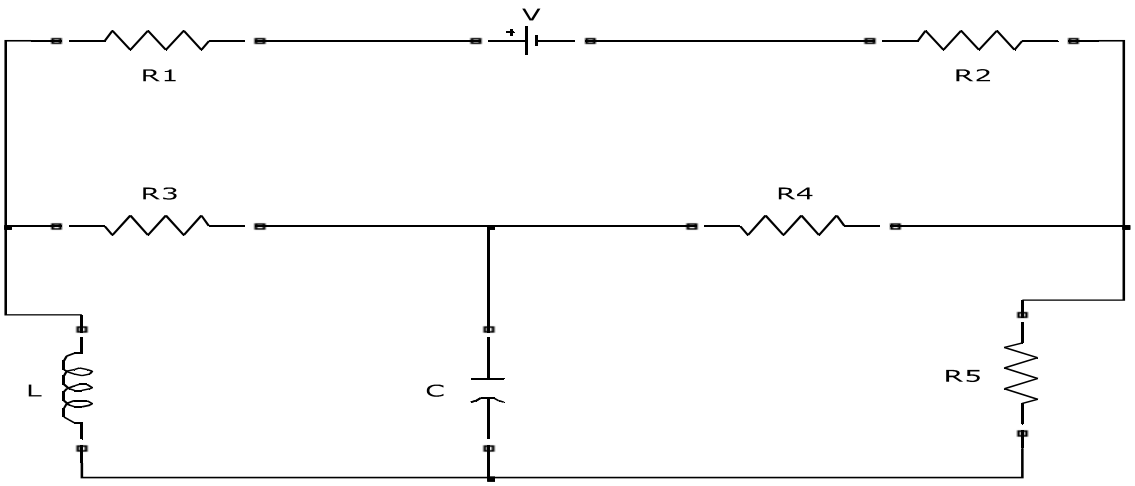

Atmiya University

ATMIYA UNIVERSITY

Faculty of Engineering and Technology

Department of Electrical Engineering

UG Semester – IV

Subject Code: - 21BTEECC402

Subject Name: - Digital Electronics & Microprocessor

Question Bank

1. **Explain The Significance Of Different Number Systems**
2. **Perform The Following Binary Arithmetic Operations:**
   - I. 1101_2+101_2
   - II. 1110_2-10_2
   - III. $101_2\times11_2$
   - IV. $1101_2\div10_2$
3. **Convert The Following Numbers Between Decimal, Binary, Octal, And Hexadecimal:**
   - I. 35_{10} **To Binary**
   - II. 10_{12} **To Decimal**
   - III. 56_8 **To Hexadecimal**
   - IV. $1A_{16}$ **To Octal**
4. **Explain The Concept Of BCD (Binary Coded Decimal) And ASCII Codes.**
5. **Define AND, OR, NOT, NAND, NOR, And XOR Gates. Create Truth Tables For Each Gate.**
6. **Write A Short Note On TTL**
7. **Discuss The Key Differences Between TTL And CMOS Logic Families In Terms Of Power Consumption, Speed, And Noise Margin.**
8. **Write A Short Note On XOR Gate.**

Atmiya University

ATMIYA UNIVERSITY

Faculty of Engineering and Technology

Department of Electrical Engineering

UG Semester – IV

Subject Code: - 21BTEECC402

Subject Name: - Digital Electronics & Microprocessor

Question Bank

1. What Is Boolean Algebra, And How Is It Different From Traditional Algebra?
2. Explain The Basic Logic Operators In Boolean Algebra (AND, OR, NOT) With Examples.
3. State And Explain Any Two Basic Theorems Or Properties Of Boolean Algebra.
4. Differentiate Between Product Of Sums And Sum Of Products In Boolean Algebra. Provide An Example For Each.
5. What Is A Karnaugh Map, And How Is It Used To Simplify Boolean Expressions? Provide A Brief Explanation.
6. Describe How Karnaugh Maps Are Used For Two, Three, Four, And Five Variables. Provide An Example For A Two-Variable K-Map.
7. Explain The Process Of Converting A Boolean Expression Into A Logic Circuit.
8. How Can NAND And NOR Gates Be Used To Implement Any Other Logic Gate? Provide An Example For Each.
9. What Are "Don't-Care" Conditions In Boolean Algebra, And How Are They Used In Simplifying Expressions?
10. Briefly Describe The Tabulation Method In Boolean Algebra And Provide A Simple Illustration.

ATMIYA UNIVERSITY

Faculty of Engineering and Technology

Department of Electrical Engineering

UG Semester – IV

Subject Code: - 21BTEECC402

Subject Name: - Digital Electronics & Microprocessor

Question Bank

1. **Define The Term "Binary System."**
2. **What Is The Purpose Of A Flip-Flop In Digital Circuits?**
3. **Explain The Concept Of A Logic Gate.**
4. **Differentiate Between Combinational And Sequential Circuits.**
5. **What Is The Significance Of A Truth Table In Digital Logic?**
6. **What Is The Purpose Of A Multiplexer?**
7. **Define The Term "Decoder" In Digital Electronics.**
8. **Explain The Working Principle Of A Shift Register.**
9. **What Is The Difference Between Synchronous And Asynchronous Counters?**
10. **Describe The Function Of A Comparator In Digital Circuits.**
11. **What Is The Role Of A Digital Encoder?**
12. **Explain The Significance Of The Karnaugh Map In Simplifying Boolean Expressions.**
13. **Differentiate Between Positive-Edge And Negative-Edge Triggered Flip-Flops.**
14. **Define The Term "Bus" In The Context Of Digital Systems.**
15. **What Is The Purpose Of A Digital-To-Analog Converter (DAC)?**
16. **Explain The Concept Of Asynchronous Communication.**
17. **Define The Term "Bitwise Operation" In Digital Logic.**
18. **What Is The Significance Of A Multiplexer In Digital Circuits?**
19. **Explain The Working Principle Of A Binary Adder.**
20. **What Is The Function Of A Microprocessor In A Computer System?**
21. **Differentiate Between RISC And CISC Architectures.**
22. **Define The Term "Opcode" In Microprocessor Programming.**
23. **Explain The Concept Of A Register In A Microprocessor.**
24. **What Is The Purpose Of The Instruction Set In A Microprocessor?**
25. **Describe The Role Of The Program Counter In Microprocessor Architecture.**
26. **What Is The Difference Between RAM And ROM In A Microprocessor System?**
27. **Explain The Function Of The ALU (Arithmetic Logic Unit) In A Microprocessor.**
28. **What Is An Interrupt In Microprocessor Programming?**
29. **Define The Term "Assembly Language" In The Context Of Microprocessors.**

Atmiya University

30. **Explain The Significance Of The Stack Pointer In Microprocessor Architecture.**
31. **Differentiate Between The Address Bus And Data Bus In A Microprocessor.**
32. **What Is The Purpose Of The Control Unit In A Microprocessor?**
33. **Explain The Role Of The Accumulator In Microprocessor Programming.**
34. **Define The Term "Microcode" In Microprocessor Design.**
35. **What Is The Significance Of The Fetch-Execute Cycle In Microprocessor Operation?**
36. **Explain The Concept Of Pipelining In Microprocessor Architecture.**
37. **Describe The Function Of The Clock Signal In A Microprocessor System.**
38. **What Is The Role Of The Flags Register In Microprocessor Programming?**
39. **Define The Term "Machine Language" In The Context Of Microprocessors.**
40. **How Is Data Represented In A Microprocessor - Parallel Or Serial?**
41. **What Is The Significance Of The Hexadecimal Number System In Digital Electronics?**
42. **Explain The Concept Of A Shift-Left Operation In Digital Circuits.**
43. **How Is Logical NOT Represented In Boolean Algebra?**
44. **What Is The Purpose Of The Z80 Microprocessor In Computing History?**
45. **Define The Term "Memory Address Space" In The Context Of Microprocessors.**
46. **Explain The Difference Between A Latch And A Flip-Flop.**
47. **What Is The Role Of A Clock Generator In A Microprocessor System?**
48. **Describe The Function Of An AND Gate In Digital Logic.**
49. **How Does The Von Neumann Architecture Differ From The Harvard Architecture In Microprocessors?**

ATMIYA UNIVERSITY

Faculty of Engineering and Technology

Department of Electrical Engineering

UG Semester – IV

Subject Code: - 21BTEECC403

Subject Name: - Electromagnetic Theory

Question Bank

1. **Define Scalars And Vectors.**
2. **Provide Three Examples Of Physical Quantities That Can Be Represented As Vectors And Three Examples That Are Scalars.**
3. **Explain The Significance Of Direction In Vector Quantities.**
4. **Perform The Vector Addition: A = 3i+4j-2k And B = -2i+7j+K**
5. **Find The Magnitude And Direction Of The Resultant Vector C = A + B.**
6. **Explain The Concept Of The Rectangular Coordinate System. If A Point Is Given By P (5,–3,2) Find The Distance Of The Point From The Origin.**
7. **Given A Vector V=2i–3j+6k, Find Its Vector Components Along The X, Y, And Z Axes. Normalize The Vector.**
8. **Compute The Dot Product Of The Vectors P=3i–2j+4k And Q=2i+5j–K.**
9. **Calculate The Cross Product Of The Vectors U=I+2j–3k And V=4i–J+2k.**
10. **Explain The Use Of Circular, Cylindrical, And Spherical Coordinate Systems In Three-Dimensional Space.**
11. **If A Point Is Given In Circular Coordinates P (5,60°,3), Convert These Coordinates To Rectangular Coordinates.**
12. **Convert The Rectangular Coordinates Q (2,–1,4) To Spherical Coordinates.**

ATMIYA UNIVERSITY

Faculty of Engineering and Technology

Department of Electrical Engineering

UG Semester – IV

Subject Code: - 21BTEECC403

Subject Name: - Electromagnetic Theory

Question Bank

1. **Define The Term 'Steady Magnetic Field.' How Does It Differ From A Time-Varying Magnetic Field?**
2. **Write A Short Note On Bio-Savart Law. Provide A Mathematical Expression For The Law.**
3. **Write A Short Note On Ampere's Circuital Law.**
4. **What Is The Concept Of Magnetic Flux? How Is It Related To The Magnetic Field And The Area Through Which The Field Passes?**
5. **Define Magnetic Flux Density. How Is It Different From Magnetic Field Intensity?**
6. **Discuss The Curl And Its Role In Understanding The Behavior Of A Magnetic Field. How Is The Curl Related To The Circulation Of Magnetic Field Lines?**
7. **Explain Stokes' Theorem And How It Is Employed In Relating The Line Integral Of Magnetic Field Intensity To The Surface Integral Of Magnetic Flux Density.**
8. **Differentiate Between Scalar And Vector Magnetic Potentials. Why Are These Potentials Useful In Analyzing Magnetic Fields?**
9. **Provide A Step-By-Step Derivation Of Ampere's Circuital Law From The Bio-Savart Law. Highlight The Assumptions Made During The Derivation.**

ATMIYA UNIVERSITY

Faculty of Engineering and Technology

Department of Electrical Engineering

UG Semester – IV

Subject Code: - 21BTEECC403

Subject Name: - Electromagnetic Theory

Question Bank

1. **Define Scalars And Vectors. Provide Examples Of Each And Explain The Key Differences Between Them.**
2. **Given Vector $A = 3i - 4j + 2k$, Find Its Magnitude And Represent It In Unit Vector Form.**
3. **Explain The Concept Of The Dot Product Between Two Vectors. Compute The Dot Product Of Vectors $B = 2i - 3j + 5k$ And $C = 4i + 1j - 2k$.**
4. **Calculate The Angle Between Vectors $D = i + 2j - 3k$ And $E = 3i - j + 4k$ Using The Dot Product.**
5. **Define The Cross Product Of Two Vectors. Compute The Cross Product Of Vectors $F = 2i + 3j - k$ And $G = i - 4j + 2k$.**
6. **Given Vector $H = 3i + 4j - 2k$, Find A Unit Vector In The Direction Of H.**
7. **Explain The Concept Of A Vector Field. Provide A Real-World Example And Discuss Its Significance.**
8. **Represent The Point (4, 30°, 2π/3) In Cylindrical Coordinates. Explain The Transformation From Rectangular Coordinates.**
9. **Convert The Vector $J = 2i - j + 3k$ From Rectangular Coordinates To Spherical Coordinates.**
10. **Compare And Contrast Circular, Cylindrical, And Spherical Coordinate Systems. Provide Examples Of Situations Where Each Coordinate System Is Most Suitable.**
11. **Define Electromagnetic Theory And Its Significance.**
12. **Explain Coulomb's Law And Its Application.**
13. **Describe The Concept Of Electric Field Lines And Their Characteristics.**
14. **What Is Gauss's Law, And How Is It Used To Calculate Electric Flux?**
15. **Define Electric Potential. How Is It Related To Electric Field Strength?**
16. **Explain The Principles Of Magnetic Fields And The Concept Of Magnetic Lines Of Force.**
17. **State Ampere's Law And Its Role In Calculating Magnetic Field Intensity Around A Current-Carrying Conductor.**
18. **Define Faraday's Law Of Electromagnetic Induction. How Does It Relate To Lenz's Law?**
19. **Describe The Phenomenon Of Electromagnetic Waves. What Are Their Characteristics?**
20. **Explain The Differences Between Conductors, Insulators, And Semiconductors.**

Atmiya University

21. **List And Explain Maxwell's Equations.**
22. **How Do Maxwell's Equations Unify The Laws Of Electricity And Magnetism?**
23. **Discuss The Significance Of Displacement Current In Maxwell's Equations.**
24. **Explain The Concept Of Electromagnetic Waves Using Maxwell's Equations.**
25. **How Are Maxwell's Equations Applied In Different Areas Of Engineering?**
26. **Define Inductance And Explain Its Significance In Electromagnetic Circuits.**
27. **Describe The Factors Affecting Inductance In A Coil.**
28. **Explain The Concept Of Mutual Inductance And Its Applications.**
29. **Define Magnetic Reluctance And Its Role In Magnetic Circuits.**
30. **Discuss The Analogy Between Electric And Magnetic Circuits.**
31. **What Are Standing Waves On A Transmission Line, And How Are They Measured?**
32. **Define Characteristic Impedance And Its Importance In Transmission Lines.**
33. **Describe The Concept Of Waveguides In Electromagnetic Theory.**
34. **Explain The Differences Between T_e And T_m Modes In Waveguides.**
35. **Discuss The Applications Of Waveguides In Communication Systems.**

Atmiya University

ATMIYA UNIVERSITY

Faculty of Engineering and Technology

Department of Electrical Engineering

UG Semester – IV

Subject Code: - 21BTEECC401

Subject Name: - Rotating AC Machine

Question Bank

1. **Define A Synchronous Motor. What Is Its Primary Function, And In What Applications Are Synchronous Motors Commonly Used?**
2. **Explain The Working Principle Of A Synchronous Generator. How Does It Convert Mechanical Energy Into Electrical Energy, And What Is The Key Role Of Synchronization In This Process?**
3. **Describe The Starting Methods For A Synchronous Motor.**
4. **Describe The Constructional Features Of A Synchronous Motor. Highlight The Key Components Such As The Rotor And Stator.**
5. **What Is The Significance Of The Term "Synchronous Speed" In The Operation Of A Synchronous Motor? How Is It Related To The Frequency Of The Electrical Supply And The Number Of Poles In The Motor?**
6. **Discuss The Basic Differences Between A Synchronous Motor And An Induction Motor. Highlight At Least Three Key Distinctions.**
7. **What Is The Role Of The Field Winding In A Synchronous Generator? How Does The Excitation Of The Field Winding Impact The Voltage Output Of The Generator?**
8. **Application Of A Synchronous Motor And One Application Of A Synchronous Generator.**

ATMIYA UNIVERSITY

Faculty of Engineering and Technology

Department of Electrical Engineering

UG Semester – IV

Subject Code: - 21BTEECC401

Subject Name: - Rotating AC Machine

Question Bank

1. **Define An Induction Motor. How Does It Differ From Other Types Of Electric Motors?**
2. **Explain The Basic Working Principle Of An Induction Motor.**
3. **What Is The Purpose Of The Squirrel Cage Rotor In An Induction Motor?**
4. **Discuss The Concept Of Slip In An Induction Motor. How Is Slip Related To The Speed Of The Rotor And The Synchronous Speed Of The Motor?**
5. **Define An Induction Generator. How Does It Differ From An Induction Motor In Terms Of Its Operation And Application?**
6. **Explain The Starting Methods For Induction Motors.**
7. **Describe The Key Characteristics Of An Induction Motor Torque-Speed Curve. What Information Can Be Obtained From This Curve?**

ATMIYA UNIVERSITY

Faculty of Engineering and Technology

Department of Electrical Engineering

UG Semester – IV

Subject Code: - 21BTEECC401

Subject Name: - Rotating AC Machine

Tutorial No. : – 1 No-Load & Blocked Rotor Test

1. **A Three-Phase Induction Motor Has The Following Specifications:**
   - **Power Rating: 15 HP**
   - **Voltage: 440 V (Line Voltage)**
   - **Frequency: 60 Hz**
   - **Efficiency: 90%**
   - **Power Factor: 0.85 Lagging**
   - **Stator Resistance Per Phase: 0.5 Ohms**
   - **Stator Reactance Per Phase: 2 Ohms**
   - **Rotor Resistance Per Phase: 0.3 Ohms**
   - **Rotor Reactance Per Phase: 1.8 Ohms**

   Determine The Following:

   - **Line Current Drawn By The Motor.**
   - **Active Power Consumed By The Motor.**
   - **Reactive Power Consumed By The Motor.**
   - **Apparent Power Consumed By The Motor.**
   - **Slip Of The Motor.**
2. **A Four-Pole, Three-Phase Induction Motor Is Connected To A 440 V, 60 Hz Power Supply. The Motor Has A Stator Resistance Of 0.2 Ohms Per Phase, A Stator Reactance Of 1.5 Ohms Per Phase, A Rotor Resistance Of 0.15 Ohms Per Phase, And A Rotor Reactance Of 1.2 Ohms Per Phase. The Rated Power Of The Motor Is 20 HP. Determine The Following:**
   - **Synchronous Speed Of The Motor.**
   - **Slip At Full Load.**
   - **Line Current At Full Load.**
   - **Power Factor At Full Load.**
   - **Active Power At Full Load.**
   - **Reactive Power At Full Load.**
   - **Apparent Power At Full Load.**

ATMIYA UNIVERSITY

Faculty of Engineering and Technology

Department of Electrical Engineering

UG Semester – IV

Subject Code: - 21BTEECC401

Subject Name: - Rotating AC Machine

Tutorial No. : – 2 Circle Diagram.

1. **A 3-Phase Synchronous Motor Is Rated At 500 KVA, 0.8 Power Factor (Lagging), And 13.8 KV. The Synchronous Reactance Is 2Ω, And The Armature Resistance Is Negligible. Determine The Following:**
   A. **The Synchronous Speed Of The Motor. B. The Line Current When Operating At Rated Conditions. C. The Power Factor When The Motor Is Operating At Full Load With An Armature Current Of 200 A.**

2. **A 4-Pole, 3-Phase Synchronous Motor Has A Synchronous Reactance Of 1.5Ω And An Armature Resistance Of 0.2Ω. The Motor Is Connected To A 3-Phase, 400 V, 50 Hz Power Supply. Determine The Following:**
   A. **The Synchronous Speed Of The Motor. B. The Induced EMF When The Motor Is Operating At No-Load Conditions. C. The Power Factor Of The Motor When Operating At Full Load With A Power Output Of 100 KW.**

ATMIYA UNIVERSITY

Faculty of Engineering and Technology

Department of Electrical Engineering

UG Semester – IV

Subject Code: - 21BTEECC401

Subject Name: - Rotating AC Machine

Tutorial No. : – 3 Induction Generators

1. **Consider An Induction Generator With The Following Specifications:**
   - I. **Rated Power: 1 MW**
   - II. **Rated Voltage: 690 V**
   - III. **Rated Speed: 1500 RPM**
   - IV. **Rated Frequency: 50 Hz**
   - V. **Number Of Poles: 4**

   Assuming The Generator Operates Under Ideal Conditions, Calculate The Following:
   - **Synchronous Speed (Ns):**
   - **Slip (S):**
   - **Rotor Speed (Nr):**

2. **Consider An Induction Generator With The Following Specifications:**
   - I. **Rated Power Output (P): 1.5 MW**
   - II. **Rated Voltage (V): 690 V**
   - III. **Rated Frequency (F): 60 Hz**
   - IV. **Power Factor (PF): 0.85**

   Calculate The Following Parameters:
   - **Rated Current (I) In The Stator.**
   - **Rated Apparent Power (S).**

ATMIYA UNIVERSITY

Faculty of Engineering and Technology

Department of Electrical Engineering

UG Semester – IV

Subject Code: - 21BTEECC401

Subject Name: - Rotating AC Machine

Tutorial No. : – 4 Loads And Power Factor Control.

1. **Given Parameters:**
   I. **Synchronous Generator Rating: 100 MVA**
   II. **Rated Voltage: 13.8 KV**
   III. **Rated Power Factor: 0.8 Lagging**
   IV. **Generator Internal Voltage: 14.4 KV**
   V. **Load Power Factor: 0.9 Lagging**
   VI. **Initial Load: 80 Mw At A Power Factor Of 0.9 Lagging**

Calculate:

- **The Current Supplied By The Generator Before Load Adjustment.**
- **The New Load (In Mw) If The Power Factor Is Adjusted To 0.8 Lagging.**

2. **Given Parameters:**
   I. **Synchronous Generator Rating: 50 MVA**
   II. **Rated Voltage: 11 KV**
   III. **Rated Power Factor: 0.85 Lagging**
   IV. **Generator Internal Voltage: 11.5 KV**
   V. **Initial Load: 40 Mw At A Power Factor Of 0.9 Lagging**

Calculate:

- **The Current Supplied By The Generator Before Power Factor Adjustment.**
- **The New Power Factor Required To Reduce The Current By 20%.**

ATMIYA UNIVERSITY

Faculty of Engineering and Technology

Department of Electrical Engineering

UG Semester – IV

Subject Code: - 21BTEECC401

Subject Name: - Rotating AC Machine

Tutorial No. : – 5 Equivalent Circuit Of 1-Phase Induction Motor

1. **Given Data:**

   Consider A 1-Phase Induction Motor With The Following Specifications:

   I. **Rated Power: Prated=5KW**
   II. **Rated Voltage: Vrated=220V**
   III. **Rated Current: Irated=20A**
   IV. **Power Factor At Rated Conditions: Cosϕrated=0.8**
   V. **Stator Resistance: R1=0.5Ω**
   VI. **Stator Reactance: X1=2.0Ω**
   VII. **Magnetizing Reactance: Xm=15.0Ω**

   Calculations:

   - **Calculate Apparent Power (S)**
   - **Determine Active Power (P) And Reactive Power (Q):**
   - **Total Impedance (Z):**
   - **Admittance Of Magnetizing Branch (Ym):**

2. **Given Data:**

   Consider The Same Motor Operating At A Reduced Voltage Of Vreduced=200V.

   Calculations:

   - **Calculate The New Current (Ireduced):**
   - **Determine The New Power (Preduced) And Power Factor (Cosϕreduced):**
   - **Compare Performance:**

ATMIYA UNIVERSITY

Faculty of Engineering and Technology

Department of Electrical Engineering

UG Semester – IV

Subject Code: - 21BTEECC401

Subject Name: - Rotating AC Machine

Tutorial No. : – 6 Fractional Horse Power Motors

1. **Consider A Fractional Horsepower Motor With The Following Specifications:**
   - I. **Rated Power (Output): 0.5 Horsepower**
   - II. **Motor Efficiency: 85%**
   - III. **Line Voltage: 230 V**
   - IV. **Power Factor: 0.9**

   Calculate The Input Power And Current Drawn By The Motor.

2. **Calculate The Torque Developed By The Same Fractional Horsepower Motor. Given:**
   - I. **Motor Speed: 1750 Rpm**
   - II. **Rated Power: 0.5 Horsepower**

ATMIYA UNIVERSITY

Faculty of Engineering and Technology

Department of Electrical Engineering

UG Semester – IV

Subject Code: - 21BTEECC401

Subject Name: - Rotating AC Machine

Tutorial No. : –7 Pitch Factor And Distribution Factor, MMF Of Distributed Windings

1. **Problem Statement:**

   Consider A 3-Phase, 12-Slot, 4-Pole Stator Winding In A Synchronous Machine. The Coil Span Is 3 Slots. Calculate The Pitch Factor And Distribution Factor For This Winding.

2. **Problem Statement:**

   Consider A 3-Phase Distributed Winding In The Stator Of An Induction Motor. The Coil Turns Per Phase Are 20, And The Peak Flux Per Pole Is 0.04 T0.04t. Calculate The Magneto-Motive Force (MMF) Per Phase.

ATMIYA UNIVERSITY

Faculty of Engineering and Technology

Department of Electrical Engineering

UG Semester – IV

Subject Code: - 21BTEECC401

Subject Name: - Rotating AC Machine

Tutorial No. : –8 MMF Method, ZPF Method & AIEE Method

1. Problem Statement:

Consider A 3-Phase, 4-Pole Synchronous Machine With The Following Specifications:

- **Rated Voltage (Line-To-Line): Vrated=11KV**
- **Rated Current: Irated=500A**
- **Power Factor: PF=0.8 Lagging**
- **Frequency: f=60Hz**

Calculate The Magneto-Motive Force (MMF) Required To Establish The Air Gap Flux.

2. Problem Statement:

For The Same Synchronous Machine As In Example 1, Calculate The Zigzag Per Unit Frequency.

3. Problem Statement:

Consider A 3-Phase Induction Motor With The Following Specifications:

I. Rated Power: Prated=50KW

II. Rated Voltage (Line-To-Line): Vrated=400V

III. Rated Current: Irated=100A

IV. Rated Speed: Nrated=1440RPM

Calculate The Synchronous Speed Ns) And Slip (S).

ATMIYA UNIVERSITY

Faculty of Engineering and Technology

Department of Electrical Engineering

UG Semester – IV

Subject Code: - 21BTEECC401

Subject Name: - Rotating AC Machine

Tutorial No. : –9 Load Sharing Between Parallel Connected Generators

Tutorial Example 1: Equal Power Sharing

Given Parameters:

Generator 1: Rated Power P1=50 MW, Synchronous Reactance Xs=1 Pu

Generator 1: Rated Power P1=50 MW, Synchronous Reactance Xs=1 Pu

Load: P_{Total}=80 MW

Tutorial Example 2 Unequal Power Sharing

Generator 1: Rated Power P1=60 MW, Synchronous Reactance Xs=0.8 Pu

Generator 1: Rated Power P1=40 MW, Synchronous Reactance Xs=1 Pu

Load: P_{Total}=70 MW

ATMIYA UNIVERSITY

Faculty of Engineering and Technology

Department of Electrical Engineering

UG Semester – IV

Subject Code: - 21BTEECC401

Subject Name: - Rotating AC Machine

Tutorial No. : –10 Capability Curves, Two Reaction Model Of Salient Pole Machines, Parallel Operation

1. **Given An Induction Motor With The Following Parameters:**
   - I. **Rated Power (P): 5 KW**
   - II. **Rated Voltage (V): 400 V**
   - III. **Rated Current (I): 10 A**
   - IV. **Power Factor (PF): 0.8**

   Calculate: A. Apparent Power (S). B. Reactive Power (Q). C. Speed (N) At The Rated Load.

2. **An Induction Motor Operates At A Synchronous Speed Of 1800 RPM And Has A Rotor Speed Of 1750 RPM. Calculate The Slip Percentage.**

ATMIYA UNIVERSITY

Faculty of Engineering and Technology

Department of Electrical Engineering

UG Semester – IV

Subject Code: - 21BTEECC401

Subject Name: - Rotating AC Machine

Tutorial No. : –11 Methods Of Starting Of Synchronous Motors

1. **For A Three-Phase Induction Motor, The Stator Resistance Is 1 Ohm Per Phase, And The Reactance Is 5 Ohms Per Phase. Calculate The Starting Torque If The Applied Voltage Is 400 V And The Motor Draws A Starting Current Of 50 A.**

2. **Determine The Rotor Resistance At Which An Induction Motor Will Have Maximum Torque. The Stator Resistance Is 0.5 Ohms, And The Reactance Is 2 Ohms. The Applied Voltage Is 440 V.**

ATMIYA UNIVERSITY

Faculty of Engineering and Technology

Department of Electrical Engineering

UG Semester – IV

Subject Code: - 21BTEECC401

Subject Name: - Rotating AC Machine

Tutorial No. : –12 Synchronous Phase Modifiers V-Curves And Invert V-Curves Of Synchronous Motors.

1. **For A Synchronous Generator With A Rated Voltage Of 1000 V And A Synchronous Speed Of 1200 Rpm: A. Calculate The Frequency Of Generated Power. B. If The Generator Is Supplying 500 A At A Power Factor Of 0.9, Calculate The Apparent Power.**

2. **Two Synchronous Generators Are Operating In Parallel. Generator A Has A Voltage Of 10 KV, And Generator B Has A Voltage Of 11 KV. Determine The Load Sharing Between The Generators Based On Their Voltage Levels.**

ATMIYA UNIVERSITY

Faculty of Engineering and Technology

Department of Electrical Engineering

UG Semester – IV

Subject Code: - 21BTEECC401

Subject Name: - Rotating AC Machine

Question Bank

1. **What Is The Primary Function Of A Synchronous Generator?**
2. **Explain The Concept Of Armature Reaction In A Synchronous Generator.**
3. **What Is The Significance Of Synchronizing A Generator With The Grid Before Connecting It?**
4. **How Does The Voltage Regulation Of A Synchronous Generator Impact Its Performance?**
5. **Describe The Constructional Features Of The Rotor In A Synchronous Generator.**
6. **What Are The Main Types Of Excitation Systems Used In Synchronous Generators?**
7. **Why Is Power Factor Control Important In Synchronous Generators?**
8. **Briefly Explain The Operation Of A Brushless Excitation System In A Synchronous Generator.**
9. **What Is The Role Of The Prime Mover In A Synchronous Generator?**
10. **Differentiate Between A Synchronous Motor And An Induction Motor.**
11. **Explain The Principle Of Operation Of A Synchronous Motor.**
12. **How Is The Speed Of A Synchronous Motor Determined?**
13. **What Is Meant By The Term "Slip" In The Context Of Synchronous Motors?**
14. **Discuss The Applications Of Synchronous Motors In Various Industries.**
15. **Describe The Constructional Features Of The Stator In A Synchronous Motor.**
16. **What Is The Significance Of Damper Windings In Synchronous Motors?**
17. **How Does The Power Factor Of A Synchronous Motor Vary With The Load?**
18. **Define An Induction Motor And Its Primary Working Principle.**
19. **Explain The Concept Of Slip In An Induction Motor.**
20. **Describe The Constructional Features Of The Stator And Rotor In An Induction Motor.**
21. **What Are The Common Types Of Rotors Used In Induction Motors?**
22. **Discuss The Starting Methods Of Induction Motors.**
23. **How Is Torque Developed In An Induction Motor, And How Is It Affected By The Load?**
24. **Why Are Induction Motors Widely Used In Industrial Applications?**
25. **Explain The Importance Of The Air Gap In An Induction Motor.**
26. **Define An Induction Generator And Its Primary Working Principle.**
27. **How Does An Induction Generator Differ From An Induction Motor?**
28. **Describe The Constructional Features Of The Rotor In An Induction Generator.**

29. **Explain The Concept Of Self-Excitation In Induction Generators.**
30. **What Are The Key Advantages Of Using Induction Generators In Wind Power Systems?**
31. **Discuss The Starting Methods Of Induction Generators.**
32. **How Does The Speed Of An Induction Generator Relate To The Frequency Of The Generated Voltage?**
33. **What Are The Applications Of Induction Generators In Standalone Power Systems?**
34. **Compare The Constructional Features Of Synchronous And Induction Motors.**
35. **Explain The Role Of Slip In Both Induction Motors And Generators.**
36. **How Does The Frequency Of The Generated Voltage In A Synchronous Generator Relate To Its Speed?**
37. **Compare The Power Factor Characteristics Of Synchronous And Induction Motors.**
38. **Discuss The Impact Of Load Changes On The Speed Of Synchronous And Induction Motors.**
39. **Describe The Factors Influencing The Efficiency Of Both Synchronous And Induction Generators.**
40. **Explain The Concept Of Reactive Power In The Context Of Synchronous Generators And Induction Motors.**

Atmiya University

ATMIYA INSTITUTE OF TECHNOLOGY AND SCIENCE
CIVIL ENGINEERING DEPARTMENT
MECHANICS OF FLUID
QUESTION BANK (EVEN SEM 2021)

MODULE - 1

1. Define the following fluid properties:
   1) Mass density
   2) Weight density
   3) Specific volume
   4) Specific gravity
   5) Dynamic viscosity
   6) Kinematic Viscosity
   7) Capillarity and Surface tension
   8) Bulk Modulus
   9) Cohesion and Adhesion

2. Define and Explain Newton s Law of Viscosity.

MODULE - 2

3. Explain in details: Hydrostatic Paradox
4. Explain in details: Pascal s Law of Pressure.
5. Briefly explain classification of pressure.

MODULE - 3

6. Derive Formula for
   1) Total pressure on Horizontally Immersed Surface
   2) Total pressure on Vertically Immersed Surface
   3) Total pressure on Inclined Immersed Surface
   4) Centre of pressure on Vertically Immersed Surface
   5) Centre of pressure on Inclined Immersed Surface

MODULE 4

7. Explain the Buckingham s π- theorem for dimensional analysis
8. Determine the dimensions of the following quantities
   (1) Shear Stress
   (2) Angular velocity
   (3) Angular acceleration
   (4) Velocity
   (5) Discharge
   (6) Work done
   (7) Power
9. Discuss the types of the similarities.

10. The efficiency (□) of fan depends on density (□), dynamic viscosity (□), angular velocity (□), diameter (D) & discharge (Q). Express efficiency (□) in terms of dimensionless parameter.

MODULE □5

11. . Derive □Darcy Weisbach□formula for the loss of head due to friction in pipe line.

12. Derive an expression for head loss due to (1) sudden enlargement (2) sudden contraction of pipe.

13. Two reservoirs are connected by two pipes in series of lengths 200 m and 300 m and of diameters 20 cm and 30 cm respectively. The difference of head between the two reservoir water surfaces is 10m. The friction factors for the two pipes are 0.02 and 0.015 respectively. Determine the flow rate.

14. A horizontal pipe of 150 mm diameter is suddenly enlarged to 300 mm diameter. The rate of flow of water through a pipe is 0.2 m^3/sec. The pressure intensity of smaller pipe 125 kPa. Determine (i) Loss of head due to sudden enlargement (ii) Pressure intensity in large pipe.

15. A pipe system consists of three pipes arranged in series

Sr. No.	Pipe	Length (m)	Diameter (cm)
1	AB	1000	40
2	BC	2500	30
3	CA	3000	20

Transform the system to (i) an equivalent length of 30 cm diameter pipe, and
(ii) an equivalent diameter for the pipe 6500 m long

Atmiya University

Course Code	Course Title
18MCESDC401	**Distributed DBMS**

Introduction to DBMS

1. What is a Database Management System (DBMS), and why is it important?
2. What are the key components of a DBMS?
3. What is the difference between a DBMS and a File System?
4. What are the main types of DBMS (e.g., hierarchical, network, relational, object-oriented)?
5. What is a relational database, and how does it differ from other types of databases?
6. What are the advantages of using a DBMS over traditional file storage?

Database Models

7. What is the relational model in DBMS, and how does it organize data?
8. What are tables, rows, and columns in a relational database?
9. What is a primary key, and why is it important in a database?
10. What is a foreign key, and how does it establish relationships between tables?
11. What are the different types of relationships in a relational database (one-to-one, one-to-many, many-to-many)?

SQL and Queries

12. What is SQL (Structured Query Language), and what are its main functions?
13. What is the difference between a SELECT statement and an INSERT statement in SQL?
14. What are JOIN operations in SQL, and how are they used to combine data from multiple tables?
15. What is the purpose of GROUP BY and HAVING clauses in SQL?
16. How do you update data in a table using SQL?
17. What is a subquery in SQL, and how does it differ from a join?

Normalization and Design

18. What is database normalization, and why is it important?
19. Explain the different normal forms (1NF, 2NF, 3NF, BCNF) and their purpose.
20. What is denormalization, and when might it be used?
21. What is an Entity-Relationship (ER) model, and how is it used in database design?

Atmiya University Rajkot

Transactions and Concurrency Control

22. What is a database transaction, and what are its ACID properties (Atomicity, Consistency, Isolation, Durability)?
23. What is concurrency control in DBMS, and why is it important for multi-user systems?
24. What is the difference between optimistic and pessimistic concurrency control?
25. What is a deadlock, and how is it handled in DBMS?

Indexing and Performance

26. What is an index in a database, and how does it improve query performance?
27. What are the different types of indexes in DBMS (e.g., B-tree, hash index)?
28. What is query optimization in DBMS, and how is it achieved?
29. What is the role of database buffers and caches in improving DBMS performance?

Backup, Recovery, and Security

30. What are database backup and recovery, and why are they critical for data integrity?

Atmiya University
Rajkot

Course Code	Course Title
18MCESDC402	**Software Engineering Methodologies**

Introduction to IoT

1. What is the Internet of Things (IoT), and how does it work?
2. What are the key components of an IoT system?
3. How does IoT differ from traditional internet-based systems?
4. What are the benefits of IoT technology for industries and consumers?
5. What are some examples of everyday IoT devices?

IoT Architecture and Technologies

6. What are the layers in IoT architecture, and what role does each layer play?
7. How does the physical layer contribute to IoT functionality?
8. What is the role of the network layer in IoT systems?
9. What is the function of the application layer in IoT architecture?
10. How does cloud computing enhance IoT applications?
11. What is edge computing, and how does it complement IoT technologies?
12. What communication protocols are commonly used in IoT (e.g., MQTT, CoAP, HTTP)?
13. How does the concept of interoperability apply to IoT devices?

IoT Devices and Sensors

14. What are the types of sensors commonly used in IoT devices?
15. How do IoT devices collect and transmit data to the cloud or server?
16. What role do actuators play in IoT systems?
17. What is the difference between passive and active sensors in IoT?
18. How do GPS sensors work in IoT applications?

IoT Communication Networks

19. What is the difference between short-range and long-range communication protocols in IoT (e.g., Bluetooth vs. LoRa)?
20. How does Zigbee technology support IoT communication?
21. What is the significance of 5G networks for the future of IoT?
22. How does LPWAN (Low Power Wide Area Network) benefit IoT applications?

Atmiya University Rajkot

Security and Privacy in IoT

23. What are the main security concerns associated with IoT devices?
24. How do encryption and authentication protect IoT networks and data?
25. What are some strategies to mitigate IoT device vulnerabilities?
26. How do IoT devices manage data privacy, especially in sensitive applications like healthcare?

IoT Applications

27. How is IoT used in smart homes to improve automation and energy efficiency?
28. What are the key IoT applications in healthcare, such as wearable health monitors?
29. How is IoT transforming industries like manufacturing and agriculture (Industrial IoT)?
30. What role does IoT play in smart cities, such as traffic management and waste management?

Atmiya University
Rajkot

. . : : QUESTION BANK : : . .

One Mark Questions.

1. The graphical representation of any problem is known as_____. – **Flow Chart**
2. The step-by-step representation of any problem is known as _____. – **Algorithm**
3. The techniques which are used to solve any problem definition by analyzing any problem are known as _____. **Pre-Programming Techniques**
4. Which symbol is used to show the condition? – **Diamond**
5. Which symbol is used to show the variable declaration? – **Rectangle**
6. How many types of connectors in flowchart? – **2**
7. Which symbol is used to start every flow chart? – **Oval**
8. C is developed by _____ in the year_____. – **Dennis Ritchie, 1972**
9. BCPL stands for_____. – **Basic Combined Programming Language**
10. How many character set categories are available in C – Language? – **4**
11. Whose meaning of the words is already explained to the C Compiler? – **Keywords**
12. How many keywords are available in C-Language? – **32**
13. Keywords are known as _____. – **Reserve Words**
14. The name given to the variable, function or array is known as_____. – **Identifier**
15. _____ is the name given to memory location. – **Variable**
16. _____ are the values, stored inside the variable. – **Constants**
17. How many types of Constants are available in C-Language? – **2**
18. How many types of Numeric Constants are available in C-Language? – **2**
19. How many types of Character Constants are available in C-Language? – **2**
20. The Collection of Character is known as _____. – **Character Set**
21. _____ are the symbols that can perform some operations on operand. – **Operator**
22. How many types of Arithmetic operators are available in C-Language? – **5**
23. How many basic data types are available in C-Language? – **5**
24. ASCII stands for_____. – **American Standard Code for Information Interchange**
25. What is used to define a symbolic constant? – **#define**
26. Which symbol is used to termination of C programming statements? – **Semicolon**
27. Which language translator is used in Turbo-C? – **Compiler**
28. Which translator is interpreting the statements line by line? – **Interpreter**
29. Which type of operator is X+=10? – **Short hand operator**
30. Which operator is used to find the size of particular variable? – **sizeof Operator**
31. Which operator is used to store value into the variable? – **Assignment Operator (=)**
32. Which data type is known as empty data types? – **void**
33. What is the non-executable part of the program? – **Comments**
34. How many types of comments are available in C? – **2**
35. _____ Section is used to include the header files in C-Program. – **Link**
36. If X=9 and Z = X++ + X – –X then value of Z is _____. – **8**

Descriptive Questions.

(1) What is program? Explain programming technique.
- What is program?
- Programming Techniques
- Programming Tools.

(2) Explain Flow chart in detail.
- Definition
- How flow chart is useful.
- Rules to draw a flow chart.
- Symbol for draw a flow chart.

(3) Explain Language Translator.
- About Translator.
- Two types of Translators
  - Compiler
  - Interpreter
- Difference of Compiler and Interpreter

(4) Explain C-Character Set.
- Letter
- Digit
- Special Character
- White Space

(5) Explain C-Tokens.
- Keywords
- Identifiers
- Constants
- Strings
- Special Symbols
- Operators

(6) Explain Constants in detail.

(1) Numeric Constants
  - Integer Constants
  - Real Constants

(2) Character Constants
  - Single Character Constants
  - String Constants

➢ Backslash character Constants

➢ Symbolic Constants

Atmiya University

(7) Explain Different C-Operators.
- Arithmetic operators
- Relational operators
- Logical operators
- Assignment operators
- Increment and Decrement operators
- Conditional operators
- Bitwise operators
- Special operators

(8) Explain Logical operator with an example.
- (1) AND (&&) (2) OR (||) (3) NOT (!)
- Examples (1), (2) and (3)

(9) What is Variable? Explain in detail.
- What is Variable?
- Rules for define variable.
- How to declare variable?
- How to assign a value to the variable?

(10) What is Data Type? Explain Primary (Fundamental) Data Types.
- What is Data Type?
- Primary Data Types.
  - Integer, Float, Character, Double, Void

(11) Explain Basic Structure of C program.
- Documentation Section
- Link Section
- Definition Section
- Global Declaration Section
- Main function Section
  - Declaration Part
  - Executable Part
- Sub Program Section

(12) Explain reading & writing data from keyboard.
- Scanf function
- Printf function
- Example

(13) What is Type Conversion? Explain with an example.
- Definition of Type-Cast
- Description
- Example

Unit – 2

Control Structure

Introduction of Control Structure (Decision Making Statements *or* Conditional statements)

- ✓ Until this point, we have seen that the C program executes from top to bottom sequentially, without skipping any single statement but this type of execution is not useful every time.
- ✓ Many times, it is necessary to change (alter) the flow of sequence of instruction. That means execute the program conditionally.
- ✓ C language supports statements that can be helpful to change the flow of program execution.
- ✓ These statements are called 'Control Statements' OR 'Decision Making Statements' OR 'Conditional Statements '.
- ✓ These statements help to execute the program conditionally, that means depending on the result of condition, some part (block) of the program will execute and some part (block) of the program will skip.
- ✓ The list of statements is as given below:
  - (A) if statement (Forms of if)
  - (B) switch statement
  - (C) Conditional operator statement
  - (D) goto statement
- ✓ These statements are purely known as "Decision Making". And they are also 'control' the flow of execution, they are also known as "Control Statement".
- ✓ Decision making with "if" statement
- ✓ If statement is the powerful decision making statement and is used to control the flow of execution of the statements.
- ✓ C uses the keyword if to implement the decision control instruction.
- ✓ Depending upon the no. of conditions and complexity of the program, one can use any form of if statement from the given list.

(A) Forms of if:

1. Simple if statement
2. if.....else statement
3. Nested if....else statement
4. else if ladder statement

(1) Simple if statement:

- ✓ It allows the computer to evaluate the expression first and then, depending on whether the value of the expression (relation or expression) is 'true' (non-zero) or 'false' (zero), it transfers the control to a particular statement.

➢ **Syntax:**

```
if(test -expression)
{
        statement-block
}
statement-x;
```


Atmiya University

. . : : QUESTION BANK : : . .

One Mark Questions.

1. How many forms of if available in C? – **4**
2. What is another name of Switch Case? – **Branching Statement**
3. What is the multi way decision making statement? – **Switch Case**
4. When we put conditions with every else in program, that Notation is known as_____. – **else if ladder**
5. Which case is executed, while all the expression values are unmatched in switch statement? – **default**
6. When we put one if…else statement within another, is known as_____. – **Nested if else**
7. What is the alternate of the simple if……else block? – **Conditional Operator**
8. Which keyword is used for Jumping Statement? – **goto**
9. Which error will occur while we put semicolon (;) after the if()? – **Misplaced if**
10. Which keyword is used to transfer the control out of switch case block? – **break**
11. What concept is used to perform repetitive task no. of times? – **Loop**
12. Basically, there are _____ types of loops in C-Language. – **Two**
13. How many looping structures are available in C-Language? – **Three**
14. What is the Entry Control Loop in C? – **While**
15. What is the Exit Control Loop in C? – **Do…While**
16. How many parts (parameters) consisting in For Loop? - **Three**
17. What is the first part (parameter) of For Loop? – **Initialization**
18. The variable which is used to count the no. of iterations is known as _____. – **Counter Variable.**
19. Loop within another loop is known as _____. – **Nested Loop**
20. Which keyword is used to terminate the loop? – **break**
21. Which keyword is used to skip or bypass the iteration of loop? – **continue**

Descriptive Questions.

(1) Explain Decision making statements.

- if statement (Forms of if)
- switch statement
- Conditional operator statement
- goto statement

(2) Explain Form of if in C.

- Simple if statement
- if.....else statement
- Nested if....else statement
- else if ladder statement

(3) Explain Branching Statement.
- About Switch Case.
- Syntax
- Description
- Advantage

(4) What is Conditional Operator? Explain with an example.
- About Conditional Operator
- Syntax
- Description
- Example

(5) What is Loop? Explain various looping structure.
- What is loop?
- Type of loop.
- Three looping structure
  - For, While, Do…While

(6) Explain Exit Control Loop with an example.
- About Do…While loop
- Example.

(7) Explain For Loop with an example.
- About For loop
- Description with 3 parts
- Example.

(8) Explain break & continue statements with an example.
- break statement
- break example
- continue statement
- continue example

(9) Explain difference between Entry control loop and Exit control loop

(10) Explain difference between While and Do…While loop

(11) Any type of program of Control structure.

Atmiya University

Unit – 3

Functions (UDF & In-built)

What is Function?

A function is self-contained block of statements that perform a particular task.

There are two types of functions:

(1) Built-in Function

(2) User Defined Function

Built-in Function: Built in functions are provided by the language itself, they are also known as "Library Functions".

User Defined Function (UDF): User Defined Functions are created by the user as per the requirements of the user.

(1) Built-in Functions:

Functions used with <stdio.h>:

❖ **printf( ):**

- ✓ printf( ) function is used to print or display values of variables using the standard output device (monitor). It has following form:
- ✓ printf("fromat string", v1, v2, …… vn);
- ✓ Where v1, v2, …. vn are variables whose values are to be displayed in the monitor. "Format string" is the control string which represents the format specification.
- ✓ There are several format specifiers - the one you use should depend on the type of the variable you wish to print out. Here are the common ones:

Format Specifier	Type
%d (or %i)	int
%h	short int
%u	unsigned int
%ld	long int
%c	char
%f	float
%lf	double
%L	Long double
%s	string
%x	Hexadecimal

- ✓ This function apply first format specifier to first argument, second format specifier to second argument, third to third .. etc…. to end of the format.

. . : : QUESTION BANK : : . .

One Mark Questions.

1. Which header file should be included to use printf()? – **stdio.h**
2. Which header file should be included to use gets()? – **stdio.h**
3. Which header file should be included to use getchar()? – **conio.h**
4. Which header file should be included to use cprintf()? – **conio.h**
5. Which header file should be included to use ceil()? – **math.h**
6. Which header file should be included to use isdigit()? – **ctype.h**
7. Which header file should be included to use strcmp()? – **string.h**
8. How many types of UDF available in C? – **Four**
9. A function call itself is known as _____. – **Recursion**
10. A _____ is a self-contained block of statements that perform a particular task. – **Function**
11. How many types of function are available in C? – **Two**
12. Which function asks a character from user but not display its input on screen? – **getch()**
13. What is the output of → floor(-9.5)=? – **-10**
14. What is the output of → ceil(0.1)=? – **1**
15. What will be the output of → abs(-10)=? – **10**
16. What will be the output of → fabs(10.7)? – **10.7**
17. Which function is used to clear the previous input of user? – **fflush()**
18. The function name with the coding block is known as _____. – **Function definition**
19. What is the default return data type of UDF? – **int**
20. What is the range of argument of textcolor()? – **0 to 15**
21. What is the range of argument of textbackground()? – **0 to 7**
22. Which function is necessary to get effect while textcolor() is used? – **cprintf()**
23. How many argument(s) is/are required for gotoxy()? – **Two**

Descriptive Questions.

(1) What is Function? Explain the function used with stdio.h.
- What is Function?
- Types of Function
- Function list used with stdio.h.
- Example

(2) What is Function? Explain the function used with conio.h.
- What is Function?
- Types of Function
- Function list used with conio.h.
- Example

(3) What is Function? Explain the function used with math.h.
- What is Function?
- Types of Function
- Function list used with math.h.
- Example

(4) What is Function? Explain the function used with ctype.h.
- What is Function?
- Types of Function
- Function list used with ctype.h.
- Example

(5) What is Function? Differences between getch , getche and getchar
- What is Function?
- Difference with an example

(6) What is User Define Function? Explain Elements of UDF.
- What is UDF?
- Elements of UDF
  - Function Declaration
  - Function Call
  - Function Definition
- Example

(7) What is User Define Function? Explain types of UDF.
- What is UDF?
- Types of UDF
- Example

(8) What is Recursion? Explain with an example.
- What is Recursion?
- Descriptions with an example

(9) Explain formatting function.
- gotoxy(), textcolor(), textbackground(), cprintf()
- Descriptions with an example

(10) Explain single character function.
- getchar(), getche(), getch()
- putchar(), putch()
- Example

(11) Explain Array as a function argument with an example.
- Description
- Example

(12) Any type of program of Function.

Atmiya University

. . : : QUESTION BANK : : . .

One Mark Questions.

1. An array is also known as _____ Data Type. – **Derived**
2. An array is indicated by number is known as _____. – **Index Number**
3. Which character is used to terminate a string array? – **NULL Character *or* (\0)**
4. What is the collection of elements having similar data type? – **Array**
5. What is the last index of an array? – **n-1**
6. Which function is used to concatenate two strings? – **strcat()**
7. Which function is used to compare two strings? – **strcmp()**
8. What is the return data type of the strcmp()? – **int**
9. What value is return by strcmp(), if both the values are match? – **0 (ZERO)**

Descriptive Questions.

(1) What is an Array? Explain in detail.
- What is an Array?
- Types of an Array with syntax

(2) Explain one dimensional array with an example.
- Description
- Example

(3) Explain two dimensional array with an example.
- Description
- Example

(4) What is a Character Array? Explain in detail.
- What is an Array?
- Character Array with an example

(5) Explain String Handling Function with an example.
- Strcat(), strcmp(), strlen(), strcpy(), strrev(), strupr(), strlwr()
- Examples

(6) Explain Array as a function argument.
- Description
- Example

(7) Any types of programs can ask using Control Structure or an Array.

Atmiya University

. . : : QUESTION BANK : : . .

One Mark Questions.

1. The _____ is the collection of elements having different data types. – **Structure**
2. Structure is known as _____ Data Types. – **User Defined**
3. Union is known as _____ Data Types. – **User Defined**
4. Which keyword is used to define a Structure? – **struct**
5. Which keyword is used to define a Union? – **union**
6. The collection of data variable inside the structure is known as _____ variable. – **Member**
7. What is used to access the members of the structure? – **Dot operator**
8. Dot operator is known as _____. – **Member Accessing Operator**
9. An array as a member of a structure is known as _____. – **Array within Structure**
10. An array as a structure access variable is known as _____. – **Array of Structure**

Descriptive Questions.

(1) What is Structure? Explain structure type variable.
- About Structure
- Declaring a structure type variable
- Example

(2) What is Structure? How to access the member variable of structure?
- About Structure
- Accessing the member variable
- Example

(3) Explain array within structure and array of structure.
- Description of array within structure
- Description of array of structure
- Example

(4) Explain structure as a function argument with an example.
- Description of Structure as a function argument
- Example

(5) Explain Union in detail.
- Description of Union
- Example

(6) What is Union? Explain difference between Structure and Union.
- About Union
- Difference of Structure and Union
- Example

(7) Explain difference between Array and Structure.
- Difference of Array and Structure
- Example

(8) Any type of program of Structure.

Question Bank: (1 Mark Questions)

1) Which searching technique is known as sequential search? – **Linear Search**
2) Which sort only compares adjacent elements? – **Bubble Sort**
3) Which sort works similar to the sorting of playing cards in hands? – **Insertion Sort**
4) Which sort should not be used on large amount of data? – **Bubble Sort**
5) Which sort works by repeatedly finding smallest element from data? – **Selection Sort**
6) Which searching techniques required sorted list to search a particular data? – **Binary Search**
7) Which technique is used to search element from unsorted list? – **Linear Search**
8) Which searching technique consumes more time and reduces the power of system? – **Linear Search**
9) Which searching technique follows the divide and conquers approach? – **Binary Search**
10) Which sorting technique required sorted list? – **Merge Sort**

Atmiya University Rajkot

Question Bank: (7 Marks Questions)

1) What is sorting technique? Explain Bubble sort.
   Ans. Sorting Technique
   Bubble Sort
   Advantages
   Disadvantages

2) What is sorting technique? Explain Selection sort.
   Ans. Sorting Technique
   Selection Sort
   How it works?

3) What is sorting technique? Explain Insertion sort.
   Ans. Sorting Technique
   Insertion Sort
   Advantages
   Disadvantages

4) What is sorting technique? Explain Merge sort.
   Ans. Sorting Technique
   Merge Sort

5) What is Searching Techniques? Explain Linear Search.
   Ans. Search Techniques
   Linear Search
   Advantages
   Disadvantages
   Example

6) What is Searching Techniques? Explain Binary Search.
   Ans. Searching Techniques
   Binary Search
   Example

7) Any type of program from this chapter.
   Ans. Program code

Question Bank: (1 Mark Questions)

1) A data structure is classified into _____ categories. – **Two**
2) How many type(s) of data structure is/are available in C? – **2**
3) Which type of data structure is Queue? – **Linear type**
4) Which principle followed by Stack in DS? – **LIFO**
5) Which data type that can hold either a True or a False value? – **Boolean**
6) The first element to be inserted will be removed last, that type of method is known as _____. – **LIFO**
7) Which type of data structure is Queue in C? – **FIFO**
8) In which method last entered value is stay at top of the position in C? – **Stack**
9) Insert data is known as _____ operation in stack. – **Push**
10) Which operation is used to remove or delete the data from stack? – **POP**
11) A line at the bus stop is an example of _____. – **Queue**
12) Which value is deleting in Queue of DS? – **First**
13) In which type of method Q[0] comes after the Q[n] in DS? – **Circular Queue**
14) What is the value of front while Queue is empty? – **-1**
15) How many element(s) is/are in Queue while rear and front got same position? – **1**
16) Which types of situations occurred while entered element got last position in Queue? – **Overflow**
17) Insertion of elements to the queue is known as _____. – **Enqueue**
18) Removal of elements from the queue is known as _____. – **Dequeue**
19) Which value is assigned to front and rear after deletion of last value of Queue? – **-1**
20) What is an example of nonlinear data structure? – **Tree, Graph**
21) If in an array implementation of circular queue, the elements were inserted in the order 10, 20, 30 and 40 and the array now looks like

30	40	10	20

then the value of front is _____ and value of rear is _____. – **2, 1**

Atmiya University Rajkot

Question Bank: (5/7 Marks Questions)

1) What is Data Structure? Explain Linear Data Structure.
   Ans. About Data Structure
   Linear Data Structure

2) What is Data Structure? Explain Non-Linear Data Structure.
   Ans. About Data Structure
   Non-Linear Data Structure

3) What is Data Structure? Explain Primitive and Non primitive data type.
   Ans. About Data Structure
   Primitive data type
   Non primitive data type

4) What is Stack? Explain operation on stack.
   Ans. Concept of Stack
   Operations: Push, Pop, Display, Delete,

5) Explain the application on stack in recursion.
   Ans. Explanation of Stack in Recursion

6) What is Queue? Explain operation on Queue.
   Ans. Concept of Queue
   Operations: Enqueue, Dequeue, Display, Update

7) What is Circular Queue? Explain advantages of Circular Queue.
   Ans. Concept of Circular Queue
   Operations: Enqueue, Dequeue, Display, Update

8) Write a program of Stack.
   Ans. Program Code

9) Write a program of Queue.
   Ans. Program Code

10) Write a program of Circular Queue.
    Ans. Program Code

Atmiya University Rajkot

Question Bank: (1 Mark Questions)

1) A linked list is a _____ type data structure. – **Linear**
2) Which keyword is used to provide some meaningful names for the data type? – **typedef**
3) Linked List can be defined as collection of objects known as _____. – **node**
4) Which operator is used to access the member variable of structure using pointer? – **Aero Operator**
5) The last node of simple linked list contains _____ in its next address field. – **NULL**
6) Which function is used to allocate memory for data? – **malloc**
7) Which function is released the memory space which are not required? – **free**
8) Which value contain last pointer, while all the data are deleted in circular linked list? - **NULL**
9) Which type of linked list is also known as one-way linked list. – **Singly Linked List**
10) A linked list in which last node points to the first node is called _____ linked list. – **Circular**
11) Which linked list is two-way traverse and no contain NULL value? – **Doubly Circular**
12) Which linked list can traverse in reverse order? – **Doubly Linked List**
13) Which option returns how many values are available in to the record list? – **Count**
14) To visit each node or record _____ is required in linked list. – **Traversing**
15) Which type of linked list required and used two NULL value in it? – **Doubly Linked List**

Atmiya University Rajkot

Question Bank: (7 Marks Questions)

1) What is Linked list?
   Ans. Definition
   Concept
   Linked List Representation
   Uses of Linked List

2) What is Linked List? Explain singly linked list.
   Ans. Definition of linked list
   Singly linked list
   Example
   Advantages
   Disadvantages

3) What is Singly Linked List? Explain basic operations of linked list.
   Ans. Definition of linked list
   Singly circular linked list
   Basic Operations on linked list.

4) What is Linked List? Explain doubly linked list.
   Ans. Definition of linked list
   Example
   Advantages
   Disadvantages

5) What is Linked List? Explain doubly circular linked list.
   Ans. Definition of linked list
   Example
   Advantages
   Disadvantages

6) Program for any operation of linked list.
   Ans. Add, Display, Delete, Update, Search, Sort, Count

Atmiya University Rajkot

Question Bank: (1 Mark Questions)

1) Which type of data structure is Tree? – **Non-Linear/Hierarchical**
2) Which node doesn't have any parent? – **Root**
3) The connecting link between any two nodes is known as an _____. – **edge**.
4) How many edges are used for n number of nodes in a tree? – **n-1**
5) The nodes that have the same parent are known as _____. – **siblings**
6) All terminal nodes are known as _____ node. – **Leaf**
7) How many degree(s) is/are available of leaf node? – **Zero**
8) Leaf nodes are known as _____. – **External/Terminal nodes**
9) A node has at least one child node known as _____. – **an Internal node**
10) Number of nodes connected with one node is called _____. – **degree.**
11) Total number of edges from the node to the deepest leaf is known as _____ of that node. – **Height**
12) Total number of edges from a particular node to the root node is called as _____ of that node. – **Depth**
13) What is a process to visit all the nodes of a tree and may access values too? – **Traversal**
14) How many types of traversal techniques are available in a tree? – **Three**
15) In which traversal method, the root node is visited first? – **pre-order**
16) In which traversal method, the root node is visited last? – **post-order**
17) Stand by: AVL – **Adelson-Velsky and Landis**
18) Which tree obeys the binary search tree as well as a balancing factor? – **AVL Tree**
19) The balancing factor's value must be _____. – **0, -1, 1**
20) How many types of rotations are used in AVL tree? – **Four**
21) Which tree contains an extra bit that represents a color? – **Red-black**
22) In the Red-Black tree, the root node is always _____ in color. – **black**
23) Which nodes have always zero height? – **Leaf**
24) Which nodes has always zero depth? – **Root**

Atmiya University Rajkot

Question Bank: (7 Marks Questions)

1) What is a Tree? Explain its properties (important terms).
   Ans. Definition and concept
   Different properties

2) What is a Tree? Explain types of trees.
   Ans. Definition and concept
   Different Types (Binary, BST, AVL, Red & Black)

3) What is BST? Explain traverse with an example.
   Ans. About Binary Search Tree
   Advantages of Binary Search Tree
   Three types of traverses (in-order, Pre-order, Post-order)

4) What is AVL Tree? Explain its balance factor. ***Or*** Explain different rotations.
   Ans. Concept of AVL tree
   Different rotations

5) What is Tree? Explain Red and Black tree.
   Ans. Definition of tree
   Concept of Red & Black tree
   Properties of red-black tree.

6) Create a Binary Search Tree from given series and write in-order traverser.
   Ans. BST Structure

7) Create a AVL Tree from given series and write down the values of second level.
   Ans. AVL Tree Structure

Atmiya University Rajkot

Question Bank: (1 Mark Questions)

1) Which graph has no self-loops and no parallel edges? – **Simple Graph**
2) Which graph has no self-loops but having parallel edges? – **Multi graph**
3) Which graph does not contain any single edge in it? – **Null Graph**
4) Which graph is labeled with some weights or numbers? – **Weighted Graph**
5) Which graph containing at least one cycle in it? – **Cyclic Graph**
6) Which graph is never connected with same group or set but connect with another group or set? – **Bipartite Graph**
7) Users on Facebook are referred to as _____ in graph application. – **Vertices**
8) _____ are the edges of google map graph application. – **Road or Flights**
9) In google map graph application cities or landmark is known as _____. – **Vertices**
10) Which value is represented while row and column vertices are connected with each other? – **1**
11) BFS stands for _____. – **Breadth First Search**
12) DFS stands for _____. – **Depth First Search**
13) Which graph representation is based on Linked List? – **Adjacency List**
14) _____ finds the edges to be used in the search process without creating loops. – **Graph traversal**
15) A _____ graph is required to find out a minimum spanning tree. – **Weighted**

Atmiya University Rajkot

Question Bank: (7 Marks Questions)

1) What is graph? Explain the different types of graphs.
   Ans. Graph Introduction
   Types of Graphs

2) What is graph? Explain the graph application.
   Ans. Graph Introduction
   Different graph application

3) What is Graph? Explain Graph representations.
   Ans. Graph Introduction
   Adjacency Matrix
   Adjacency List

4) What is Graph traversal. Explain Breadth First Search.
   Ans. Introduction of Graph traversal
   Breadth First Search
   Example

5) What is Graph traversal. Explain Depth First Search.
   Ans. Introduction of Graph traversal
   Depth First Search
   Example

6) Explain Kruskal algorithm. How does Kruskal's algorithm work?
   Ans. Kruskal algorithm
   How it works.

7) Explain Dijkstra's shortest path algorithm. Explain Minimum Spanning tree with an example.
   Ans. Dijkstra's shortest path algorithm
   Minimum spanning tree
   Example

8) What is graph representation? Create the Adjacency Matrix and Adjacency List from following graph.

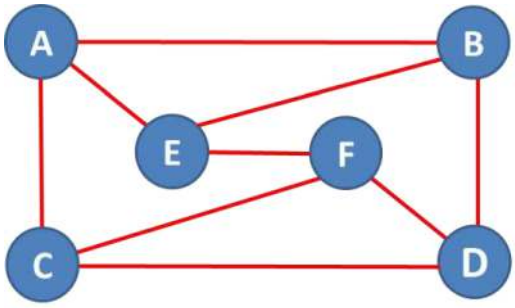

   Ans. About graph representation
   Adjacency Matric
   Adjacency List

Atmiya University Rajkot

Course Code	Course Title
18MCESCC201	**Design of Language Processor**

Introduction to Language Processors

1. What is a language processor, and why is it important in computer systems?
2. What is the difference between a compiler and an interpreter?
3. What is an assembler, and how does it work?
4. Define the term "syntax" in the context of programming languages.
5. What is a semantic error? How is it different from a syntax error?
6. Explain the phases of a compiler with a brief description of each phase.
7. What is the role of a lexical analyzer in a language processor?
8. How does a preprocessor differ from a compiler?

Lexical Analysis

9. What is the purpose of lexical analysis in a compiler?
10. Define a lexeme, token, and pattern in the context of lexical analysis.
11. What is the role of a symbol table during lexical analysis?
12. What are regular expressions, and how are they used in lexical analysis?
13. What is the significance of finite automata in lexical analysis?
14. What is a scanner generator like Lex, and how is it used?

Syntax Analysis

15. What is a syntax analyzer (parser) in a compiler?
16. What is a context-free grammar (CFG)?
17. What is the difference between top-down and bottom-up parsing?
18. Define the term "parse tree" and its significance.
19. What is a recursive descent parser, and how does it work?
20. Explain the concept of FIRST and FOLLOW sets in syntax analysis.
21. What is the role of tools like YACC (Yet Another Compiler-Compiler)?

Semantic Analysis

22. What is semantic analysis in the design of language processors?
23. How does type checking work in semantic analysis?

24. What is the purpose of an abstract syntax tree (AST)?
25. Explain the difference between dynamic and static semantics.

Intermediate Code Generation

26. Why is intermediate code used in the compilation process?
27. What are three-address codes (TAC), and how are they represented?
28. What is the role of syntax-directed translation in intermediate code generation?

Code Optimization and Code Generation

29. What is code optimization, and why is it essential?
30. What is the difference between machine-independent and machine-dependent code optimization?

Atmiya University
Rajkot

Course Code	Course Title
18MCESCC202	**Digital image processing**

Introduction to Digital Image Processing

1. What is digital image processing?
2. How is a digital image represented in a computer?
3. What is the difference between a grayscale image and a color image?
4. What is the significance of pixel resolution in images?
5. Explain the difference between spatial resolution and intensity resolution.
6. What are the main steps involved in digital image processing?

Image Acquisition and Sampling

7. What is image acquisition in digital image processing?
8. What is meant by sampling and quantization in images?
9. How does increasing the sampling rate affect image quality?
10. What is the Nyquist theorem, and how does it relate to image sampling?

Image Enhancement

11. What is image enhancement, and why is it used?
12. What is the difference between spatial domain and frequency domain enhancement techniques?
13. Explain histogram equalization and its purpose.
14. What is contrast stretching in image enhancement?
15. What is the role of smoothing filters in image processing?
16. What is a high-pass filter, and how is it used in image sharpening?

Image Restoration

17. What is the difference between image restoration and enhancement?
18. What is noise in digital images, and what are common types of noise?
19. Explain the purpose of a median filter in noise removal.
20. How does Wiener filtering work in image restoration?

Atmiya University
Rajkot

Color Image Processing

21. What are the different color models used in image processing (e.g., RGB, CMYK, HSV)?
22. What is the purpose of color space conversion in image processing?
23. Explain the concept of color quantization.

Image Compression

24. Why is image compression necessary?
25. What is the difference between lossless and lossy compression?
26. Name and briefly describe common image compression techniques (e.g., JPEG, PNG).

Morphological Image Processing

27. What is the purpose of morphological operations in image processing?
28. Define dilation and erosion in the context of morphological operations.
29. What are opening and closing operations, and how are they used?

Applications of Digital Image Processing

30. List some real-world applications of digital image processing in fields such as medical imaging, satellite imagery, or computer vision.

Course Code	Course Title
18MCESCC203	**Cyber forencics**

Introduction to Cyber Forensics

1. What is cyber forensics, and why is it important in cybersecurity?
2. What are the main goals of cyber forensics investigations?
3. Explain the difference between digital forensics and cyber forensics.
4. What are the key steps in a typical cyber forensics investigation?
5. What is the chain of custody, and why is it crucial in cyber forensics?
6. What role do cyber forensics professionals play in law enforcement?

Digital Evidence

7. What is digital evidence, and how is it collected?
8. What types of devices can be involved in a cyber forensics investigation?
9. What is the significance of metadata in cyber forensics?
10. What is the difference between volatile and non-volatile data in digital forensics?
11. How can evidence integrity be maintained during an investigation?

Tools and Techniques

12. What are some commonly used tools in cyber forensics?
13. What is disk imaging, and why is it important in forensics?
14. Explain the role of file carving in recovering deleted data.
15. What is hash value, and how is it used in verifying digital evidence?
16. What is forensic duplication, and how does it differ from regular data copying?

Digital Forensic Process

17. What is the process of acquiring digital evidence from a computer system?
18. How does data analysis play a role in cyber forensics?
19. What is the role of encryption in cyber forensics investigations?
20. How are digital traces of internet activity (such as browsing history) recovered in an investigation?
21. What is a forensic report, and what should it include?

Atmiya University
Rajkot

Cyber Crime and Forensics

22. What are some common types of cybercrime that cyber forensics professionals investigate?
23. How does cyber forensics help in cases of identity theft or fraud?
24. What is a "live" forensics investigation, and when is it necessary?
25. How are cyber forensics used in investigating hacking or data breaches?

Legal and Ethical Aspects

26. What are the legal considerations when conducting a cyber forensics investigation?
27. How does cyber forensics ensure the privacy of individuals during investigations?
28. What is the role of cyber forensics in gathering evidence for court cases?
29. What are the challenges related to international laws and jurisdiction in cyber forensics?
30. How does cyber forensics deal with encrypted data or secure communication systems in investigations?

Atmiya University
Rajkot

Course Code	Course Title
18MCESCC204	**Data Mining and Warehousing**

Introduction to Data Mining

1. What is data mining, and why is it important in data analysis?
2. What is the difference between data mining and traditional data analysis?
3. Define the term "knowledge discovery in databases" (KDD).
4. What are the main goals of data mining?
5. What are the primary types of data mining tasks (e.g., classification, clustering)?
6. What are the key challenges in data mining?
7. Explain the concept of a data mining model.
8. What is the difference between supervised and unsupervised learning in data mining?

Data Mining Techniques

9. What is classification in data mining, and how is it performed?
10. What is clustering, and how does it differ from classification?
11. What is regression analysis, and how is it used in data mining?
12. Explain the concept of association rule mining with an example.
13. What is anomaly detection, and how is it used in data mining?
14. What is decision tree analysis in data mining?
15. What is the purpose of support vector machines (SVM) in data mining?
16. What is the Apriori algorithm, and how does it work for association rule mining?

Data Preprocessing

17. What is data preprocessing, and why is it necessary in data mining?
18. What is data cleaning, and what are some common data quality issues?
19. What is normalization in data preprocessing, and why is it important?
20. What is feature selection, and how does it impact the performance of a data mining model?
21. What is dimensionality reduction, and how does PCA (Principal Component Analysis) help?

Introduction to Data Warehousing

22. What is a data warehouse, and how does it differ from a traditional database?
23. What are the key components of a data warehousing system?

Atmiya University Rajkot

24. Explain the concept of OLAP (Online Analytical Processing) and its role in data warehousing.
25. What is ETL (Extract, Transform, Load), and why is it important in data warehousing?
26. What is the difference between OLTP (Online Transaction Processing) and OLAP in terms of data processing?

Data Warehouse Architecture

27. What are the different levels of data warehouse architecture?
28. What is a star schema, and how is it used in a data warehouse design?
29. Explain the concept of a snowflake schema and how it differs from the star schema.
30. What is a fact table and a dimension table in the context of data warehousing?

Atmiya University
Rajkot

Course Code	Course Title
18MCESCC301	**Multicore Architecture**

ntroduction to Multicore Architecture

1. What is a multicore architecture, and how does it differ from single-core architecture?
2. What are the advantages of using multicore processors over single-core processors?
3. How does parallelism benefit from multicore architecture?
4. What is symmetric multiprocessing (SMP)?
5. What is asymmetric multiprocessing (AMP)?
6. Explain the concept of multicore processor design in terms of cores and threads.
7. How do cache structures differ in multicore architectures compared to single-core architectures?
8. What is the role of the memory hierarchy in multicore processors?

Performance and Parallelism

9. How does having multiple cores improve the performance of parallel applications?
10. What is thread-level parallelism (TLP) in multicore architecture?
11. How do superscalar architectures leverage multicore design?
12. Explain the concept of instruction-level parallelism (ILP) in the context of multicore processors.
13. What are the challenges associated with thread synchronization in multicore architectures?
14. How does multicore architecture help in reducing power consumption compared to single-core processors?

Cache and Memory in Multicore Architecture

15. How does cache coherence work in multicore systems?
16. What is the MESI protocol (Modified, Exclusive, Shared, Invalid) in the context of cache coherence?
17. How does multicore architecture handle memory consistency?
18. What is NUMA (Non-Uniform Memory Access) and how does it apply to multicore systems?
19. How does multicore architecture manage shared memory access compared to distributed memory systems?

Atmiya University
Rajkot

Programming and Software Considerations

20. How do programming languages and compilers adapt to multicore architectures?

Atmiya University
Rajkot

Course Code	Course Title
18MCESDA101	Numerical Methods & Discrete Mathematics for Computer Engineering

Numerical Methods

1. What is the purpose of numerical methods in computing?
2. Explain the difference between analytical and numerical solutions.
3. What is interpolation? Give an example.
4. What is numerical integration, and why is it used?
5. Describe the Trapezoidal Rule for integration.
6. What is the Simpson's Rule, and how does it improve accuracy in numerical integration?
7. Explain the difference between interpolation and extrapolation.
8. What is the Newton-Raphson method, and how is it used for root finding?
9. Define numerical differentiation.
10. What are finite differences, and how are they used in numerical methods?
11. What is the purpose of Gaussian elimination in solving linear equations?
12. What is a condition number, and why is it important in numerical computation?
13. Define the term "round-off error" and give an example.
14. What is an iterative method, and how does it differ from a direct method?
15. Explain the concept of convergence in numerical methods.
16. What is a numerical approximation, and when is it applied?
17. Describe the concept of floating-point representation.
18. What is LU decomposition, and how is it used in solving equations?
19. What is the Bisection Method for root-finding?
20. Explain how numerical methods are applied in computer engineering.

Discrete Mathematics

21. What is the importance of discrete mathematics in computer engineering?
22. Define a set and give an example of its application in computing.
23. What is a graph, and what are its components (vertices and edges)?
24. Explain the difference between a directed and an undirected graph.
25. What is a tree in graph theory, and where is it used in computer science?
26. Define Boolean algebra and its significance in computer engineering.
27. What is a truth table, and how is it used in logical expressions?
28. What is a combinatorial problem? Provide an example.
29. What is a permutation, and how is it different from a combination?
30. Explain the concept of a recurrence relation and its applications in algorithms.

Atmiya University Rajkot

Course Code	Course Title
18MCESDC301	**Deep Learning**

Introduction to Deep Learning

1. What is deep learning, and how does it differ from traditional machine learning?
2. What are neural networks, and how are they related to deep learning?
3. What is the main advantage of using deep learning over classical machine learning techniques?
4. What is a deep neural network (DNN)?
5. What are the key components of a neural network?
6. How does deep learning simulate the human brain?
7. What is the role of activation functions in deep learning models?
8. Explain the concept of a perceptron and its importance in deep learning.

Types of Neural Networks

9. What is the difference between a feedforward neural network and a recurrent neural network (RNN)?
10. What is a convolutional neural network (CNN), and how is it used in image processing?
11. What are long short-term memory (LSTM) networks, and how do they work?
12. What is a generative adversarial network (GAN), and what are its applications?
13. What is a deep belief network (DBN)?
14. How are autoencoders used in deep learning?

Training Deep Learning Models

15. What is backpropagation, and why is it important in training deep learning models?
16. What are the common activation functions used in neural networks (e.g., sigmoid, ReLU, tanh)?
17. What is gradient descent, and how does it work in optimizing neural networks?
18. What is the vanishing gradient problem, and how is it addressed in deep learning?
19. How does the learning rate affect the training of a deep learning model?
20. What are epochs, and how do they relate to model training?

Atmiya University
Rajkot

Optimization and Regularization

21. What is overfitting in deep learning, and how can it be prevented?
22. What are dropout and batch normalization, and how do they help improve deep learning models?
23. What is the purpose of a loss function in deep learning?
24. Explain the concept of weight initialization and its importance in neural networks.
25. What is the difference between stochastic gradient descent (SGD) and mini-batch gradient descent?

Applications of Deep Learning

26. What are the most common applications of deep learning in industry today?
27. How is deep learning used in natural language processing (NLP)?
28. What role does deep learning play in self-driving cars?
29. How is deep learning used in medical imaging and diagnosis?
30. What is reinforcement learning, and how does it relate to deep learning?

Course Code	Course Title
18MCESDC302	**IOT Technology &Application**

Introduction to IoT

1. What is the Internet of Things (IoT), and how does it work?
2. What are the key components of an IoT system?
3. How does IoT differ from traditional internet-based systems?
4. What are the benefits of IoT technology for industries and consumers?
5. What are some examples of everyday IoT devices?

IoT Architecture and Technologies

6. What are the layers in IoT architecture, and what role does each layer play?
7. How does the physical layer contribute to IoT functionality?
8. What is the role of the network layer in IoT systems?
9. What is the function of the application layer in IoT architecture?
10. How does cloud computing enhance IoT applications?
11. What is edge computing, and how does it complement IoT technologies?
12. What communication protocols are commonly used in IoT (e.g., MQTT, CoAP, HTTP)?
13. How does the concept of interoperability apply to IoT devices?

IoT Devices and Sensors

14. What are the types of sensors commonly used in IoT devices?
15. How do IoT devices collect and transmit data to the cloud or server?
16. What role do actuators play in IoT systems?
17. What is the difference between passive and active sensors in IoT?
18. How do GPS sensors work in IoT applications?

IoT Communication Networks

19. What is the difference between short-range and long-range communication protocols in IoT (e.g., Bluetooth vs. LoRa)?
20. How does Zigbee technology support IoT communication?
21. What is the significance of 5G networks for the future of IoT?
22. How does LPWAN (Low Power Wide Area Network) benefit IoT applications?

Atmiya University Rajkot

Security and Privacy in IoT

23. What are the main security concerns associated with IoT devices?
24. How do encryption and authentication protect IoT networks and data?
25. What are some strategies to mitigate IoT device vulnerabilities?
26. How do IoT devices manage data privacy, especially in sensitive applications like healthcare?

IoT Applications

27. How is IoT used in smart homes to improve automation and energy efficiency?
28. What are the key IoT applications in healthcare, such as wearable health monitors?
29. How is IoT transforming industries like manufacturing and agriculture (Industrial IoT)?
30. What role does IoT play in smart cities, such as traffic management and waste management?

Atmiya University
Rajkot

Atmiya University
Faculty of Engineering & Technology
Department of Mechanical Engineering
M.Tech. Mechanical Engineering

Advanced Casting Technology - QUESTION BANK

UNIT 1 **Introduction & Historical Development**

1. What is casting, and how would you define it in the context of material processing?
2. Can you explain the basic principles behind the casting process?
3. What are the key advantages of using casting as a manufacturing method?
4. How does casting differ from other metalworking processes such as forging and machining?
5. When and where did the practice of casting first originate in human history?
6. What were some of the earliest materials and techniques used in casting?
7. How did casting evolve over time, and what were the significant developments in different historical periods?
8. Who were some of the key figures or civilizations that contributed to the historical development of casting techniques?
9. How did the Industrial Revolution impact the casting industry, and what technological advancements were introduced during this period?
10. Can you discuss the role of casting in ancient cultures, such as ancient China, Greece, and Rome?
11. What were some challenges faced by early casting processes, and how were they addressed over time?
12. How did the Renaissance period influence the art and science of casting?
13. In what ways did the introduction of new materials and alloys impact the casting industry?
14. What role did the development of modern foundry techniques play in the industrialization of metal production?
15. How has casting technology continued to evolve in the 20th and 21st centuries?
16. Are there any notable innovations or breakthroughs in casting technology in recent decades?
17. How does investment casting differ from sand casting, and what are the advantages of each method?
18. Can you discuss the environmental impact of casting processes and any efforts to make them more sustainable?
19. How has the globalization of manufacturing affected the casting industry?
20. What are the current trends and future prospects for the casting industry?

UNIT 2 **Pattern, Mould and Core Design**

21. What is the role of a pattern in the casting process, and how does it influence the final product?
22. Can you explain the significance of pattern material selection in pattern design?
23. What are the key considerations in designing a pattern for a complex casting shape?
24. How does the size and shape of a pattern affect the casting process and the final product?
25. What are the common materials used in pattern construction, and how does their selection impact the casting process?
26. Can you discuss the importance of draft in pattern design and its impact on mold release?
27. What is the purpose of a mold in casting, and how does its design contribute to the overall process?
28. How do you determine the gating and risering system in mold design to ensure proper metal flow and solidification?
29. What are the different types of molding materials used in foundries, and how do they influence mold design?
30. What considerations are essential in designing a mold for high-temperature applications or specialized casting processes?
31. How does the design of cores contribute to the creation of internal features in a casting?
32. Can you explain the concept of core prints and their role in mold assembly?
33. What challenges are associated with designing molds for large-scale castings, and how are they addressed?
34. How does the design of a mold impact the overall casting cycle time and efficiency?
35. Can you discuss the importance of venting and cooling in mold design for preventing defects in the casting?
36. What role does computer-aided design (CAD) play in modern pattern, mold, and core design?
37. How has additive manufacturing and 3D printing influenced the design of patterns, molds, and cores in the casting industry?
38. Can you explain the concept of match plates in pattern and mold design and their advantages?
39. What are the considerations for designing molds and cores for different casting materials, such as ferrous and non-ferrous alloys?
40. How has sustainability been incorporated into pattern, mold, and core design practices in recent years?

UNIT 3 **Risering, Gating and Melting Practice**

Risering:

41. What is the purpose of risers in the casting process, and how do they contribute to reducing defects?
42. Can you explain the difference between open and blind risers and when each is used?

Atmiya University Rajkot

43. How does the size and shape of a riser affect its effectiveness in preventing shrinkage defects?
44. What factors influence the selection of the location for risers on a casting?
45. How do you determine the proper size of a riser for a specific casting job?
46. Can you discuss the concept of feeding distance and its importance in risering design?
47. What are the challenges associated with designing risers for thin-walled sections in a casting?

    Gating:
48. What is the purpose of the gating system in the casting process, and how does it impact metal flow?
49. How do you design a gating system to ensure proper filling of the mold cavity?
50. Can you explain the role of ingates and runners in the gating design?
51. What factors influence the selection of the gating system based on the casting material?
52. How does the design of the gating system impact the overall efficiency of the casting process?
53. Can you discuss the considerations for designing a multi-gate system in casting?

    Melting Practice:
54. What are the common methods used for melting metals in the foundry industry?
55. How does the melting process differ for ferrous and non-ferrous alloys?
56. What factors influence the choice of melting furnace type in a foundry?
57. Can you discuss the importance of temperature control in the melting process and its impact on casting quality?
58. How are alloying elements introduced and controlled during the melting of alloys?
59. What safety measures should be considered in the melting practice to prevent accidents and ensure worker well-being?
60. How has technology, such as induction melting or electric arc furnaces, influenced melting practices in the casting industry?

UNIT 4 **Science & Engineering of Solidification**

61. What is solidification, and how does it occur during the casting process?
62. Can you explain the significance of the solidification process in determining the final properties of a casting?
63. How do cooling rates influence the solidification structure of a casting?
64. What role does nucleation play in the initiation of solidification, and how is it controlled in casting?
65. Can you discuss the concept of dendritic growth during solidification and its impact on casting quality?
66. How does the cooling rate affect the formation of macroscopic and microscopic defects in a casting?
67. What are the different phases that can form during solidification, and how do they contribute to the overall microstructure?

Atmiya University Rajkot

68. How does alloy composition influence the solidification behavior and the resulting microstructure?
69. Can you explain the concept of eutectic reactions in the solidification of alloys?
70. What is the importance of grain refinement in controlling the properties of a cast material?
71. How do external factors such as mold material and temperature influence the solidification process?
72. Can you discuss the principles behind the use of chill molds to control solidification rates?
73. What role does inoculation play in modifying the solidification structure of a casting?
74. How do grain size and orientation impact the mechanical properties of a cast material?
75. Can you explain the concept of shrinkage porosity during solidification and methods to mitigate its effects?
76. How is computer modeling and simulation used in predicting and optimizing the solidification process in casting?
77. What challenges are associated with achieving uniform solidification in large or complex castings?
78. How does the design of gating and risering systems influence the solidification characteristics of a casting?
79. Can you discuss any recent advancements or innovations in the science and engineering of solidification in casting?
80. What considerations should be taken into account for directional solidification or controlled solidification techniques in specialized casting processes?

UNIT 5 **Inspection, Quality Control and Design Consideration in Metal Casting**

Inspection:

81. What is the importance of inspection in the metal casting process?
82. Can you describe the different types of inspections performed during various stages of casting production?
83. How are non-destructive testing methods applied in casting inspection?
84. What challenges are associated with inspecting complex or intricate castings?
85. How does dimensional inspection contribute to ensuring the accuracy of cast components?
86. Can you discuss the role of visual inspection in identifying surface defects in castings?
87. What are the common methods for detecting internal defects in castings, such as porosity or inclusions?
88. How has technology, such as digital imaging and 3D scanning, improved the inspection process in metal casting?

Quality Control:

Atmiya University Rajkot

89. What is the role of quality control in the metal casting industry?
90. How are quality control measures integrated into the casting process to ensure consistency and reliability?
91. Can you discuss the importance of process control in preventing defects during casting production?
92. What are the key factors considered in establishing quality standards for castings?
93. How does statistical process control (SPC) contribute to quality assurance in metal casting?
94. What are the challenges in implementing quality control measures for large-scale or mass production casting operations?
95. How is the quality of raw materials, such as alloys and molding sand, ensured in the casting process?
96. Can you explain the significance of traceability in quality control for cast components?
97. How are quality control practices adapted for specialized casting processes, such as investment casting or die casting?
98. What role does documentation play in maintaining and improving quality control standards in a foundry?

Design Consideration:

99. How does the design of a casting influence its manufacturability and ease of inspection?
100. What are the key design considerations to minimize defects and optimize the casting process?
101. Can you discuss the importance of tolerance and allowances in casting design?
102. How do material selection and alloy specifications impact the design of a casting?
103. What are the considerations for designing castings with complex geometries or thin-walled sections?
104. How can designers optimize the gating and risering system to improve casting quality?
105. Can you explain the role of simulation tools in evaluating and refining casting designs before production?

Atmiya University
Rajkot

ATMIYA UNIVERSITY,
YOGIDHAM GURUKUL,
RAJKOT

CIVIL ENGINEEERING DEPARTMENT
4th SEMESTER
18BTCICC404-GE II
Enroll. No. :

STUDENT NAME	
ENROLLMENT NO.	
SEMESTER	4th
CLASS	GX
BATCH	
SUBJECT CODE	18BTCICC404
SUBJECT NAME	**GEOTECHNICAL ENGINEERING II**

Sr. No.	TITLE	Page		Date of Start	Date of Completion	Initials of Staff
		From	To			
1	Assignment -1 Permeability, Seepage and Earth Pressure					
2	Assignment -2 Shear Strength of Soil and Stability of Slopes					
3	Assignment -3 Sub-soil investigation and Introduction to Geosynthetics					
4	Assignment -4 Bearing capacity of Shallow Foundation					
5	Assignment -5 Bearing capacity of Pile foundations					

Atmiya University

ATMIYA UNIVERSITY,
YOGIDHAM GURUKUL,
RAJKOT

CIVIL ENGINEEERING DEPARTMENT
4th SEMESTER
18BTCICC404-GE II
Enroll. No. :

BRANCH :	CIVIL ENGINEERING	DISPLAY DATE :	
BATCH :		SUBMISSION DATE:	

ASSIGNMENT 1 (Permeability, Seepage and Earth Pressure)

1. Write down short note on Darcy's law with sketch and explain in brief: Factorsaffecting the permeability of soil.

2. Write down short note on Laboratory permeability test (Constant Head Method)

3. A soil sample of height 60 mm and cross sectional area of 100 cm2 was subjected to falling head permeability test. In a time interval of 6 minutes, the head dropped from 60 cm to 35 cm. If the cross sectional area of the stand pipe is 2 cm2, compute the coefficient of permeability of the soil sample. If the same sample is subjected to a constant head of 20 cm, calculate the total quantity of water that will be collected after flowing through the sample.

4. Determine the average co-efficient of permeability in horizontal and vertical directions for a deposit consisting of three layers of thickness 5 m, 1 m and 2.5 m and having the co-efficient of permeability of 3 x 10-2 mm/sec, 3 x 10-5 mm/sec and 4 x 10-2 mm/sec, respectively.

5. Briefly explain the conditions of Active earth pressure, Passive earth pressure and Earth pressure at rest.

6. Explain and derive an equation for Active earth pressure for cohesion less as well as cohesive soil with pressure distribution diagram.

7. Discuss passive earth pressure theories for Dry and cohesion less soil and Cohesive soil

8. A retaining wall, 5 m. high, with vertical back, retains soil fill, the upper face of fill is horizontal. The back face of the wall is smooth. Determine the Rankine active earth pressure on the wall, (a) before the formation of crack and (b) after the formation of crack. Take C = 5 kN/m^2 , = 17.5 kN/m^3, and Angle of friction = 30°.

9. Discuss in detail Rehbann's graphical method for determination of earth pressure.

10. (A) A retaining wall of height 8.0 m has a horizontal sandy soil as a backfill (C=0.0, = 30, t = 18 kN/m^3). A surcharge of 50 kPa is acting over the backfill. Draw the active earth pressure distribution and calculate the total active thrust acting on the wall.

(B) A retaining wall of height 6.0 m has a horizontal backfill with C=30 kPa, = 20 & t = 20 kN/m^3. Compute the total passive thrust acting on the wall.

Atmiya University

ATMIYA UNIVERSITY,
YOGIDHAM GURUKUL,
RAJKOT

CIVIL ENGINEEERING DEPARTMENT
4th SEMESTER
18BTCICC404-GE II
Enroll. No. :

BRANCH :	CIVIL ENGINEERING	**DISPLAY DATE :**	
BATCH :		**SUBMISSION DATE:**	

ASSIGNMENT □2 (Shear Strength of Soil and Stability of Slopes)

1 Explain Mohr □Coulomb□s strength theory with different cases.

2 Discuss the UU, CU, and CD Tri-axial shear test conditions, illustrating their use by at least one field example.

3 A series of direct shear tests were conducted on a soil, each test was carried out till the sample failed. The following results were obtained.

SAMPLE NO.	NORMAL STRESS (kN/m2)	SHEAR STRESS (kN/m2)
1	15	18
2	30	25
3	45	32

Derive Shear strength parameters.

1. From mathematical calculation.
2. From Graphical method.

4 The following results were obtained from a series of consolidated un drained (CU) shear tests on a soil, in which the pore water pressure was not determined. Determine the cohesion and the angle of shearing resistance.

SAMPLE NO.	NORMAL STRESS(kN/m³)	DEVIATOR STRESS FAILURE (kN/m³)
1	100	600
2	30	25
3	45	32

5 What are different factors of safety used in the stability of slopes ? Discuss briefly. Explain stability number and its uses in detail.

6 How is a slope analysed using a Swedish circle method (method of slices)? Discuss the method and derive an expression for the factor of safety.

7 A long natural slope in C-□ soil is inclined at 12□to the horizontal. The water table is at the surface and seepage is parallel to the slope. If a plane slip has developed at a depth of 4.0 m, determine the factor of safety. Take C = 10 kPa, □ = 20□&$\gamma_{s,\ t}$= 20 kN/m^3.

8 Determine the maximum permissible angle for a slope in sandy soil with angle of internal friction (□) = 36º and cohesion (c) = 0 and bulk density (g) = 20kN/m^3 if (a) sand is dry (b) when waterlogged with steady seepage parallel to the surface. Assume factor of safety = 2.

9 A new canal is excavated to a depth of 5m below ground level through a soil having the following characteristics: c= 14kN/m^2, □=15°,e=0.8 and G=2.70. the slope of banks is 1in 1. Calculate the factor of safety with respect to cohesion when the canal runs full. If it is suddenly and completely emptied, what will be the factor of safety?

Atmiya University

ATMIYA UNIVERSITY, YOGIDHAM GURUKUL, RAJKOT

CIVIL ENGINEEERING DEPARTMENT
4th SEMESTER
18BTCICC404-GE II
Enroll. No. :

BRANCH :	CIVIL ENGINEERING	DISPLAY DATE :	
BATCH :		SUBMISSION DATE:	

ASSIGNMENT □3 (Sub-soil investigation and Introduction to Geosynthetics)

1 Discuss various types of shallow foundation with neat figures.

2 Write the purpose of foundation and Enlist various factors affecting bearing capacity.

3 Differentiate between shallow foundation and deep foundation

4 Discuss various types of soil samplers with neat sketch. Discuss the various factors affecting sample disturbance

5 What do you understand by site investigation? What are the different purposes for which site investigations are made?

6 Enlist methods of sub-soil exploration & explain any one method in detail.

7 Explain penetration tests and their outcomes

8 Describe salient features of a good sub soil investigation report.

9 Describe plate load test with neat sketches with its significance and How plate load test differs from the standard penetration test?

10 What is Geo-synthetics? Explain in detail various Types of geo-synthetics with their functions and uses.

Atmiya University

ATMIYA UNIVERSITY,
YOGIDHAM GURUKUL,
RAJKOT

CIVIL ENGINEEERING DEPARTMENT
4th SEMESTER
18BTCICC404-GE II
Enroll. No. :

BRANCH:	CIVIL ENGINEERING	**DISPLAY DATE :**	
BATCH:		**SUBMISSION DATE:**	

ASSIGNMENT □4 (Bearing capacity of Shallow Foundation)

1 Define: (1) Gross bearing capacity, (2) Ultimate bearing capacity (3) Safe bearing capacity, (4) Allowable bearing capacity and Explain effect of ground water table on safe bearing capacity of soil.

2 Explain Prandtal, Rankine□s and skempton□s theories.

3 A 2 m wide strip footing is founded at a depth of 1.5 m below the ground level in a homogeneous bed of sand , having the following properties: □= 36º, □= 18.5 kN/m3. Determine the ultimate, net ultimate and net safe bearing capacity of the footing. For □= 36º N_c= 60, N_q= 42,N_r= 47. Assume a factor of safety of 3.0 Use Terazaghi's analysis.

4 Calculate the minimum depth a foundation required to transmit a load of 50kN/m2 in a cohesion less soil having γ = 17 kN/m2 and ϕ =20o. Also calculate the bearing capacity if the depth adopted is 1.5m using Rankine□s formula.

5 Determine the depth at which a circular footing of 2 m diameter is provided with a factor of safety 3. It carries a safe load of 1600 kN. The soil properties are: □= 30º, □= 18 kN/m3,C = 10 kN/m2. For □= 30º N_c= 37.2,N_q= 22.5,N_r = 19.7. Use Terazaghi's analysis.

6 Determine the allowable gross load and the net allowable load for a square footing of 2 m side and with a depth of foundation of 1 m. Use Tarzaghi□s theory and assume local shear failure. Take factor of safety of 3. The soil at the site has □= 18 kN/m3, *c*□= 15 kN/m2 and □□= 25 □Take Nc□=14.8 ; Nq□= 5.6 ; N□□= 3.2

7 Calculate using Skemption□s equation, the ultimate bearing capacity of a square footing on the surface of standard having unconfined compressive strength of 60 kN/m2

ATMIYA UNIVERSITY,
YOGIDHAM GURUKUL,
RAJKOT

CIVIL ENGINEEERING DEPARTMENT
4th SEMESTER
18BTCICC404-GE II
Enroll. No. :

BRANCH :	CIVIL ENGINEERING	DISPLAY DATE :	
BATCH :		SUBMISSION DATE:	

ASSIGNMENT □5 (Bearing capacity of Pile foundations)

1. What is negative skin friction? In which condition, negative skin friction on a pile is developed? Explain with figure.

2. Classify the piles based on the method of installation.

3. What is group efficiency of piles? Enlist various methods for determining group efficiency of plies. Determine the efficiency of group of nine piles (3x3) by Field□s rule.

4. Write dynamic formulae to estimate pile capacity. What are the limitations of dynamic formula?

5. Enlist various pile driving hammers & explain any one in detail.

6. Explain the pile load test to determine the ultimate load carrying capacity of pile.

7. A group of 16 piles of 50 cm diameter is arranged with centre to centre spacing of 1 m. The piles are 9 m long and are embedded in soft clay with cohesion 30 kN/m2. Bearing resistance may be neglected for the piles. Adhesion factor is 0.6. Determine the ultimate load capacity of the pile group.

8. A group of 12 piles each having a diameter of 500 mm and 30 m long, supports a raft foundation. The piles are arranged in 3 rows and spaced at 1.25 m c/c. The properties of foundation soils are □= 0º, □= 11 kN/m3,unconfined compressive strength = 75 kN/m2. Assuming □= 0.80 and factor of safety = 2.5, determine the capacity of pile group.

9. A square group of 9 piles was driven into soft clay extending to a large depth. The diameter and length of piles were 30 cm and 9 m respectively. If the unconfined compression strength of the clay is 90 kN/m2, and the pile spacing is 90 cm centre to centre, what is the capacity of the group? Assume the factor of safety of 2.5 and adhesion factor of 0.75

10. An RCC pile of 18 m overall length is driven into a deep stratum of soft clay having an unconfined compressive strength of 35 kN/m2.The diameter of pile is 30 cm. Determine the safe load that can be carried by the pile with a factor of safety = 3. □= 0.95

Atmiya University

ATMIYA UNIVERSITY, YOGIDHAM GURUKUL, RAJKOT

Civil Engineering Department
4th Semester :- Geotechnical Engineering II
Question Bank

1. Write down short note on Darcy's law with sketch and explain in brief: Factors affecting the permeability of soil.

2. Write down short note on Laboratory permeability test (Constant Head Method)

3. Explain flow net, Characteristics of flow net, Application of flow net.

4. A soil sample of height 60 mm and cross sectional area of 100 cm2 was subjected to falling head permeability test. In a time interval of 6 minutes, the head dropped from 60 cm to 35 cm. If the cross sectional area of the stand pipe is 2 cm2, compute the coefficient of permeability of the soil sample. If the same sample is subjected to a constant head of 20 cm, calculate the total quantity of water that will be collected after flowing through the sample.

5. Determine the average co-efficient of permeability in horizontal and vertical directions for a deposit consisting of three layers of thickness 5 m, 1 m and 2.5 m and having the co-efficient of permeability of 3 x 10-2 mm/sec, 3 x 10-5 mm/sec and 4 x 10-2 mm/sec, respectively.

6. Briefly explain the conditions of Active earth pressure, Passive earth pressure and Earth pressure at rest.

7. Explain and derive an equation for Active earth pressure for cohesion less as well as cohesive soil with pressure distribution diagram.

8. Discuss passive earth pressure theories for Dry and cohesion less soil and Cohesive soil

9. A retaining wall, 5 m. high, with vertical back, retains soil fill, the upper face of fill is horizontal. The back face of the wall is smooth. Determine the Rankine active earth pressure on the wall, (a) before the formation of crack and (b) after the formation of crack. Take C = 5 kN/m^2 , γ = 17.5 kN/m^3, and Angle of friction = 30°.

10. Discuss in detail Rehbann's graphical method for determination of earth pressure.

11. (A) A retaining wall of height 8.0 m has a horizontal sandy soil as a backfill (C=0.0, Φ = 30°, γt = 18 kN/m^3). A surcharge of 50 kPa is acting over the backfill. Draw the active earth pressure distribution and calculate the total active thrust acting on the wall.

(B) A retaining wall of height 6.0 m has a horizontal backfill with C=30 kPa, Φ = 20° & γt = 20 kN/m^3. Compute the total passive thrust acting on the wall.

12. Explain Mohr – Coulomb's strength theory with different cases.

13. Discuss the UU, CU, and CD Tri-axial shear test conditions, illustrating their use by at least one field example.

14. A series of direct shear tests were conducted on a soil, each test was carried out till the sample failed. The following results were obtained.

SAMPLE NO.	NORMAL STRESS (kN/m2)	SHEAR STRESS (kN/m2)
1	15	18
2	30	25
3	45	32

Derive Shear strength parameters.

1. From mathematical calculation.
2. From Graphical method.

15. The following results were obtained from a series of consolidated un drained (CU) shear tests on a soil, in which the pore water pressure was not determined. Determine the cohesion and the angle of shearing resistance.

SAMPLE NO.	NORMAL STRESS (kN/m³)	DEVIATOR STRESS FAILURE (kN/m³)
1	100	600
2	30	25
3	45	32

16. What are different factors of safety used in the stability of slopes ? Discuss briefly. Explain stability number and its uses in detail.

17. How is a slope analysed using a Swedish circle method (method of slices)? Discuss the method and derive an expression for the factor of safety.

18. A long natural slope in C-Φ soil is inclined at 12˚ to the horizontal. The water table is at the surface and seepage is parallel to the slope. If a plane slip has developed at a depth of 4.0 m, determine the factor of safety. Take C = 10 kPa, Φ = 20˚& γ_{sat}= 20 kN/m^3.

19. Determine the maximum permissible angle for a slope in sandy soil with angle of internal friction (ϕ) = 36º and cohesion (c) = 0 and bulk density (g) = 20 kN/m^3 if (a) sand is dry (b) when waterlogged with steady seepage parallel to the surface. Assume factor of safety = 2.

20. A new canal is excavated to a depth of 5m below ground level through a soil having the following characteristics: c= 14 kN/m^2, ϕ=15°,e=0.8 and G=2.70. the slope of banks is 1in 1. Calculate the factor of safety with respect to cohesion when the canal runs full. If it is suddenly and completely emptied, what will be the factor of safety?

21. Write the purpose of foundation and Enlist various factors affecting bearing capacity.

22. Differentiate between shallow foundation and deep foundation

23. Discuss various types of soil samplers with neat sketch. Discuss the various factors affecting sample disturbance

24. What do you understand by site investigation? What are the different purposes for which site investigations are made?

Atmiya University Rajkot

25. Enlist methods of sub-soil exploration & explain any one method in detail.

26. Explain in detail various uses of geo-synthetics.

27. List various types of geo-synthetics with their functions.

28. Define: (1) Gross bearing capacity, (2) Ultimate bearing capacity (3) Safe bearing capacity, (4) Allowable bearing capacity and Explain effect of ground water table on safe bearing capacity of soil.

29. Explain Prandtal, Rankine's and skempton's theories.

30. A 2 m wide strip footing is founded at a depth of 1.5 m below the ground level in a homogeneous bed of sand , having the following properties: $\Phi = 36^o$, $\gamma = 18.5$ kN/m^3. Determine the ultimate, net ultimate and net safe bearing capacity of the footing. For $\Phi = 36^o$ $N_c = 60$, $N_q = 42$, $N_r = 47$. Assume a factor of safety of 3.0 Use Terazaghi's analysis.

31. Calculate the minimum depth a foundation required to transmit a load of 50kN/m^2 in a cohesion less soil having $\gamma = 17$ kN/m^2 and $\phi = 20^o$. Also calculate the bearing capacity if the depth adopted is 1.5m using Rankine's formula.

32. Determine the depth at which a circular footing of 2 m diameter is provided with a factor of safety 3. It carries a safe load of 1600 kN. The soil properties are: $\Phi = 30^o$, $\gamma = 18$ kN/m^3, $C = 10$ kN/m^2. For $\Phi = 30^o$ $N_c = 37.2$, $N_q = 22.5$, $N_r = 19.7$. Use Terazaghi's analysis.

33. Determine the allowable gross load and the net allowable load for a square footing of 2 m side and with a depth of foundation of 1 m. Use Tarzaghi's theory and assume local shear failure. Take factor of safety of 3. The soil at the site has $\gamma = 18$ kN/m^3, $c' = 15$ kN/m^2 and $\emptyset' = 25^\circ$. Take $N_c' = 14.8$; $N_q' = 5.6$; $N_{\gamma}' = 3.2$

34. Calculate using Skemption's equation, the ultimate bearing capacity of a square footing on the surface of standard having unconfined compressive strength of 60 kN/m^2

35. What is negative skin friction? In which condition, negative skin friction on a pile is developed? Explain with figure.

36. Classify the piles based on the method of installation.

37. What is group efficiency of piles? Enlist various methods for determining group efficiency of plies. Determine the efficiency of group of nine piles (3x3) by Field's rule.

38. A group of 16 piles of 50 cm diameter is arranged with centre to centre spacing of 1 m. The piles are 9 m long and are embedded in soft clay with cohesion 30 kN/m^2. Bearing resistance may be neglected for the piles. Adhesion factor is 0.6. Determine the ultimate load capacity of the pile group.

39. A group of 12 piles each having a diameter of 500 mm and 30 m long, supports a raft foundation. The piles are arranged in 3 rows and spaced at 1.25 m c/c. The properties of foundation soils are $\Phi = 0^o$, $\gamma = 11$ kN/m^3, unconfined compressive strength = 75 kN/m^2. Assuming $\alpha = 0.80$ and factor of safety = 2.5, determine the capacity of pile group.

40. A square group of 9 piles was driven into soft clay extending to a large depth. The diameter and

Atmiya University Rajkot

length of piles were 30 cm and 9 m respectively. If the unconfined compression strength of the clay is 90 kN/m2, and the pile spacing is 90 cm centre to centre, what is the capacity of the group? Assume the factor of safety of 2.5 and adhesion factor of 0.75

41. An RCC pile of 18 m overall length is driven into a deep stratum of soft clay having an unconfined compressive strength of 35 kN/m2.The diameter of pile is 30 cm. Determine the safe load that can be carried by the pile with a factor of safety = 3. $\alpha = 0.95$

Atmiya University Rajkot

ATMIYA UNIVERSITY, RAJKOT
CIVIL ENGINEERING DEPARTMENT

GEOTECHNICAL ENGINEERING – I
QUESTION BANK

1 What is the scope and limitations of Geotechnics in the field of civil engineering?

2 What is soil according to civil engineering? Explain "Geological and Rock cycle" and type of soil based on its formation and its transportation method.
Also Define:
(i) Black cotton soil (ii) Gravel, sand, silt and clay (iii) Bentonite (iv) Loam (v) Loess (vi) Peat

3 Define specific gravity and void ratio and establish relation between saturated density, specific gravity, Degree of saturation, void ratio and density of water.

4 The mass of moist soil is 20 kg and its volume is 0.011m3. After drying in an oven the mass reduces to 16.5 kg. Determine the water content, the density of moist soil, the dry density, void ratio, porosity, and degree of saturation

5 If the bulk unit weight of a wet soil mass is 19.80 kN/m^3, find dry density, void ratio and degree of saturation of soil mass. Consider water content is 12%.

6 Derive the Following Relationship
(1) Water content (w), Void ratio (e), Degree of Saturation (S), Specific gravity of soil solids (G_s)
(2) Void ratio (e) & Porosity (n) and Vice-versa
(3) Dry Unit Weight (γ_d), Bulk Unit Weight (γ_b) and Water Content.

7 What is particle size distribution of soil? Discuss various type of soil based on particle size.

8 What is grading? Explain type of soil based on grading from particle size distribution curve. Enlist uses of particle size distribution curve.

9 Explain grain size distribution by sieve analysis. Define Uniformity coefficient and Coefficient of Curvature with formula.

10 What are the various shape of soil particles? Explain Sphericity, Flatness, Elongation and Angularity.

11 Discuss texture and structure of soil.

12 What is atterberg's Limit? State and Explain different consistency limits from graph.

13 Explain Various indices used in consistency of soil. State uses of consistency limits.

14 What is Activity, Sensitivity and Thixotropy of soil? Explain.

Atmiya University Rajkot

15 What are the Purposes of soil classification?

16 List the various soil classification system and explain I.S. Classification system for soil

17 The liquid limit of a soil is 62 % and its plastic limit is 34 %. Classify the soil as per IS Classification.

18 Sieve analysis was conducted on a sample of coarse grained Soil and the following results were obtained : a. Gravel = 12 %, b. Sand = 88 % c. D10 = 0.16 mm d. D30 = 0.64 mm
e. D60 = 1.22 mm. Classify the soil as per Unified soil Classification system

19 Differentiate between Compaction and Consolidation.

20 Explain Effect of Compaction on soil Properties.

21 Discuss Factors affecting Compaction.

22 The following data were recorded while performing the compaction test:-

Water content (%):	**7.71**	**11.5**	**14.6**	**17.50**	**19.50**	**21.25**
Bulk density (kN/m3):	**17.55**	**19.50**	**21.00**	**20.55**	**20.30**	**19.80**

Plot the MDD-OMC curve and obtain the optimum water content and maximum dry density. Also plot zero air voids curve. Take G = 2.66

23 A lab compaction test on soil having G=2.7 gave MDD of 1.82 gm/cc and a water content 17%. Determine the degree of saturation, air content and percentage of air voids at the max. Dry Density. What would be the theoretical maximum dry density corresponding to zero air voids at the OMC ?

24 Explain Terzaghi's Spring Analogy concept for consolidation.

25 What is the coefficient of consolidation? Discuss the Square root time fitting method and Logarithm of time fitting method to determine its value, step-by-step.

26 During consolidation test, the void ratio decreases from 0.80 to 0.50 under the stress increment of 0.5 kg/cm^2 to *1.5* kg/ cm^2. Compute compression Index, coefficient of compressibility & coefficient of volume compressibility

27 A clay Layer whose total settlement under a given loading is expected to be 25cm settles 10cm at

Atmiya University Rajkot

the end of 4 month after the application of load increment. Assume Single drainage.

(i) How many months will be required to reach a settlement of 20cm?
(ii) How much settlement will occur in 16 months?

28 Explain the term "Stress Distribution" with respect to soil. Derive the relation for vertical stress at any point due to a given point load using Boussinesq's theory and Point out the differences between Boussinesq's and Westergard's theories.

29 A square footing 2m × 2m carries a uniformly distributed load of 314 kN/m^2 find the intensity of vertical pressure at a depth of 6m below a point 0.5 m inside each of the two adjacent side of footing.

30 A water tank is supported by a ring foundation having outer diameter of 10 m and inner diameter of 7.5 m. The ring foundation transmits uniform load intensity of 160 kN/m^2.Compute the vertical stress induced at a depth of 4m,below the center of ring foundation using (1) Boussinesq's Analysis (2)Westergaard's Analysis (take μ =0)

Atmiya University Rajkot

ATMIYA UNIVERSITY, RAJKOT
Computer Engineering Department

B.Tech. SEM.-III
Subject: Database Management System(18BTCECC301)
Question Bank

Unit: 1

Sr. No.	Question	Mark
1	Explain responsibility of DBA in detail.	4
2	Explain three level Data abstraction.	4
3	Explain Different types of Keys in DBMS with examples.	4
4	Explain Specialization, Generalization and Aggregation with diagrams.	7
5	Explain advantages of DBMS over file management systems.	7
6	Explain Weak entity set and Strong entity set.	4
7	Explain disadvantages of the file system compared to the Database management system.	7
8	Explain applications of DBMS	4
9	Explain Data Models in brief.	4

Atmiya University

Unit: 2

Sr. No.	Question	Mark
1	What is Relational Algebra? Explain selection, Projection and Cartesian product operation.	5
2	What is normalization? What is the need of it? Also Explain 1NF,2NF and 3NF with examples.	7
3	Define functional dependency. Explain different types of FD with the help of example.	7
4	What Is decomposition? Explain different types of decomposition.	7
5	Describe Structure of relational databases.	5
6	Explain closure of FD set	5

Atmiya University

Unit: 3

<table>
<tr><th>Sr. No.</th><th>Question</th><th>Mark</th></tr>
<tr><td>1</td><td>Explain State Transition Diagram.</td><td>5</td></tr>
<tr><td>2</td><td>Define Locking. Explain lock-based protocol.</td><td>7</td></tr>
<tr><td>3</td><td>Find out the following schedule is Conflict Serializable or not. And also describe its steps.
<table>
<tr><td>T1</td><td>T2</td></tr>
<tr><td>R(A)</td><td></td></tr>
<tr><td></td><td>R(A)</td></tr>
<tr><td></td><td>R(B)</td></tr>
<tr><td></td><td>W(B)</td></tr>
<tr><td>R(B)</td><td></td></tr>
<tr><td>W(A)</td><td></td></tr>
</table></td><td>5</td></tr>
<tr><td>4</td><td>What is a transaction? List and explain ACID property of transaction with example.</td><td>5</td></tr>
<tr><td>5</td><td>Explain conflict serializability and view serializability with Example.</td><td>7</td></tr>
<tr><td>6</td><td>What are the three problems due to concurrency? How the problems can be avoided.</td><td>5</td></tr>
</table>

Atmiya University

Unit: 4

Sr. No.	Question	Mark
1	Explain system recovery procedure with Checkpoint record concept.	7
2	Explain Shadow Paging Technique.	5
3	Explain working of two-phase commit protocol.	5
4	Explain Query Processing in detail.	7
5	Explain Deferred Database Modification log-based recovery method.	7
6	Discuss Immediate Database Modification log based recovery method.	7
7	What is a deadlock? Explain wait-for-graph. When does it occur?	7
8	Explain deadlock Detection, Recovery and prevention methods.	7

Atmiya University

Unit: 5

Sr. No.	Question	Mark
1	What are SQL Constraints? And also explain its types.	5
2	Explain TCL Commands with syntax and examples.	5
3	Explain Aggregate Functions with syntax and examples.	5
4	Explain Order by, group by and Having with syntax and example.	7
5	Explain Numeric and String Functions.	5
6	Explain View and its types with syntax and examples.	7
7	What is Join? Define its types. And explain Inner join in detail.	7

Atmiya University

Digital Electronics(21BTCEIC301)

Questions Bank

For 1marks

	UNIT-1
1	Convert $(102)_{10}$ into ($)_2$.
2	Convert $(1001)_2$ into ($)_{10}$.
3	Convert $(56)_8$ into($)_2$.
4	Convert $(2A)_{16}$ into ($)_2$.
5	$(15)_{10}$–$(10)_{10}$ using 1's compliment.
6	$(15)_{10}$–$(10)_{10}$ using2's compliment.
7	$(10)_{10}$–$(15)_{10}$ using1's compliment.
8	$(10)_{10}$–$(15)_{10}$ using2's compliment.
9	$(101101)_2$to greycode.
10	(1011101) grey to binary.
	UNIT-2
11	Implement Not gate using NAND gate.
12	Implement AND gate using NAND gate.
13	Implement OR gate using NAND gate.
14	Implement Not gate using NOR gate.
15	Implement AND gate using NOR gate.
16	Implement OR gate using NOR gate.
17	Reduce Boolean function---- y=A'+AB
18	Reduce Boolean function---- y=A+A'B
19	What is SOP?
20	What is POS?
	UNIT-3
21	What is combination circuit.
22	What half adder.
23	What is full adder?
24	What is half subtractor.
25	What is full subtractor.
26	What is MUX?
27	What is De-mux?
28	What is encoder?
29	What is decoder?

Atmiya University

30	What is priority encoder?
UNIT-4	
31	What is sequential circuit.
32	What is SR flip-Flop?
33	What is Dflip-Flop?
34	What is JKflip-Flop?
35	What is Tflip-Flop?
36	What is synchronous counter?
37	Give difference between synchronous counter and Asynchronous counter.
38	What is Asynchronous counter?
39	What is registor?
40	What is flip-flop.
UNIT-5	
41	What is logicfamilies?
42	Explain various terminology used for logic families.
43	What is ECL?
44	What is TTL?
45	What is CMOS?
46	What noise?
47	What noise margin?
48	What noise immunity?
49	What is propagation delay?
50	What is power dissipation?

DigitalElectronicsQuestions Bank

	UNIT-1	Marks
1	Different types of number system conversion.	4
2	Miscellaneous example of number system.	4
3	What is radix for number system ?Derive number system for r=11.	4
4	Explain1's compliment.	4
5	Explain2's compliment.	4
6	Exampleof1's compliment.	7
7	Exampleof2's compliment.	7

Atmiya University

8	Explain various binary codes.	7
9	Explain binary to gray conversion.	7
10	Explain gray to binary conversion.	7
	UNIT-2	
11	Explain NAND as universal gate.	4
12	Explain NOR as universal gate.	4
13	Various circuit implementations using NAND gate.	4
14	Various circuit implementations using NOR gate.	4
15	Explain various law for Boolean algebra.	4
16	Explain de'morgan' srule.	7
17	Various example on Boolean algebra.	7
18	ExplainK-mapfor5varible.	7
19	Example of K-map for SOP form.	7
20	Example of K-map for POS form.	7
	UNIT-3	
21	What is combination circuit.	4
22	Various circuit implementation of combinational circuit.	4
23	Explain half adder.	4
24	Explain half subtractor.	4
25	Explain full adder.	4
26	Explain full subtractor.	7
27	Explain MUX of various types.	7
28	Explain De-MUX of various types.	7
29	Explain Encoder of various types.	7
30	Explain Decoder.	7
	UNIT-4	
31	What is sequential circuit.	4
32	Explain SR flip-Flop.	4
33	Explain Dflip-Flop.	4
34	Explain JKflip-Flop.	4
35	Explain Tflip-Flop.	4
36	Explain synchronous up counter.	7
37	Explain synchronous down counter.	7
38	Explain Asynchronous up counter.	7
39	Explain Asynchronous down counter.	7
40	Explain varioustype of register.	7
	UNIT-5	
41	Explain logic families.	4

Atmiya University

42	Explain various terminology used for logic families.	4
43	Explain ECL families in detail.	4
44	Explain TTL families in detail.	4
45	Explain CMOS families in detail.	4
46	Compare ECL ,TTL ,CMOS logic families.	7
47	Explain limitation of ECL logic families.	7
48	Explain limitation of TTL logic families.	7
49	Explain limitation of ECL logic families.	7
50	Explain future and scope of logic families.	7

Atmiya University

Atmiya University, Rajkot

Department of Mechanical Engineering

Subject:- Computer Aided Manufacturing (18BTMECC706)

Semester – VII
IMPORTANT QUESTION

1. Differentiate between NC/CNC and DNC and Classify CNC Machine.
2. What is CIM? Discuss the components of CIM. Also state potential benefits of CIM.
3. Explain various types of tape readers with sketches used in NC machines.
4. Explain why recirculating ball screws are used in NC/CNC machine tools
5. Explain in detail the Adaptive control system.
6. "CNC Machining center is considered to be a highly productive machine" Give your Justification.
7. Give Complete Classification of CNC Machine used for industries.
8. Discuss with a neat sketch open loop control system and close loop control system used in CNC machines.
9. Describe absolute and incremental programming systems with a neat sketch.
10. Explain why automation is required in today's industries.
11. Write a short note on Automated Guided Vehicles associated with FMS. OR
12. What is an AGV?
13. Describe with sketch ASRS. OR Explain with neat sketch AS/RS system used in FMS.
14. What are different types of AGVs? What are the benefits of using AGVs?
15. Write full form of AGV.
16. What do you mean by ASRS
17. What is group technology? Explain opitz classification and coding system in brief.
18. What is part classification and coding required in GT. Explain OPTIZ system of coding .
19. What is Group Technology? What are the advantages of GT in manufacturing?
20. Explain following with reference to Group Technology:(i) Coding structures in GT (ii) Composite part
21. Explain the inputs of MRP system in brief.
22. Distinguish between variant and generative type CAPP stating their advantages.
23. Explain the variant type CAPP system. State the benefits and limitations of variant type CAPP systems.

Atmiya University Rajkot

24. What are the major functions of process planning? What are the main problems associated With manual process planning?
25. Explain with neat diagram retrieval type CAPP.
26. Explain with neat diagram generative type CAPP.
27. Explain in detail composite part.
28. Write short note on JIT
29. Elaborate in detail Axes identification of CNC Turning and Milling centre along with appropriate sketch.
30. Discuss about different ISO code used for manual part programming, and explain any 5 G-Code with figures.
31. Explain different programming format and structure used in manual part programming.
32. Explain do loops, canned cycles and parametric sub routines used in CNC programming with suitable example proper diagram.
33. What is FMS? List different flexibilities associated with FMS and explain any two in brief.
34. Explain the types of flexibilities in FMS and discuss the factors on which these flexibilities depend.
35. Write a short note on Automated Guided Vehicles associated with FMS. OR What is an AGV?
36. What are different types of AGVs? What are the benefits of using AGVs?
37. Describe with sketch ASRS. OR Explain with a neat sketch AS/RS system used in FMS.
38. Enlist benefits of flexible manufacturing system.
39. What are the input parameters in MRP-I? What is the difference between MRP-I & MRP-II ?
40. Write a part program using G' and M codes for finishing a forged component as shown in Figure 1. Calculate the speed and feed on the turning center.

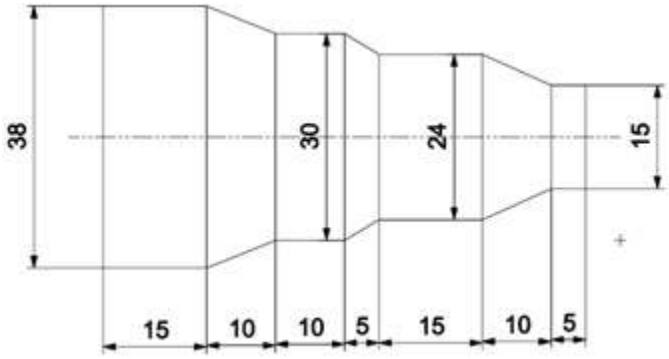

Assume suitable data if necessary.

Atmiya University
Rajkot

41. 25. Construct a manual part program for the component shown in figure 2. Assume the raw product as carbon steel.

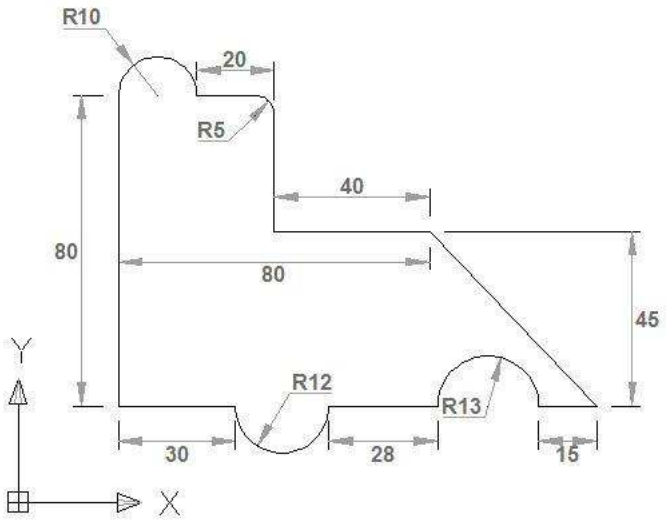

Calculate Feed and RPM having cutter diameter as 12 mm and No. of Insert as 4.

42. Explain in detail Adoptive control system.
43. Explain in detail the Adaptive control system.
44. "CNC Machining center is considered to be a highly productive machine" Give your Justification.
45. Give Complete Classification of CNC Machine used for industries.
46. Discuss with a neat sketch open loop control system and close loop control system used in CNC machines.
47. Describe absolute and incremental programming systems with a neat sketch.
48. Explain why automation is required in today's industries.
49. Write a short note on Automated Guided Vehicles associated with FMS. OR
50. What is an AGV?
51. Describe with sketch ASRS. OR Explain with neat sketch AS/RS system used in FMS.
52. What are different types of AGVs? What are the benefits of using AGVs?
53. Write full form of AGV.
54. What do you mean by ASRS
55. What is group technology? Explain opitz classification and coding system in brief.
56. What is part classification and coding required in GT. Explain OPTIZ system of coding .

Atmiya University Rajkot

57. What is Group Technology? What are the advantages of GT in manufacturing?
58. Enlist benefits of flexible manufacturing system.
59. What are the input parameters in MRP-I?
60. What is the difference between MRP-I & MRP-II ?

Atmiya University
Rajkot

18BTMECC501- PRODUCTION TECHNOLOGY

IMPORTATNT QUESTION

All Units

Unit- 1 Theory of Metal Cutting and thermal aspect in Machining

1. Explain in detail different tool materials used in metal cutting process
2. Determine shear angle in the sketch and also derive its equation .: tan θ = r cos α / (1 - r sin α)
3. The following Equation for tool life is given for a turning operation:
   $V\ T$^0.13 f^0.77d^0.37 = C
   A 60 minute tool life was obtained while cutting at V = 30 m/min, f = 0.3 mm/rev and d = 2.5 mm.
   Determine the change in tool life if cutting speed, feed and depth of cut are increased by 20% individually and also taken together.
4. During an orthogonal machining (turning) operation of c – 40 steel the following data were obtained:

i. Chip thickness = 0.45 mm
ii. Width of cut = 2.5 mm
iii. Feed = 0.25 mm/rev
iv. Tangential cut force = 1130 N
v. Feed Thrust Force = 295 N
vi. Cutting Speed = 2.5 m/s
vii. Rake Angle = 10°

5. Calculate (a) Force of shear at the shear plane (b) kinetic coefficient of friction at the chip tool surface.
6. Explain types of chips that occur in metal cutting. Why a built up edge on a tool is undesirable and also explain the reason behind various chip formation.
7. Explain tool designation with suitable figures and notations of angles.
8. List down the machining processes where “Multi Point Cutting Tool” is used.

9. What does the fourth digit indicate in the tool signature given below? 0-7-6-8-15-16-0.8
10. Define : Relief Angle, Rake Angle and Shear Angle observed during metal Cutting process.
11. Explain with a neat sketch Orthogonal and Oblique cutting process.

Unit-2 Jigs & Fixture

1. What is 3-2-1 Principle? Explain with complete Geometry
2. Define Jig & Fixture
3. Explain Starch Clamp in detail.
4. Explain about Rest Pin and Support pin.
5. What are the different types of Jigs are available? Explain any Two in details.
6. What is 3-2-1 Principle? Explain with complete Geometry
7. Explain following Jigs with neat sketch 1). Plate Jig 2).Channel Jig 3). Diameter Jig 4). Sandwich Jig 6). Pot Jig
8. Enlist Type of Fixture & Explain any two in brief.
9. List the various type of Locating Device
10. What are the essential feature of Milling Fixture
11. Explain Design principal of Jigs & Fixture
12. What is the Different type of jig bushes used?

Unit-3 PRESS TOOLS

1. What are the applications of press work? How does press work differs from machining?
2. How the presses are classified? Sketch and describe any one of it.
3. Explain the following press working operation (i) Blanking (ii) Piercing (iii) Notching (iv) Nibbling (v)Lancing
4. State the advantages of press machine.
5. Define following press working terminology :
   1). Bed 2). Bolster plate 3). Die shoe 4). Die block 5). Punch 6). Stripper 7). Punch holder 8). Pressure plate.
6. Difference between piercing & blanking operation.
7. Write in detail the method of reducing cutting force in press working.
8. Give Differences: Piercing & Blanking.

Atmiya University Rajkot

9. Write in detail the method of reducing cutting force in press working .
10. List the forming operation perform on press. Explain Any Two in Brief with Neat Sketch

Unit-4 Non-Conventional Machining Process

1. Comparison between conventional and non-conventional machining process.
2. Classify various Non-conventional machining processes.
3. Explain the basic principal of EDM process. Also discuss the characteristics of various materials that are used for EDM tool.
4. What is LASER? Explain LBM.
5. Explain Laser Beam Machining process in detail. Describe Ultrasonic Machine (USM) with neat sketch.
6. Describe Water Jet Machining process with the help of neat sketch. State its advantages and application
7. What is LASER? Explain LBM
8. Explain The Advantages of EBM
9. Classify various non-conventional machining process

Unit-5 PLASTIC TECHNOLOGY

1. What is POLYMERIZATION?
2. What is Monomer?
3. Define Homo polymer & copolymer
4. List the Characteristics of polymer
5. List the Characteristics of Thermo plastic polymer & Thermosetting polymer
6. Write short note on Injection moulding process with neat sketch.
7. Explain with neat sketch Blow Moulding Process.
8. What are the advantages, Disadvantages and application of Injection Moulding Process
9. Explain with neat sketch Pressure Forming process with Advantages
10. Explain with neat sketch Vacuum Forming process with Advantages

Atmiya University Rajkot

Course Code	Course Title
18MCESCC101	**Cryptography & network security**

Basic Concepts

1. What is cryptography, and why is it important in network security?
2. Define the difference between symmetric and asymmetric cryptography.
3. What are plaintext and ciphertext?
4. What is encryption and decryption?
5. What is a cryptographic key?
6. What is the purpose of hashing in cryptography?
7. Explain the difference between authentication and authorization.
8. What is a digital signature, and how does it work?
9. What is the principle of Kerckhoffs's law in cryptography?
10. Define confidentiality, integrity, and availability in the context of security.

Symmetric Encryption

11. What is the role of a shared key in symmetric encryption?
12. Explain the working of the Data Encryption Standard (DES).
13. How is Advanced Encryption Standard (AES) more secure than DES?
14. What is the purpose of the initialization vector (IV) in encryption?
15. What is a stream cipher? Provide an example.

Asymmetric Encryption

16. What is the difference between public and private keys in asymmetric cryptography?
17. Explain the working principle of the RSA algorithm.
18. What are some use cases of asymmetric encryption?
19. What is key exchange, and how does the Diffie-Hellman protocol work?
20. How is asymmetric cryptography used in securing SSL/TLS?

Atmiya University Rajkot

Hash Functions

21. What is the primary purpose of a hash function?
22. Explain the concept of a collision in a hash function.
23. What is the difference between MD5 and SHA-256?
24. What are the characteristics of a good cryptographic hash function?
25. What is a Message Authentication Code (MAC), and how is it used?

Network Security

26. What is the purpose of a firewall in network security?
27. Explain the concept of Secure Sockets Layer (SSL) and its modern counterpart, TLS.
28. What is an intrusion detection system (IDS), and how does it differ from an intrusion prevention system (IPS)?
29. What is the purpose of Public Key Infrastructure (PKI)?
30. What is Transport Layer Security (TLS), and how does it ensure data integrity?

Course Code	Course Title
18MCESCC102	**Machine Learning**

Module-1:

Q-1 What is Machine learning? Explain Machine learning schematic model with figure. Q-2 Explain types of learning with example.

Q-3 Explain Hypothesis Space by proper example with Figure.

Q-4 Write a short note on inductive bias.

Q-5 What are the evaluation criteria's of learning algorithm?

Q-6 Write note on Cross validation.

Module-2:

Q-1 What is Regression? Explain types of regression.

Q-2 Predict vehicles sales of year 2017 using linear regression Technique.

Year	GDP (x)	Vehicle sale data in lakhs (y)
2011	6.2	26.3
2012	6.5	26.65
2013	5.48	25.65
2014	6.54	26.01
2015	7.18	27.9
2016	7.93	30.47

Atmiya University Rajkot

2017	7.5	??? (predict)

Q-3 Write a note on logistic regression.

Q-4 Write a note on Polynomial Regression.

Q-5 Write a note on Random forest Regression.

Q-6 Explain Support Vector Regression with example. (Already Done in Class book->Refer PDF also).

Consider Following Data points:

(1,1) , (2,1) , (1,-1), (2,-1), (4,0), (5,1), (5,-1), (6,0)

If Value of (x,y)=(9,?) .Find the value of Y for x=9 using SVR.

Q-7 What is Decision Tree? Explain it with Example.

Q-8 Write a ID3 algorithm for Decision Tree.

Q-9 Consider following sample data:

Day Outlook Temp Humidity Wind Tennis?

D1 Sunny Hot High Weak *No*

Sunny	Hot	High	Strong
Overcast	Hot	High	Weak
Rain	Mild	High	Weak
Rain	Cool	Normal	Weak
Rain	Cool	Normal	Strong
Overcast	Cool	Normal	Strong
Sunny	Mild	High	Weak

Atmiya University Rajkot

D2 No D3 Yes D4 Yes D5 Yes D6 No D7 Yes D8 No

Sunny	Cool	Normal	Weak
Rain	Mild	Normal	Weak
Sunny	Mild	Normal	Strong
Overcast	Mild	High	Strong
Overcast	Hot	Normal	Weak

D9 Yes

D10 Yes

D11 Yes

D12 Yes

D13 Yes

D14 Rain Mild High Strong *No*

Apply ID3 algorithm to find Decision Tree. (Using Entropy and Information gain)

Q-10 What is Entropy and Information gain?

Q-11 Write a short note on Multiple variant regression OR Multiple variable Linear Regression.

(Refer class book)

Q-12 Write note on Non linear Regression.

Q-13 Explain Performance matrices of Regression models.

Atmiya University Rajkot

Q-14 Explain Simple linear regression with example.(Already done in class).For following data set:

Speed	Cost
1.0 GHz	8000 INR
1.5 GHz	13000 INR
2.0 GHz	16000 INR
2.5 GHz	24000 INR
3.0 GHz	30000 INR
3.5 GHz	

If speed=3.5 GHz what is the cost of Computer?

Module-3:

Q-1 Define Bayes Theorem and Derivation of Bayes Theorem.

Q-2 Explain Naïve Bayes Algorithm with example.

OR

Apply Naïve Bayes Algorithm to find probability to play Tennis on 15th day where condition are temp.=cool,humidity=high,wind=strong and outlook=sunny.

Consider following data set:

Day Outlook Temp Humidity Wind Tennis?

D1 Sunny Hot High Weak *No*

Sunny	Hot	High	Strong
Overcast	Hot	High	Weak
Rain	Mild	High	Weak
Rain	Cool	Normal	Weak
Rain	Cool	Normal	Strong
Overcast	Cool	Normal	Strong

Atmiya University Rajkot

Sunny	Mild	High	Weak
Sunny	Cool	Normal	Weak
Rain	Mild	Normal	Weak
Sunny	Mild	Normal	Strong

D2 No D3 Yes D4 Yes D5 Yes D6 No D7 Yes D8 No D9

Yes D10 Yes D11 Yes

D12 Yes D13 Yes D14 Rain Mild High Strong *No*

Q-3 Explain Naïve bayes variants: Bernoulli distribution, multinomial distribution and Gaussian Distribution.

Q-4 What is KNN? Explain it algorithm and also write advantage and disadvantage of it. Q-5 Apply KNN algorithm for following Data set:

Name	Age	Gender	Sport
Ajay	32	Male	Football
Mark	40	Male	Neither
Sara	16	Female	Cricket
Zaira	34	Female	Cricket
Sachin	55	Male	Neither
Rahul	40	Male	Cricket
Pooja	20	Female	Neither
Smith	15	Male	Cricket

Atmiya University Rajkot

Laxmi	55	Female	Football
Michael	15	Male	Football
New Data:			
Angelina	5	Female	????

Q-6 Apply KNN algorithm for following Data set:

Atmiya University Rajkot

Course Code	Course Title
18MCESCC103	**Computer Algorithm**

Basic Questions

1. What is an algorithm, and why is it important in computer science?
2. Define the time complexity and space complexity of an algorithm.
3. Explain the difference between a greedy algorithm and a dynamic programming approach.
4. What is recursion, and how is it different from iteration?
5. What is the difference between divide-and-conquer and dynamic programming?
6. What are the characteristics of a good algorithm?
7. Explain the concept of "Big-O" notation with an example.
8. What is the difference between worst-case, best-case, and average-case time complexity?
9. What is an asymptotically optimal algorithm?
10. What is the difference between polynomial-time and exponential-time algorithms?

Sorting and Searching

11. How does the bubble sort algorithm work, and what is its time complexity?
12. What is the main idea behind merge sort?
13. How does quicksort differ from merge sort?
14. Explain how binary search works and its time complexity.
15. What is the difference between linear search and binary search?
16. Describe the concept of a stable sorting algorithm. Can you give an example?
17. What is the time complexity of insertion sort, and how does it compare to selection sort?
18. What is the heap sort algorithm, and where is it used?
19. How does counting sort differ from comparison-based sorting algorithms?
20. What is radix sort, and when is it preferred?

Graph Algorithms

21. What is the difference between Depth-First Search (DFS) and Breadth-First Search (BFS)?
22. What is Dijkstra's algorithm, and how is it used to find the shortest path?
23. How does Prims algorithm work for finding the Mini mum Spanning Tree (MST)?
24. What is the difference between Kruskal's algorithm and Prim's algorithm?
25. Explain the concept of topological sorting in a Directed Acyclic Graph (DAG)
26. What is Floyd-Warshall's algorithm, and what problem does it solve?

Atmiya University Rajkot

27. How is Bellman-Ford different from Dijkstra's algorithm?
28. What is the traveling salesman problem (TSP), and why is it challenging?
29. What is a strongly connected component in a graph? How can it be identified?
30. How does the A* algorithm work, and where is it used?

Atmiya University
Rajkot

Course Code	Course Title
18MCESID101	**Basic of Transportation Engineering**

General Concepts

1. What is transportation engineering, and what are its main objectives?
2. What are the primary modes of transportation?
3. Explain the importance of transportation in urban planning.
4. What are the key components of a transportation system?
5. What is the difference between rural and urban transportation systems?
6. What is the role of a traffic engineer in transportation engineering?
7. Define the term "road hierarchy" and give examples of different types of roads.
8. What is the significance of accessibility and mobility in transportation planning?
9. What is Level of Service (LOS), and why is it important?
10. Explain the concept of trip generation in transportation studies.

Highway Engineering

11. What is the difference between flexible and rigid pavements?
12. Explain the factors considered in the geometric design of highways.
13. What is the super-elevation of a road, and why is it provided?
14. Define the term "design speed" in highway engineering.
15. What is a camber in a road, and what is its purpose?
16. What is a road cross-section, and what are its components?
17. Explain the concept of traffic volume and its measurement.
18. What is the difference between an interchange and an intersection?
19. What is a road gradient, and how does it affect vehicle movement?
20. What are the main types of road maintenance?

Traffic Engineering

21. What is traffic density, and how is it calculated?
22. Explain the relationship between speed, flow, and density in traffic flow theory.
23. What are the different types of traffic signs, and what do they signify?
24. What is a traffic signal, and how is it timed?
25. What is the purpose of road markings, and how do they enhance safety?
26. What are the common causes of traffic congestion?
27. Define the term "spot speed" and explain how it is measured.
28. What is the significance of accident analysis in transportation engineering?
29. Explain the concept of parking studies and parking management.

Atmiya University Rajkot

30. What is the role of Intelligent Transportation Systems (ITS) in modern traffic management?

Atmiya University
Rajkot

Course Code	Course Title
18MCESID102	**Electrical Technology**

Basic Electrical Concepts

1. What is the difference between AC (alternating current) and DC (direct current)?
2. Define Ohm's Law and its formula.
3. What are the three main components of an electrical circuit?
4. Explain the difference between conductors and insulators.
5. What is electrical resistance, and what is its unit?
6. What is the purpose of a fuse in an electrical circuit?
7. Define power in electrical terms and its unit.
8. What is the relationship between voltage, current, and resistance?

Electrical Machines

9. What is the working principle of a transformer?
10. Define the difference between a generator and a motor.
11. What is the function of the stator in an electrical motor?
12. Explain the difference between a synchronous and an asynchronous motor.
13. Why are transformers rated in kVA and not in kW?
14. What is the purpose of a commutator in a DC motor?

Circuit Analysis

15. What is the difference between a series and a parallel circuit?
16. How do you calculate total resistance in a series circuit?
17. How is current distributed in a parallel circuit?
18. State Kirchhoff's Current Law (KCL).
19. State Kirchhoff's Voltage Law (KVL).

Power Systems

20. What is a three-phase system, and why is it preferred over a single-phase system?
21. Define power factor and its significance in power systems.
22. What is the purpose of earthing in electrical systems?
23. What are the main components of a power transmission system?
24. What is the difference between a circuit breaker and a switch?

Atmiya University Rajkot

Measuring Instruments

25. What is the function of a multimeter?
26. How does an ammeter measure current in a circuit?
27. What is the principle of operation of a voltmeter?
28. What is the difference between an analog and a digital measuring instrument?

Electrical Safety and Standards

29. What is the importance of insulation in electrical wiring?
30. What are the common types of electrical hazards, and how can they be prevented?

Atmiya University
Rajkot

Course Code	Course Title
18MCESID103	**Alternate Energy Sources**

General Concepts

1. What are alternate energy sources, and why are they important?
2. Define renewable energy and provide examples.
3. What is the difference between renewable and non-renewable energy?
4. List the main benefits of using alternate energy sources.
5. What are some common challenges in adopting alternate energy?

Solar Energy

6. What is solar energy, and how is it harnessed?
7. Explain the working principle of a solar panel.
8. What is photovoltaic (PV) technology?
9. What are the advantages of using solar energy?
10. What are the limitations of solar energy systems?

Wind Energy

11. How does a wind turbine generate electricity?
12. What are the key components of a wind turbine?
13. Where are wind farms typically located?
14. What are the pros and cons of wind energy?
15. What is the difference between onshore and offshore wind farms?

Hydropower

16. What is hydropower, and how does it work?
17. Explain the role of a dam in generating hydroelectric power.
18. What is the difference between run-of-the-river and reservoir-based hydropower plants?
19. What are the environmental impacts of hydropower?
20. Why is hydropower considered a renewable energy source?

Atmiya University Rajkot

Bioenergy

21. What is bioenergy, and how is it produced?
22. What are the main types of biomass used for energy?
23. What is biogas, and how is it generated?
24. List some advantages of bioenergy.
25. How does bioenergy help in waste management?

Geothermal Energy

26. What is geothermal energy, and how is it harnessed?
27. Where are geothermal power plants usually located?
28. What are the main applications of geothermal energy?
29. What are the advantages and limitations of geothermal energy?

Future Trends and Applications

30. Why is the development of alternate energy sources critical for sustainable development?

Atmiya University
Rajkot

Course Code	Course Title
18MCESID104	Wireless Communication Standards

General Concepts

1. What is wireless communication?
2. Define a wireless communication standard.
3. Why are wireless communication standards important?
4. What is the difference between licensed and unlicensed frequency bands?
5. Name some commonly used frequency bands for wireless communication.

Wi-Fi Standards

6. What does Wi-Fi stand for?
7. What is the IEEE 802.11 standard used for?
8. How do Wi-Fi standards like 802.11a, 802.11b, and 802.11g differ?
9. What is the range of the 2.4 GHz and 5 GHz bands in Wi-Fi networks?
10. What is the purpose of WPA (Wi-Fi Protected Access) in Wi-Fi standards?

Cellular Standards

11. What is the difference between 2G, 3G, 4G, and 5G cellular networks?
12. What is LTE, and how is it related to 4G?
13. What is the role of the GSM (Global System for Mobile Communications) standard?
14. How does CDMA differ from GSM?
15. What improvements does 5G bring over 4G networks?

Bluetooth Standards

16. What is Bluetooth technology used for?
17. What is the range of Bluetooth devices?
18. How does Bluetooth Low Energy (BLE) differ from classic Bluetooth?
19. What is the significance of Bluetooth 5.0?
20. What frequency band does Bluetooth operate in?

Near Field Communication (NFC)

21. What is NFC, and how does it work?
22. What are the common applications of NFC technology?
23. How does NFC differ from Bluetooth in terms of range and usage?

IoT and LPWAN Standards

24. What is the role of wireless communication standards in IoT (Internet of Things)?
25. What is LoRa, and how is it used in IoT networks?
26. How does Zigbee differ from Wi-Fi in IoT applications?
27. What is NB-IoT, and why is it important?

Satellite and Other Standards

28. What are satellite communication standards, and where are they used?
29. What is WiMAX, and how does it differ from Wi-Fi?
30. What is the importance of spectrum allocation in wireless communication?

Atmiya University
Rajkot

Course Code	Course Title
18MCESID201	**Intelligent Transportation System**

Introduction to ITS

1. What is an Intelligent Transportation System (ITS)?
2. What are the key objectives of an ITS?
3. How does ITS improve the safety and efficiency of transportation systems?
4. What are the main components of an ITS?
5. What role do sensors play in an ITS?
6. How does ITS contribute to reducing traffic congestion?
7. Explain the concept of vehicle-to-vehicle (V2V) communication in ITS.

ITS Technologies

8. What is the role of Geographic Information Systems (GIS) in ITS?
9. What are the main types of traffic sensors used in ITS?
10. How do cameras and video detection systems help in managing traffic?
11. What is Adaptive Traffic Signal Control (ATSC), and how does it work?
12. Explain the concept of connected vehicles in ITS.
13. How does a Real-Time Traffic Management System work in an ITS?
14. What is the function of dynamic message signs (DMS) in ITS?
15. What is the role of GPS (Global Positioning System) in ITS applications?

Applications of ITS

16. What is an Advanced Traveler Information System (ATIS)?
17. How do Advanced Traffic Management Systems (ATMS) help in controlling traffic?
18. What is the significance of Electronic Toll Collection (ETC) systems in ITS?
19. Explain how ITS can be used for public transportation management.
20. How does ITS contribute to improving environmental sustainability in transportation?
21. What are some applications of ITS in freight and logistics management?

Safety and Security in ITS

22. How does ITS improve road safety for drivers and pedestrians?
23. What are the benefits of Vehicle-to-Infrastructure (V2I) communication in ITS?
24. What is the role of ITS in managing emergency vehicles and incidents?

Atmiya University Rajkot

25. How does ITS assist in reducing accidents caused by weather conditions or road hazards?

Challenges and Future of ITS

26. What are some of the challenges in implementing ITS on a large scale?
27. How does data privacy and security affect ITS systems?
28. What role does artificial intelligence (AI) play in the future development of ITS?
29. How can autonomous vehicles integrate with existing ITS infrastructures?
30. What is the potential impact of 5G technology on the future of ITS?

Atmiya University
Rajkot

Course Code	Course Title
18MCESID202	**Renewable Energy Sources**

Introduction to Renewable Energy

1. What is renewable energy, and why is it important?
2. How do renewable energy sources differ from non-renewable energy sources?
3. What are the key benefits of using renewable energy over fossil fuels?
4. How does renewable energy contribute to environmental sustainability?
5. What are the most common types of renewable energy sources?

Solar Energy

6. What is solar energy, and how is it harnessed?
7. Explain how photovoltaic (PV) cells work to convert sunlight into electricity.
8. What are the different types of solar power systems (e.g., solar thermal, solar PV)?
9. What factors influence the efficiency of solar panels?
10. How do solar power plants generate electricity on a large scale?

Wind Energy

11. What is wind energy, and how is it generated?
12. How does a wind turbine convert wind into electrical energy?
13. What are the main components of a wind turbine?
14. What are the advantages and disadvantages of wind energy?
15. How does wind energy contribute to reducing greenhouse gas emissions?

Hydropower

16. What is hydropower, and how does it generate electricity?
17. What is the difference between a run-of-the-river and a reservoir-based hydropower system?
18. What are the environmental impacts of large-scale hydropower projects?
19. How do small-scale hydropower plants work compared to larger ones?
20. What is pumped storage hydropower, and how does it work?

Atmiya University
Rajkot

Bioenergy

21. What is bioenergy, and how is it produced from organic materials?
22. What are the different types of biomass used for energy generation?
23. What is biogas, and how is it produced from organic waste?
24. What are the benefits and challenges of using bioenergy as a renewable energy source?
25. How does bioenergy contribute to reducing waste and greenhouse gas emissions?

Geothermal Energy

26. What is geothermal energy, and how is it harnessed?
27. How does geothermal power generation work, and what are its main applications?
28. What are the environmental concerns associated with geothermal energy production?
29. Where are the most significant geothermal resources located around the world?

Other Renewable Energy Sources

30. What is tidal energy, and how is it used to generate electricity?

Atmiya University
Rajkot

Course Code	Course Title
18MCESID203	**Quality Engineering**

Introduction to Quality Engineering

1. What is quality engineering, and why is it important in manufacturing and service industries?
2. What are the key objectives of quality engineering?
3. What is the difference between quality control and quality engineering?
4. What is the role of a quality engineer in a company?
5. What are the essential principles of quality engineering?

Quality Management Systems

6. What is a Quality Management System (QMS)?
7. Explain the concept of Total Quality Management (TQM).
8. What are ISO 9001 standards, and why are they important for quality management?
9. How does the PDCA cycle (Plan-Do-Check-Act) apply to quality engineering?
10. What is Six Sigma, and how is it used to improve quality?

Quality Planning and Assurance

11. What is quality planning, and how does it relate to product development?
12. What is the difference between quality assurance and quality control?
13. What is a quality audit, and what is its purpose in quality engineering?
14. How do you determine quality requirements for a product or service?
15. What are the common quality assurance methodologies used in engineering?

Statistical Process Control (SPC)

16. What is Statistical Process Control (SPC), and how is it used to monitor quality?
17. What are control charts, and how do they help in quality control?
18. What is the difference between Type I and Type II errors in SPC?
19. Explain the concept of process capability (Cp, Cpk) in quality engineering.
20. What is the significance of a normal distribution in quality control?

Problem Solving and Root Cause Analysis

21. What is root cause analysis, and why is it important in quality engineering?
22. Explain the steps involved in a typical problem-solving methodology (e.g., DMAIC).
23. What are the 5 Whys, and how is it used in identifying root causes?
24. What is Fishbone Diagram (Ishikawa Diagram), and how does it help in quality problem-solving?
25. What is Failure Mode and Effect Analysis (FMEA), and how is it applied?

Reliability Engineering

26. What is reliability engineering, and why is it important in product design?
27. What are the key measures of reliability (e.g., Mean Time Between Failures, MTBF)?
28. How is Failure Rate (FR) calculated, and what does it signify in reliability testing?
29. What is Accelerated Life Testing (ALT), and when is it used?
30. How does Reliability-Centered Maintenance (RCM) contribute to quality engineering?

Atmiya University
Rajkot

Course Code	Course Title
18MCESID204	**Arduino & Raspberry Pi Programming**

Introduction to Arduino

1. What is an Arduino, and how is it used in electronics and programming?
2. What are the key components of an Arduino board?
3. How do you program an Arduino, and what software is used?
4. What is the difference between Arduino and a microcontroller?
5. Explain the concept of an "Arduino sketch."
6. What is the role of pins on an Arduino board, and how are they used (e.g., digital, analog)?
7. What are the different types of Arduino boards, and what are their features?
8. How do you upload a program to an Arduino board from the Arduino IDE?

Arduino Programming Basics

9. What is the structure of an Arduino program? Describe the `setup()` and `loop()` functions.
10. What is the purpose of `delay()` in Arduino programming?
11. How do you read data from a sensor (e.g., temperature or motion sensor) using Arduino?
12. Explain the concept of digital and analog I/O in Arduino.
13. How do you control an LED using an Arduino?
14. What is a pull-up resistor, and why is it important when working with digital inputs on Arduino?
15. What is PWM (Pulse Width Modulation), and how is it used to control motors or LEDs?

Introduction to Raspberry Pi

16. What is a Raspberry Pi, and how does it differ from Arduino?
17. What are the different models of Raspberry Pi, and what are their specifications?
18. How do you set up a Raspberry Pi for the first time (e.g., installing an OS)?
19. What is the role of GPIO (General Purpose Input/Output) pins on Raspberry Pi?
20. What programming languages can be used on Raspberry Pi? How is Python used with Raspberry Pi?

Atmiya University Rajkot

Raspberry Pi Programming Basics

21. How do you control an LED using Raspberry Pi's GPIO pins with Python?
22. What is the purpose of the `RPi.GPIO` library in Raspberry Pi programming?
23. Explain how to read data from a sensor (e.g., temperature or distance sensor) using Raspberry Pi.
24. What is the difference between digital and analog input/output on Raspberry Pi?
25. How do you use a camera module with Raspberry Pi to take pictures or record video?
26. What is SSH, and how is it used to access Raspberry Pi remotely?

Advanced Arduino and Raspberry Pi Projects

27. How can Arduino and Raspberry Pi be connected to work together in a project?
28. Describe an example of an IoT (Internet of Things) project using Arduino and Raspberry Pi.
29. How can you integrate a web server with Raspberry Pi to control devices over the internet?
30. How do you use sensors to automate tasks (e.g., home automation) with Arduino or Raspberry Pi?

Course Code	Course Name
18BTCECC504	Advance Computer Network(self study)

Unit 1: Optical Networking and WAN Protocols

1. What is optical networking, and why is it important in modern communication?
2. Explain the basic principles of optical networks.
3. What is the SONET/SDH standard, and how does it work in high-speed communication?
4. What are the main differences between SONET and SDH?
5. Explain Dense Wavelength Division Multiplexing (DWDM) and its significance in optical networking.
6. How does DWDM increase the capacity of optical fiber networks?
7. What is ATM (Asynchronous Transfer Mode) technology, and how does it differ from other networking technologies?
8. What are the different faces of ATM, and how do they contribute to network performance?
9. Describe the B-ISDN reference model and its components.
10. How does the ATM layer work in the context of network traffic management?
11. What is the role of the ATM Adaptation Layer (AAL) in ATM networks?
12. Describe the ATM physical interface and its characteristics.
13. How do optical networks facilitate long-distance data transmission?
14. What are the primary applications of SONET/SDH and DWDM in WANs?

Unit 2: Packet Switching Protocols and TCP/IP Interfaces

15. What is packet switching, and how does it work in data communication?
16. Explain the concept of virtual circuit packet switching and its benefits.
17. What is X.25, and how does it differ from other packet-switched technologies?
18. How does X.25 ensure reliable communication over long distances?
19. What is switched multimegabit data service (SMDS), and how does it support high-speed data transmission?
20. Explain the role of the IP layer protocol in the TCP/IP model.
21. How does the IP layer interact with other layers in the TCP/IP model?
22. What are the key differences between connectionless and connection-oriented communication in packet switching?
23. How does the concept of a virtual circuit differ from datagram packet switching?
24. What are the advantages and limitations of X.25 in packet-switched networks?
25. How is IP addressing structured in a typical TCP/IP network?

Unit 3: Routing Techniques and Protocols

26. What is the difference between intra-domain and inter-domain routing?
27. Explain the concept of subnetting and its importance in IP networking.
28. How does subnetting help in the efficient use of IP addresses?

Atmiya University
Rajkot

29. What is unicast routing, and how does it differ from multicast routing?
30. Describe the key features of unicast routing protocols.
31. Explain multicast routing and its importance in modern networking.
32. How does IP over ATM work, and what are its advantages?
33. What is Multiprotocol Label Switching (MPLS), and how does it improve routing efficiency?
34. How does MPLS enable faster data forwarding in large networks?
35. What is the role of IP multicasting in networks?
36. Explain how Voice over IP (VoIP) works and its relationship to IP multicasting.
37. Describe the Routing Information Protocol (RIP) and its function in network routing.
38. How does RIP work, and what are its limitations in modern networks?
39. What is the Interior Gateway Routing Protocol (IGRP), and how does it differ from RIP?
40. How does IGRP handle routing in large enterprise networks?

Unit 4: Network Management and Traffic Engineering Basics

41. What is network management, and why is it important for large-scale networks?
42. Explain the different types of network management protocols.
43. What are the goals of traffic engineering in a network?
44. How does traffic sizing help in optimizing network performance?
45. Describe the traffic characteristics that need to be considered in network traffic engineering.
46. What is the role of time and delay considerations in network traffic management?
47. How do connectivity, availability, reliability, and maintainability impact network performance?
48. Explain the concept of throughput calculation in network management.
49. How do network managers ensure that the network is available and performs efficiently?
50. What are some common challenges in traffic engineering for large-scale networks?

Unit 5: Introduction to Cisco IOS

51. What is Cisco IOS, and how does it facilitate the operation of Cisco routers and switches?
52. Explain how multimedia is transmitted over the Internet, and what protocols are typically used.
53. How does the Cisco Router User Interface work, and what are its key features?
54. What is the Command Line Interface (CLI) in Cisco IOS, and why is it essential for network administration?
55. What are the basic administrative functions of a router in Cisco IOS?
56. How do network administrators view, save, and erase configurations in Cisco IOS?
57. What is the role of switching services in Cisco IOS?
58. Explain how routing and switching functions are managed in Cisco IOS.
59. What is the importance of configuring routing tables in Cisco routers?
60. How do you configure and troubleshoot IP addresses in Cisco IOS devices?

B.Tech. SEM.-V
Subject: Anal□sis & Design of Algorithm(18BTCECC501)
Question Bank

1. Define Activity Selection Problem. Explain how it can be solved using Greedy method.
2. Solve the following Fractional Knapsack Problem using Greedy Algorithm. There are five items whose weights and values are given in following arrays. Weight w [] = {1,2,5,6,7} Value v [] = {1, 6, 18, 22, 28} Show your equation and find out the optimal knapsack items for weight capacity of 11 units.
3. Using greedy algorithm find an optimal schedule for following jobs with n=7. profits: (P1, P2, P3, P4, P5, P6, P7) = (4, 6, 19, 23, 8, 3, 40) and deadline (d1, d2, d3, d4, d5, d6, d7) = (2, 4, 4, 5, 2, 3, 2)
4. Find MST for the given graph using Prim's algorithm.

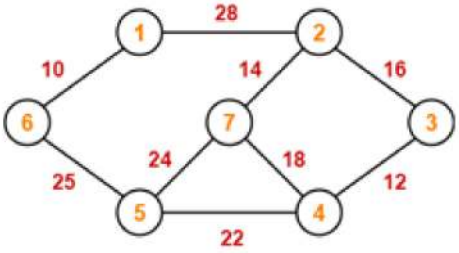

5. Find MST for given graph using Krushkal's algorithm.

Atmiya University

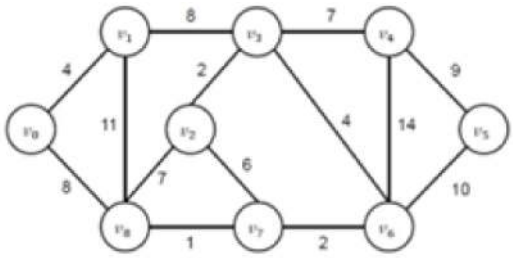

6. Determine LCS of {abaababababb} and {abaa}.
7. Explain 0/1 knapsack using suitable example.
8. Define Making Change Problem. Explain how it can be solved using Dynamic Programming.
9. Using dynamic programming find out the optimal sequence for the matrix chain multiplication of A_{4x10}, B_{10x3}, C_{3x12}, D_{12x20} matrices.
10. Explain All Pair Shortest Path with example.
11. Define 4 Queen's Problem. Explain how it can be solved using Backtracking.
12. Explain how to solve knapsack problem using backtracking.
13. Write and explain Travelling Salesman problem with example.
14. Show the comparisons with Rabin-Karp string matcher makes for the pattern P=0001 in the text T=000010001010001
15. Show the comparisons that KMP string matcher makes for the pattern P=abaa in the text T=ababbaabaabbbabaa
16. Define P, NP, NP-Hard and NP-Complete Problems.

Atmiya University

Course Code	Course Name
18BTCEDC701	Advanced DOT NET Technology

Here are 50 questions based on the provided ASP.NET syllabus, categorized by unit:

Unit 1: ASP.NET MVC Introduction

1. What is the MVC design pattern, and how does it work?
2. Define the roles of Model, View, and Controller in the MVC pattern.
3. Describe the structure of an MVC application.
4. What is the purpose of a controller in an MVC application?
5. Explain strongly typed views and their benefits.
6. What is the Razor View Engine, and how does it differ from the Web Forms View Engine?
7. Define a partial view and explain its use in MVC.
8. What is model scaffolding, and how does it help developers?
9. How does model binding work in ASP.NET MVC?
10. Describe how the Razor syntax works in MVC applications.

Unit 2: Entity Framework

11. What is ADO.NET Entity Framework, and why is it used?
12. Compare Entity Framework (EF) with LINQ to SQL.
13. Explain the architecture of Entity Framework.
14. List the key versions of Entity Framework and their features.
15. What are DbContext and DbSet in Entity Framework?
16. How does the ObjectStateManager handle the entity lifecycle?
17. What is Entity SQL? Provide an example of a query.
18. Differentiate between lazy loading, eager loading, and explicit loading.
19. How does Entity Framework manage database connections?
20. What are the advantages of using Entity Framework over traditional ADO.NET?

Unit 3: ASP.NET MVC Advanced

21. What are HTML Helpers, and how are they used in MVC?
22. List and explain the different types of Action Results in MVC.
23. What is routing in MVC, and how is it configured?
24. Explain the role of data annotations in validation.

Atmiya University Rajkot

25. How is Ajax used in ASP.NET MVC applications?
26. What is the process of writing unit tests for MVC controllers?
27. Describe the significance of TempData, ViewData, and ViewBag in MVC.
28. How do custom HTML Helpers differ from built-in ones?
29. Explain how to implement custom validation attributes in MVC.
30. How can client-side and server-side validations be used together in MVC?

Unit 4: ASP.NET Web API

31. What is ASP.NET Web API, and how does it differ from MVC?
32. Describe the role of an API controller in Web API.
33. How do you configure a Web API application?
34. What are Web API routes, and how are they defined?
35. Explain the process of binding parameters in Web API methods.
36. What are the different ways to filter HTTP requests in Web API?
37. How is tracing implemented in a Web API application?
38. Describe the differences between RESTful services and SOAP services.
39. What are HTTP verbs, and how are they used in Web API?
40. How can you secure a Web API?

Unit 5: Xamarin Forms

41. What is Xamarin.Forms, and how does it support cross-platform mobile development?
42. Differentiate between Xamarin and Xamarin.Forms.
43. Explain the role of XAML in Xamarin.Forms development.
44. List and describe the primary Xamarin controls.
45. How is database access handled in a Xamarin.Forms application?
46. What are the steps to consume a web service in Xamarin.Forms?
47. Describe the process of deploying a Xamarin.Forms application.
48. What are the advantages of using Xamarin.Forms for mobile development?
49. How can platform-specific code be integrated into a Xamarin.Forms application?
50. Explain the use of MVVM (Model-View-ViewModel) in Xamarin.Forms development.

Atmiya University
Rajkot

Course Code	Course Name
18BTCEDC702	Advanced Java

Unit 1: JDBC Programming

1. What is the JDBC connectivity model, and how does it work?
2. List and describe the different types of JDBC drivers.
3. Explain the steps involved in connecting to a database using JDBC.
4. How do you create a SQL query and retrieve results using JDBC?
5. What is the purpose of the `SQLException` class?
6. Differentiate between `SQLException` and `SQLWarning` classes.
7. What is the role of the `Statement` interface in JDBC?
8. How does `PreparedStatement` differ from `CallableStatement`?
9. Describe the `ResultSet` interface and its use in JDBC.
10. How do you handle updatable result sets in JDBC?
11. Explain how to execute SQL queries and retrieve metadata using `ResultSetMetaData`.
12. What is the purpose of transaction management in JDBC?
13. How do you perform batch updates using JDBC?
14. Explain the difference between auto-commit and manual-commit in JDBC.
15. How can you handle database errors effectively in JDBC programs?

Unit 2: Servlet API

16. What is the servlet model, and why is it used?
17. Describe the lifecycle of a servlet.
18. What are HTTP methods, and how are they structured in servlets?
19. Explain the role of the deployment descriptor in servlets.
20. Differentiate between `ServletContext` and `ServletConfig`.
21. How do attributes work in servlets?
22. What is the role of the `RequestDispatcher` interface?
23. Explain the filter API and its components: `Filter`, `FilterChain`, and `FilterConfig`.
24. How are cookies managed in servlets?
25. What is session management in servlets, and why is it important?
26. Differentiate between state and session in servlet-based applications.
27. How is session timeout configured in servlets?
28. What is URL rewriting, and how is it implemented?
29. Explain the role of HTTP headers in session tracking.
30. How do you implement user authentication in servlets?

Unit 3: Java Server Pages (JSP)

31. Compare JSP with servlets. What are the key differences?
32. Describe the lifecycle of a JSP page.
33. How does JSP processing work in a web application?
34. What is the role of MVC in JSP application design?
35. Explain how to set up a JSP development environment.
36. What are JSP implicit objects? List and describe any three.
37. How is form data processed in JSP?
38. Describe how session handling is implemented in JSP.
39. Explain how cookies are managed in JSP applications.
40. How do you access a database from a JSP page?
41. What is the purpose of JSP Standard Tag Libraries (JSTL)?
42. Describe the use of custom tags in JSP.
43. What is JSP Expression Language (EL)? Provide examples.
44. How is exception handling implemented in JSP?
45. What is JSP XML processing, and when is it used?

Unit 4: Java Server Faces (JSF) and Struts

46. What is Java Server Faces (JSF), and how does it differ from JSP?
47. Describe the request processing lifecycle in JSF.
48. What is the purpose of JSF Expression Language? Provide examples.
49. Explain the role of JSF standard components in web applications.
50. What are JSF Facelets, and how are they used?
51. Describe the functionality of JSF converter tags.
52. How is validation performed in JSF using tags?
53. Explain how event handling works in JSF applications.
54. How can database access be implemented in JSF?
55. What is PrimeFaces, and how is it related to JSF?
56. Provide an introduction to the Struts framework.
57. How does Struts support MVC architecture?
58. Explain the role of action classes in Struts.
59. What is the significance of Struts configuration files?
60. How does Struts handle form submissions and validations?

Unit 5: Hibernate and Spring

61. What is Hibernate, and why is it used?
62. Explain the architecture of Hibernate.
63. What are Hibernate mapping types? Provide examples.
64. What is O/R mapping, and how is it achieved in Hibernate?
65. Explain the role of Hibernate annotations in application development.
66. What is Hibernate Query Language (HQL)? Provide examples.

67. Describe the process of configuring Hibernate in an application.
68. What is the purpose of la□ y loading and eager loading in Hibernate?
69. How does Hibernate handle transactions?
70. Explain the concept of the Spring framework and its advantages.
71. Describe the architecture of the Spring framework.
72. What is the Spring bean lifecycle?
73. How are Spring beans configured using XML?
74. What are the key features of Spring□s transaction management?
75. Explain how Spring integrates with Hibernate in an application.

Atmiya University
Rajkot

Faculty of Engineering and Technology
Department of Computer Engineering

Course Code	Course Name
18BTCEDC703	Advance Web Programming

1. What is the difference between a class and an object in PHP?
2. How do you create and instantiate a class in PHP?
3. What is the purpose of public, private, and protected access modifiers in PHP?
4. Explain the role of constructors and destructors in a PHP class.
5. What are magic methods in PHP? Provide examples.
6. How is inheritance implemented in PHP OOP?
7. What is the purpose of the `__get()` and `__set()` magic methods in PHP?
8. What is the MVC design pattern, and why is it used in web development?
9. Explain the URL structure in CodeIgniter.
10. Describe the file structure of a CodeIgniter project.
11. How do you set up and configure a CodeIgniter application?
12. What is the purpose of the `application/config` folder in CodeIgniter?
13. How do you create your first CodeIgniter application?
14. Explain the difference between the model, view, and controller in CodeIgniter.

16. What is the role of `autoload.php` in CodeIgniter?
17. What is a library in CodeIgniter, and why is it used?
18. How do you load a library in CodeIgniter?
19. What is the Benchmarking class in CodeIgniter?
20. Explain the Input class and its role in form validation.
21. How does CodeIgniter handle security in forms using the Security class?
22. What is the purpose of the Email class in CodeIgniter?
23. How do you send emails using the Email library in CodeIgniter?
24. Explain the File Uploading class in CodeIgniter with an example.
25. How do you configure file upload settings in CodeIgniter?
26. What is the Image Manipulation library in CodeIgniter used for?
27. Explain how to create thumbnails using the Image Manipulation library.
28. What is the Session class in CodeIgniter?
29. How does CodeIgniter handle session management?
30. What are the differences between database sessions and file-based sessions in CodeIgniter?
31. Explain the process of session initiali□ ation and destruction in CodeIgniter.

31. What are helper functions in CodeIgniter, and why are they used?
32. How do you load a helper in CodeIgniter?
33. Explain the purpose of the Date helper with an example.
34. What is the Email helper in CodeIgniter, and how is it used?
35. Explain the use of the Directory helper in CodeIgniter.
36. What is the purpose of the Form helper? Provide an example of its usage.
37. How does the Security helper protect against XSS in CodeIgniter?

Atmiya University Rajkot

38. What is the Url helper, and how is it used in CodeIgniter applications?
39. Explain the use of the HTML helper in CodeIgniter.
40. How do you use multiple helpers in a single CodeIgniter application?
41. Describe the difference between a helper and a library in CodeIgniter.
42. How can custom helper functions be created and used in CodeIgniter?
43. What are some commonly used methods provided by the Form helper?
44. How does the Url helper facilitate link generation in CodeIgniter?
45. What are some security functions provided by the Security helper?

46. Why is form validation important in web applications?
47. How do you use the Form Validation library in CodeIgniter?
48. What are validation rules, and how are they saved in the config file?
49. Explain the use of callbacks in form validation.
50. How do you perform a simple database query in CodeIgniter?
51. What is the difference between `query()` and `get()` methods in CodeIgniter□s database interaction?
52. How do you use the result helper functions in database queries?
53. What is Active Record in CodeIgniter?
54. Explain the concept of Active Record caching with an example.
55. What is method chaining, and how is it used in database queries?
56. How do you insert, update, and delete records in CodeIgniter□s database library?
57. What are the steps to create a database table in CodeIgniter using Active Record?
58. Explain how transactions are managed in CodeIgniter□s database library.
59. How do you interact with multiple database connections in CodeIgniter?
60. How can you manipulate databases using CodeIgniter□s migration feature?

Course Code	Course Name
18BTCEDC802	Artificial Intelligence

Unit 1: Overview of AI Problems and State Space Search

1. What is Artificial Intelligence (AI)?
2. Define an AI problem and explain its components.
3. What is state space search in AI?
4. How does a state space represent a problem in AI?
5. What are the characteristics of a production system in AI?
6. Explain the concept of a production system with an example.
7. What is the 'Generate and Test' method in problem-solving?
8. Describe how the Generate and Test method works in AI.
9. What is Hill Climbing in search algorithms?
10. What are the advantages and limitations of Hill Climbing search?
11. Explain the Best First Search algorithm with an example.
12. How does Best First Search differ from Hill Climbing?
13. What is the difference between uninformed and informed search strategies?

Unit 2: Heuristic Search Techniques and Predicate Logic

14. What is Heuristic Search in AI?
15. Define the concept of "Means-Ends Analysis" in heuristic search.
16. How is the Cryptarithmetic problem solved using AI techniques?
17. What are the main steps in solving a cryptarithmetic problem?
18. Explain how the "Isa Relationship" is used in AI knowledge representation.
19. What is a computable function in the context of AI?
20. Define Predicate Logic and its role in AI.
21. Explain how predicates are used to represent knowledge in AI.
22. What is the role of logical variables in predicate logic?
23. How do logical connectives work in predicate logic?

Unit 3: Knowledge Representation Rules and Issues

24. What is knowledge representation in AI?
25. Why is knowledge representation crucial in AI?
26. What are the different approaches to knowledge representation?
27. Explain the difference between procedural and declarative knowledge.
28. How does forward reasoning work in knowledge representation?
29. What is backward reasoning, and how does it differ from forward reasoning?

Atmiya University Rajkot

30. How do representations and mappings help in AI knowledge processing?
31. What are the issues involved in knowledge representation?
32. How do semantic networks represent knowledge?
33. What is the role of frames in AI knowledge representation?
34. Define the concept of a production rule in knowledge representation.

Unit 4: Game Playing and Statistical Reasoning

35. What is the role of game playing in AI?
36. Explain the Minimax algorithm in the context of game playing.
37. What is Alpha-Beta pruning in game tree search?
38. How does Alpha-Beta pruning optimize the Minimax algorithm?
39. Define the concept of "Block World Problem" in AI.
40. What is goal stack planning in AI?
41. Explain Bayesian reasoning and Bayes' Theorem in AI.
42. How is Bayes' Theorem used to make probabilistic inferences?
43. What is a Bayesian Network, and how is it used in AI?
44. What are fuzzy logic systems in AI?
45. How is fuzzy logic different from traditional binary logic?
46. Describe the concept of Natural Language Processing (NLP) in AI.
47. What are the main challenges in Natural Language Processing?

Unit 5: Introduction to PROLOG

48. What is PROLOG, and what are its main features?
49. Explain the syntax of PROLOG with examples.
50. How are numeric functions used in PROLOG?
51. Describe the basic list manipulation functions in PROLOG.
52. How does input/output work in PROLOG?
53. What are local variables in PROLOG, and how are they used?
54. Define predicates in PROLOG and give examples.
55. How does recursion work in PROLOG?
56. What is iteration in PROLOG, and how does it differ from recursion?
57. How can PROLOG be used for problem-solving?
58. Provide an example of condition handling in PROLOG.
59. How do PROLOG predicates help in backtracking?
60. How is PROLOG used in AI for knowledge representation?

Atmiya University
Rajkot

Course Code	Course Name
18BTCEDC803	Big Data Analytics

Unit 1: Introduction to Big Data

1. What is Big Data, and why is it important?
2. What are the Four Vs of Big Data?
3. Explain the concept of a Distributed File System (DFS).
4. How does Big Data differ from traditional data in terms of volume, variety, velocity, and veracity?
5. What are the main drivers for the growth of Big Data?
6. What is Big Data analytics, and how does it benefit businesses?
7. List some real-world applications of Big Data.
8. What is the MapReduce programming model, and how is it used in Big Data processing?
9. Explain Matrix-Vector Multiplication by MapReduce.
10. How does the Hadoop ecosystem support Big Data analytics?

Unit 2: Hadoop Architecture

11. What is Apache Hadoop, and how does it fit into the Big Data ecosystem?
12. Describe the architecture of Hadoop.
13. What is the role of HDFS in Hadoop architecture?
14. What are some common Hadoop Shell commands?
15. Explain the anatomy of a file write and read operation in HDFS.
16. What is the function of NameNode, Secondary NameNode, and DataNode in Hadoop?
17. Describe the Hadoop MapReduce paradigm.
18. What is the difference between Map and Reduce tasks in Hadoop?
19. Explain the role of job and task trackers in the Hadoop cluster setup.
20. How do you configure Hadoop, and what are the key steps in HDFS administration?
21. What are the main tasks involved in monitoring and maintaining Hadoop clusters?

Unit 3: Hive and HiveQL, HBase

22. What is Hive, and how does it interact with Hadoop?
23. How does Hive architecture differ from traditional databases?
24. What is HiveQL, and how is it used for querying data in Hive?
25. How can you sort and aggregate data using HiveQL?
26. What is the role of MapReduce scripts in Hive?

Atmiya University
Rajkot

27. How do joins and subqueries work in HiveQL?
28. What is HBase, and how does it differ from traditional relational databases?
29. Describe the schema design and usage of HBase.
30. Explain advanced indexing techniques in HBase.
31. What is PIG, and how does it complement Hadoop?
32. How does Zookeeper work in the Hadoop ecosystem?
33. Describe the process of building applications with Zookeeper.

Unit 4: NoSQL Database

34. What is the difference between SQL and NoSQL databases?
35. What are the key features of MongoDB?
36. How do you interact with MongoDB through the JavaScript shell?
37. What is the role of core server tools in MongoDB?
38. How do you create and query indexes in MongoDB?
39. What are the principles of schema design in MongoDB?
40. How do you construct queries on MongoDB databases?
41. What are collections and documents in MongoDB?
42. What is the MongoDB Query Language (MQL), and how is it used?

Unit 5: Data Analytics Life Cycle

43. What is the Big Data Business Analytics life cycle?
44. What is the role of data scientists in Big Data analytics?
45. What are the key roles required for a successful analytics project?
46. Describe the main phases of the Big Data analytics life cycle.
47. How do you develop core deliverables for stakeholders in Big Data projects?
48. What challenges might arise during the implementation of Big Data analytics projects?
49. How do you measure the success of a Big Data analytics project?
50. What are the current trends in Big Data analytics and business intelligence?

Course Code	Course Name
18BTCECC403	Object Oriented Programing using c

Unit 1: Concepts of OOP

1. What is Object-Oriented Programming (OOP), and how does it differ from procedural programming?
2. What are the main principles of Object-Oriented Programming?
3. List and explain the benefits of Object-Oriented Programming.
4. Describe some real-world applications of OOP.
5. What is the program structure in C++? Explain the components.
6. What is a namespace in C++, and why is it used?
7. Define identifiers in C++ and explain the rules for creating valid identifiers.
8. What is the difference between variables and constants in C++?
9. What is an enum in C++, and how is it used?
10. Explain the types of operators available in C++ with examples.
11. What is typecasting in C++, and how is it different from implicit and explicit typecasting?
12. Describe the control structures available in C++ (if, switch, for, while, do-while) with examples.
13. How does a decision-making structure work in C++?
14. Explain the working of a loop structure in C++ with suitable examples.
15. How are conditional statements used to control the flow of a C++ program?

Unit 2: C++ Functions

16. What is a simple function in C++, and how is it defined and used?
17. What is the difference between call by value and call by reference in C++?
18. How is data passed by reference in C++ functions? Provide an example.
19. Explain the concept of inline functions in C++ and their advantages.
20. How do macro functions differ from inline functions? Which one is more efficient?
21. What is function overloading in C++, and how does it work?
22. What are default arguments in C++, and how are they used in functions?
23. Explain the concept of friend functions in C++ and provide an example.
24. What is a virtual function in C++? How does it support runtime polymorphism?
25. Explain the difference between a virtual function and a pure virtual function in C++.

Unit 3: Objects and Classes

26. What is the difference between an object and a class in C++?
27. How do you define a class in C++? Explain the syntax with an example.
28. What are private and public members in a class, and how do they differ?
29. What is a constructor in C++, and what are its types?
30. Explain the role of a destructor in C++ and how it is used.
31. What is the purpose of static data members and static functions in C++?

Atmiya University Rajkot

32. How does operator overloading work in C++? Provide an example of operator overloading.
33. What is type conversion in C++, and how can it be achieved?
34. What is the role of a copy constructor in C++? Provide an example.
35. How do you initiali□ e an object with default values using constructors in C++?

Unit 4: Inheritance

36. What is inheritance in C++, and why is it important in OOP?
37. Explain the different types of inheritance in C++: single, multiple, multilevel, hierarchical, and hybrid.
38. What is a protected member in a class, and how is it different from private and public members?
39. How does method overriding work in C++? Provide an example.
40. What is a virtual base class in C++, and how does it solve the diamond problem?
41. What is the difference between single inheritance and multiple inheritance in C++?
42. Explain the concept of hybrid inheritance in C++ with an example.
43. How can a derived class access the private members of a base class?
44. What is the role of the `virtual` keyword in inheritance in C++?
45. How do constructors and destructors behave in multiple inheritance?

Unit 5: Polymorphism

46. What is polymorphism in C++, and how is it implemented?
47. How are pointers used in C++? Provide examples of pointers to objects.
48. What is the `this` pointer in C++, and how does it work?
49. How do virtual functions support polymorphism in C++? Explain with an example.
50. What is the difference between a virtual function and a pure virtual function in the context of polymorphism?

Atmiya University
Rajkot

Course Code	Course Name
1 BTCEDC 04	Cloud Computing

Unit 1: Fundamentals of Cluster, Grid, and Cloud Computing

1. What is cluster computing?
2. Describe the architecture of cluster computing.
3. How are clusters classified?
4. What are some common applications of cluster computing?
5. What is Grid computing, and how did it originate?
6. What are the building blocks of Grid computing?
7. Mention some key applications of Grid computing.
8. What is cloud computing? Provide an overview.
9. Explain the roots of cloud computing.
10. What are the main service models in cloud computing?
11. Describe the different deployment models in cloud computing.
12. What are the benefits of using cloud computing?
13. What are the limitations of cloud computing?
14. What is a cloud ecosystem?
15. Compare and contrast cluster computing and Grid computing.

Unit 2: Cloud Technologies

16. What are the main layers of cloud computing?
17. Describe the architecture of cloud computing.
18. What is a hypervisor, and what role does it play in cloud computing?
19. Explain the concept of machine imaging in cloud computing.
20. What is virtualization, and why is it important in cloud computing?
21. How does load balancing work in a cloud environment?
22. What is virtual machine technology?
23. Describe the applications of virtualization in enterprise environments.
24. How does virtualization enhance resource utilization in cloud computing?
25. Compare the offerings of popular cloud providers like AWS, Google Cloud, and Azure.
26. Explain the difference between Type 1 and Type 2 hypervisors.
27. What are the key benefits of load balancing in cloud architectures?
28. How does machine imaging help in disaster recovery?
29. List some virtualization tools and their uses.
30. Why is virtualization considered a foundational technology in cloud computing?

Atmiya University Rajkot

Unit 3: Management, Monitoring, and MapReduce Programming

31. What is identity management in cloud computing?
32. How is access control implemented in cloud environments?
33. What is account monitoring, and why is it important in cloud systems?
34. What are user profiles in cloud computing, and how are they managed?
35. What is MapReduce, and how does it work?
36. Explain the programming model of MapReduce.
37. How is MapReduce implemented for cloud environments?
38. What are the key impacts of MapReduce on cloud computing?
39. What is the role of the filesystem in cloud computing?
40. Describe the architecture and purpose of Hadoop in cloud systems.
41. What are the main components of a MapReduce program?
42. How does MapReduce optimize data processing in cloud environments?
43. What are some real-world applications of Hadoop?
44. Explain the concept of "shuffling" in MapReduce.
45. How do user profiles influence resource allocation in cloud systems?

Unit 4: Cloud Security and Disaster Recovery

46. What are the primary security aspects in cloud computing?
47. What are the challenges and risks associated with cloud security?
48. Describe the security architecture for cloud systems.
49. What are some architectural considerations for securing the cloud?
50. How is data security ensured in cloud environments?
51. What are the key issues in securing cloud applications?
52. What is disaster recovery in cloud computing?
53. How are disaster recovery plans implemented in the cloud?
54. Why is application security critical in cloud systems?
55. Explain the concept of multi-tenancy and its security implications in the cloud.
56. What are some strategies for mitigating risks in cloud security?
57. How does encryption help in cloud data security?
58. Describe the role of backups in disaster recovery plans.
59. What is the shared responsibility model in cloud security?
60. How do recovery plans vary for different cloud deployment models?

Unit 5: Cloud Middleware and Case Studies

61. What is Amazon Web Service (AWS), and what are its primary features?
62. Describe the architecture and features of Eucalyptus.
63. What is Windows Azure, and how does it differ from AWS?
64. Explain the purpose of CloudSim in cloud computing research.
65. What is Aneka, and how is it used in cloud environments?
66. Describe the architecture of Google AppEngine.

67. How does CloudSim facilitate cloud simulation and testing?
68. Compare the features of AWS and Google AppEngine.
69. What are the main advantages of using Aneka for cloud-based applications?
70. How does Eucalyptus support private cloud deployment?
71. What types of applications are suitable for deployment on Google AppEngine?
72. Explain how Windows Azure provides support for hybrid cloud models.
73. What are the key differences between CloudSim and Aneka?
74. How does Amazon EC2 support scalability in cloud applications?
75. What is the role of middleware in cloud computing?

Atmiya University
Rajkot

Course Code	Course Name
18BTCECC703	Compiler Design

Unit 1: Fundamentals of Language Processors

1. What are the main activities involved in language processing?
2. Define language processors and explain their importance.
3. Describe the purpose and functionality of a linker and loader.
4. What is a macro processor, and how does it work?
5. Differentiate between an assembler, compiler, and interpreter.
6. List and describe the phases of a compiler.
7. What are cousins of the compiler? Provide examples.
8. Explain the grouping of compiler phases.
9. What are compiler-construction tools? Name any three and their uses.
10. What are the key challenges in designing a language processor?

Unit 2: Lexical and Syntax Analysis

11. Explain the role of a lexical analyzer in a compiler.
12. What is input buffering, and why is it important in lexical analysis?
13. How are tokens specified and recognized? Provide examples.
14. Describe the language used for specifying lexical analyzers.
15. Explain the process of converting a regular expression into a finite automaton (FA).
16. What is the difference between DFA and NFA?
17. How is a lexical analyzer generator designed?
18. What is DFA-based pattern matching optimization?
19. Define context-free grammars and their role in syntax analysis.
20. Explain recursive descent parsing and provide an example.
21. What is LL(1) parsing? Explain with an example.
22. Describe operator-precedence parsing in bottom-up parsing.
23. What are LR parsers? Differentiate between SLR, CLR, and LALR parsing.
24. How are ambiguous grammars used in parsing?
25. Describe parser generators and their role in error recovery.

Unit 3: Semantic Analysis and Intermediate Code

26. What are syntax-directed definitions (SDDs)? Provide an example.
27. Explain the construction of syntax trees with an example.
28. What is bottom-up evaluation of S-attributed definitions?
29. Define L-attributed definitions and their significance.
30. Explain the concept of top-down translation with an example.
31. How are inherited attributes evaluated in bottom-up parsing?

Atmiya University
Rajkot

32. What are the different variants of intermediate code?
33. Describe three-address code with examples.
34. What are syntax-directed translation (SDT) mechanisms?
35. Explain the concept of a Directed Acyclic Graph (DAG) and its use in compilers.

Unit 4: Run-Time Environment

36. What are source language issues in run-time environments?
37. Describe the different storage organization methods in compilers.
38. What are the various storage-allocation strategies? Provide examples.
39. How are non-local names accessed in a programming language?
40. What are the common parameter-passing mechanisms?
41. Explain the purpose and structure of a symbol table.
42. What are dynamic storage allocation techniques? Provide examples.
43. Define garbage collection and its role in memory management.
44. What are the challenges in implementing a run-time environment?
45. How does a compiler handle memory allocation for recursive functions?

Unit 5: Code Optimi□ ation and Generation

46. What are the methods of code optimization? Provide examples.
47. Describe the issues in the design of a code generator.
48. What is a target language in the context of code generation?
49. Explain the concepts of basic blocks and flow graphs in code optimization.
50. What is peephole optimization, and how does it improve code performance?

Atmiya University
Rajkot

Course Code	Course Name
1 BTCECC402	Computer Network

Unit 1: Introduction to Computer Networks and Physical Layer

1. What is a computer network, and why is it important?
2. List and explain the various applications of computer networks.
3. What is the difference between LAN, MAN, WAN, and internetworks?
4. Define network hardware. What are the different types of network hardware devices used in computer networks?
5. Explain the concept of network software and its role in managing computer networks.
6. What are the OSI/ISO and TCP/IP reference models? How do they differ from each other?
7. What are the layers in the OSI reference model, and what is the function of each layer?
8. How does the TCP/IP model differ from the OSI model in terms of layers?
9. What are some example networks that illustrate the OSI and TCP/IP models?
10. Define guided transmission media. Provide examples of guided media used in computer networks.
11. Explain wireless transmission and its importance in modern computer networks.
12. What is multiplexing, and how does it improve the efficiency of communication channels?
13. What is the Public Switched Telephone Network (PSTN), and how is it used in data communication?

Unit 2: Data Link Layer

14. What are the design issues in the data link layer?
15. How does error detection and correction work at the data link layer?
16. What are elementary data link protocols, and how do they operate?
17. Explain the concept of sliding window protocols and how they work in flow control.
18. What is HDLC (High-Level Data Link Control), and how is it used in data link communication?
19. Describe the Point-to-Point Protocol (PPP) and its role in the data link layer.
20. What is the channel allocation problem in the data link layer? Explain the MAC (Medium Access Control) mechanism.
21. List and explain the different MAC protocols used in networks.
22. What is Ethernet, and how does it work at the data link layer?
23. Explain the concept of wireless LANs (WLANs) and their advantages in networking.
24. What is broadband wireless, and how is it used in data transmission?
25. Describe the concepts of Bluetooth and RFID and their applications in computer networks.
26. What is data link layer switching, and how do repeaters, hubs, bridges, switches, routers, and gateways function in a network?
27. Explain the concept of virtual LANs (VLANs) and their benefits in network management.

Atmiya University Rajkot

Unit 3: Network Layer

28. What are the design issues in the network layer of the OSI model?
29. Explain the distance vector routing algorithm and its limitations.
30. How does the link-state routing algorithm work, and how does it differ from distance vector routing?
31. What are congestion control algorithms, and why are they necessary in the network layer?
32. How does Quality of Service (QoS) work in the network layer to ensure reliable communication?
33. Explain the role of the network layer in the Internet. How does it manage data routing and forwarding?
34. What is IPv4, and how does it work in a computer network? Describe its addressing scheme.
35. What is subnetting in IPv4, and how is it used to divide a network into smaller sub-networks?
36. What are the key features of IPv6, and how does it differ from IPv4?
37. Explain the function of the Internet Control Message Protocol (ICMP) in the network layer.
38. What is ARP (Address Resolution Protocol), and how does it map IP addresses to MAC addresses?
39. Explain RARP (Reverse Address Resolution Protocol) and its use in mapping MAC addresses to IP addresses.
40. What is BOOTP (Bootstrap Protocol), and how does it help in the initial booting of a computer in a network?
41. Describe DHCP (Dynamic Host Configuration Protocol) and its role in assigning dynamic IP addresses to devices on a network.

Unit 4: Transport Layer

42. What are the functions and services provided by the transport layer in the OSI model?
43. Explain the concepts of multiplexing and demultiplexing at the transport layer.
44. What is the User Datagram Protocol (UDP), and how does it differ from TCP?
45. How does the Transmission Control Protocol (TCP) provide reliable communication in a network?
46. Describe the process of flow control and error control in TCP.
47. What are the principles of congestion control in the transport layer? Explain different congestion control mechanisms.
48. What is the significance of the sliding window protocol in TCP for congestion control?

Unit 5: Application Layer

49. What is DNS (Domain Name System), and how does it resolve domain names to IP addresses?
50. Explain how Electronic Mail (Email) works over computer networks. What protocols are involved in email communication?

Atmiya University
Rajkot

Course Code	Course Name
1 BTCECC303	Computer Organization

Unit 1: Basic Computer Organi ation and Design

1. What is Register Transfer Language (RTL), and how is it used in computer organization?
2. Explain the concept of Bus and Memory Transfer in computer architecture.
3. What is a Three-State Bus Buffer, and how does it work in memory transfer?
4. What are the different types of computer registers, and what is their role in computer organization?
5. Define the term "Instruction Code" and describe its role in computer processing.
6. What is an Arithmetic Micro-operation, and how is it performed in the ALU?
7. Explain what Logic Micro-operations are and how they are used in computer systems.
8. Describe what Shift Micro-operations are and give an example of their use.
9. What is the role of the Arithmetic Logical Unit (ALU) in a computer system?
10. How are computer instructions classified, and what are the different types of instructions?
11. What is the timing and control unit in computer organization?
12. Describe the stages involved in the Instruction Cycle.
13. What are Memory-Reference Instructions, and how do they interact with memory?
14. Explain Register-Reference Instructions and their importance in computer operations.
15. What are Input-Output Instructions and how do they work in a computer system?
16. What is the role of interrupts in computer organization?
17. Describe the design considerations for a computer's accumulator.
18. How does the design of an accumulator influence the performance of a computer?

Unit 2: Central Processing Unit (CPU)

19. Explain the concept of Register Organization in the CPU.
20. What is Stack Organization, and why is it used in the CPU?
21. What are the different instruction formats used in computer architecture?
22. How do Addressing Modes work, and why are they important for instruction execution?
23. Describe the different classifications of instructions in a CPU, such as Data Transfer, Data Manipulation, and Program Control.
24. What are the characteristics of RISC (Reduced Instruction Set Computing) and CISC (Complex Instruction Set Computing) architectures?
25. How does machine language differ from assembly-level language?
26. Explain the role of an assembler in computer systems and the different types of assemblers.
27. What are the key differences between RISC and CISC in terms of performance and design?
28. How is an instruction set organized in a RISC machine?
29. What are the advantages of using stack organization in CPU design?

Atmiya University Rajkot

Unit 3: Pipelining and Computer Algorithms

30. What is Flynn□s Taxonomy, and how does it classify different types of computer architectures?
31. Describe the concept of parallel processing and how it improves computational efficiency.
32. What is pipelining, and how does it improve the performance of a CPU?
33. How does Arithmetic Pipelining work, and what is its significance in computer operations?
34. Explain Instruction Pipelining and its role in increasing instruction throughput.
35. What is RISC pipelining, and how does it differ from CISC pipelining?
36. Describe the addition algorithm used in pipelining.
37. Explain how subtraction is performed using pipelining.
38. What are the key differences between multiplication algorithms and their implementation in pipelined architectures?
39. How is division handled in pipelined processors?
40. Describe the role of floating-point operations in modern computer architectures.

Unit 4: Memory Organi□ ation

41. What is the concept of memory hierarchy, and how does it impact system performance?
42. Explain the structure and function of main memory in a computer system.
43. What is auxiliary memory, and how does it differ from main memory?
44. What is associative memory, and what are its key advantages over other types of memory?
45. Describe cache memory and its role in speeding up data access.
46. What is virtual memory, and how does it extend the capacity of physical memory?
47. How does memory hierarchy optimize the use of available memory in a system?
48. What are the different types of memory in a computer system, and how do they interact with one another?

Unit 5: Input-Output Organi□ ation and Processors

49. What is an Input-Output (I/O) interface, and how does it facilitate communication between the CPU and peripheral devices?
50. Describe the different modes of data transfer in I/O operations (e.g., Programmed I/O, Interrupt-driven I/O, DMA).
51. What is asynchronous data transfer, and how does it differ from synchronous data transfer?
52. Explain Direct Memory Access (DMA) and how it improves I/O performance.
53. What is an Array Processor, and how is it used in parallel computing?
54. What is an Input-Output Processor (IOP), and what role does it play in I/O operations?
55. Explain the concept of a multiprocessor system and its advantages in computational efficiency.
56. What is cache coherence in multiprocessor systems, and why is it important?

Atmiya University Rajkot

57. How do multiprocessor systems handle synchronization issues related to shared memory?

Atmiya University
Rajkot

Course Code	Course Name
18BTCECC201	Computer Programing

Unit 1: Introduction to Computer and Programming

1. Draw and explain the block diagram of a computer system.
2. Explain the role of each component in the block diagram of a computer.
3. Differentiate between hardware and software in a computer system.
4. Describe the three main types of programming languages with examples.
5. Compare and contrast high-level and low-level programming languages.
6. Define an algorithm and list its characteristics.
7. Explain the importance of flowcharts in problem-solving.
8. Create a flowchart for finding the largest of three numbers.
9. Discuss the top-down approach to problem-solving with an example.
10. Explain the bottom-up approach to problem-solving with an example.
11. Convert the binary number `101101` to decimal.
12. Convert the decimal number `56` to binary.
13. What is the hexadecimal number system? Convert the decimal number `255` to hexadecimal.
14. Compare the binary and octal number systems.
15. What are the advantages of using algorithms and flowcharts in programming?

Unit 2: Fundamentals of C

16. List the C character set and explain its significance in programming.
17. Define identifiers and keywords with examples.
18. What are data types in C? List and explain the primary data types.
19. Define a variable. How do you declare and initiali□ e a variable in C?
20. Differentiate between constants and variables in C.
21. Write short notes on symbolic constants in C.
22. Explain the structure of a C program with an example.
23. What are operators in C? Explain arithmetic, relational, and logical operators.
24. Explain operator precedence and associativity in C with examples.
25. Describe type conversion in C. Differentiate between implicit and explicit type conversion.
26. What are library functions in C? Provide examples.
27. Explain data input and output functions in C with examples.
28. Write a C program to find the sum of two numbers using `scanf()` and `printf()`.
29. What are storage classes in C? Explain the four types of storage classes.
30. Explain branching statements in C with examples.
31. What are looping statements in C? Discuss the `for`, `while`, and `do-while` loops with examples.

Atmiya University Rajkot

32. Explain the use of the `switch` statement in C with a program example.
33. What is the purpose of the `break`, `continue`, and `goto` statements in C?

Unit 3: Arrays and Strings

34. Define an array. How is it declared and initialized in C?
35. Explain how arrays are processed in C with an example program.
36. Describe multidimensional arrays. Write a program to calculate the sum of elements in a 2D array.
37. How can an array be passed to a function in C? Provide an example.
38. Define a string in C. How is it declared and initialized?
39. Write a program in C to reverse a string entered by the user.
40. Discuss the use of standard string functions like `strlen()`, `strcpy()`, and `strcat()`.
41. Write a C program to find the length of a string without using `strlen()`.

Unit 4: Functions

42. Define a function in C. Explain how to declare and define a function.
43. What is a function prototype? Why is it necessary?
44. Explain the difference between call by value and call by reference in C.
45. Write a C program to calculate the factorial of a number using recursion.
46. Explain recursion with its advantages and disadvantages.
47. Discuss the scope and lifetime of variables in functions.
48. How are arguments passed to a function? Give an example program.

Unit 5: Structures and Pointers

49. Define a structure in C. How is it declared and accessed?
50. Explain how an array of structures is created and accessed in C.
51. Differentiate between a structure and a union in C.
52. Write a program to store and display student details using a structure.
53. Explain pointer operators with examples.
54. Write a program to demonstrate pointer arithmetic in C.
55. How are pointers and arrays related? Explain with an example.
56. Write a program to pass a pointer to a function.
57. Explain how pointers can be used with structures. Provide a suitable example.
58. Discuss the advantages and disadvantages of using pointers in programming.

Faculty of Engineering and Technology
Department of Computer Engineering

B.Tech. SEM.-III
Subject: Database Management System(18BTCECC301)
Question Bank

Unit: 1

Sr. No.	Question	Mark
1	Explain responsibility of DBA in detail.	4
2	Explain three level Data abstraction.	4
3	Explain Different types of Keys in DBMS with examples.	4
4	Explain Specialization, Generalization and Aggregation with diagrams.	7
5	Explain advantages of DBMS over file management systems.	7
6	Explain Weak entity set and Strong entity set.	4
7	Explain disadvantages of the file system compared to the Database management system.	7
8	Explain applications of DBMS	4
9	Explain Data Models in brief.	4

Unit: 2

Atmiya University

Faculty of Engineering and Technology
Department of Computer Engineering

Sr. No.	Question	Mark
1	What is Relational Algebra? Explain selection, Projection and Cartesian product operation.	5
2	What is normalization? What is the need of it? Also Explain 1NF,2NF and 3NF with examples.	7
3	Define functional dependency. Explain different types of FD with the help of example.	7
4	What Is decomposition? Explain different types of decomposition.	7
5	Describe Structure of relational databases.	5
6	Explain closure of FD set	5

Atmiya University

Unit: 3

<table>
<tr><th>Sr. No.</th><th>Question</th><th>Mark</th></tr>
<tr><td>1</td><td>Explain State Transition Diagram.</td><td>5</td></tr>
<tr><td>2</td><td>Define Locking. Explain lock-based protocol.</td><td>7</td></tr>
<tr><td>3</td><td>Find out the following schedule is Conflict Serializable or not. And also describe its steps.
<table>
<tr><td>T1</td><td>T2</td></tr>
<tr><td>R(A)</td><td></td></tr>
<tr><td></td><td>R(A)</td></tr>
<tr><td></td><td>R(B)</td></tr>
<tr><td></td><td>W(B)</td></tr>
<tr><td>R(B)</td><td></td></tr>
<tr><td>W(A)</td><td></td></tr>
</table></td><td>5</td></tr>
<tr><td>4</td><td>What is a transaction? List and explain ACID property of transaction with example.</td><td>5</td></tr>
<tr><td>5</td><td>Explain conflict serializability and view serializability with Example.</td><td>7</td></tr>
<tr><td>6</td><td>What are the three problems due to concurrency? How the problems can be avoided.</td><td>5</td></tr>
</table>

Atmiya University

Unit: 4

Sr. No.	Question	Mark
1	Explain system recovery procedure with Checkpoint record concept.	7
2	Explain Shadow Paging Technique.	5
3	Explain working of two-phase commit protocol.	5
4	Explain Query Processing in detail.	7
5	Explain Deferred Database Modification log-based recovery method.	7
6	Discuss Immediate Database Modification log based recovery method.	7
7	What is a deadlock? Explain wait-for-graph. When does it occur?	7
8	Explain deadlock Detection, Recovery and prevention methods.	7

Atmiya University

Unit: 5

Sr. No.	Question	Mark
1	What are SQL Constraints? And also explain its types.	5
2	Explain TCL Commands with syntax and examples.	5
3	Explain Aggregate Functions with syntax and examples.	5
4	Explain Order by, group by and Having with syntax and example.	7
5	Explain Numeric and String Functions.	5
6	Explain View and its types with syntax and examples.	7
7	What is Join? Define its types. And explain Inner join in detail.	7

Atmiya University

Course Code	Course Name
18BTCEDC801	Distributed Database Management System

Unit 1: Introduction to Distributed DBMS

1. What is distributed data processing?
2. How does distributed data processing differ from centralized data processing?
3. What are the main promises of Distributed DBMS (DDBMS)?
4. Why is DBMS standardization important in distributed systems?
5. Explain the different architectural models for Distributed DBMS.
6. What are the key components of the Distributed DBMS architecture?
7. What is the role of a Distributed DBMS in modern database systems?
8. What are the alternative design strategies for Distributed DBMS?
9. How does the distribution design issue impact the performance of a Distributed DBMS?
10. What are the various types of fragmentation in Distributed DBMS?
11. What is distribution transparency, and why is it important in Distributed DBMS?
12. How is data fragmentation achieved in distributed database design?

Unit 2: Query Processing and Optimi□ ation

13. What is the objective of query processing in a database system?
14. Explain the complexity of relational algebra operations.
15. How does query processing work in a centralized DBMS?
16. How is query processing different in a distributed DBMS?
17. What are the key characteristics of query processors in a distributed DBMS?
18. List and explain the layers of query processing in a DBMS.
19. What is query optimization, and why is it important?
20. What are the challenges in query optimization for distributed DBMS?
21. Explain centralized query optimization and its techniques.
22. How does join ordering impact query optimization in fragmented queries?
23. What are the major algorithms for distributed query optimization?
24. How does distributed query optimization differ from centralized query optimization?

Unit 3: Transaction Management and Concurrency Control

25. What is a transaction in a Distributed DBMS?
26. Define the ACID properties of a transaction in database systems.
27. What are the types of transactions in a Distributed DBMS?
28. What is serializability theory, and why is it important in transaction management?
29. What are the different types of concurrency control mechanisms?
30. Explain the concept of lock-based concurrency control mechanisms.

Atmiya University Rajkot

31. How does timestamp-based concurrency control work in Distributed DBMS?
32. What is deadlock management, and how is it handled in distributed systems?
33. How does a Distributed DBMS ensure transaction consistency in the presence of concurrency?
34. Explain the role of a concurrency control manager in a Distributed DBMS.

Unit 4: Distributed DBMS Reliability

35. What are the key concepts and measures of reliability in Distributed DBMS?
36. What are the common types of failures that occur in distributed systems?
37. How is fault tolerance achieved in Distributed DBMS?
38. What types of failures can occur in Distributed DBMS?
39. How does a Distributed DBMS handle site failures?
40. What is network partitioning, and how does it affect Distributed DBMS?
41. Explain local reliability protocols used in distributed systems.
42. What are distributed reliability protocols, and how do they ensure system stability?
43. How does a Distributed DBMS recover from failures?
44. Describe the techniques used for ensuring data consistency in a distributed environment.

Unit 5: Parallel Database Systems and Database Interoperability

45. What are database servers, and how do they function in parallel database systems?
46. Explain the different types of parallel architectures used in database systems.
47. What are the main techniques used in Parallel DBMS?
48. What are the problems associated with parallel execution in database systems?
49. How is parallel execution handled in hierarchical database architectures?
50. What is database integration, and why is it important in the context of parallel and distributed databases?
51. How is query processing handled in parallel database systems?
52. What role does transaction management play in parallel database systems?
53. Explain the concept of Object Orientation in database interoperability.
54. How does interoperability between different databases work in distributed systems?
55. What are the challenges in ensuring smooth interoperability in distributed databases?

Course Code	Course Name
18BTCEDC801	Data Mining & Data Warehousing

Unit 1: Overview of Data Mining and Data Warehousing

1. What is the importance of data mining?
2. Why is data warehousing important?
3. List the major issues in data mining.
4. What are the key challenges in data warehousing?
5. Mention some applications of data mining and data warehousing.
6. What are the basic elements of a data warehouse?
7. Differentiate between OLAP and OLTP.
8. What are the primary OLAP operations?
9. Describe the roll-up and drill-down operations in OLAP.
10. What is the slice operation in OLAP?
11. Explain the dice operation in OLAP.
12. Define pivoting in OLAP.
13. What are the different OLAP models?
14. Describe the star schema.
15. What is a snowflake schema?
16. Explain fact constellation schema with an example.

Unit 2: The Architecture of Data Mining and Data Warehousing

17. What is the three-tier architecture of data warehousing?
18. Explain the roles of each layer in the three-tier architecture.
19. What is the architecture of a data mining system?
20. How is a data mining system integrated with a database or warehouse?
21. What are data mining task primitives?
22. Define knowledge discovery in databases (KDD).
23. Describe the main steps in the KDD process.
24. What is the role of the data warehouse in data mining architecture?
25. What is the difference between a client/server and a three-tier architecture in data warehousing?
26. What is metadata in the context of data warehousing?

Unit 3: Data Preprocessing

27. Why is data preprocessing important in data mining?
28. What are the different steps in data preprocessing?

29. How is missing data handled during preprocessing?
30. What methods can be used for handling noisy data?
31. What is data integration, and why is it important?
32. Explain the process of data transformation with an example.
33. What is data reduction, and why is it necessary?
34. Describe the concept of data discretization.
35. What is the role of data hierarchy in data preprocessing?
36. Give an example of data cleaning in real-world scenarios.

Unit 4: Concept Description and Association Rule

37. What is concept description in data mining?
38. Explain the importance of attribute relevance in data mining.
39. What is generalization in the context of concept description?
40. What is association rule mining?
41. Describe the process of market basket analysis.
42. What is the frequent itemset in association rule mining?
43. Explain the working of the Apriori algorithm.
44. How are association rules generated using the Apriori algorithm?
45. Provide an example of a real-world scenario where association rule mining is applied.
46. What are the challenges in association rule mining?

Unit 5: Classification and Clustering

47. What is classification in data mining?
48. Explain the decision tree method for classification.
49. What is rule-based classification?
50. Define Bayes theorem and its application in classification.
51. What is the Na ve Bayes classification?
52. What are the advantages of Na ve Bayesian classification?
53. What is clustering in data mining?
54. Differentiate between classification and clustering.
55. Explain the K-means clustering algorithm.
56. What are the limitations of K-means clustering?
57. Describe the K-medoid clustering algorithm.
58. How do K-means and K-medoid clustering differ?
59. What is the importance of clustering in data mining?
60. Provide examples of real-world applications of clustering.

Q-68 In a geared system shown in figure, the mass moment of inertia of rotor A and B are 2 kg □ m^2 and 0.3 kg □ m^2. The gear ratio between rotor B and A is 3. Calculate the node position and natural frequency of torsional oscillations. Ignore the inertia of the gears and shafts. Take modulus of rigidity of shaft material as 80 □ 10^9 N/m^2.

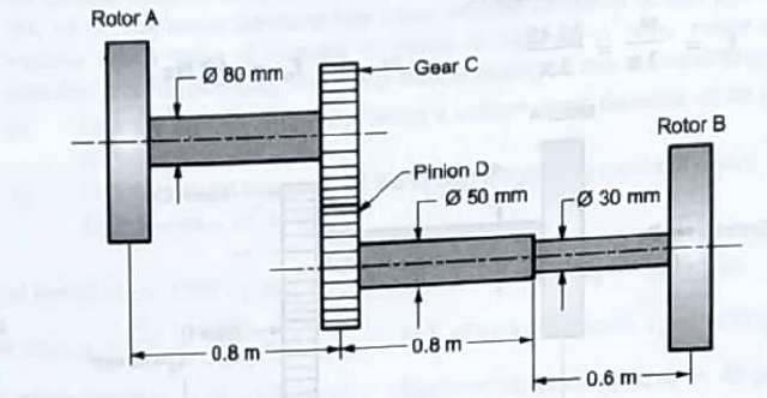

Q-69 A shaft of negligible weight 6 cm diameter and 5 meter long is simply supported at the ends and carries four weights 50 kg each at equal distance over the length of the shaft. Find the frequency of vibration by Dunkerley□s method. Take E = 2 □ 10^6 kg / cm^2.

Q-70 Explain the method to determine the critical speed of shafts carrying single rotor neglecting damping.

UNIT □ V Vibration Measurement and Suspension system

Q-71 Why the measurement of vibration is necessary? Explain the basic features of vibration measurement process. How vibration measuring instruments are classified?

Q-72 List the various types of amplitude measuring instruments? Explain working principle of stylus recording instrument, seismometer and optical recording instrument with neat sketch.

Q-73 Explain the working Principle of Accelerometers.

Q-74 A vibrometer consists of a seismic mass of 1 kg, spring of stiffness 50 N/m and a damping factor of 0.7. The amplitude of displacement shown on vibrometer scale is 10 mm. If the vibrometer is mounted on a machine vibrating at 30 rad/sec, determine the amplitude of vibration of a machine.

Q-75 A vibrometer has a period of free vibration of 2 seconds. It is attached to a machine with a vertical harmonic frequency of 1 Hz. If the vibrometer mass has an amplitude of 2.5 mm relative to the vibrometer frame. What is the amplitude of vibration of machine?

Atmiya University Rajkot

Course Code	Course Name
18BTCECC302	Data Structure

Unit 1: Introduction to Data Structure and File

1. What is the definition of a data structure, and why are data structures important?
2. What are the differences between primitive and non-primitive data structures?
3. Explain the concept of time complexity and space complexity in algorithm analysis.
4. What are the different cases (best case, worst case, average case) in time complexity analysis?
5. Describe the difference between linear and non-linear data structures.
6. How do arrays get represented in memory?
7. List the common applications of arrays in data structures.
8. What is a sparse matrix, and how is it represented?
9. What is the significance of file handling in programming?
10. How do you open and close a file in a program?
11. What are the basic input/output operations performed on a file?
12. What is the difference between reading and writing to a file?
13. What are the key advantages of using data structures like arrays in solving real-world problems?
14. What are the trade-offs between time complexity and space complexity when choosing an algorithm?
15. How can you implement a file read/write operation in C or Java?

Unit 2: Linear Data Structure - Stack, Queue

16. What is a stack, and how is it represented in memory?
17. What are the basic operations that can be performed on a stack?
18. Describe the concept and applications of stacks in data structures.
19. What is a Polish Expression, and how is it related to stack operations?
20. What is a Reverse Polish Expression, and how is it evaluated using a stack?
21. Explain recursion and provide an example where recursion is used in algorithms.
22. What is the Tower of Hanoi problem, and how can it be solved using recursion?
23. Define a queue and explain its representation in memory.
24. What operations can be performed on a queue?
25. What are some common applications of queues in computing?
26. What is a circular queue, and how does it differ from a regular queue?
27. Explain the concept of a priority queue and how it is used in scheduling tasks.
28. What is a double-ended queue (deque), and how does it differ from other types of queues?
29. How does a circular queue solve the problem of wasted space in a queue?
30. How is recursion implemented in the context of the Tower of Hanoi problem?

Unit 3: Linear Data Structure - Linked List

31. Why is dynamic memory allocation necessary in programming?

32. How do functions like `malloc`, `calloc`, and `realloc` allocate memory dynamically in C?
33. How does `free()` work in deallocating memory in C or C++?
34. What are the advantages of using a linked list over an array for storing data?
35. What are the applications of linked lists in real-world scenarios?
36. Explain the structure of a singly linked list and how it is implemented.
37. How is a doubly linked list different from a singly linked list?
38. What is a circular linked list, and how is it implemented?
39. How can you implement a stack using a linked list?
40. How can a queue be implemented using a linked list?
41. What are the key differences between arrays and linked lists in terms of memory management?
42. Explain how the linked list can be used to implement other data structures, like a stack or queue.

Unit 4: Nonlinear Data Structures

43. What is a tree, and how is it represented in memory?
44. What is the structure of a binary tree, and how are nodes represented?
45. Explain the different types of binary tree traversals: inorder, preorder, and postorder.
46. What is a threaded binary tree, and how does it differ from a regular binary tree?
47. What is a binary search tree (BST), and how does it help with searching operations?
48. How do you convert a general tree into a binary tree?
49. What are AVL trees, and how do they maintain balance?
50. What are B-Trees and 2-3 Trees, and in what scenarios are they used?
51. Explain the difference between DFS (Depth First Search) and BFS (Breadth First Search) graph traversal techniques.
52. How are graphs represented in memory using an adjacency matrix?
53. What are the applications of depth-first and breadth-first search algorithms?
54. What is a spanning tree, and how is it used in graph theory?
55. Explain Kruskal's and Prim's algorithms for finding the minimum spanning tree.
56. How does Dijkstra's algorithm help in finding the shortest path in a graph?

Unit 5: Sorting, Searching, and Hashing

57. What is sorting, and why is it an important operation in data structures?
58. Explain the Bubble Sort algorithm and its time complexity.
59. How does Insertion Sort work, and in which cases is it most efficient?
60. What is Selection Sort, and how does it compare with other sorting algorithms in terms of time complexity?
61. What is linear search, and when should it be used in searching for data?
62. Describe how binary search works and its advantages over linear search.
63. What is hashing, and why is it important in data management?
64. What is a symbol table, and how is it used in hashing?
65. What are hashing functions, and how do they work?
66. Explain the concept of collision resolution techniques in hashing.
67. What are the different types of collision resolution methods, like chaining and open addressing?

Atmiya University Rajkot

68. How does a hash table work, and what are its advantages in searching?

Atmiya University
Rajkot

Atmiya University

Faculty of Engineering and Technology

Department of Mechanical Engineering

Semester- 4

Important Questions for CIA - I

Course Name: Design of Transmission Systems

Course Code: 21BTMECC404

Unit – II Design of Bearing	
Q-1	Explain in brief different modes of lubrication in sliding contact bearing with diagram.
Q-2	Obtain the equation of coefficient of friction (petroff's equation) for sliding contact bearing
Q-3	Explain the performance of a hydrodynamic bearing with neat curve of coefficient of friction versus bearing characteristic number.
Q-4	Obtain the relation for viscosity of lubricant for journal bearing.
Q-5	Classify different types of sliding & rolling contact bearing. Explain any one in brief with its applications, advantages and limitations.
Q-6	List and explain the design parameters required in the preliminary stages of bearing design.
Q-7	Compare sliding contact bearing and rolling contact bearing.
Q-8	Explain the static load capacity, dynamic load capacity and equivalent bearing (dynamic) load capacity of rolling contact bearing.
Q-9	Explain the load – life relationship for rolling contact bearing.
Q-10	Explain the causes and remedies of bearing failure.
Q-11	Obtain an equation for static load carrying capacity for rolling contact bearing.

Q-12	**The following data is given for a 360^0 hydrodynamic bearings:** **Radial load : 3.1 kN** **Journal diameter : 50 mm** **Bearing length : 50 mm** **Journal speed : 1440 rpm** **Radial clearance : 50 microns** **Viscosity of lubricant : 25 cP** **Density of lubricant : 860 kg / m^3** **Sp. Heat of lubricant : 1.76 kJ / kg ^{0}C** **Assuming that the total heat generated in the bearing is carried by the total oil flow in the bearing. Find:** **i) Sommerfeld Number** **ii) Minimum oil-film thickness** **iii) The coefficient of friction** **iv) The power lost in friction** **v) The total flow rate of lubricant in litre/minute** **vi) Side leakage**
Q-13	**The following data is given for a full hydrodynamic bearing used for electric motor:** **Radial load = 1200 N** **Journal speed = 1440 rpm** **Journal diameter = 50 mm** **Static load on the bearing = 350 N** **The values of surface roughness of the journal and the bearing are 2 and 1 micron respectively. The minimum oil film thickness should be five times the sum of surface roughness of the journal and the bearings. Determine** **(i) Length of the bearing** **(ii) Radial clearance** **(iii) Minimum oil film thickness** **(iv) Viscosity of lubricant** **(v) Flow of lubricant.** **Select suitable oil for this application assuming the operating temperature as 65□C.**

Atmiya University
Rajkot

Q-14	The following data is given for a 360 hydrodynamic bearing: radial load = 10 kN journal speed = 1440 rpm unit bearing pressure = 1000 kPa clearance ratio (r/c) = 800 viscosity of lubricant = 30 mPa s Assuming that the total heat generated in the bearing is carried by the total oil flow in the bearing, Find: (i) dimensions of bearing (ii) coefficient of friction (iii) power lost in friction (iv) total flow of oil (v) side leakage (vi) temperature rise
Q-15	Single-row deep groove ball bearing is subjected to a pure radial force of 3 kN from a shaft that rotates at 600 rpm. The expected Life L10h of the bearing is 30000 h. The minimum acceptable diameter of the shaft is 40 mm. Select a suitable ball bearing for this application.
Q-16	A single-row deep groove ball bearing is subjected to a radial force of 8 kN and a thrust force of 3 kN. The shaft rotates at 1200 rpm. The expected life L10h of the bearing is 20000 h. The minimum acceptable diameter of the shaft is 75 mm. Select a suitable ball bearing for this application.
Q-17	A single-row deep groove ball bearing No. 6002 is subjected to an axial thrust of 1000 N and a radial load of 2200 N. Find the expected life that 50% of the bearings will complete under this condition.
Q-18	A single-row deep groove ball bearing has a dynamic load capacity of 40500 N and operates on the following work cycle: (i) Radial load of 5000 N at 500 rpm for 25% of the time (ii) Radial load of 10000 N at 700 rpm for 50% of the time; and (iii) Radial load of 7000 N at 400 rpm for the remaining 25% of the time. Find the expected life of the bearing in hours.
Q-19	A ball bearing is operating on a work cycle consisting of three parts a radial load of 3000 N at 1440 rpm for one quarter cycle, a radial load of 5000 N at 720 rpm for one half cycle, and radial load of 2500 N at 1440 rpm for the remaining cycle. The expected life of the bearing is 10 000 h. Calculate the dynamic load carrying capacity of the bearing.

Atmiya University
Rajkot

Q-20	**A single-row deep groove ball bearing is subjected to a 30 second work cycle that consists of the following two parts:** *Part I* / *Part II* *duration (s)* 10 / 20 *radial load (kN)* 45 / 15 *axial load (kN)* 12.5 / 6.25 *speed (rpm)* 720 / 1440 **The static and dynamic load capacities of the ball bearing are 50 and 68 kN respectively. Calculate the expected life of the bearing in hours.**
Q-21	**A single-row deep groove ball bearing is subjected to a radial force of 8 kN and a thrust force of 3 kN. The values of X and Y factors are 0.56 and 1.5 respectively. The shaft rotates at 1200 rpm. The diameter of the shaft is 75 mm and Bearing No. 6315 (C =112 000 N) is selected for this application.** **(i) Estimate the life of this bearing, with 90% reliability.** **(ii) Estimate the reliability for 20 000 h life.**
Q-22	**Single-row deep groove ball bearing is used to support the lay shaft of a four speed automobile gear box. It is subjected to the following loads in respective speed ratios:** *Gear* / *Axial load (N)* / *Radial load (N)* / *% time engaged* First gear 3250 4000 1% Second gear 500 2750 3% Third gear 50 2750 21% Fourth gear Nil Nil 75% **The lay shaft is fixed to the engine shaft and rotates at 1750 rpm. The static and dynamic load carrying capacities of the bearing are 11600 and 17600 N respectively. The bearing is expected to be in use for 4000 hours of operation. Find out the reliability with which the life could be expected.**
Unit – I Design of flexible machine elements	
Q-23	**Explain the different types of belt drive used in industry. Also write the advantages and disadvantages of belt drive over other drives.**
Q-24	**Obtain the equation for length of open belt drive with neat sketch.**
Q-24	**Show that equation for length of cross belt drive is given by** $L = \pi/2 (d_1 + d_2) + 2x + (d_1+d_2)^2/4x$
Q-25	**Explain the selection of flat belt from manufacturer's catalogue with necessary equation.**

Atmiya University Rajkot

Q-26	**Write step by step procedure for the selection of V - belt giving all governing equations.**
Q-27	**Explain the construction of roller chain with a neat sketch.**
Q-28	**Explain the geometric relationships for roller chain with suitable equation.**
Q-29	**It is required to select a flat belt drive for a compressor running at 720 rpm, which is driven by a 25 kW, 1440 rpm motor. Space is available for a centre distance of 3 m. The belt is open-type. the load correction factor for the compressor is 1.3. Selecting a HI-SPEED belt.**
Q-30	**It is required to design a V-belt drive to connect a 7.5 kW, 1440 rpm induction motor to a fan, running at approximately 480 rpm, for a service of 24 h per day. Space is available for a centre distance of about 1 m.**
Q-31	**It is required to select a Vbelt drive to connect a 15 kW, 2880 rpm normal torque A.C. motor to a centrifugal pump, running at approximately 2400 rpm, for a service of 18 hours per day. The centre distance should be approximately 400 mm. Assume that the pitch diameter of the driving pulley is 125 mm.**
Q-32	**Explain the step by step design procedure for selection of roller chain with necessary equation.**
Q-33	**Explain the uses and construction of wire ropes.**
Q-34	**The layout of a leather belt drive transmitting 15 kW of power is shown in figure. The centre distance between the pulleys is twice the diameter of the bigger pulley. The belt should operate at a velocity of 20 m/s approximately and the stresses in the belt should not exceed 2.25 N/mm^2. The density of leather is 0.95 g/cc and the coefficient of friction is 0.35. The thickness of the belt is 5 mm. Find:** **(i) The diameter of pulleys** **(ii) The length and width of the belt** **(iii) The belt tensions**

3-Ply	25	40	50	63	76					
4-Ply	40	44	50	63	76	90	100	112	125	152
5-Ply	76	100	112	125	152					
6-Ply	112	125	152	180	200					

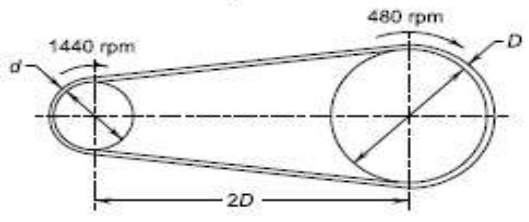

Atmiya University
Rajkot

Q-35	**A chain drive is to be used to transmit 5 kW power from an electric motor running at 1000 rpm to a machine running at 500 rpm. The service conditions involve light shock.** **Assume service factor as 1.3, tooth correction factor as 1, multiple strand factor as 1 for the given application.** **1. Select a standard roller chain** **2. Determine the pitch circle diameters of driving and driven sprockets** **3. Determine the length of the chain** **4. Specify the correct centre distance between the axes of sprockets**

Atmiya University
Rajkot

Atmiya University

Faculty of Engineering & Technology

Department of Mechanical Engineering

Semester- 4

Important question for CIA - II

Course Name: Design of Transmission Systems

Course Code: 21BTMECC404

Unit – III Design of Gears	
Q-1	List the classification of gear. Explain the practical application of any one of the gear with proper justification.
Q-2	Explain beam strength of spur gear tooth with suitable equations and neat sketch.
	Explain buckingham's theory for wear strength of spur gear tooth.
Q-3	Explain the following terms 1. Interference 2. Undercutting 3. Backlash 4. Pressure angle 5. Module 6. Pitch circle diameter 7. Addendum 8. Circular pitch 9. Tooth space
Q-4	Show that the common normal to the tooth profile at the point of contact should always pass through a fixed point, called the pitch point, in order to obtain a constant velocity ratio.
Q-5	Explain in brief about different types of material used for gear.
Q-6	List the difference between involute and cycloidal profile in gear.
Q-7	With the help of neat sketch, state and explain the component of force acting on helical gears.
Q-8	Explain different types of gear tooth failures, causes and their possible remedies.
Q-9	What are the advantages and disadvantages of helical gears?

Q-10	Explain beam strength of helical gear tooth with suitable equations and neat sketch.
Q -11	Explain buckingham's theory for wear strength of helical gear tooth.
Q -12	Explain the following helical gear terminology with equation. 1. Helix angle 2. Transverse circular pitch & transverse module 3. Normal circular pitch & normal module 4. Axial Pitch 5. Transverse pressure angle 6. Normal pressure angle 7. Face width 8. Speed ratio or gear ratio 9. Centre distance 10. Tooth Proportions
Q -13	A pair of helical gears consists of 18 teeth pinion meshing with 45 teeth gear. The normal module is 5, while the normal pressure angle is 20°. If the helix angle is 23°, Find: 1. Transverse module 2. Transverse pressure angle 3. Axial Pitch 4. Pitch circle diameter of pinion and gear 5. Centre distance 6. Addendum and dedendum circle diameters of the pinion 7. The gear ratio

Atmiya University
Rajkot

Q-14	**A spur pinion having 21 teeth to be made of plain carbon steel 55C8 (S_{ut} = 720 N/mm^2) is to mesh with a gear to be made of plain carbon steel 40C8 (S_{ut} = 580 N/mm^2). The gear pair is required to transmit 22 kW power form IC engine running at 1000 rpm to a machine running at 300 rpm. The starting torque required is 200% of the rated torque, while the load distribution factor is 1.5. The factor of safety required is 1.5. The face width is ten times the module and the tooth system is 20° full depth involute. The gears are to be machined to meet the specifications of grade 6. The gear and pinion are to be case hardened to 400 BHN & 450 BHN respectively. The deformation factor C for gear pair is 11500e. Design the gear pair by using the dynamic factor K_v = 6/6 + V and buckingham's equation for dynamic load.** **Use the following relations:** **Y = 0.484 − (2.87/z) for 20° full depth involute** **K = 0.16 [BHN/100]^2 N/mm^2** For grade 6, e = 8.0 + 0.63 [m + 0.25√d], µm **Take application factor as 2.** **Recommended series of module** Choice-1 Preferred: 1.0, 1.25, 1.5, 2.0, 2.5, 3.0, 4.0; 5.0, 6.0, 8.0, 10, 12, 16, 20 Choice-2: 1.125, 1.375, 1.75, 2.25, 2.75, 3.5, 4.5; 5.5, 7, 9, 11, 14, 18
Q-15	**A pair of parallel helical gears consists of a 20 teeth pinion meshing with a 100 teeth gear. The pinion rotates at 720 rpm. The normal pressure angle is 20°, while the helix angle is 25°. The face width is 40 mm and the normal module is 4 mm. The pinion is made of plain carbon steel 55C8 (S_{ut} =720 N/mm^2) while the gear is made of plain carbon steel 40C8 (S_{ut} = 580 N/mm^2).The pinion and gear are heat treated to a surface hardness of 350 BHN and 300 BHN. The service factor and the factor of safety are 1.5 and 2 respectively. Assume that the velocity factor accounts for the dynamic load and calculate the power transmitting capacity of gears.** **Use the following relations:** $Y' = 0.484 - \frac{2.87}{z'}$ $K_v = \frac{5.6}{5.6 + \sqrt{V}}$ $K = 0.16\left[\frac{BHN}{100}\right]^2, N/mm^2$
Q -16	**Refer spur gear example on slide number 27 of spur gear design theory and examples.**

Atmiya University Rajkot

Q -17	Refer spur gear example on slide number 34 of spur gear design theory and examples.
Q -18	Refer spur gear example on slide number 38 of spur gear design theory and examples.
Q -19	Refer helical gear example on slide number 35 of helical gear design theory and examples.
Q - 20	Refer helical gear example on slide number 40 of helical gear design theory and examples.
Unit IV Design of Gearbox	
Q - 20	What is gear box? Explain the need of using gearbox. Or Explain the purpose of using gear boxes in transmission systems.
Q - 21	List and explain the different types of gearbox used in power transmission systems.
Q - 22	What are the basic considerations in design of multi speed gear box?
Q - 23	Compare between Structural diagram and Speed (Ray) Diagram.
Q - 24	Explain the procedure of designing multi speed gear box for machine tool application.
Q - 25	Why arithmetic & harmonic progressions are not suitable for stepped regulation of speeds in machine tool gear boxes?
Q - 26	Explain the need of using multispeed gear box in machine tools.
Q - 27	Draw the structure and speed diagram for a gear box having operating speed range from 56 rpm to 1000 rpm. Use R4 series, with standard spindle speed. The gear box is connected to a motor driven by a pair of pulleys. Assume the motor speed to be 1440 rpm. Draw the gear box layout diagram.
Unit V Design of IC Engine Components	
Q-28	What is the function of engine cylinder?
Q-29	List the difference between CI & SI Engine.
Q-30	What are the desirable properties of cylinder materials?

Atmiya University Rajkot

Q-31	Explain in brief the bore and length of cylinder for IC engine with suitable equations.
Q-32	Explain in brief thickness of cylindrical wall in engine cylinder with appropriate equations.
Q-33	Explain the stresses generated in cylinder wall for IC engine with proper equation.
Q-34	The cylinder of a four-stroke diesel engine has the following specifi cations: Cylinder bore = 150 mm Maximum gas pressure = 3.5 MPa Cylinder material = Grey cast iron FG 200 (Sut = 200 N/mm2) Factor of safety = 5 Poisson's ratio = 0.25 Find the thickness of the cylinder wall. Also, find the apparent and net circumferential and longitudinal stresses in the cylinder wall.
Q-35	The cylinder of a four-stroke diesel engine has the following specifi cations: Cylinder bore = 130 mm Maximum gas pressure = 3.5 MPa Cylinder material = Grey cast iron FG 200 (S_{ut} = 260 N/mm^2) Factor of safety = 6 Poisson's ratio = 0.25 Find the thickness of the cylinder wall. Also, find the apparent and net circumferential and longitudinal stresses in the cylinder wall.

Atmiya University
Rajkot

Faculty of Engineering and Technology
Department of Computer Engineering

Subject: - Information & Network Security (18BTCECC702)

Question Bank for 1 Mark

Unit:1

1. What is the key feature of symmetric encryption?
2. Name the two main components in the symmetric cipher model.
3. What is the key feature of symmetric encryption?
4. Name the two main components in the symmetric cipher model.
5. What is cryptography?
6. What are the two main types of cryptographic techniques?
7. What is cryptanalysis?
8. Name one type of cryptographic attack.
9. What is a ciphertext-only attack?
10. What is substitution in cryptography?
11. What is transposition in cryptography?
12. Which technique does the Caesar cipher use: substitution or transposition?

Unit:2

1. What is a public key cryptosystem?
2. Name one application of public key cryptosystems.
3. In a public key cryptosystem, what are the two types of keys used?
4. What is one requirement of a secure public key cryptosystem?
5. What does cryptanalysis in the context of public key cryptosystems involve?
6. Which property ensures that it is computationally infeasible to derive the private key from the public key?
7. Who developed the RSA algorithm?
8. What does RSA stand for?
9. What is the mathematical basis of the RSA algorithm?
10. In RSA, what is the product of two large prime numbers called?
11. Which mathematical operation is primarily used in RSA encryption and decryption?
12. What is the public key in RSA composed of?
13. What is the private key in RSA composed of?

Atmiya University

Unit:3

1. What is a cryptographic hash function?
2. What is one key property of a cryptographic hash function?
3. What is the output of a cryptographic hash function called?
4. ame one application of hash functions.
5. How are hash functions used in digital signatures?
6. What role do hash functions play in data integrity?
7. What is the primary requirement of a hash function in cryptography?
8. What is meant by the term "collision resistance" in hash functions?
9. Why must a hash function be computationally efficient?

Unit:4

1. What is a digital signature?
2. Name one property of a digital signature.
3. Why is non-repudiation important in digital signatures?
4. What ensures the integrity of a digital signature?
5. What does PKI stand for?
6. Name one main component of Public Key Infrastructure (PKI).
7. What is the purpose of a Certificate Authority (CA) in PKI?
8. Why is PKI important for secure communication?
9. What is the purpose of key management?
10. Name one method of distributing cryptographic keys.
11. Why is secure key distribution essential in cryptography?

Unit:5

1. What is one common threat to web security?
2. Name one approach to mitigating web security threats.
3. What is the main goal of web security?
4. What does PGP stand for?

5. Who developed PGP?
6. What does S/MIME stand for?
7. What is the primary function of PGP?
8. Which cryptographic techniques does S/MIME use?
9. What is the primary purpose of a firewall?
10. What is peephole optimization in the context of firewalls?
11. How does peephole optimization improve firewall performance?
12. Name one type of firewall.

Atmiya University

Faculty of Engineering and Technology
Department of Computer Engineering

Subject: - Information & Network Security (18BTCECC702)

Question Bank

Unit-1	Marks
Dimensions of cryptography and brute force attack.	4
Types of Cipher (ALL cipher substitution and transposition)	4
Difference between symmetric key and asymmetric key cryptography.	4
Explain steganography.	7
Design principle of block cipher.	7
Explain OSI Security Model.	7
Unit-2	
Explain IDEA algorithm.	4
Explain DES algorithm OR single round in DES algorithm. Also explain avalanche effect.	4
public key and private key model/ structure.	4
Explain RC5 algorithm.	4

Atmiya University

Explain Blow Fish Algorithm.	4
Explain RC4 algorithm	7
Modes of Algorithm	7
ALL Types of cipher, ALL definition (like block cipher, stream cipher, diffusion, confusion) , ALL sum (Encryption and decryption techniques sum).	7
Explain Feistel structure.	7
Explain Diffie Hellman key exchange algorithm with example. Explain man-in-middle attack in key exchange algorithm.	7
Explain RSA algorithm with example	7
Unit-3	
Explain MD5.	4
Explain Hash function and its requirement .	4
Explain basic hash methods.	4
Explain Digital Signature.	4
Explain Digital Envelop.	7
Explain Digital Signature illustration.	7

Atmiya University

Explain SHA-I.	7
Explain SHA-512.	7
Unit-4	
Explain Private key distribution methods.	4
Explain Public Key distribution methods.	4
Explain KDC.	4
Simple Protocol using KDC.	4
Needham-Schroeder Protocol.	4
Otway-Rees Protocol.	4
Explain Controlled Trusted Center.	7
Explain Certification Authority.	7
Explain X.509.	7
Explain Digital Certificate.	7
Explain Public Key Infrastructure.	7
Explain Kerberos.	7

Atmiya University

Explain MAC.	7
Explain HMAC.	7
Unit-5	
RSA Digital signature Scheme.	4
Principles of Digital signature.	4
ElGamal Digital Signature Scheme.	4
Schnorr Digital Signature Scheme.	4
Digital Signature Standard (NIST Digital Signature).	4
Elliptic Curve Digital Signature Scheme.	4
Message Digest Demand or Message Digest Rules.	7
Explain firewall with its all types	7
Explain SSL with all layers	7
Explain SSL Handshake protocol with diagram.	7
Explain SSL Record protocol.	7
Explain ESP Header.	7

Atmiya University

Explain AH with diagram.	7
Explain Dual Signature in detail.	7
Explain TLS.	7
Explain Secure Electronics Transection.	7

Atmiya University

Course Code	Course Name
18BTCEDC802	Internet of Things

Unit 1: Introduction to Internet of Things (IoT)

1. What is the Internet of Things (IoT)?
2. List the key characteristics of IoT.
3. Explain the conceptual framework of IoT.
4. What is the architectural view of IoT?
5. Describe the physical design of an IoT system.
6. How does the logical design of IoT differ from the physical design?
7. What are some real-world applications of IoT?
8. How does IoT contribute to the development of smart cities?
9. What is the role of sensors in IoT applications?
10. How does IoT integrate with other technologies like AI and big data?

Unit 2: IoT and M2M

11. What is the difference between IoT and M2M (Machine to Machine)?
12. Describe the value chains for IoT and M2M.
13. How does the industrial structure of IoT differ from traditional industries?
14. Explain the concept of global value chains in IoT.
15. What is the role of global information monopolies in IoT development?
16. How do you build an IoT architecture?
17. What are the main design principles needed for IoT?
18. Explain the capabilities required to implement IoT solutions.
19. What is an IoT architecture outline?
20. How is data stored and managed in IoT systems?
21. What are the standards considerations for IoT systems?
22. What is SDN (Software Defined Networking), and how is it used in IoT?
23. How does NFV (Network Function Virtualization) contribute to IoT infrastructure?

Unit 3: Design Principles for Web Connectivity

24. What web communication protocols are commonly used for connected devices?
25. Explain the difference between SOAP and REST in web communication.
26. What is HTTP, and how does it work with RESTful APIs in IoT?
27. How do WebSockets facilitate real-time communication in IoT?
28. What are the key principles of internet connectivity in IoT?
29. Explain the concept of IP addressing in IoT.

Atmiya University
Rajkot

30. What role does media access control (MAC) play in IoT connectivity?
31. How does internet-based communication impact IoT device interactions?
32. What are the challenges involved in ensuring reliable web connectivity for IoT devices?

Unit 4: Sensor Technology

33. What is participatory sensing, and how is it used in IoT applications?
34. How does industrial IoT (IIoT) differ from general IoT applications?
35. What are the applications of IoT in the automotive industry?
36. What is the role of actuators in IoT systems?
37. Explain the function of sensors in IoT systems.
38. What are sensor data communication protocols used in IoT?
39. What is Radio Frequency Identification (RFID) technology, and how is it used in IoT?
40. Describe the Wireless Sensor Network (WSN) technology and its importance in IoT.

Unit 5: IoT Design Methodology

41. What is the importance of requirement specification in IoT design?
42. How do you approach the process and model of IoT design?
43. What is the significance of functional and operational views in IoT system design?
44. How do you address privacy concerns in IoT systems?
45. What are some security solutions for IoT?
46. How does IoT security differ from traditional network security?
47. What are Raspberry Pi and Arduino devices, and how are they used in IoT projects?
48. How do Raspberry Pi and Arduino help in prototyping IoT applications?
49. Describe a case study of smart city streetlight control and monitoring.
50. What challenges might arise in implementing smart city IoT systems like streetlight monitoring?

Atmiya University
Rajkot

MCI(18BTCECC604)

Chapter 1: Introduction To 8-bit Microcontroller

Short Questions (1 Mark)

1. How many bytes is 24 kilobytes?
2. What does "RAM" stand for? How is it used in computer systems?
3. What does "ROM" stand for? How is it used in computer systems?
4. Why is RAM called volatile memory?
5. List the three major components of a computer system.
6. What does "CPU" stand for? Explain its function in a computer.
7. List the three types of buses found in computer systems and state briefly the purpose of each type of bus.
8. State which of the following is unidirectional and which is bidirectional: (a) data bus (b) address bus
9. If an address bus for a given computer has 16 lines, what is the maximum amount of memory it can access?
10. What is the purpose of the program counter?
11. What is the advantage of Flash memory over the other kinds of ROM?
12. The ATmega32 has __ pins for I/O.
13. The ATmega32 has __ bytes of on-chip program ROM.
14. The ATmega32 has __ bytes of on-chip data RAM.
15. What are the main differences between the ATmegal6 and the ATmega32?
16. The flag register in the A YR is called the ___
17. What is the size of the flag register in the AVR?
18. AVR is a __ -bit microcontroller.
19. The general purpose registers are __ bits wide.

5 Marks Questions

1. Compare Harvard and Princeton architecture.

Atmiya University

2. What is the difference between microprocessor and microcontrollers explain in detail.
3. Explain the I/O registers associated with the ATmega32 EEPROM.
4. Give the overview of the AVR family.

7 Marks Questions

1. Draw the simplified block diagram of the AVR microcontroller and discuss about the various features of AVR microcontroller.
2. Explain the data RAM of the AVR microcontroller with diagram.
3. Explain the AVR status register in detail.

Chapter 2: AVR Programming in C

Short Questions (1 Mark)

1. There are a total of __ ports in the ATmega32.
2. True or false. All of the ATmega32 ports have 8 pins.
3. To make Port B an output port, we must place in register __ _
4. To make Port B an input port, we must place in register __ _
5. The ATmega32 has a DIP package of __ pins.
6. In ATmega32, how many pins are assigned to Vcc and GND?
7. In the ATmega32, how many pins are designated as I/0 port pins?
8. How many pins are designated as PORTA in the 40-pin DIP package and what are their numbers?
9. How many pins are designated as PORTB in the 40-pin DIP package and what are their numbers?
10. 6. How many pins are designated as PORTC in the 40-pin DIP package and what are their numbers?
11. How many pins are designated as PORTO in the 40-pin DIP package and what are their numbers?
12. Upon reset, all the bits of ports are configured as __ (input, output).
13. Explain the role of DDRx and PORTx in 1/0 operations.

Atmiya University

14. Write a program to get 8-bit data from PORTC and send it to PORTB and PORTD.
15. Which pins are for RxD and TxD?

5 Marks Questions

1. Write a program to toggle all the bits of PORTB and PORTC continuously using 0xAA and 0x55 (b) using the COM instruction.
2. Write a program to toggle PB2 and PBS continuously without disturbing the rest of the bits.
3. Write a program to toggle PD3, PD7, and PCS continuously without disturbing the rest of the bits.
4. Write a program to monitor bit PC3. When it is HIGH, send OxSS to PORTD.
5. Write a program to monitor the PB7 bit. When its LOW, send $SS and $AA to PORTC continuously.
6. Write a program to monitor the PAO bit. When it is HIGH, send $99 to PORTB. If it is LOW, send $66 to PORTB.
7. Write a program to monitor the PBS bit. When it is HIGH, make a LOW-to HIGH-to-LOW pulse on PB3.
8. Write a program to get the status of PC3 and put it on PC4.
9. Create a flowchart and write a program to get the statuses of PD6 and PD7 and put them on PCO and PC7, respectively.
10. Write a program to monitor the PBS and PB6 bits. When both of them are HIGH, send $AA to PORTC; otherwise, send $SS to PORTC.
11. Write a program to monitor the PBS and PB6 bits. When either of them is HIGH, send $AA to PORTC; otherwise, send $SS to PORTC.

7 Marks Questions

1. Explain the I/O port structure in the AVR controller.

Atmiya University

2. Write an AVR C Program to send the ASCII value of word "ATMIYA" on Port C.
3. Write an AVR C Program to take input from PORTB. Perform logical X-OR operation between given input value and 0xAA. Give the answer to PORTA.
4. Write an AVR C Program to continuously give 0xF0 and 0x0F to PORTB. There should be delay of 500ms between each value.
5. Write an AVR C Program to get a value from Port A. If the value is positive send it to Port B otherwise send it to Port D.
6. Write an AVR C Program to continuously monitor PORTA. If the value is Positive Blink the LEDs connected to bit Position D0, D2, D4 and D6 of PORTC. Otherwise blink the LEDs connected to bit position D1, D3, D5 and D7 of PORTC.
7. A door sensor is connected to bit1 of PORT B. When door is open it generates LOW. Write an AVR C program to Turn on the LED connected to bit5 of PORTB when door is closed. Otherwise turn off the LED.
8. Write an AVR C Program to generate the LED pattern as following continuously. Only LED on D0 position is ON and rest of all OFF, D1 is ON and others are OFF and so on. When LED on D7 is ON, it should get turned ON in reverse order.

Chapter 3: Peripheral Interfacing

Short Questions (1 Mark)

1. The RS pin is a ___ (input, output) pin for the LCD.
2. The E pin is an (input, output) pin for the LCD.
3. The E pin requires an (H-to-L, L-to-H) pulse to latch in information at the data pins of the LCD.
4. For the LCD to recognize information at the data pins as data, RS must be set to __ (high, low).
5. The LCD discussed in this section has __ pins.
6. Describe the function of pins E, R/W, and RS in the LCD.
7. What is the difference between the V cc and VEE pins on the LCD?

Atmiya University

8. “Clear LCD" is a _____ (command code, data item) and its value is _hex.
9. What is the hex value of the command code for "display on, cursor on"?
10. Give the state of RS, E, and R/W when sending a command code to the LCD.
11. Give the state of RS, E, and R/W when sending data character 'Z' to the LCD.
12. What is the internal Vref of the ATmega32?
13. The AID of AVR is a(n) -bit converter.
14. True or false. The AID of AVR has pins for DouT·
15. True or false. ND in the AVR is an off-chip module.
16. Find the step size for an AVR ADC, ifYrer=2.56 Y.
17. For problem 5, calculate the DO-D9 output if the analog input is: (a) 0.7 V, and (b) 1 V.
18. How many single-ended inputs are available in the ATmega32 ADC?
19. Calculate the first conversion time for ADPS0-2 = 111 and Fosc = 4 MHz.
20. In AVR, the ADC requires an input clock frequency less than __ _
21. Which bit is used to poll for the end of conversion?

5 Marks Questions

1. Draw interfacing diagram of LEDs (8 LEDs) connected with the port B of ATmega32. Write program to Turn ON LEDs, if input at port A is positive otherwise turn OFF LEDs.
2. Draw and explain interfacing diagram of stepper motor with port B of Atmega32.
3. Explain the working of relay. Draw and explain the interfacing diagram of SPDT relay interfaced with AVR microcontroller.
4. Explain working of optoisolator. Draw and explain interfacing diagram of optoisolator with port B of Atmega32.
5. **E**xplain the features of ATmega32 ADC.
6.
7. Write a program to read ATmega32 ADC Using Polling Method in C.

Atmiya University

7 Marks Questions

1. Draw the diagram of the seven segment interfacing with the ATmega32 and write program to display 9 on the seven segment display.
2. Draw and explain interfacing diagram of LCD with Atmega32.
3. Draw and explain interfacing diagram of DC motor with port C of Atmega32. Write the program to rotate DC motor continuously in clockwise and counter clockwise direction with delay of 500 ms.
4. Explain the ADMUX and ADCSRA registers of ATmega32 ADC.

Chapter 4: Timer and its Programming

Short Questions (1 Mark)

1. How many timers do we have in the ATmega32?
2. True or false. Timer0 is a 16-bit timer.
3. True or false. Timer1 is a 16-bit timer.
4. True or false. The TCCR0 register is a bit-addressable register.
5. In Normal mode, when the counter rolls over it goes from __ to __ .
6. In CTC mode, the counter rolls over when the counter reaches _.
7. Which resource provides the clock pulses to AVR timers if CS02:00 = 6?
8. Timer0 supports the highest prescaler value of __ _
9. Timer1 supports the highest prescaler value of __ _
10. The TCCR0 register is a(n) _-bit register.
11. What is the job of the TCCRO register?
12. True or false. TCCR0 is a bit-addressable register.
13. True or false. TIFR is a bit-addressable register.
14. Find the TCCRO value for Normal mode, no prescaler, with the clock coming from the AVR's crystal.
15. Which register holds the TOVO (timer overflow flag) and TOV1 bits?

5 Marks Questions

Atmiya University

1. Explain TCCR0 register of the Timer0 of ATmega32.
2. Explain TIFR register of ATmega32 microcontroller.

7 Marks Questions

1. Draw the block diagram of the timer0. Explain the role of the various registers and flags associated with timer0 of the ATmega32 microcontroller.
2. Write a C program to send values 0x55 and 0xAA continuously on port c of ATmega32 with delay of 70µs. Use timer0, Normal mode and no prescaler options to generate delay.
3. Draw and explain simplified block diagram of timer1 of Atmega32 microcontroller.

Chapter 5: Wave generation and PWM Programming

Short Questions (1 Mark)

1. True or false. In ATmega32, Timer0 has a wave generator.
2. True or false. CTC mode can be used to generate square waves.
3. True or false. To generate waves the OCO pin must be configured as an input pin.
4. Give the pin number used by the wave generator of Timer0 in ATmega32.
5. True or false. In ATmega32, Timer 1 has three waveform generators.
6. True or false. We can associate each of the pins with each of the waveform generators.
7. True or false. In CTC modes we cannot change the frequency of the generated wave.
8. True or false. The ATmega32 has only one 8-bit timer.
9. True or false. In the ATmega32, Timer0 has a 16-bit register accessible as TCNT0L and TCNT0H.
10. True or false. Each waveform generator has a single pin.
11. Give the pin used for Timer2 waveform generator in the ATmega32.

Atmiya University

12. True or false. In the ATmega32, Timer I has two waveform generator channels.
13. Give the number of waveform generators in the ATmega32.

5 Marks Questions

1. Explain basic registers of timer0.
2. Using Timer0, no prescaler, and CTC mode, write a program that generates a square wave with a frequency of 5 kHz. Assume XTAL = 1MHz.
3. Using Timer1, no prescaler, and CTC mode, write a program that generates a square wave with a frequency of 1 kHz. Assume XTAL = 8 MHz.
4. Using Timer1, no prescaler, and CTC mode, write a program that generates a square wave with a frequency of 5 kHz. Assume XTAL = 8 MHz.
5. Using Timer1 and CTC mode, write a program that generates a square wave with a frequency of 50 Hz. Assume XTAL = 8 MHz.
6. Using Timer1 and CTC mode, write a program that generates a square wave with a frequency of 20 Hz. Assume XTAL = 16 MHz.

7 Marks Questions

1. Draw and explain block diagram of waveform generator in AVR controller.
2. Explain with necessary figures Generating square waves using 8 bit timer in normal mode.
3. Explain with necessary figures Generating square waves using 8 bit timer in CTC mode.
4. Explain with necessary figures the generation of the rectangular waveform in the AVR controller using fast PWM mode.

Atmiya University

5. Write a program to monitor the status of PA7 pin of AVR controller. If PA7 is 1 DC motor controlled through the PB0 bit should move with 25% duty cycle else DC motor should move with 50% duty cycle.

Atmiya University

Course Code	Course Name
1 BTCECC 01	DOT NET Technology

Unit 1: The .NET Framework - Introduction

1. What is the .NET Framework, and what are its key components?
2. Explain the architecture of the .NET Framework.
3. What is the execution model in the .NET Framework, and how does it work?
4. What is the Common Language Runtime (CLR), and what role does it play in .NET?
5. Explain the Common Type System (CTS) and its importance in the .NET Framework.
6. What is the Common Language Specification (CLS), and how does it ensure language interoperability?
7. What is Microsoft Intermediate Language (MSIL), and how is it used in the .NET Framework?
8. How does Just-In-Time (JIT) Compilation work in the .NET Framework?
9. What are Framework Base Classes (FCL), and what are their uses?
10. What is a managed module, and how does it differ from an unmanaged module in the .NET Framework?
11. What is managed code, and how does the CLR enforce its execution?
12. What is an assembly in .NET, and how does it differ from a namespace?

Unit 2: Introduction to C#

13. What is C#, and what are its advantages over other programming languages?
14. List and describe the different data types available in C#.
15. What are operators in C#, and how are they used? Provide examples.
16. Explain the difference between checked and unchecked operators in C#.
17. How do expressions, switch statements, branching, and looping work in C#?
18. Explain how methods are defined and called in C#.
19. What is implicit and explicit casting in C#, and when would you use each?
20. How do constants work in C#? Provide an example of a constant declaration.
21. How are arrays declared and used in C#?
22. What is a structure in C#, and how is it different from a class?
23. What are enumerations in C#, and how are they used?
24. What is boxing and unboxing in C#? Provide examples of both.
25. How can you manipulate strings in C#? Provide an example of common string operations.
26. What is inheritance in C#, and how does it work with base and derived classes?
27. Explain how properties and indexers are used in C#.
28. What is the concept of index overloading in C#? Provide an example.
29. How does polymorphism work in C#? Explain with an example.
30. What is the difference between abstract classes and interfaces in C#?
31. How is operator overloading implemented in C#? Provide an example.
32. What are delegates in C#, and how are they used in event handling?
33. Explain how events work in C#.
34. What are collections in C#? List different types of collections and their use cases.

Atmiya University Rajkot

Unit 3: Windows Form and ADO.NET Applications

35. What is the Windows Forms model in C#, and how does it work?
36. How do you create a Windows Forms application in C#?
37. What are the different types of properties and events associated with Windows Forms?
38. What are the commonly used controls in Windows Forms applications? Provide examples.
39. How do you work with menus and dialogs in Windows Forms applications?
40. What are ToolTips in Windows Forms, and how can they enhance user experience?
41. How does inheritance work in Windows Forms applications?
42. What is the concept of printing in Windows Forms? Provide an example.
43. What is an MDI (Multiple Document Interface) parent form in Windows Forms?
44. How do you create and use custom controls in Windows Forms?

Unit 4: ADO.NET

45. What is the architecture of ADO.NET, and how does it support data access?
46. Explain the different ADO.NET data providers and their functions.
47. What is the connection object in ADO.NET, and how is it used to establish a database connection?
48. How do you execute commands using the command object in ADO.NET?
49. What is the DataReader object in ADO.NET, and how does it work with data?
50. How do DataSets work in ADO.NET? What is the role of the DataAdapter object in populating DataSets?
51. What is the relationship between DataSets and XML data in ADO.NET?
52. How are constraints, relations, and views used within DataSets in ADO.NET?
53. How are stored procedures executed in ADO.NET? Provide an example.
54. What are the advantages of using ADO.NET over older data access technologies?

Unit 5: ASP.NET WebForms

55. What is the architecture of an ASP.NET WebForms application, and how does it differ from traditional web applications?
56. Explain the life cycle of an ASP.NET WebForms page.
57. What are ASP.NET server controls, and how do they differ from HTML controls?
58. What are the different server control events in ASP.NET, and how are they handled?
59. What are validation controls in ASP.NET, and how are they used for input validation?
60. What are user controls in ASP.NET, and how can they be created and used in WebForms applications?
61. Explain the concept of the Master-Detail relationship in ASP.NET WebForms. How do you implement it?
62. How is state management handled in ASP.NET WebForms?
63. What is ViewState, and how does it help maintain page state in ASP.NET?
64. What are hidden fields in ASP.NET, and how do they work for state management?
65. What is ASP.NET Caching, and how can it improve the performance of web applications?
66. How can ASP.NET configurations be managed? Explain the role of the web.config file.

Atmiya University Rajkot

67. What are the different types of security mechanisms available in ASP.NET for web applications?
68. Explain the concepts of reverse and forward engineering in ASP.NET applications.
69. What is the role of session management in ASP.NET, and how is it implemented?
70. How do you handle exceptions in ASP.NET WebForms?

Atmiya University
Rajkot

Course Code	Course Name
1 BTCECC 01	DOT NET Technology

Unit 1: The .NET Framework - Introduction

1. What is the .NET Framework, and what are its key components?
2. Explain the architecture of the .NET Framework.
3. What is the execution model in the .NET Framework, and how does it work?
4. What is the Common Language Runtime (CLR), and what role does it play in .NET?
5. Explain the Common Type System (CTS) and its importance in the .NET Framework.
6. What is the Common Language Specification (CLS), and how does it ensure language interoperability?
7. What is Microsoft Intermediate Language (MSIL), and how is it used in the .NET Framework?
8. How does Just-In-Time (JIT) Compilation work in the .NET Framework?
9. What are Framework Base Classes (FCL), and what are their uses?
10. What is a managed module, and how does it differ from an unmanaged module in the .NET Framework?
11. What is managed code, and how does the CLR enforce its execution?
12. What is an assembly in .NET, and how does it differ from a namespace?

Unit 2: Introduction to C#

13. What is C#, and what are its advantages over other programming languages?
14. List and describe the different data types available in C#.
15. What are operators in C#, and how are they used? Provide examples.
16. Explain the difference between checked and unchecked operators in C#.
17. How do expressions, switch statements, branching, and looping work in C#?
18. Explain how methods are defined and called in C#.
19. What is implicit and explicit casting in C#, and when would you use each?
20. How do constants work in C#? Provide an example of a constant declaration.
21. How are arrays declared and used in C#?
22. What is a structure in C#, and how is it different from a class?
23. What are enumerations in C#, and how are they used?
24. What is boxing and unboxing in C#? Provide examples of both.
25. How can you manipulate strings in C#? Provide an example of common string operations.
26. What is inheritance in C#, and how does it work with base and derived classes?
27. Explain how properties and indexers are used in C#.
28. What is the concept of index overloading in C#? Provide an example.
29. How does polymorphism work in C#? Explain with an example.
30. What is the difference between abstract classes and interfaces in C#?
31. How is operator overloading implemented in C#? Provide an example.
32. What are delegates in C#, and how are they used in event handling?
33. Explain how events work in C#.
34. What are collections in C#? List different types of collections and their use cases.

Atmiya University Rajkot

Unit 3: Windows Form and ADO.NET Applications

35. What is the Windows Forms model in C#, and how does it work?
36. How do you create a Windows Forms application in C#?
37. What are the different types of properties and events associated with Windows Forms?
38. What are the commonly used controls in Windows Forms applications? Provide examples.
39. How do you work with menus and dialogs in Windows Forms applications?
40. What are ToolTips in Windows Forms, and how can they enhance user experience?
41. How does inheritance work in Windows Forms applications?
42. What is the concept of printing in Windows Forms? Provide an example.
43. What is an MDI (Multiple Document Interface) parent form in Windows Forms?
44. How do you create and use custom controls in Windows Forms?

Unit 4: ADO.NET

45. What is the architecture of ADO.NET, and how does it support data access?
46. Explain the different ADO.NET data providers and their functions.
47. What is the connection object in ADO.NET, and how is it used to establish a database connection?
48. How do you execute commands using the command object in ADO.NET?
49. What is the DataReader object in ADO.NET, and how does it work with data?
50. How do DataSets work in ADO.NET? What is the role of the DataAdapter object in populating DataSets?
51. What is the relationship between DataSets and XML data in ADO.NET?
52. How are constraints, relations, and views used within DataSets in ADO.NET?
53. How are stored procedures executed in ADO.NET? Provide an example.
54. What are the advantages of using ADO.NET over older data access technologies?

Unit 5: ASP.NET WebForms

55. What is the architecture of an ASP.NET WebForms application, and how does it differ from traditional web applications?
56. Explain the life cycle of an ASP.NET WebForms page.
57. What are ASP.NET server controls, and how do they differ from HTML controls?
58. What are the different server control events in ASP.NET, and how are they handled?
59. What are validation controls in ASP.NET, and how are they used for input validation?
60. What are user controls in ASP.NET, and how can they be created and used in WebForms applications?
61. Explain the concept of the Master-Detail relationship in ASP.NET WebForms. How do you implement it?
62. How is state management handled in ASP.NET WebForms?
63. What is ViewState, and how does it help maintain page state in ASP.NET?
64. What are hidden fields in ASP.NET, and how do they work for state management?
65. What is ASP.NET Caching, and how can it improve the performance of web applications?
66. How can ASP.NET configurations be managed? Explain the role of the web.config file.

Atmiya University Rajkot

67. What are the different types of security mechanisms available in ASP.NET for web applications?
68. Explain the concepts of reverse and forward engineering in ASP.NET applications.
69. What is the role of session management in ASP.NET, and how is it implemented?
70. How do you handle exceptions in ASP.NET WebForms?

Atmiya University
Rajkot

JAVA (18BTCECC502) Question Bank

1	Why Java is platform independent?
2	What is JRE JDK and JVM
3	Demonstrate Method overloading with Example
4	Write a program that calculates percentage marks of the student if marks of 6 subjects are given.
5	Explain use of Interface with Example
6	Write a program to find length of string and print second half of the string.
7	Explain Different types of access specifier
8	What is requirement of throws keyword ,explain using example.
9	Differentiate Inputstream and outputstream
10	Explain Methodoverriding with example
11	What is Bytecode?
12	Demonstrate Constructor overloading with detail Example
13	Write a Java program to perform Sum and Multiplication of numbers within given Range
14	Explain Types of Inheritance in Java with appropriate Example
15	Demonstrate use of Super keyword
16	Explain Different types of access specifier
17	When finally, block is executed explain using example
18	Explain Different types of streams in Java
19	Describe the following methods related to String() replace()ii) compareTo()
20	What is wrapper class? What is the use of wrapper class in Java?

21	Explain memory management (garbage collection) in java.
22	What is purpose of static and this keyword with example.

23	Explain Thread lifecycle and describe creation of thread with suitable example
24	What is the effect of adding synchronized keyword to a method?
25	Write a program using BufferedInputStream,FileInputStream,BufferedOutputStream,FileOutputStream to copy Content of one file**Test1.txt** into another file**Test2.txt**.
26	Explain use of Linked List collection class with example.
27	Write a program to take three numbers as commandline argument. Display the maximum among them
28	Explain features of JAVA
29	WAP to find prime number from1to100
30	Demonstrate Dynamic Method Dispatch with example
31	Write a program to create two threads, one thread will print odd numbers and second thread will. Print even Numbers between 1 to20 numbers
32	Explain Exception propagation with example.
33	Explain Types of Inheritance in Java.
34	Write a program to differentiate between pass by value and pass by reference.
35	Program a box and also implement methods to print its area, volume and a method to double the size of the box. (pass object as an argument)
36	Write a program that illustrates interface inheritance. Interface P is extended by P1 and P2.Interface P12 inheritsfrom both P1and P2.Each interface declares one constant and one method. class Qimplements P12. Instantiate Q and invoke Each of its methods . Each method displays one of the constants
37	Runtime Polymorphism with example

38	Write an application that creates and starts three threads. Each thread is instantiated from the same class. It executes A loop with10 iterations. Each iteration displays string "HELLO",sleeps for 300 milliseconds.
39	Write a program to count the total no.ofchars, words, lines, alphabets, digits, whitespaces in a given file.
40	WAP to demonstrate Custom Exception in java.

41	ExplainTry,catch,throw,final,finallywithsuitableexample.
42	ExplainSocket&ServerSocketclasswithsuitableexample
43	WriteJavanetworkingProgramming serverclientchatapplicationwithusingTCP
44	WriteJavanetworkingProgrammingserverclientchatapplicationwithusingUDP

Faculty of Engineering and Technology
Department of Computer Engineering

Course Code	Course Name
18BTCECC401	Operating System

Unit 1: Introduction and Process Management

1. What is an operating system (OS), and what are its main functions?
2. What services does an operating system provide to users and applications?
3. Explain the different types of operating systems and give examples.
4. What is a virtual machine, and how does it work within an operating system?
5. What is the purpose of system calls, and how do they interact with the OS? Provide examples such as `write` and `fork`.
6. Define a process in an operating system. What is its significance?
7. What are the different states of a process in an operating system? Describe each state.
8. What is a Process Control Block (PCB), and what information does it contain?
9. Explain the concept of context switching in process management.
10. What are threads, and how do they differ from processes?
11. What are the different types of threads (e.g., user-level, kernel-level)?
12. Explain the different multithreading models used in operating systems.
13. What is process scheduling, and why is it important for CPU utili□ ation?
14. Define the following terms related to process scheduling: Scheduler, CPU utili□ ation, throughput, turnaround time, waiting time, and response time.
15. What is the difference between preemptive and non-preemptive scheduling?
16. Explain the FCFS (First Come First Serve) scheduling algorithm.
17. How does the SJF (Shortest Job First) scheduling algorithm work? What are its advantages and disadvantages?
18. What is the SRTN (Shortest Remaining Time Next) scheduling algorithm, and when is it most useful?
19. How does the Round Robin (RR) scheduling algorithm work, and what is its time quantum?
20. What is priority-based scheduling, and how are processes assigned priorities?

Unit 2: Interprocess Communication

21. What is interprocess communication (IPC), and why is it important in an operating system?
22. Define race conditions in the context of process synchroni□ ation.
23. What is a critical section problem in operating systems, and why is it important to address?
24. What is mutual exclusion, and how is it enforced in operating systems?
25. Describe the hardware solution to the critical section problem.
26. Explain strict alternation as a solution to the critical section problem.
27. How does Peterson□s solution work to solve the mutual exclusion problem?
28. What is the Producer-Consumer problem in IPC, and how is it resolved?
29. What are semaphores, and how are they used for process synchroni□ ation?

Atmiya University Rajkot

30. What are event counters, and how do they help in managing concurrency?
31. Explain the concept of monitors and how they are used for process synchroni□ ation.
32. How does message passing work as an IPC method? Give examples.
33. Describe the Reader□s-Writer problem in IPC and explain how it can be solved.
34. What is the Dining Philosophers problem, and how is it related to process synchroni□ ation?

Unit 3: Memory Management

35. What is basic memory management, and what role does it play in an operating system?
36. Explain the concept of swapping in memory management. Why is it used?
37. Describe contiguous memory management with both fixed and variable partitions.
38. What are the different memory allocation algorithms (First fit, Next fit, Best fit, Worst fit, Quick fit), and how do they work?
39. What is internal fragmentation, and how does it affect memory utili□ ation?
40. What is external fragmentation, and how can it be addressed through compaction?
41. What is paging in memory management, and how is it supported by hardware?
42. Explain the concept of virtual memory and its role in extending the physical memory.
43. What is a page table, and how is it used in virtual memory management?
44. What is a Translation Lookaside Buffer (TLB), and how does it improve memory access speed?
45. What is locality of reference in memory management, and why is it important?
46. What is a page fault, and how does the operating system handle it?
47. Describe the working set model in memory management.
48. What is demand paging, and how does it differ from pre-paging?
49. What is thrashing, and how can it be prevented or mitigated?
50. Explain the different page replacement policies: FIFO, Second Chance, Clock Algorithm, Optimal, NRU, and LRU.

Unit 4: I/O and File Management

51. What are the principles of I/O hardware in an operating system? Describe I/O devices, device controllers, and direct memory access (DMA).
52. How does I/O software function in an operating system? What are the goals of interrupt handlers and device drivers?
53. What is device-independent I/O software, and why is it needed in an OS?
54. Describe the Disk Arm Scheduling algorithm and how it improves disk performance.
55. What are the different file access methods in operating systems? Explain sequential, direct, and indexed access.
56. What are the different types of files used in an operating system?
57. What are file attributes, and what information do they store about files?
58. How does the directory structure work in a file system?
59. What is the file system structure, and how does it organi□ e and manage files?
60. Describe the different file allocation methods: contiguous, linked, and indexed allocation.
61. What is free-space management, and how is it implemented using bit vectors, linked lists, and grouping techniques?

Atmiya University Rajkot

Unit 5: Deadlocks and Linux Operating System

62. What is a deadlock in an operating system, and what conditions are necessary for a deadlock to occur?
63. What are the four characteristics of a deadlock?
64. How can deadlocks be prevented in an operating system? Describe methods for deadlock prevention.
65. Explain deadlock avoidance with the Banker's algorithm.
66. How can deadlocks be detected, and what are the techniques for recovery?
67. What are elementary Linux commands, and how do they help in managing a Linux system?
68. What is shell programming, and how is it used in Linux?
69. What are the key functionalities of the Linux kernel?
70. How does Linux differ from Windows in terms of system architecture and functionality?
71. What are the advantages and disadvantages of using Linux over Windows as an operating system?
72. What are the major differences between Linux and Windows regarding file management and process scheduling?
73. How do Linux and Windows manage memory differently?
74. What is the role of the kernel in Linux, and how does it interact with system processes?

Course Code	Course Name
18BTCECC602	Python Programing

Unit 1: Introduction to Python

1. What is the history of Python? Who is its creator?
2. List some key features of Python that make it unique among other programming languages.
3. Compare Python with C in terms of syntax, ease of use, and execution speed.
4. How does Python compare with Java in terms of syntax and applications?
5. How do you write and execute a simple Python program? Provide an example.
6. What is the role of the `input()` and `output()` functions in Python?
7. What is the purpose of comments and docstrings in Python?
8. How do you determine the datatype of a variable in Python? Provide examples.
9. List and explain the basic operators in Python.
10. How are command-line arguments passed to a Python program? Provide an example.
11. What are control statements in Python? Explain with examples of `if`, `else`, and `elif`.
12. How does a `while` loop and a `for` loop differ in Python?

Unit 2: Structured Types and Functions

13. What are sequences in Python? Explain the different types: range, string, list, tuple, and dictionary.
14. What is a set in Python, and how does it differ from a list?
15. How do you define and call a function in Python? Provide an example.
16. Explain the different types of actual arguments (positional, keyword, and default) in Python functions.
17. What is the difference between local and global variables in Python? Provide examples.
18. What is a recursive function in Python? Write a simple example of recursion.
19. What are anonymous functions in Python? How are they defined using the `lambda` keyword?
20. What is a function decorator in Python? Provide an example of how to use it.
21. Explain what a generator is in Python and provide an example of its use.
22. How do you import and use the `math`, `s` ,sand `nump` modules in Python? Provide examples.

Unit 3: Object-Oriented Programming, Exceptions, and Files

23. What is Object-Oriented Programming (OOP) in Python? Explain the basic concepts.
24. How do you declare a class and its constructor in Python? Provide an example.
25. What is a namespace in Python? Explain how it works in OOP.
26. List and explain the different types of methods in Python classes.
27. What is an inner class in Python? Provide an example.

Atmiya University Rajkot

28. How does inheritance work in Python? Provide an example.
29. What is polymorphism in Python? Explain with an example.
30. How does operator overloading work in Python? Provide an example.
31. What is method overloading and method overriding in Python? How do they differ?
32. What is the purpose of abstract classes and interfaces in Python? Provide an example.
33. What are built-in exceptions in Python? List some common exceptions.
34. How do you define and raise custom exceptions in Python? Provide an example.
35. What is the `assert` statement in Python, and how is it used for debugging?
36. How do you open and close a file in Python? Provide an example.
37. What is the purpose of the `with` statement when working with files in Python?
38. What is the `pickle` module in Python, and how is it used for seriali□ ation and deseriali□ ation?
39. How do you work with directories in Python? Provide an example of creating and deleting directories.

Unit 4: Regular Expressions, Threads, and Networking

40. What is a regular expression in Python, and why is it used?
41. Explain the types of methods available in Python's `re` module for regular expressions.
42. How do you use regular expressions to search for patterns in text in Python? Provide an example.
43. What is a thread in Python, and why is multithreading useful?
44. List and explain the methods used to create a thread in Python.
45. What is thread synchroni□ ation, and how do you prevent race conditions in Python?
46. Explain the concept of deadlock in threading and how to avoid it in Python.
47. What is thread communication in Python, and how is it implemented?
48. What is a daemon thread in Python? How does it differ from a regular thread?
49. What is networking in Python? Explain the difference between TCP/IP and UDP networking in Python.
50. How do you implement a TCP/IP client and server in Python? Provide a simple example.
51. How does a UDP client and server differ from a TCP client and server in Python?

Unit 5: Database Connectivity and GUI

52. How do you connect to a database in Python? What are the libraries commonly used for database connectivity?
53. What is the `sqlite3` module in Python, and how is it used for database operations?
54. How do you perform basic database operations like insert, update, and select in Python?
55. How do you handle database connections, errors, and transactions in Python?
56. What is the purpose of the `turtle` module in Python? How do you draw a simple shape using `turtle`?
57. What is `tkinter` in Python, and how do you create a basic graphical user interface (GUI) using it?
58. What are the different types of widgets available in `tkinter`? Provide examples.
59. How do you handle events and user inputs in `tkinter` GUI applications?
60. What is the `P□ Lab` module, and how do you use it for plotting graphs in Python?

Atmiya University Rajkot

Atmiya University
Rajkot

Faculty of Engineering and Technology
Department of Computer Engineering

B.Tech. SEM.-V
Subject: Software Engineering(18BTCECC503)
Question Bank for 1 Mark

Unit:1

1. Define software.
2. Name any two characteristics of software.
3. What does software quality mean?
4. Give an example of an application software.
5. What is meant by software engineering?
6. Which model uses iterations to refine the system?
7. Name one risk-driven software life cycle model.
8. What is the spiral model used for?
9. Define prototyping in software development.
10. In which life cycle model is customer feedback used most frequently?
11. What is a software life cycle?
12. Name any one software life cycle model.
13. What is the full form of SDLC?
14. Which model is also called the "linear sequential model"?
15. What is the main drawback of the waterfall model?

Unit:2

1. What is software project estimation?
2. Name one estimation technique used in software engineering.
3. What is the purpose of a cost estimation model?
4. Define "effort estimation" in project management.
5. What is the full form of COCOMO?
6. What is the goal of project planning in software engineering?

Atmiya University

7. Name any one element of a software project plan.
8. What is meant by scope in project planning?
9. Why is a Work Breakdown Structure (WBS) used in planning?
10. What is the importance of resource allocation in project planning?
11. What is project scheduling?
12. Name one technique used for project scheduling.
13. What does Gantt chart represent?
14. Define critical path in project scheduling.
15. What is the purpose of tracking a project?

Unit:3

1. What is requirement engineering?
2. Name the phases of requirement engineering.
3. Define requirement validation.
4. What is requirement traceability?
5. Name one challenge in requirement engineering.
6. What is the full form of SRS?
7. What is the main purpose of an SRS document?
8. Name one key characteristic of a good SRS.
9. What is meant by "verifiable" in SRS?
10. Define the term "modifiable" in the context of SRS.
11. What is requirement modeling?
12. Name one technique used in requirement modeling.
13. What does a use case diagram represent?
14. Define data flow diagram (DFD).
15. What is the role of an entity-relationship diagram (ERD) in requirement modeling?

Unit:4

1. What is conceptual design in software development?
2. Define technical design.
3. What is meant by "function access" in programming?
4. Name the two types of design paradigms in software engineering.

Atmiya University

5. What is the difference between a public and private function in object-oriented programming?
6. What is a test case?
7. Name one key component of a test case.
8. What is a positive test case?
9. Define a negative test case.
10. Why is test case documentation important?
11. What is the purpose of user interface (UI) design?
12. Name one principle of effective UI design.
13. What is meant by "responsive web design"?
14. Define a web application.
15. What is the difference between a static and a dynamic web page?

Unit:5

1. What is software quality?
2. Define Software Quality Assurance (SQA).
3. Name one activity performed in SQA.
4. What is the purpose of a quality audit?
5. Name one key characteristic of high-quality software.
6. What is the ISO in ISO 9000?
7. Define ISO 9000 standards.
8. What is the main focus of ISO 9001?
9. Name one benefit of implementing ISO 9000 standards.
10. What is the purpose of quality management systems (QMS)?
11. Define software reliability.
12. What is MTBF in reliability analysis?
13. Name one factor affecting software reliability.
14. What is fault tolerance in software?
15. Why is reliability important for critical systems?

Atmiya University

Faculty of Engineering and Technology
Department of Computer Engineering

B.Tech. SEM.-V
Subject: Software Engineering(18BTCECC503)
Question Bank

Unit:1

Sr. No.	Question	Mark
1	What is software Engineering?	4
2	What are the Software Characteristics?	4
3	What are Myths in Software Engineering?	4
4	Explain Layered Approach in Software Engineering.	4
5	What is Software Process? Justify the purpose of software Engineering.	7
6	Explain Umbrella Activities in detail.	4
7	Explain Software Development Life Cycle in detail.	7
8	Explain Software Process Model (ALL).	7
9	List out the Agile Development Tools.	4

Unit:2

Atmiya University

Sr. No.	Question	Mark
1	Explain Risk Analysis & Management in detail.	4
2	Explain Types of Software Maintenance.	4
3	What is Software Metrics? Explain in detail.	4
4	Explain Software Project Estimation Technique in detail.	7
5	Explain Function Point Analysis in detail.	7
6	Explain COCOMO Model.	4
7	Explain Scheduling Principles in detail.	4
8	Explain Project Tracking with example.	4
9	What risk identification.	4
10	What is RMMM.	4
11	Study of requirement specification for a project has produced following results: Need for 7 inputs, 10 outputs, 6 inquiries, 17 files and 4 external interfaces Input and external interface function point attributes are of average complexity and all other function points attributes are of low complexity Determine adjusted function points assuming complexity adjustment value is 32.	7
12	Assume that the size of an organic type software product has been estimated to be 32,000 lines of source code. Assume that the average salary of software engineers is Rs. 15,000/- per month. Determine the effort, nominal development time and cost required to develop the software product.	7
13	Explain W5HH Principle in detail.	7

Unit:3

Atmiya University

Sr. No.	Question	Mark
1	What is SRS? Discuss Functional Requirements and Non-functional Requirements with example.	7
2	What is Requirement Engineering? Explain different tasks of Requirement Engineering.	4
3	Explain Requirement Elicitation Process.	4
4	What is DFD? Explain level in DFD.	4
5	What is Structure Design? Explain Structure Chart in detail.	7
6	UML Diagrams (ALL).	7

Unit:4

Atmiya University

Sr. No.	Question	Mark
1	Explain the difference between Cohesion and Coupling.	4
2	Explain Function Oriented Design and Object Oriented Design	4
3	Explain Conceptual and technical design.	4
4	What is User interface design	4
5	Discuss Code Review Techniques.	7
6	What is Testing? Discuss Types of Testing.	7
7	Discuss Black-Box testing technique with its method.	7
8	Discuss White-Box testing technique with its method.	7
9	Explain the pyramid of web application design in detail.	4
10	Explain Coding Standard.	4

Unit:5

Faculty of Engineering and Technology
Department of Computer Engineering

Sr. No.	Question	Mark
1	What is Software Maintenance? Explain types of Software Maintenance.	4
2	What is Quality? Explain ISO 9000.	4
3	Explain SCM Process in detail.	7
4	What is Re-Engineering? Explain Reverse Engineering and Forward Engineering.	7
5	What is Measurement of Software Reliability?	4
6	Give methodology of Six Sigma.	7
7	Explain CMM.	7

ATMIYA UNIVERSITY, RAJKOT
Computer Engineering Department

B.Tech. SEM.-VI
Subject: DSE-Core 2: Advanced JAVA
(18BTITDC603)
Question Bank

+91 281 2563445 +91 281 2563952 admin@atmiyauni.ac.in www.atmiyauni.ac.in

Atmiya University

ATMIYA UNIVERSITY
सुहृदं सर्वभूतानाम्

Sr#	Question	Unit #	Marks
1	What are IP Addresses?	1	1
2	What are Protocols?	1	1
3	What is a MAC Address?	1	1
4	What is Port Number?	1	1
5	Explain Enumeration in Java with examples.	1	5
6	Explain Java Network Terminology.	1	5
7	Explain methods of InetAddress class in detail.	1	5
8	Explain methods getProtocol(), getHost(), getPort(), getFile().	1	7
9	Explain File Descriptor with example.	1	7
10	Explain benefits of Servlet.	2	1
11	What is Servlet?	2	1
12	Explain Cookies in Servlet.	2	1
13	Explain URL Rewriting.	2	5
14	Write a static code for Login Form using HttpServlet.	2	5
15	Explain Servlet Life Cycle.	2	5
16	Write a program to print Hello World by inheriting HTTPServlet in Java.	2	7

Atmiya University

17	Create Login and Logout using HTTP Session in Servlet (Practical).	2	7
18	Write a program of Servlet Login and Logout program using Cookies.	2	7
19	Write a program to demonstrate Servlet Interface for accessing initialized parameters from web.xml and accessing it in a Java class file.	2	7
20	Explain Life Cycle of JSP Page.	3	1
21	Explain JSP Scriptlet Tag.	3	1
22	Explain JSP Expression, Declaration, Tag.	3	5
23	Explain Scripting Elements in JSP.	3	5
24	What is the Architecture of JSP?	3	7
25	Explain Advantages of JSP over Servlet.	3	7
26	Explain Hibernate Architecture.	4	1
27	Explain Hibernate Query Language (HQL) with example.	4	5
28	Explain Entity Relationships (1-N, N-1, N-N) in Hibernate.	4	7
29	Explain Spring JDBC with an example application.	5	5
30	Explain Dependency Injection in Spring MVC with an example.	5	7

Information Technology Department
B.Tech. SEM.-VII

Subject: Search Engine Optimi□ation
(18BTITCC704)
Question Bank

Unit 1: Introduction

1. What is SEO, and why is it important for websites?
2. Explain the difference between organic search results and paid search results.
3. What are search engines, and how do they work?
4. Define and explain the components of a search engine (crawler, indexer, and ranking algorithms).
5. What is the importance of keywords in SEO?
6. What is the difference between on-page and off-page SEO?
7. Explain the concept of search intent and its types (navigational, informational, transactional).
8. What is SERP, and what are its key elements?
9. What are meta tags, and how do they impact SEO?
10. What is the difference between black hat SEO and white hat SEO?
11. Explain the role of search engine algorithms in determining rankings.
12. What are the benefits and limitations of SEO compared to other digital marketing methods?

Unit 2:

1. What is on-page SEO, and why is it critical for website ranking?
2. How do you optimize title tags and meta descriptions for SEO?
3. What is the importance of header tags (H1, H2, H3, etc.) in on-page SEO?
4. Explain the concept of keyword density and its ideal percentage.

5. How do you optimize content for SEO? What is the importance of unique and quality content?
6. What are internal links, and how do they contribute to SEO?
7. Explain the role of URL structure in on-page SEO.
8. What is image optimization, and how does it affect SEO performance?
9. How does website loading speed impact SEO?
10. What is the importance of mobile responsiveness in on-page SEO?
11. What is schema markup, and how does it improve SEO?
12. How do duplicate content issues affect SEO, and how can they be avoided?

Unit 3:

1. What is off-page SEO, and how does it differ from on-page SEO?
2. What is link building, and why is it important for SEO?
3. Explain the difference between dofollow and nofollow backlinks.
4. What is domain authority, and how is it measured?
5. How do guest blogging and content marketing help in off-page SEO?
6. What is the role of social media in off-page SEO?
7. How do forums, Q&A websites, and online communities contribute to off-page SEO?
8. What are broken backlinks, and how can they be fixed for SEO purposes?
9. Explain the significance of local citations in local SEO.
10. What is the role of influencer outreach in off-page SEO strategies?
11. What are directory submissions, and how do they impact SEO?
12. How do search engines evaluate the quality of backlinks?

Unit 4:

1. What is technical SEO, and how does it enhance website performance?
2. Explain the importance of XML sitemaps in SEO.
3. What is robots.txt, and how does it help in controlling crawler behavior?
4. How do search engines handle HTTP and HTTPS in terms of SEO?
5. What is canonicalization, and how does it prevent duplicate content issues?
6. Explain the significance of structured data and rich snippets in SEO.
7. What is website crawlability, and how can it be improved?
8. How does a secure website (HTTPS) impact SEO rankings?
9. What is page speed, and what tools can be used to analyze it?
10. Explain how to fix 404 errors and their impact on SEO.
11. What is a site audit, and why is it important for technical SEO?
12. How do mobile-first indexing and Core Web Vitals impact SEO?

Unit 5:

1. What is the role of Google Analytics in SEO?
2. Explain the importance of Google Search Console for SEO monitoring.
3. How can you track keyword rankings over time?
4. What is bounce rate, and how does it affect SEO?
5. What is CTR (Click-Through Rate), and how can it be improved?
6. How do you measure the ROI of an SEO campaign?
7. What is A/B testing in SEO, and how is it implemented?
8. How do algorithm updates like Google Panda, Penguin, and Hummingbird affect SEO strategies?
9. What is voice search optimization, and why is it important for modern SEO?
10. What is local SEO, and how is it implemented for businesses?
11. Explain the concept of international SEO and the importance of hreflang tags.
12. What are some future trends in SEO, such as AI-driven optimization and semantic search?

ATMIYA UNIVERSITY, RAJKOT

Information Technology

B.Tech. SEM.-II

Subject: Fundamental of Computer Programming 18BTITCC201

Questions Bank

	UNIT-1	Marks
1	Explain Number System With example.	4
2	What is Algorithm? Write with Example.	4
3	Explain Top down Approach with Example.	4
4	Explain Bottom Up Approach with Example.	4
5	Explain Block Diagram of Computer.	7
6	Explain Type of Programming Language.	7
7	What is Flowchart? Explain It's Shape and Example.	7
8	Explain Binary to Octal and Octal to Binary System With Example.	7
9	Explain Binary to Hexadecimal and Hexadecimal to Binary with example.	7
10	Explain Binary to Decimal and Decimal to Binary with example.	7
	UNIT-2	
1	Explain Keyword.	4
2	What is Variable? Explain it's Declaration with Example	4
3	What is Identifiers? Write it's Example.	4
4	Write Data Input Out Function.	4
5	What is Type Conversion ? Write with Example.	4
6	Explain Data Types.	7
7	What is Operator ? Explain It's type with Example.	7
8	Explain C Character Set.	7
9	Explain Looping: while, do-while, for loop, Nested with Example.	7
10	Explain Branching:if,if-else,ladder if-else, Nested if-else with Example.	7

Atmiya University

11	Explain Switch and goto Statement with Example.	7
		7
UNIT-3		
1	What is Array ? Explain Processing an array with example.	4
2	Explain Strings: Declaration and Initialization With example.	4
3	Explain String Function With its Type.	7
4	What is Array ? Explain It's Type with example	7
UNIT-4		
1	Defining a Function and Accessing a Function.	4
2	What is Function? How to Initialization function?	4
3	What is pointer? Explain With Example.	4
4	What is Function? Explain it's type with Example.	7
5	What is Recursion? explain with Example.	7
UNIT-5		
1	What is Structure? How to define Structure ?	4
2	Declaration of Structure with Example.	4
3	What is Union Write with Example.	4

Atmiya University

ATMIYA UNIVERSITY, RAJKOT
Information Technology Department

B.Tech. SEM.-III
Subject: Data Structures and Algorithms (18BTITCC301)
Question Bank

Unit:1

Introduction to Basic data structure and Algorithm:

1. Define primitive and non-primitive data structure with examples
2. Explain different types of Data Structure
3. Give difference between simple queue and Circular queue with examples
4. Write algorithm for all operations in stack
5. Write algorithm for all operations in queue
6. Applications of stack
7. Applications of queue
8. Insert-Begin and Insert-End Algorithm of Linked List (all 4 types)
9. Delete-Begin and Delete-End Algorithm of Linked List (all 4 types)
10. Applications of Linked List

Unit:2

Trees and Graph:

1. Basic tree terminologies like what is tree, what is node, what is edge etc.
2. Binary tree concepts
3. What is binary search tree? What are its features?
4. In-order, pre-order and post-order traversal in binary tree
5. Binary search tree with examples1.
6. Basic graph terminologies like what is graph, un-directed graph, and weighted graph
7. Spanning tree using prim's and kruskal's algorithm
8. Graph traversal using depth first search and breadth first search
9. Finding shortest path using dijaktra' algorithm
10. Applications of tree and graph

Unit:3

Searching and Hashing:

1. Difference between Binary search and sequential search
2. Example of binary search.
3. What is hash table and hash function
4. Explain Different types of hashing techniques with theory and examples
5. Example of finding hash value
6. Hash collision-resolution techniques

Unit:4

Sorting and its Analysis:

1. Sorting examples bubble sort, selection sort, merge sort and quick sort

Unit:5

Algorithm Design Techniques:

1. What is an algorithm?
2. What is space and time complexity?
3. Explain different types of algorithm design techniques

ATMIYA UNIVERSITY
(Established under the Gujarat Private University Act 11, 2018)
Yogidham Gurukul, Kalawad Road, Rajkot - 360005, Gujarat (INDIA)

ATMIYA UNIVERSITY, RAJKOT
Information Technology Engineering Department

B.Tech. SEM.-VII
Subject: Data Mining & Business Intelligence (18BTITCC703)
Question Bank
Unit: 1

Sr. No.	Question	Mark
1	What is a Data Warehouse? Explain it with Key Features.	5
2	Explain Data Warehouse Design Process in Detail.	7
3	What is Business Intelligence? Explain Business Intelligence in today's perspective.	5
4	Explain metadata repository.	1
5	What do you mean by data mart? What are the different types of data mart?	7
6	Explain usage of Data warehousing for information processing, analytical processing, and data Mining.	5
7	Explain three tier data warehouse architecture in brief.	7
8	Differentiate between OLTP and OLAP systems.	7
9	List out the different schema of data warehouse and explain each in detail. or Explain following design methods for multidimensional database: Star schema, Snowflake schema, Fact constellation schema. Also compare them with illustration.	7
10	List and describe major issues in data mining. OR List Challenges to data mining regarding data mining methodology and user-interactions issues.	5

Atmiya University

11	Explain OLAP Operations in the Multidimensional Data Model?	7
12	Explain Types of OLAP Servers.	5
13	Draw and explain OLAP Operations based on Cricket team	5
14	Draw and explain OLAP Operations based on given data: Consider the example of sales of four companies C1, C2, C3 &C4 per quarter on the basis of product category(Men's, Women's, Electronics &Home).	5
15	Draw and explain OLAP Operations based on given data: 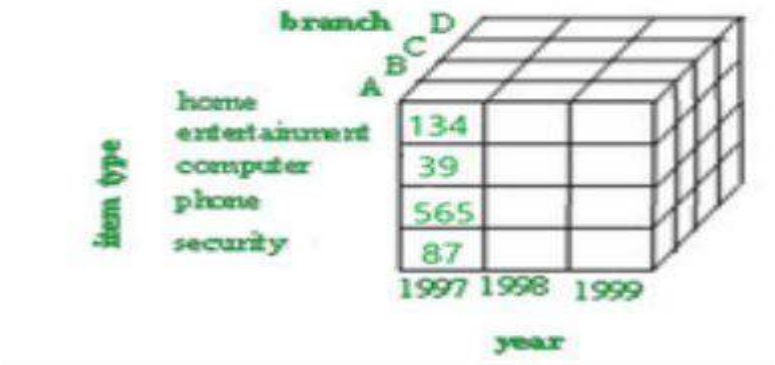	5
16	Consider a cube that represents the annual sales (4 Quarters: Q1, Q2, Q3, Q4) of various kinds of clothes (Shirt, Pant, Shorts, Tees) of a company in 4 cities (Delhi, Mumbai, Las Vegas, New York)	5

Atmiya University

Unit: 2

Sr. No.	Question	Mark
1	Define the term "Data Mining". With the help of a suitable diagram explain the process of knowledge discovery from databases.(KDD process) Or What is Data mining? Explain Data mining as one step of Knowledge Discovery Process.	5
2	List and describe major issues/challenges in data mining. OR List Challenges to data mining regarding data mining methodology and user-interactions issues.	7
3	Explain different types of data on which mining can be performed.	7
4	Explain all the applications of data mining in brief.	7
5	Give any 7 differences between data mining and KDD.	5
6	Explain in brief the process of "Integration Of A Data Mining System With A Database Or Data Warehouse System"	5

Unit: 3

Atmiya University

Sr. No.	Question	Mark
1	Calculate Mean, Median, Mode, Range, Variance & Standard deviation . 13, 18, 13, 14, 13, 16, 14, 21, 13	7
2	Calculate Mean, Median, Mode, Range, Variance & Standard deviation . 7,11,11,15,20,28	7
3	Calculate Mean, Median, Mode, Range, Variance & Standard deviation . 2,4,1,6,3,4,8,5,5	7
4	Explain all types of attributes in brief.	7
5	Explain Data preprocessing task in brief	7
6	Explain Data Integration task in brief	5
7	Explain Data transformation in brief	5
8	Explain Binning methods in brief	5

Unit: 4

Atmiya University

Sr. No.	Question	Mark
1	Explain Association rule with support count and support and confident and other terms in brief	5
2	Explain apriori algorithm in brief.	7
3	Explain Decision tree classification in detail.	5
4	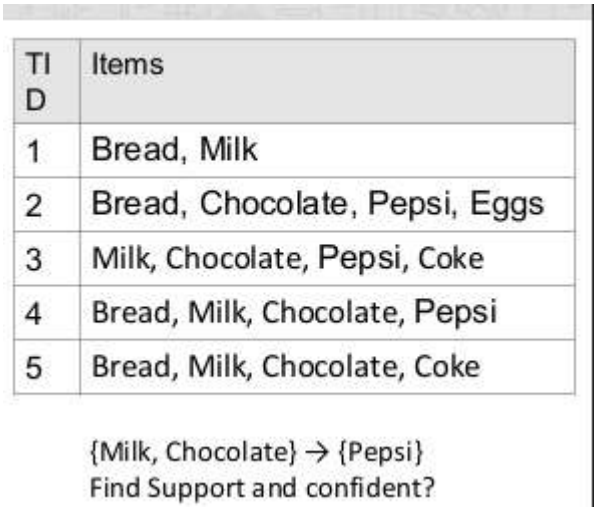	5
4	Explain Naive Byes Classification / Bayesian Classification in detail	7

Unit: 5

Atmiya University

Sr. No.	Question	Mark
1	Explain steps to build classification models.	7
2	What is Classification and types of classification in brief.	5
3	Explain Issue in classification and also real time application of classification in detail.	7
3	Explain Decision tree classification and rule based classification in detail	7
4	What is Clustering? Explain K-means Clustering in brief.	7
5	What is Clustering? Explain K-medoids Clustering in brief.	7
6	Give any 5 difference between Cluster and Classification	5
7	Explain Regression and its type in detail.	5
8	Explain neural network with diagram in detail.	5

Atmiya University

Information Technology Department
B.Tech. SEM.-VII

Subject: Compiler Design (18BTITCC702)
Question Bank

Unit 1: Introduction to Compilers

1. What is a compiler, and how does it differ from an interpreter?
2. Explain the different phases of a compiler.
3. What is the role of the lexical analysis phase in a compiler?
4. How does the syntax analysis phase work? What is its significance?
5. What are tokens, lexemes, and patterns in lexical analysis?
6. Explain the concept of regular expressions and their use in lexical analysis.
7. What is a symbol table? How is it managed in a compiler?
8. What is a cross-compiler, and how is it different from a native compiler?
9. Explain the difference between a one-pass compiler and a multi-pass compiler.
10. What is the purpose of intermediate code generation in a compiler?
11. Define and explain the concept of bootstrapping in compiler design.
12. Compare a compiler and an assembler.

Unit 2: Lexical Analysis

1. What is the main purpose of the lexical analysis phase in a compiler?
2. What is a finite automaton, and how is it used in lexical analysis?
3. Explain the differences between deterministic finite automata (DFA) and nondeterministic finite automata (NFA).
4. What is the process of converting a regular expression into a DFA?
5. How does the lexical analyzer handle errors?
6. Explain the concept of input buffering in lexical analysis.
7. What is the difference between keywords and identifiers in lexical analysis?
8. Describe the role of a lexical analyzer generator like Lex.

Atmiya University

9. What is the importance of lookahead in lexical analysis?
10. How are tokens represented in a symbol table during lexical analysis?

Unit 3: Syntax Analysis

1. What is the main purpose of syntax analysis in a compiler?
2. What are context-free grammars (CFG)? Provide examples.
3. Explain the difference between top-down and bottom-up parsing.
4. What is a parse tree, and how is it generated during syntax analysis?
5. What is a left-recursive grammar? How is it eliminated?
6. Explain the concept of FIRST and FOLLOW sets in parsing.
7. What is the LL(1) parsing technique, and how does it work?
8. Compare and contrast LL(1) and LR(1) parsers.
9. How does a shift-reduce parser work? Provide an example.
10. What is the difference between SLR, CLR, and LALR parsers?
11. What is a syntax error, and how is it detected and recovered in parsing?
12. Describe the role of Yacc in parser generation.

Unit 4: Semantic Analysis and Intermediate Code Generation

1. What is semantic analysis, and how does it differ from syntax analysis?
2. Explain the concept of type checking and type inference in semantic analysis.
3. What are attribute grammars, and how are they used in semantic analysis?
4. What is the purpose of a syntax-directed translation scheme?
5. Explain the difference between synthesized and inherited attributes.
6. What is intermediate code in a compiler? Why is it needed?
7. Describe three-address code and its components.
8. What is a syntax tree, and how is it different from a parse tree?
9. Explain the role of postfix notation in intermediate code generation.
10. What is the difference between a basic block and a flow graph?
11. Explain the concept of static and dynamic scoping in programming languages.
12. What are activation records, and how are they managed?

Unit 5: Code Optimi□ ation and Code Generation

1. What is code optimization, and why is it necessary?

2. Explain the difference between machine-independent and machine-dependent optimizations.
3. What are the common techniques used for machine-independent optimization (e.g., dead code elimination, constant folding)?
4. Explain loop optimization techniques such as loop unrolling and loop fusion.
5. What is peephole optimization? Provide examples.
6. How does the compiler detect and eliminate common sub-expressions?
7. What is the role of a code generator in the compiler design process?
8. Explain the concept of target code generation and its challenges.
9. What are the differences between static and dynamic memory allocation?
10. Describe register allocation and its importance in code generation.
11. What is the role of a machine code instruction set in the code generation phase?
12. How are runtime errors handled by the compiler?

ATMIYA UNIVERSITY, RAJKOT
Information Technology

B.Tech. SEM.-VIII
Subject: Artificial Intelligence
(18BTITCC801)
Question Bank

Unit:1

1. What is AI? Discuss types of problems requiring Intelligence to solve it.
2. Define the different task domains of AI. Describe the classification of AI.
3. Short Note: TIC TAC TOE
4. What are the problem characteristics of Artificial Intelligence?
5. Discuss the AI problem characteristics in details.
6. What do you mean by state space representation of a problem?
7. What is production system? Explain it with an example. Discuss the characteristics of a production system.
8. What are the benefits of a production system?
9. Explain state space with the use of Water Jug Problem.
10. Solve Water Jug Problem using Production Rule system.

Unit:2

1. What is a state space in AI?
2. Explain the difference between uninformed and informed search.
3. Define heuristic function with an example.
4. What is the significance of the A* search algorithm?
5. Explain the concept of a constraint satisfaction problem (CSP).

6. Describe the working of Breadth-First Search (BFS) and Depth-First Search (DFS).
7. Compare Greedy Best-First Search and A* Search.
8. Explain Minimax Algorithm in game playing with an example.
9. Discuss the limitations of search-based problem-solving techniques.

Unit:3

1. What is knowledge representation in AI?
2. List the different techniques for knowledge representation.
3. What are semantic networks? Explain with an example.
4. Define the term "ontology" in the context of AI.
5. Differentiate between procedural knowledge and declarative knowledge.
6. Discuss the importance of knowledge representation in AI systems.
7. Explain the concept of frames and scripts with examples.
8. What are propositional and predicate logic? Explain with examples.
9. Compare rule-based systems and case-based reasoning.

Unit:4

1. Define Natural Language Processing.
2. What are the main challenges of NLP?
3. Explain tokenization and stemming in NLP.
4. What is a chatbot? Give an example of its application.
5. Differentiate between syntactic analysis and semantic analysis.
6. Discuss the working of sentiment analysis in NLP.
7. Explain the role of vectorization techniques like TF-IDF in text processing.
8. How does machine translation work? Provide examples of tools used.
9. What is the role of deep learning in NLP tasks like speech recognition?

Unit:5

1. Explain different approaches to knowledge representation.
2. Explain the different issues in knowledge representation.
3. Differentiate between Declarative and Procedural representation of knowledge.
4. Explain forward and Backward Reasoning with suitable example for each.
5. Justify using an example that prolog uses Backward chaining to prove or answer any given goal.
6. Discuss following: a. Bayesian Network b. Fuzzy Logic
7. Explain alpha beta cutoffs procedure in Game Playing.
8. Explain minimax procedure for game playing with an example.
9. Explain artificial neural network in brief.

Atmiya University

ATMIYA UNIVERSITY
सुहृदं सर्वभूतानाम्

ATMIYA UNIVERSITY, RAJKOT

Information Technology

B.Tech. SEM.-VIII

Subject: Angular JS(18BTITDC704)

Question Bank

Unit:1

1. What is AngularJS, and how does it differ from Angular?
2. Explain the concept of two-way data binding in AngularJS.
3. What is a module in AngularJS, and why is it used?
4. How is dependency injection implemented in AngularJS?
5. Explain the role of directives in AngularJS.
6. What are the different types of directives in AngularJS? Provide examples.
7. What is the `$scope` object, and how does it work?
8. How does AngularJS handle expressions?
9. Explain the difference between `$scope` and `controller`.
10. What are filters in AngularJS? Provide examples of commonly used filters.
11. How do you create a custom filter in AngularJS?
12. What is the role of the `ng-app` directive?
13. What does the `ng-model` directive do?
14. How does AngularJS manage the lifecycle of a scope?
15. What are AngularJS expressions, and how are they different from JavaScript expressions?

Unit:2

Atmiya University

16. What is AngularJS routing, and why is it important?
17. Explain the role of `$routeProvider` in AngularJS.
18. How do you configure routes in AngularJS?
19. What is the purpose of `ng-view`?
20. How can you handle route parameters in AngularJS?
21. What is `$routeParams`, and how is it used?
22. What are resolve properties in AngularJS routes?
23. How can you implement nested views in AngularJS?
24. How does AngularJS handle redirections during routing?
25. Explain the difference between `$location` and `$route`
26. What are services in AngularJS?
27. How does a factory differ from a service in AngularJS?
28. How can you create and use a custom service in AngularJS?
29. What are some built-in services provided by AngularJS?
30. Explain the role of `$http` in AngularJS.

Unit:3

31. How does AngularJS support form validation?
32. What is the `ng-submit` directive?
33. Explain the `$valid`, `$invalid`, `$pristine`, and `$dirty` states in AngularJS forms.
34. How can you create custom form validations in AngularJS?
35. What is the `ng-required` directive, and how is it used?
36. What are some common strategies to improve the performance of AngularJS applications?
37. How does `$digest` differ from `$apply`?
38. Explain one-time binding in AngularJS and its advantages.
39. How can you debounce or throttle `$watch` in AngularJS?
40. What is la□ y loading, and how can it be implemented in AngularJS?

Unit:4

Atmiya University

41. What is Karma, and how is it used in testing AngularJS applications?
42. What is the role of Protractor in AngularJS testing?
43. How can you unit test a controller in AngularJS?
44. What is `$httpBackend`, and how is it used for mocking HTTP requests in tests?
45. Explain end-to-end (e2e) testing in the context of AngularJS.

Unit:5

46. How does `$rootScope` differ from `$scope`, and when should it be used?
47. What is `$q`, and how is it used for managing promises in AngularJS?
48. Explain the concept of custom directives and how to create one.
49. What is the `$watch` function, and how does it work?
50. How does AngularJS integrate with RESTful APIs?

Atmiya University

ATMIYA UNIVERSITY
(Established under the Gujarat Private University Act 11, 2018)
Yogidham Gurukul, Kalawad Road, Rajkot - 360005, Gujarat (INDIA)

Department Of Information Technology

Sem-V-Software Engineering 1 BTITCC 01

Question Bank

Unit-

1. What is software?
2. What is software engineering?
3. Explain Software Engineering As A Layered Technology.
4. Explain Software Engineering As A Layered Architecture.
5. Explain The Characteristics Of Good Software.
6. Explain Software Development Life Cycle.
7. Explain Software Development Process.
8. Explain stages of SDLC.
9. List out the various models of software development.
10. Explain Waterfall Model.
11. Advantages of waterfall model.
12. Disadvantages if waterfall model.
13. Explain Iterative Waterfall Model.
14. Advantages of Iterative Waterfall Model.
15. Disadvantages of Iterative Waterfall Model.

Unit-

16. Explain Incremental model.
17. Advantages of Incremental model.
18. Disadvantages of Incremental model.
19. When we use the Incremental Model?
20. Explain RAD Model.
21. Advantages of RAD Model.
22. Disadvantages of RAD Model.
23. Explain Spiral Model.

Atmiya University

24. Advantages of Spiral Model.
25. Disadvantages of Spiral Model.
26. When to use Spiral Model?
27. Explain Prototype Model.
28. Advantages of Prototype Model.
29. Disadvantages of Prototype Model.
30. Difference between Hardware & Software.

Unit-

31. What is hardware?
32. Explain What Is Risk?
33. Explain types of Risk.
34. Explain Risk Management.
35. Explain Project Planning.
36. Explain Project Size Estimation.
37. Explain LOC.
38. Explain FP.
39. Explain Project Scheduling.
40. Advantages of Project Scheduling.
41. Explain Work Breakdown Structure (WBS).
42. Advantages of WBS.
43. List out the Symbols of Usecase Diagram.
44. List out the Symbols of Data Flow (DFD) Diagram.
45. List out the symbols of activity diagram.

Unit-

46. List out the symbols of Er diagram.
47. What is validation?
48. What is verification?
49. What is software testing?
50. Explain types of testing?
51. Give the difference between white box testing vs black box testing.
52. What is cohesion?

Atmiya University

53. What is coupling?
54. Write a short note on code review process.
55. Explain the term, software maintenance.
56. Roles and responsibility of software project manager.
57. Explain skills of software project manager.
58. Explain code review techniques.
59. Explain component based development.
60. Explain types of requirement.

Unit-

61. What is feasibility?
62. Explain types of feasibility.
63. Explain design concept.
64. Explain taxonomy of architectural design or style.
65. Explain types of designing in software engineering.
66. Explain characteristics of good srs.
67. Explain client server architecture.
68. Draw use case diagram for school management system.
69. Draw use case diagram for hospital management system.
70. Draw DFD diagram for school management system.
71. Draw DFD diagram for hospital management system.
72. Draw Activity diagram for school management system.
73. Draw Activity diagram for hospital management system.
74. Draw ER diagram for school management system.
75. Draw ER diagram for hospital management system

Atmiya University

Course Code	Course Name
18BTCECC603	Theory Of Computation

Unit 1: Review of Automata and Language

1. Define a set and provide two examples.
2. Explain the concept of a function and give an example.
3. What is the Chomsky hierarchy? List its four levels.
4. Prove using mathematical induction that the sum of the first nnn natural numbers is n(n+1)/2n(n+1)/2n(n+1)/2.
5. Define a language in the context of automata theory.
6. What are relations? How do they differ from functions?
7. Write a recursive definition for the factorial function.
8. How is logic used in defining languages?
9. What is a finite language? Give an example.
10. Provide an example of a recursively defined set.

Unit 2: Regular Expressions and Finite Automata

11. Write a regular expression to represent the language containing all strings over □ a,b□ \□ a, b\□ □ a,b□ that end with "ab".
12. Differentiate between deterministic and non-deterministic finite automata.
13. Prove the equivalence of NFA and DFA using the subset construction method.
14. What is the complement of a regular language? Explain with an example.
15. Explain Kleene□s theorem with an example.
16. Construct an NFA for the regular expression a∗ba^*ba∗b.
17. Convert the NFA from the previous question into a DFA.
18. What are null (□) transitions in finite automata? Give an example.
19. Explain the pumping lemma for regular languages with an example.
20. Minimi□ e the given DFA and explain each step.

Unit 3: Context-Free Grammar (CFG)

21. Define context-free grammar (CFG) and provide an example.
22. What is a derivation tree (parse tree)? Construct one for the CFG S□ aSb□ S \rightarrow aSb □ \epsilonS□ a$b .
23. Explain ambiguity in CFG with an example.
24. How can ambiguity in CFGs be resolved?
25. Describe the normal form of CFG. Convert S□ aS|bSa|□ S \rightarrow aSb □ bSa □ \epsilonS□ aS|bSa|□ into Chomsky Normal Form (CNF).
26. What is the union of two context-free languages? Provide an example.
27. Define concatenation of context-free languages with an example.

Atmiya University Rajkot

28. How are algebraic expressions represented using CFG?
29. Explain how CFGs can be simplified.
30. Write a CFG for the language L=□ anbn□ n□ 0□ L = \□ a^n b^n □ n \geq 0\□ L=□n anbn□ n□0□ .

Unit 4: Pushdown Automata (PDA)

31. What is a Pushdown Automaton (PDA)? How does it differ from a finite automaton?
32. Define deterministic PDA and provide an example.
33. Describe the top-down parsing approach.
34. Convert a PDA to an equivalent CFG. Provide an example.
35. Explain bottom-up parsing and its applications.
36. Construct a PDA for the language L=□ anbn□ n□ 0□ L = \□ a^n b^n □ n \geq 0\□ L=□ anbn□ n□ 0□ .
37. Convert the CFG S□ aSb□ S \rightarrow aSb □ \epsilonS□ aSbinto an equivalent PDA.
38. State and explain the pumping lemma for context-free languages (CFLs).
39. What are the closure properties of context-free languages? Give examples.
40. Differentiate between deterministic PDA and non-deterministic PDA.

Unit 5: Turing Machines (TM)

41. Define a Turing machine and provide a simple example.
42. Explain the Church-Turing thesis.
43. How can a Turing machine compute a function? Provide an example.
44. Combine two Turing machines to perform sequential computation. Explain the process.
45. List and describe the variations of Turing machines.
46. What is a universal Turing machine? How is it different from an ordinary Turing machine?
47. Explain the halting problem with an example.
48. What are recursively enumerable languages? How do they relate to recursive languages?
49. Define primitive recursive functions with an example.
50. What are recursive predicates? Explain bounded operations with examples.

Atmiya University
Rajkot

Course Code	Course Name
18BTCECC203	Web Designing

Unit 1: Introduction to Web Designing

1. What are the key principles of effective web design?
2. How do browser compatibility issues affect web design?
3. Explain the concept of "User-Centric Design" in web development.
4. What are some common web design tools used in the industry?
5. What is the importance of a sitemap in website design?
6. How do you plan and publish a website effectively?
7. What are the best practices for designing user-friendly navigation on a website?
8. Why is cross-browser compatibility important in web design?
9. What factors contribute to the aesthetic appeal of a website?
10. What role does mobile responsiveness play in web design?

Unit 2: HTML

11. What is the difference between HTML5 and previous versions of HTML?
12. What are HTML elements and how do they work in a webpage?
13. Define attributes in HTML and give examples.
14. List and explain the various text formatting elements in HTML.
15. How do you create lists and tables using HTML?
16. What is the role of hyperlinks in HTML? How do you create them?
17. How can you add colors to a webpage using HTML?
18. How do you insert images into a webpage using HTML?
19. What are forms in HTML? Explain the key elements of a form.
20. What is the purpose of an iframe in HTML, and how do you use it?
21. What is the difference between XHTML and HTML?
22. Explain the role of meta tags in an HTML document.
23. What are semantic elements in HTML, and why are they important?
24. How do you define a document□s character encoding in HTML?

Unit 3: CSS

25. What are the new features introduced in CSS3?
26. Explain the different types of stylesheets in CSS.
27. What are CSS selectors? Provide examples.
28. How do you set the background properties of an element in CSS?
29. How do you create and style a list using CSS?
30. How do you apply CSS to text and fonts on a webpage?
31. What is the purpose of CSS links, and how are they styled?
32. How do you style tables using CSS?
33. Explain the concept of positioning in CSS and its different types.
34. How do you create a navigation bar using CSS?
35. What are dropdown menus in CSS, and how do you create them?

Atmiya University
Rajkot

36. What is the CSS box model, and why is it important for layout design?
37. Explain how CSS animations are created and provide an example.
38. How do you create a gradient background using CSS?
39. What is CSS Grid, and how does it help in web layout design?
40. What are some common challenges in using CSS for responsive design?

Unit 4: XML

41. What is XML, and how is it different from HTML?
42. What are the primary uses of XML in web development?
43. How do you create a simple XML document? Provide an example.
44. What are the key components of an XML document?
45. Explain the difference between DTD (Document Type Definition) and XML Schemas.
46. How do you validate an XML document using a DTD or schema?
47. What are the advantages of using XML for data storage and communication?
48. How can XML be used in conjunction with CSS to style data?
49. What is the role of namespaces in XML?
50. How do you parse an XML document using a programming language like JavaScript?

Atmiya University
Rajkot

Web Programming (1 BTCECC404)

Question Bank – 1 Marks Questions

Sr. No.	Unit	Questions	Marks
1	1	What are JavaScript Cookies?	1
2	1	List out all the methods to declare a variable in JavaScript.	1
3	1	What would be the result of ”11” 2	1
4	2	Describe Error handling in JavaScript.	1
	2	What is the isNAN() function in JavaScript?	1
	2	How can you integrate HTML with AngularJS?	1
	2	Define AngularJS	1
	3	Give full form of PHP.	1
	3	State True or False: PHP Variables are case sensitive.	1
10	3	PHP Variable name should start with which special character?	1
11	4	How many types of Arrays are there in PHP.	1
12	4	How we can write multiline comment in PHP?	1
13	4	Which operator is used for Concatenation in PHP?	1
14		State True or False: Numeric Array will have their index as a String.	1
1		Define CRUD Operation.	1

Atmiya University Rajkot

1		Write syntax to create DB connection.	1

Question Bank – 4 & Marks Questions

Sr. No.	Unit	Questions	Marks
1	1	Write a JavaScript code to find first 10 prime numbers.	4
2	1	Explain pop-up boxes in JavaScript with example.	4
3	1	Explain event handling in JavaScript with proper example.	4
4	1	Explain scope of variable with the help of example in JavaScript also explain arrays with syntax.	4
	1	Explain scope of variable with the help of example in JavaScript also explain arrays with syntax.	
	1	Why is JavaScript called client-side scripting language? Explain advantages of JavaScript.	
	1	Design HTML form which includes two field username and password. Write JavaScript code to show and hide password.	
	2	Define AngularJS and what are the key features of it?	4
	2	What is Model-View-Controller in AngularJS?	
10	2	Enlist the inbuilt object of JavaScript. Explain any one in detail.	
11	2	Write a syntax to send sample HTTP POST request in AngualrJS?	4
12	2	What do the services represent in AngularJS? What are directives?	4

Atmiya University Rajkot

13	2	How can you integrate AngularJS with HTML?	
14	2	What is Model-View-Controller in AngularJS?	
1	3	Give the difference between Client side Scripting and Server Side Scripting.	4
1	3	Differentiate between GET and POST method	4
1	3	What is the role of Cookies in Web Browser?	4
1	4	What is PHP? How can you connect to database in PHP? Show the simple database operation using PHP with proper example.	
1	4	Write PHP script to make sum of first 10 even numbers.	4
20		Write a PHP script to open, close, read and write into a file	
21	3	What are the different types of arrays in PHP? Explain with example to process the arrays in PHP.	
22	3	Explain features of PHP? Discuss various types of control statements in PHP.	4
23	4	Explain session in PHP with proper example.	4
24	3	What is an associative array in PHP? Give Example	4
2		Explain the concept of Type Conversion in PHP, with example.	
2		Write a PHP program to store user registration (user-name, address, Date of Birth, age, pan card, gender) with mysql database.	
2		Write a php program to greet the user based on time.	4

Atmiya University Rajkot

ATMIYA UNIVERSITY

Faculty of Engineering and Technology

Department of Electrical Engineering

UG Semester – IV

Subject Code: - 18BTEEDC601

Subject Name: - Advance Electrical Machines

Question Bank

1. **What Is The Main Advantage Of The Doubly Fed Induction Machine (DFIM) Construction Compared To A Traditional Induction Machine?**
2. **In Which Direction Does The Rotor Current Flow In A Doubly Fed Induction Machine During Normal Operation?**
3. **How Does A Static Converter Contribute To The Control Of A Doubly Fed Induction Machine?**
4. **Explain The Concept Of Power Flow In A Doubly Fed Induction Machine During Both Motoring And Generating Modes.**
5. **What Role Does Voltage And Frequency Control Play In The Generation Mode Of A Doubly Fed Induction Machine Connected To The Grid?**
6. **How Does A Doubly Fed Induction Machine Contribute To The Efficiency Of Wind Energy Conversion In A Grid-Connected System?**
7. **Discuss The Specific Advantages Of Using A Doubly Fed Induction Machine In Mini/Micro Hydel Systems.**
8. **Why Is The Rotor Current Varied In A Doubly Fed Induction Machine, And How Does It Impact Its Performance?**
9. **Explain The Importance Of Grid Synchronization In The Context Of A Doubly Fed Induction Machine Operating In Grid-Connected Mode.**
10. **How Does The Doubly Fed Induction Machine Respond To Sudden Changes In Load or Disturbances In The Grid, And What Measures Can Be Taken To Enhance Its Dynamic Response?**

ATMIYA UNIVERSITY

Faculty of Engineering and Technology

Department of Electrical Engineering

UG Semester – IV

Subject Code: - 18BTEEDC601

Subject Name: - Advance Electrical Machines

Question Bank

1. **What Are The Primary Components Of A Switched Reluctance Motor (SRM) And How Are SRMs Classified Based On Their Construction?**
2. **Explain The Basic Working Principle Of A Switched Reluctance Motor And How It Differs From Other Types Of Electric Motors.**
3. **Briefly Describe The Equivalent Circuit Of A Switched Reluctance Motor And Its Significance In Understanding Motor Behavior.**
4. **What Factors Influence The Speed-Torque Characteristics Of A Switched Reluctance Motor, And How Do They Differ From Those Of Traditional Motors?**
5. **How Does The Modification Of Advance Angle And Dwell Angle Impact The Performance Of A Switched Reluctance Motor, And Why Are These Modifications Made?**
6. **What Methods Are Commonly Used For Position Sensing In Switched Reluctance Motors, And Why Is Accurate Position Sensing Crucial For Their Operation?**
7. **Explain The Role Of Converters In Switched Reluctance Motors, And Provide Examples Of Different Converter Topologies Used In SRM Drives.**
8. **How Is The Speed Of A Switched Reluctance Motor Controlled, And What Are The Key Considerations In Implementing Speed Control Strategies?**
9. **What Are Some Practical Applications Of Switched Reluctance Motors, And What Advantages Do They Offer In Specific Industrial Or Commercial Settings?**
10. **Discuss Some Challenges Associated With Switched Reluctance Motors And Potential Future Developments Or Advancements In SRM Technology.**

ATMIYA UNIVERSITY

Faculty of Engineering and Technology

Department of Electrical Engineering

UG Semester – IV

Subject Code: - 18BTEEDC601

Subject Name: - Advance Electrical Machines

Question Bank

1. **What Is The Main Advantage Of A Doubly Fed Induction Machine (DFIM) Over A Conventional Induction Machine?**
2. **In DFIM, What Is The Purpose Of The Dual Sets Of Windings In The Rotor?**
3. **How Does A DFIM Achieve Variable Speed Control?**
4. **What Is The Significance Of The Slip Rings And Brushes In A DFIM?**
5. **Explain The Concept Of Slip In The Context Of A DFIM.**
6. **What Are The Typical Applications Of Doubly Fed Induction Machines?**
7. **How Does The Rotor Circuit In A DFIM Contribute To Improving Performance?**
8. **What Is The Fundamental Operating Principle Of A Switched Reluctance Motor (SRM)?**
9. **How Does An SRM Differ From Other Types Of Motors In Terms Of Construction?**
10. **What Is The Role Of Electronic Switches In An SRM?**
11. **Why Is Torque Production In An SRM Highly Dependent On Rotor Position?**
12. **What Are The Advantages Of Using An SRM In Certain Applications?**
13. **Explain The Concept Of Step-Wise Torque Production In SRMs.**
14. **What Are The Challenges Associated With The Control Of SRMs?**
15. **How Does A Brushless DC Motor Differ From A Traditional Brushed DC Motor?**
16. **What Is The Role Of Electronic Commutation In BLDC Motors?**
17. **What Are The Advantages Of Using A BLDC Motor In Comparison To Brushed DC Motors?**
18. **How Does The Back Electromotive Force (EMF) Influence The Performance Of A BLDC Motor?**
19. **In What Applications Are Brushless DC Motors Commonly Used?**
20. **Explain The Basic Structure Of A BLDC Motor And Its Components.**
21. **What Is Meant By Trapezoidal And Sinusoidal Control In BLDC Motors?**
22. **How Do Linear Machines Differ From Rotary Machines In Terms Of Motion?**
23. **What Are The Key Advantages Of Linear Machines In Certain Applications?**
24. **Explain The Basic Operating Principle Of A Linear Induction Motor.**
25. **How Are Linear Synchronous Motors Different From Linear Induction Motors?**

26. **What Are The Common Applications Of Linear Machines?**
27. **What Distinguishes A Stepper Motor From Other Types Of Motors In Terms Of Control?**
28. **How Is The Step Angle Of A Stepper Motor Defined?**
29. **What Are The Different Types Of Stepper Motors Based On Their Construction?**
30. **How Does Micro-Stepping Improve The Performance Of Stepper Motors?**
31. **What Is The Significance Of The Rotor Teeth In A Stepper Motor?**
32. **How Is The Speed Of A Stepper Motor Controlled?**
33. **Compare The Torque-Speed Characteristics Of The Mentioned Motor Types.**
34. **What Are The Primary Factors Influencing The Efficiency Of Electric Motors?**
35. **Explain The Importance Of Feedback Systems In The Control Of These Motors.**
36. **How Do These Motors Contribute To Energy Efficiency In Various Applications?**
37. **Discuss The Role Of Power Electronics In The Operation Of These Motors.**
38. **What Are The Environmental Considerations Associated With The Use Of These Motors?**
39. **Describe A Real-World Application Where A Combination Of These Motor Types Might Be Used.**
40. **How Has The Development Of These Motor Technologies Contributed To Advancements In Automation And Robotics?**

Atmiya University

ATMIYA UNIVERSITY

Faculty of Engineering and Technology

Department of Electrical Engineering

UG Semester – VII

Subject Code: - 18BTEECC801

Subject Name: - Commissioning Of Electrical Equipments

Question Bank

1. **What Are The Primary Steps Involved In The Commissioning Of A Transformer?**
2. **Why Is A Solid Foundation Crucial For The Proper Functioning Of A Transformer, And What Are The Key Considerations In Designing A Transformer Foundation?**
3. **Name Two Essential Tests Performed On Transformer Oil During Commissioning And Explain Their Significance.**
4. **Briefly Outline The Procedure For Filtering Transformer Oil During Commissioning.**
5. **Why Is The Drying Out Process Necessary During The Commissioning Of A Transformer, And What Methods Are Commonly Used For This Purpose?**
6. **What Are The Main Tests Conducted On Transformer Windings, And How Do They Ensure The Reliability Of The Transformer?**
7. **Enumerate At Least Two Tests Carried Out On Transformer Bushings During Commissioning And Describe Their Purposes.**
8. **Name Three Auxiliary Systems Commonly Associated With Transformers And One Safety Device, Highlighting Their Importance In Transformer Operation.**
9. **Outline Two Routine Maintenance Steps For Transformers And Suggest A Suitable Maintenance Schedule For Ensuring Long-Term Reliability.**
10. **Identify Two Common Causes Of Troubles Or Failures In Transformers And Suggest Preventive Measures To Mitigate These Issues.**

ATMIYA UNIVERSITY

Faculty of Engineering and Technology

Department of Electrical Engineering

UG Semester – VII

Subject Code: - 18BTEECC801

Subject Name: - Commissioning Of Electrical Equipments

Question Bank

1. **What Are The Key Considerations For The Installation Of An Induction Motor?**
2. **Why Is Proper Commissioning Important For The Performance Of An Induction Motor?**
3. **How Does The Location Of An Induction Motor Impact Its Efficiency And Performance?**
4. **Provide Examples Of Suitable Locations For Installing Induction Motors.**
5. **Why Is A Solid Foundation Crucial For The Proper Functioning Of An Induction Motor?**
6. **What Are The Typical Materials Used For Constructing Foundations For Induction Motors?**
7. **Name Two Types Of Control Apparatus Commonly Used With Induction Motors.**
8. **How Does The Control Apparatus Contribute To The Operational Efficiency Of An Induction Motor?**
9. **What Is The Significance Of Properly Fitting Windings In An Induction Motor?**
10. **Describe The Process Of Fitting Windings In An Induction Motor.**

ATMIYA UNIVERSITY

Faculty of Engineering and Technology

Department of Electrical Engineering

UG Semester – VII

Subject Code: - 18BTEECC801

Subject Name: - Commissioning Of Electrical Equipments

Question Bank

1. **What Is The Primary Purpose Of Commissioning Synchronous Machines?**
2. **Define Synchronous Machines And Provide An Example Of Their Application.**
3. **Why Is It Important To Conduct Insulation Resistance Tests During The Commissioning Of Synchronous Machines?**
4. **What Role Does Synchronizing Play In The Commissioning Process Of Synchronous Machines?**
5. **Explain The Significance Of Performing A No-Load Test During Commissioning.**
6. **Briefly Describe The Key Steps Involved In The Commissioning Of DC Machines.**
7. **What Is The Purpose Of A Load Test During The Commissioning Of A DC Machine?**
8. **Why Is It Crucial To Check And Adjust The Brush Gear During Commissioning?**
9. **Explain The Importance Of Armature And Field Resistance Measurements During Commissioning.**
10. **What Safety Measures Should Be Taken During The Commissioning Of DC Machines?**
11. **What Is The Role Of Substation Equipment In An Electrical Power System?**
12. **Why Is It Necessary To Perform Insulation Resistance Tests On Substation Equipment During Commissioning?**
13. **Explain The Purpose Of A Relay Testing During Substation Commissioning.**
14. **What Are The Key Considerations When Commissioning Transformers In A Substation?**
15. **Why Is It Important To Verify The Correct Operation Of Protective Relays During Commissioning?**
16. **Define Commissioning And Explain Its Significance In The Electrical Engineering Field.**
17. **What Documentation Is Typically Required For The Commissioning Process?**
18. **Discuss The Importance Of A Commissioning Checklist In Ensuring A Systematic Approach.**
19. **How Do Environmental Factors, Such As Temperature And Humidity, Affect The Commissioning Process?**
20. **Why Is It Necessary To Conduct Performance Tests On Electrical Equipment During Commissioning?**

21. **Why Is It Necessary To Dry Out Induction Machines, And What Methods Are Commonly Used?**
22. **What Precautions Should Be Taken During The Drying Out Process To Ensure Motor Longevity?**
23. **What Is Meant By "Duty Standard" In The Context Of Cooling And Protection For Induction Motors?**
24. **Name Two Cooling Methods And Two Protection Methods Used In Induction Motors.**
25. **List Three Common Tests Performed On Induction Motors During And After Installation.**
26. **How Do These Tests Help In Ensuring The Reliability Of The Motor?**
27. **Name Three Common Issues That May Arise In Induction Motors And How They Can Be Troubles Hooted.**
28. **Why Is Regular Troubleshooting Important For The Maintenance Of Induction Motors?**
29. **What Are The Key Aspects Of Routine Maintenance For Induction Motors?**
30. **How Does Regular Maintenance Contribute To The Overall Lifecycle Of An Induction Motor?**
31. **What Are The Primary Steps Involved In The Commissioning Of A Transformer?**
32. **Why Is A Solid Foundation Crucial For The Proper Functioning Of A Transformer, And What Are The Key Considerations In Designing A Transformer Foundation?**
33. **Name Two Essential Tests Performed On Transformer Oil During Commissioning And Explain Their Significance.**
34. **Briefly Outline The Procedure For Filtering Transformer Oil During Commissioning.**
35. **Why Is The Drying Out Process Necessary During The Commissioning Of A Transformer, And What Methods Are Commonly Used For This Purpose?**
36. **What Are The Main Tests Conducted On Transformer Windings, And How Do They Ensure The Reliability Of The Transformer?**
37. **Enumerate At Least Two Tests Carried Out On Transformer Bushings During Commissioning And Describe Their Purposes.**
38. **Name Three Auxiliary Systems Commonly Associated With Transformers And One Safety Device, Highlighting Their Importance In Transformer Operation.**
39. **Outline Two Routine Maintenance Steps For Transformers And Suggest A Suitable Maintenance Schedule For Ensuring Long-Term Reliability.**
40. **Identify Two Common Causes Of Troubles Or Failures In Transformers And Suggest Preventive Measures To Mitigate These Issues.**

Atmiya University

ATMIYA UNIVERSITY

Faculty of Engineering and Technology

Department of Electrical Engineering

UG Semester – IV

Subject Code: - 18BTEECC602

Subject Name: - Electrical Machine Design–I

Question Bank

1. **Define Specific Electric Loading In The Context Of Electrical Machines. Why Is Specific Electric Loading An Important Parameter In Machine Design?**
2. **Explain The Concept Of Specific Magnetic Loading In Transformers. How Does Specific Magnetic Loading Impact The Design And Performance Of Transformers?**
3. **What Is The Output Coefficient In The Context Of Electrical Machines? How Is The Output Coefficient Calculated, And What Does It Indicate About Machine Efficiency?**
4. **Write The General Output Equation For Transformers. Discuss The Significance Of The Components In The Transformer Output Equation.**
5. **Derive The General Output Equation For Rotating Machines.**
6. **List And Explain Factors That Significantly Affect The Size Of Electrical Machines.**
7. **Describe Common Methods Used For Cooling Transformers.**
8. **Compare The Cooling Techniques Employed In Transformers And Rotating Machines.**
9. **Discuss The Sources Of Heating In Rotating Machines. How Is The Heat Dissipation Managed In The Design Of Rotating Machines?**
10. **Explain The Mechanisms Of Heating In Transformers. What Are The Key Factors That Contribute To The Heating Of Transformers During Operation?**

ATMIYA UNIVERSITY

Faculty of Engineering and Technology

Department of Electrical Engineering

UG Semester – IV

Subject Code: - 18BTEECC602

Subject Name: - Electrical Machine Design–I

Question Bank

1. **What Are The Primary Criteria Used For The Classification Of Three-Phase Transformers, And How Does It Impact Their Application?**
2. **Explain The Differences Between Delta And Star (Wye) Windings In Three-Phase Transformers. When Would You Prefer One Over The Other, And Why?**
3. **Define Window Space Factor And Stacking Factor In The Context Of Transformers. How Do These Factors Influence The Design And Performance Of A Transformer?**
4. **What Is The Purpose Of Tapings In A Transformer? Describe The Significance Of Having Multiple Tapings And How They Affect The Transformer's Output Voltage.**
5. **Elaborate On The Relationship Between The Yoke And Core Cross-Sectional Areas In A Transformer. How Does This Relationship Impact The Transformer's Efficiency And Magnetic Performance?**
6. **Briefly Explain The Importance Of The Core In A Three-Phase Transformer. How Does The Choice Of Core Material Affect The Transformer's Efficiency And Losses?**
7. **What Is Voltage Regulation In A Transformer, And Why Is It Important? Describe The Factors That Contribute To Voltage Regulation And How It Can Be Improved.**
8. **Differentiate Between A Conventional Transformer And An Autotransformer.**

Atmiya University

ATMIYA UNIVERSITY

Faculty of Engineering and Technology

Department of Electrical Engineering

UG Semester – IV

Subject Code: - 18BTEECC602

Subject Name: - Electrical Machine Design–I

Question Bank

1. **What Is The Primary Purpose Of Electrical Design In Engineering?**
2. **Define The Term 'Load' In The Context Of Electrical Design.**
3. **Explain The Significance Of Voltage In Electrical Systems.**
4. **Why Is Insulation Important In Electrical Design, And What Materials Are Commonly Used For Insulation?**
5. **Describe The Basic Components Of An Electrical Circuit.**
6. **What Is The Primary Function Of A Three-Phase Transformer?**
7. **Differentiate Between Single-Phase And Three-Phase Transformers.**
8. **Explain The Concept Of Phase Transformation In A Three-Phase Transformer.**
9. **Why Are Three-Phase Transformers Preferred In Power Distribution Systems?**
10. **What Are The Typical Applications Of Three-Phase Transformers In Industrial Settings?**
11. **List And Explain The Main Dimensions Of A Three-Phase Transformer.**
12. **How Do The Physical Dimensions Of A Transformer Relate To Its Power Handling Capacity?**
13. **What Is The Significance Of The Core In The Main Dimensions Of A Transformer?**
14. **Describe The Importance Of Cooling Systems In The Design Of Large Three-Phase Transformers.**
15. **How Does The Choice Of Material For Winding Affect The Main Dimensions Of A Transformer?**
16. **Define The Term 'Parameter' In The Context Of Electrical Engineering.**
17. **Explain The Process Of Estimating Resistance In An Electrical Circuit.**
18. **What Are The Factors Considered When Estimating Inductance In An Electrical System?**
19. **Discuss The Importance Of Capacitance Estimation In Power Systems.**
20. **How Can Impedance Be Accurately Estimated In Electrical Circuits?**
21. **What Are The Key Components Of A Dc Machine?**
22. **Explain The Role Of Armature Winding In Dc Machine Design.**
23. **Discuss The Significance Of Commutator And Brushes In A Dc Machine.**
24. **How Does The Pole Configuration Impact The Performance Of A Dc Machine?**

25. **What Factors Influence The Choice Of Materials In The Design Of Dc Machine Components?**
26. **Define The Term 'Kilovolt-Ampere' (Kva) In Electrical Engineering.**
27. **Explain The Difference Between Apparent Power And Real Power.**
28. **What Is The Purpose Of A Neutral Wire In Electrical Systems?**
29. **Discuss The Advantages Of Using A Star (Wye) Connection In Three-Phase Systems.**
30. **How Does A Delta Connection Differ From A Star Connection In A Three-Phase System?**
31. **Define The Term 'Efficiency' In The Context Of Electrical Devices.**
32. **Explain The Principle Of Electromagnetic Induction.**
33. **Discuss The Significance Of Power Factor In Electrical Systems.**
34. **What Is The Purpose Of A Transformer In Power Distribution?**
35. **Describe The Basic Operation Of A Dc Generator.**
36. **Explain The Concept Of Short-Circuit Ratio In Transformers.**
37. **Discuss The Importance Of Insulation Coordination In Electrical Design.**
38. **What Is The Role Of Fuses And Circuit Breakers In Electrical Protection Systems?**
39. **Explain The Difference Between Synchronous And Asynchronous Machines.**
40. **Describe The Basic Construction Of A Power Transmission Line.**

Atmiya University

ATMIYA UNIVERSITY

Faculty of Engineering and Technology

Department of Electrical Engineering

UG Semester –VI

Subject Code: - 18BTEECC603

Subject Name: - Electrical Power System – II

Question Bank

1. **Define The Terms Voltage And Current In The Context Of A Transmission Line.**
2. **Explain The Significance Of The Voltage And Current Phasors In Analyzing Transmission Line Behavior.**
3. **What Criteria Are Used To Classify Transmission Lines, And Why Is Classification Important In Power Systems?**
4. **Briefly Describe The Differences Between Short, Medium, And Long Transmission Lines.**
5. **Provide The General Equations For A Short Transmission Line And Explain The Conditions Under Which A Transmission Line Is Considered Short.**
6. **How Do The Equations For Medium And Long Transmission Lines Differ From Those Of Short Lines? Explain.**
7. **What Factors Affect The Power Flow Through A Transmission Line, And How Is Power Flow Calculated In A Transmission System?**
8. **Discuss The Concept Of Surge Impedance Loading And Its Significance In Power**
9. **What Is A Circle Diagram, And How Is It Used In The Analysis Of Power Systems?**
10. **Explain The Information That Can Be Obtained From A Circle Diagram For A Transmission Line.**

ATMIYA UNIVERSITY

Faculty of Engineering and Technology

Department of Electrical Engineering

UG Semester –VI

Subject Code: - 18BTEECC603

Subject Name: - Electrical Power System – II

Question Bank

1. **What Is A Symmetrical Three-Phase Fault, And How Does It Differ From An Unsymmetrical Fault In A Power System?**
2. **Explain The Concept Of Transient Response In An RL Series Circuit. How Does The Transient Response Differ From The Steady-State Response?**
3. **Define Short Circuit In The Context Of A Synchronous Machine. How Does The Synchronous Reactance Play A Crucial Role In Determining Short Circuit Conditions?**
4. **What Is A Bus Impedance Matrix In The Context Of Power Systems? How Is It Used To Represent The Equivalent Network Of A Power System Bus?**
5. **Enumerate The Key Factors To Consider When Selecting A Circuit Breaker For A Power System. Why Is The Selection Of The Right Circuit Breaker Important?**
6. **Describe The Sequence Components In The Context Of Symmetrical Three-Phase Faults. How Do They Help In Analyzing Fault Conditions?**
7. **Discuss The Time Constant Of An RL Series Circuit During Transient Response. How Does The Time Constant Affect The Behavior Of The Circuit?**
8. **Discuss The Time Constant Of An RL Series Circuit During Transient Response. How Does The Time Constant Affect The Behavior Of The Circuit?**
9. **How Is A Bus Impedance Matrix Used In Solving Power Flow Problems In A Large Interconnected Power System? Provide An Example.**
10. **What Are The Different Types Of Circuit Breakers Used In Power Systems? Briefly Explain The Application And Advantages Of Each Type.**

ATMIYA UNIVERSITY

Faculty of Engineering and Technology

Department of Electrical Engineering

UG Semester –VI

Subject Code: - 18BTEECC603

Subject Name: - Electrical Power System – II

Question Bank

1. What Is The Primary Purpose Of A Transmission Line In A Power System?
2. Define The Terms 'Voltage' And 'Current' In The Context Of A Transmission Line.
3. Explain The Concept Of Line Capacitance In A Transmission Line.
4. How Does The Impedance Of A Transmission Line Affect The Flow Of Current?
5. Describe The Significance Of The Characteristic Impedance In A Transmission Line.
6. What Is A Symmetrical Three-Phase Fault In A Power System?
7. Explain How A Short Circuit In A Three-Phase System Can Lead To Symmetrical Faults.
8. What Are The Key Characteristics Of A Balanced Three-Phase Fault?
9. How Does A Symmetrical Fault Impact The Voltage And Current In A Power System?
10. Discuss The Importance Of Protection Mechanisms For Symmetrical Faults.
11. Define Symmetrical Components In The Context Of Power Systems.
12. What Is The Purpose Of Using Symmetrical Components In Power System Analysis?
13. Explain The Concept Of Positive Sequence Components.
14. How Are Negative Sequence Components Generated In A Power System?
15. Discuss The Significance Of Zero Sequence Components.
16. Differentiate Between Symmetrical And Unsymmetrical Faults.
17. What Are The Common Types Of Unsymmetrical Faults In Power Systems?
18. How Does An Unsymmetrical Fault Impact The Stability Of A Power System?
19. Explain The Role Of Protective Relays In Detecting And Mitigating Unsymmetrical Faults.
20. Discuss The Challenges Associated With Analyzing Unsymmetrical Faults.
21. Define Transient In The Context Of Power Systems.
22. What Factors Contribute To The Occurrence Of Transients In A Power System?
23. Explain The Significance Of Transient Stability In Power System Operation.
24. How Do Surge Arresters Help In Protecting Power Systems From Transients?
25. Discuss The Role Of Circuit Breakers In Handling Transient Conditions.
26. Describe The Process Of Fault Clearing In A Power System.
27. How Does The Choice Of Conductors Influence The Performance Of A Transmission Line?

28. **Explain The Concept Of Line Charging In A Power Transmission System.**
29. **Discuss The Importance Of Reactance In The Analysis Of Transmission Lines.**
30. **What Is The Significance Of Relay Coordination In Power System Protection?**
31. **How Are Symmetrical Components Used In Fault Analysis?**
32. **Explain The Concept Of Sequence Networks In Symmetrical Component Analysis.**
33. **Discuss The Advantages Of Using Symmetrical Components For Fault Calculations.**
34. **How Does A Power System Behave Differently During A Symmetrical Fault Compared To An Unsymmetrical Fault?**
35. **In What Situations Might A Power System Experience Simultaneous Symmetrical And Unsymmetrical Faults?**
36. **How Can Unsymmetrical Faults Affect The Stability Of Generators In A Power System?**
37. **Discuss The Role Of Relays In Detecting And Isolating Unsymmetrical Faults To Prevent Cascading Failures.**
38. **Explain The Concept Of Fault Ride-Through Capability In Power Systems.**
39. **How Do Unbalanced Faults Impact The Protection Coordination In A Power System?**
40. **Describe The Measures Taken To Mitigate The Impact Of Unsymmetrical Faults On Power System Stability.**

Atmiya University

ATMIYA UNIVERSITY

Faculty of Engineering and Technology

Department of Electrical Engineering

UG Semester – VI

Subject Code: - 18BTEECC601

Subject Name: - Power Electronics - II

Question Bank

1. **What Is The Primary Function Of An Inverter In A Electrical Engineering Applications?**
2. **Briefly Explain The Classification Of Inverters Based On Their Output Waveform.**
3. **What Are The Main Types Of Inverters Based On Their Classification?**
4. **Explain The Difference Between 180-Degree Conduction And 120-Degree Conduction In Three-Phase Bridge Inverters.**
5. **What Is The Principle Of Pulse Width Modulation (PWM) In Inverters?**
6. **Differentiate Between Unipolar And Bipolar Pulse Width Modulation In The Context Of Inverters.**
7. **How Does The Switching Frequency Impact The Harmonic Spectrum In Inverters?**
8. **Briefly Explain The Concepts Of Selective Harmonic Elimination And Hysteresis Band Current Control PWM In Inverters.**
9. **What Is The Space Vector Pulse Width Modulation (SVPWM) Technique, And How Does It Improve Inverter Performance?**
10. **Provide An Overview Of Gate Driver ICs.**

ATMIYA UNIVERSITY

Faculty of Engineering and Technology

Department of Electrical Engineering

UG Semester –VI

Subject Code: - 18BTEECC601

Subject Name: - Power Electronics - II

Question Bank

1. **Explain The Concept Of On-Off (Integral Cycle) Control And Phase Control In AC-AC Converters.**
2. **Discuss Various Single-Phase Full-Wave AC-AC Controllers With Resistive (R), Inductive (L), And R-L Loads. Provide Diagrams To Illustrate Each Configuration.**
3. **Compare And Contrast The Analysis For Phase Control And Integral Cycle Control In AC-AC Converters. Highlight The Advantages And Disadvantages Of Each Method.**
4. **Explain The Gating Requirements For AC Regulators In The Context Of Phase Control. Discuss How The Firing Angle Influences The Output Waveform.**
5. **Elaborate On The Sequence Control Of AC Regulators. How Does It Contribute To Achieving Controlled Output In AC-AC Converters? Provide Examples To Illustrate.**
6. **Describe 3-Phase Full-Wave Converter Configurations With Y (Star) And Δ (Delta) Connected Loads.**
7. **Explain The Concept Of AC Voltage Control Using Pulse Width Modulation (PWM).**
8. **Define And Explain The Working Principle Of A Matrix Converter. Highlight Its Advantages Over Traditional AC-AC Converters And Provide Its Applications.**

ATMIYA UNIVERSITY

Faculty of Engineering and Technology

Department of Electrical Engineering

UG Semester –VI

Subject Code: - 18BTEECC601

Subject Name: - Power Electronics - II

Question Bank

1. What Is The Primary Function Of A DC To AC Converter?
2. Explain The Difference Between A Square Wave Inverter And A Sine Wave Inverter.
3. How Does A PWM (Pulse Width Modulation) Technique Improve The Output Waveform Of An Inverter?
4. Mention Two Applications Where DC To AC Inverters Are Commonly Used.
5. What Is The Significance Of The Inverter's Output Frequency In AC Power Systems?
6. Describe The Basic Working Principle Of A Voltage Source Inverter (VSI).
7. Explain The Term "Total Harmonic Distortion" In The Context Of Inverter Output.
8. What Are The Advantages Of Using An Inverter With An Isolation Transformer In Certain Applications?
9. How Does The Choice Of Switching Devices Affect The Performance Of A DC To AC Inverter?
10. Discuss One Limitation Or Challenge Associated With DC To AC Inverters.
11. Define The Purpose Of An AC-AC Converter With Voltage Control.
12. Differentiate Between Step-Up And Step-Down AC-AC Converters.
13. How Does An Autotransformer-Based AC-AC Converter Achieve Variable Voltage Output?
14. Explain The Role Of Tapped Windings In An AC-AC Converter With Voltage Control.
15. What Is The Advantage Of Using An AC-AC Converter With Voltage Control In Industrial Settings?
16. Describe The Concept Of Phase Angle Control In The Context Of AC Voltage Regulation.
17. Mention One Disadvantage Or Limitation Of AC-AC Converters With Voltage Control.
18. How Does A Variable Turns Ratio Transformer Contribute To Voltage Control In Certain AC-AC Converters?
19. Discuss The Impact Of Load Variations On The Performance Of AC-AC Converters With Voltage Control.
20. What Is The Primary Function Of An AC-AC Converter With Frequency Control?

Atmiya University

21. **Differentiate Between A Fixed-Frequency AC-AC Converter And A Variable-Frequency AC-AC Converter.**
22. **Discuss One Advantage Of Using A Matrix Converter For Frequency Control.**
23. **How Does A Cycloconverter Change The Frequency Of The Output Waveform?**
24. **Describe The Concept Of Forced Commutation In Frequency Control Circuits.**
25. **What Is The Impact Of Changing The Frequency On The Speed Of An AC Motor In A Variable-Frequency Drive System?**
26. **Explain The Role Of Gate Turn-Off Thyristors (GTOs) In Frequency Control Converters.**
27. **Discuss A Limitation Or Challenge Associated With AC-AC Converters With Frequency Control.**
28. **What Is The Purpose Of An AC Motor Drive For Asynchronous Motors?**
29. **Explain The Term "Variable Frequency Drive" In The Context Of Asynchronous Motor Control.**
30. **How Does Vector Control Improve The Performance Of An AC Motor Drive For Asynchronous Motors?**
31. **Discuss One Advantage Of Using An Inverter For Speed Control In Asynchronous Motor Drives.**
32. **Describe The Difference Between Open-Loop And Closed-Loop Control In AC Motor Drives.**
33. **What Is The Significance Of The Slip In Asynchronous Motor Drives?**
34. **Explain The Role Of The Rotor In The Operation Of An Asynchronous Motor.**
35. **How Does Regenerative Braking Work In The Context Of Asynchronous Motor Drives?**
36. **Discuss A Limitation Or Challenge Associated With AC Motor Drives For Asynchronous Motors.**
37. **What Is The Primary Function Of An AC Motor Drive For Synchronous Motors?**
38. **Differentiate Between The Stator And Rotor In A Synchronous Motor.**
39. **How Does A Synchronous Condenser Function In Power Systems, And What Role Does The Motor Drive Play In This Context?**
40. **Describe The Significance Of The Synchronous Speed In Synchronous Motor Drives.**
41. **Explain The Term "Power Factor Correction" And Its Relevance In Synchronous Motor Drives.**
42. **How Does The Excitation Control System Contribute To The Performance Of A Synchronous Motor Drive?**
43. **Discuss A Limitation Or Challenge Associated With AC Motor Drives For Synchronous Motors.**

Atmiya University

ATMIYA UNIVERSITY

Faculty of Engineering and Technology

Department of Electrical Engineering

UG Semester – VIII

Subject Code: - 18BTEECC803

Subject Name: - Power System Operation & Control

Question Bank

1. **Write Short Note On Load Forecasting.**
2. **Write Short Note On "Reactive Load Forecasting. "**
3. **Explain The Role Of Load Forecasting In Power System Planning And Operation.**
4. **Write A Short Note For The Estimation Of Average And Trend Term In Load Fore-Casting.**
5. **Explain Time Series Approach For The Estimation Of Ys (K).**
6. **What Purpose Does Medium Term Forecasting Serve?**
7. **Explain Time Series Approach With Auto Regressive Models And Auto Regressive Moving Average Models For Load Forecasting.**

ATMIYA UNIVERSITY

Faculty of Engineering and Technology

Department of Electrical Engineering

UG Semester – VIII

Subject Code: - 18BTEECC803

Subject Name: - Power System Operation & Control

Question Bank

1. What Do You Mean By Power System Security? How Security Analysis Is Done? Explain Major Three Function Of A Power System Security And System State Classification.
2. Draw Block Diagram Of Power System Static Security Levels & Explain Each In Detail.
3. Differentiate Between Normal, Alert And Emergency State Of A Power System. Explain Emergency Control In Brief.
4. What Are The Power System Operating States? Which Control Action Is To Be Taken According To The Operation State?

   OR

   Define Various Operating States Of Power System, Nature Of Various Control Actions And Their Significance.
5. Explain Modeling For Contingency Analysis.
6. Write Short Note On Contingency Selection. And Give Flow Chart For Contingency Selection.
7. Write A Short Note On Sensitivity Factors Used In Analysis Of Security OfPower System.
8. Explain What Is Performance Index?
9. Define Generation Shift Factor And Line Outage Distribution Factor In Relation To Security Analysis.

ATMIYA UNIVERSITY

Faculty of Engineering and Technology

Department of Electrical Engineering

UG Semester – VIII

Subject Code: - 18BTEECC803

Subject Name: - Power System Operation & Control

Question Bank

1. Differentiate Automatic Generation Control Action From Governor Action.
2. Explain Turbine Speed Governing Mechanism (System) With Neat Diagram.
3. Derive The Mathematical Model Of Speed Governing System.
4. Derive The Mathematical Model Of Generator-Load System.
5. Write A Short Note On Proportional Plus Integral Control.
6. Explain In Detail Two Area Load Frequency Control.
7. With Necessary Block Diagrams Explain In Detail Automatic Voltage Control And Automatic Reactive Power Control.
8. Two Generating Units Rated For 250 Mw And 400 Mw Have Governor Speed Regulation Of 6.0 And 6.4 Percent, Respectively, From No-Load To Full-Load, Respectively. They Are Operating In Parallel And Share A Load Of 500 Mw. Assuming Free Governor Action, Determine The Load Shared By Each Unit.
9. Discuss In Brief The Application Aspects Of The Primary And Secondary Automatic Load Frequency Control Loops.
10. Discuss Two-Area Frequency Control With Block Diagram.
11. List Main Components Of Automatic Voltage Control Scheme.
12. What Do You Mean By Power System Security? How Security Analysis Is Done? Explain Major Three Function Of A Power System Security And System State Classification.
13. Draw Block Diagram Of Power System Static Security Levels & Explain Each In Detail.
14. Differentiate Between Normal, Alert And Emergency State Of A Power System. Explain Emergency Control In Brief.
15. What Are The Power System Operating States? Which Control Action Is To Be Taken According To The Operation State?
16. Define Various Operating States Of Power System, Nature Of Various Control Actions And Their Significance.
17. Explain Modeling For Contingency Analysis.
18. Write Short Note On Contingency Selection. And Give Flow Chart For Contingency Selection.

19. **Write A Short Note On Sensitivity Factors Used In Analysis Of Security Of Power System.**
20. **Explain What Is Performance Index?**
21. **Define Generation Shift Factor And Line Outage Distribution Factor In Relation To Security Analysis.**
22. **What Are State Variables? What Is State Estimation? How The State Estimation Is Used In Power System?**
23. **Explain The Basic Solution Of Least Square Method.**
24. **What Is The Importance Of State Estimation In Any Power System Operation And Control? Give Application Of State Estimation In Power System.**
25. **Describe The Line Only Algorithm And Injection Only Algorithm For Power System State Estimating.**
26. **What Is Ill Conditioning? How It Can Be Checked?**
27. **In Weighted Least Square Estimation (WLSE) What Do Mean By Term "Weighted"? How It Affects The Estimation Procedure? Explain WLSE Method Of State Estimation In Detail.**
28. **Explain Significance Of 'W' In Weighted Least Square Estimation.**
29. **Explain WLSE Method For Static State Estimation Of Power System.**
30. **Explain How Estimation Of Nonlinear Measurements Is Done Using Weighted LSE.**
31. **What Do You Understand By Pseudo Measurement And Network Observability of Power System?**
32. **Explain Detail Structure And Elements Of Hessian Matrix (Hx).**
33. **Bad Data Are Necessary To Remove For State Estimation. How The Bad Measurement Data Are Processed In State Estimation Process? Explain How Bad Data Affects State Estimation Procedure? Explain Methods To Detect Bad Data.**
34. **Write Short Note On Load Forecasting.**
35. **Write Short Note On "Reactive Load Forecasting. "**
36. **Explain The Role Of Load Forecasting In Power System Planning And Operation.**
37. **Write A Short Note For The Estimation Of Average And Trend Term In Load Fore-Casting.**
38. **Explain Time Series Approach For The Estimation Of Ys (K).**
39. **What Purpose Does Medium Term Forecasting Serve?**
40. **Explain Time Series Approach With Auto Regressive Models And Auto Regressive Moving Average Models For Load Forecasting.**

Atmiya University

ATMIYA UNIVERSITY

Faculty of Engineering and Technology

Department of Electrical Engineering

UG Semester – VIII

Subject Code: - 18BTEECC803

Subject Name: - Power System Operation & Control

Tutorial No. : – 1

1. **Two Generating Units Rated For 250 Mw And 400 Mw Have Governor Speed Regulation Of 6.0 And 6.4 Percent, Respectively, From No-Load To Full-Load, Respectively. They Are Operating In Parallel And Share A Load Of 500 MW. Assuming Free Governor Action, Determine The Load Shared By Each Unit.**

2. **Estimate Two Values Random Variables X By Weighted Least Square Estimate Method For A Given Measurement Vector 'Y', Weighted Matrix 'W', And Coefficient Matrix 'H '.**

$$Y = \begin{bmatrix} 0.5 \\ 0.45 \\ 0.51 \end{bmatrix}, W = \begin{bmatrix} 1 & 0 & 0 \\ 0 & 1 & 0 \\ 0 & 0 & 1 \end{bmatrix}, H = \begin{bmatrix} 1 & 1 \\ 1 & 0 \\ 0 & 1 \end{bmatrix}$$

ATMIYA UNIVERSITY

Faculty of Engineering and Technology

Department of Electrical Engineering

UG Semester – VIII

Subject Code: - 18BTEECC803

Subject Name: - Power System Operation & Control

Tutorial No. : – 2

Example 1

Given Data:

Phase A Current (IA) = 20 A

Phase B Current (IB) = 20 A

Phase C Current (IC) = 20 A

Verify:

The Total Current In The System (I_Total)

The Average Current Per Phase (I_Avg)

Example 2

Given Data:

Power Factor (PF) = 0.9 (Lagging)

Apparent Power (S) = 100 KVA

Voltage (V) = 230 V (Line-To-Line)

Verify:

Active power (P)

Reactive power (Q)

ATMIYA UNIVERSITY

Faculty of Engineering and Technology

Department of Electrical Engineering

UG Semester – VIII

Subject Code: - 18BTEECC803

Subject Name: - Power System Operation & Control

Tutorial No. : – 3

1. **Find The Capacity Of Static VAR Compensator To Be Installed At A Bus With ±5% Voltage Fluctuation. The Short Circuit Capacity Is 5000 MVA.**

2. **A 250-Mw, 60-Hz Turbine Generator Set Has A Speed Regulation Of 5 Percent Based On Its Own Rating. The Generator Frequency Decreases From 60 Hz To A Steady State Value Of 59.7hz. Determine The Increase In The Turbine Power Output.**

ATMIYA UNIVERSITY

Faculty of Engineering and Technology

Department of Electrical Engineering

UG Semester – VIII

Subject Code: - 18BTEECC803

Subject Name: - Power System Operation & Control

Tutorial No. : – 4

1. **Drive The Expression For Steady State Frequency Change For Single Area System With The Following Cases. Changes In Load With Fixed Speed II. Changes In Speed With Fixed Demand**
2. **Give Classification Based On Lead Time And Forecasting Methodology.**
3. **Explain Load Predictions For Load Forecasting.**

ATMIYA UNIVERSITY

Faculty of Engineering and Technology

Department of Electrical Engineering

UG Semester – VIII

Subject Code: - 18BTEECC803

Subject Name: - Power System Operation & Control

Tutorial No. : – 5

1. **In Weighted Least Square Estimation (WLSE) What Do Mean By Term "Weighted"? How It Affects The Estimation Procedure? Explain WLSE Method Of State Estimation In Detail.**
2. **Bad Data Are Necessary To Remove For State Estimation. Explain. How Bad Data Affects State Estimation Procedure? Explain Methods To Detect Bad Data.**
3. **What Do You Mean By Deregulation And Restructuring Of Power System? How It Affects Power System? Explain Its Advantages And Disadvantages To Power Scenario Of India.**

ATMIYA UNIVERSITY

Faculty of Engineering and Technology

Department of Electrical Engineering

UG Semester – VIII

Subject Code: - 18BTEECC803

Subject Name: - Power System Operation & Control

Tutorial No. : – 6

1. **Explain Important Points Of Electricity Act - 2003.**
2. **State Different Load Forecasting Techniques. Explain In Detail The Reactive Load Forecasting. Also State Its Advantages.**
3. **Derive The Expression For Critical Receiving End Voltage And Critical Power Angle At Voltage Stability Limit For A Two Bus Power System.**

Atmiya University

ATMIYA UNIVERSITY

Faculty of Engineering and Technology

Department of Electrical Engineering

UG Semester – VIII

Subject Code: - 18BTEECC803

Subject Name: - Power System Operation & Control

Tutorial No. : – 7

1. **Explain The Characteristics Of (1) The Receiving End Voltage Of A Basic Power Transmission System For Varying System Reactance And, (2) The Characteristic Of Voltage V/S System Short Circuit Capacity For Any Fixed Value Of Real Power Flow Considering Leading, U.P.F. And Lagging Power Factors Load.**

2. **A Cable Has Surge Impedance Of 50 Ω And Operates At 500 Kv (L-L) At 50 Hz. If The Electrical Line Lengths Is 30 Deg. Equivalent, Find The Steady State Stability Limit. Obtain The Value Of The Transmission Angle And Reactive Power Requirements At Both Ends Of The Cable When The Transmitted Power Through The Cable Is 50 % Of The SIL Value. Assume Both Ends Of The Line Are Maintained At 500 Kv.**

Atmiya University

ATMIYA UNIVERSITY

Faculty of Engineering and Technology

Department of Electrical Engineering

UG Semester – VIII

Subject Code: - 18BTEECC803

Subject Name: - Power System Operation & Control

Tutorial No. : – 8

1. **Explain Role Of Load Dispatch Center In Power System. What Is Its Role As A Part Of National Grid?**
2. **Derive The Expression For Voltage Regulation Of A Transmission Line And Explain Its Relation With Reactive Power.**
3. **With Necessary Block Diagrams Explain Automatic Voltage And Reactive Power Control.**

Atmiya University

ATMIYA UNIVERSITY

Faculty of Engineering and Technology

Department of Electrical Engineering

UG Semester – VIII

Subject Code: - 18BTEECC803

Subject Name: - Power System Operation & Control

Tutorial No. : – 9

1. **What Is Power System Security? Explain Major Three Function Of A Power System Security And System State Classification.**
2. **Discuss Concept Of Black Out.**
3. **Explain Restoration Process After Black Out.**
4. **For A Transmission Line Connected Between Two Buses, Derive The Expression Of Voltage Regulation And Also Prove From The Phasor Diagram That The Q And V Have A Strong Coupling.**

ATMIYA UNIVERSITY

Faculty of Engineering and Technology

Department of Electrical Engineering

UG Semester – VIII

Subject Code: - 18BTEECC803

Subject Name: - Power System Operation & Control

Tutorial No. : – 10

1. **Draw Block Diagram Model Of Load Frequency Control For Isolated Power System.**
2. **Explain Turbine Speed Governing System.**
3. **Explain Contingency Analysis Of Power System.**
4. **What Is Voltage Collapse? Enlist The Main Factors That Contribute The Phenomena Of Voltage Collapse.**

ATMIYA UNIVERSITY

Faculty of Engineering and Technology

Department of Electrical Engineering

UG Semester – VIII

Subject Code: - 18BTEECC803

Subject Name: - Power System Operation & Control

Tutorial No. : – 11

1. **Discuss The Sources Of Reactive Power Generation In The Power Systems.**
2. **Describe The Various Operating States Of Power Systems.**
3. **Explain Classification Of Voltage Stability.**
4. **Explain The Role Of Transformer On Voltage Control Of Power System.**
5. **Enlist Different Types Of Reactive Power Compensation Methods For Heavily Loaded And**
6. **Voltage Stressed Power Systems. Explain Static VAR Compensators In Detail.**

ATMIYA UNIVERSITY

Faculty of Engineering and Technology

Department of Electrical Engineering

UG Semester – VIII

Subject Code: - 18BTEECC803

Subject Name: - Power System Operation & Control

Tutorial No. : – 12

1. **What Is Bad Data In State Estimation? How Bad Data Are Detected And Suppress In State Estimation.**
2. **Explain Least Square Estimation In Brief.**
3. **Give Classification Based On Lead Time And Forecasting Methodology.**
4. **Explain Load Predictions For Load Forecasting.**
5. **What Do You Mean By Deregulated Power System? Discuss Its Advantages And Relative Limitations To Vertical Integrated System.**

ATMIYA UNIVERSITY

Faculty of Engineering and Technology

Department of Electrical Engineering

UG Semester – VII

Subject Code: - 18BTEECC802

Subject Name: - Power System Protection And Planning

Question Bank

1. **What Is The Primary Objective Of Designing A Power System?**
2. **Why Is It Important To Consider Load Diversity In The Design Of Power Distribution Systems?**
3. **What Are The Key Factors Considered During The Planning Phase Of A Power System?**
4. **Briefly Explain The Difference Between Short-Term And Long-Term Planning In The Context Of Power Systems.**
5. **Define The Term "Reliability" In The Context Of An Electrical Power System.**
6. **How Does Redundancy Contribute To Improving The Reliability Of A Power System?**
7. **What Is The Significance Of The SAIDI (System Average Interruption Duration Index) Metric In Measuring Power System Reliability?**
8. **How Are The Indices SAIFI (System Average Interruption Frequency Index) And CAIDI (Customer Average Interruption Duration Index) Related In Assessing Power System Reliability?**
9. **Why Is Voltage Regulation Important In The Design Of A Power Distribution System?**
10. **Explain The Concept Of Contingency In The Context Of Power System Reliability.**

ATMIYA UNIVERSITY

Faculty of Engineering and Technology

Department of Electrical Engineering

UG Semester – VII

Subject Code: - 18BTEECC802

Subject Name: - Power System Protection And Planning

Question Bank

1. **What Is The Primary Purpose Of Protective Relays In An Electrical System?**
2. **Name Two Common Causes Of Electrical Faults In Power Systems.**
3. **Define The Protective Zone In The Context Of Power System Protection.**
4. **Differentiate Between Primary And Backup Protection Relays.**
5. **Enumerate Three Types Of Electromagnetic Relays Commonly Used In Power Systems.**
6. **Briefly Explain The Operation Of An Over Current Relay.**
7. **What Is The Main Function Of A Differential Relay In Power System Protection?**
8. **Provide One Example Of An External Fault And Describe Its Potential Effects On A Power System.**
9. **Sketch A Simple Relay Schematic Symbol And Label Its Key Components.**
10. **How Does A Distance Relay Operate, And What Type Of Protection Does It Offer In A Power System?**

ATMIYA UNIVERSITY

Faculty of Engineering and Technology

Department of Electrical Engineering

UG Semester – VII

Subject Code: - 18BTEECC802

Subject Name: - Power System Protection And Planning

Tutorial No. : – 1

Design Transmission line considering Electrical Parameters.

Parameters:

Line Voltage (V): 220 KV

Frequency (F): 60 Hz

Line Length (L): 100 Km

Conductor Material: Copper

Conductor Diameter (D): 2 Cm

Spacing Between Conductors (D): 3 Meters

Assumptions:

The Transmission Line Is Lossless.

The Conductor Is Perfectly Cylindrical.

The Medium Surrounding The Conductors Is Air.

ATMIYA UNIVERSITY

Faculty of Engineering and Technology

Department of Electrical Engineering

UG Semester – VII

Subject Code: - 18BTEECC802

Subject Name: - Power System Protection And Planning

Tutorial No. : – 2

Design Transmission Line Considering Mechanical Parameters.

Given Parameters:

Voltage (V): 220 KV

Power (P): 100 MW

Operating Frequency (F): 60 Hz

Transmission Line Length (L): 100 Km

Terrain Factor (K): 0.9 (For Rough Terrain)

Safety Factor (Sf): 1.5

Mechanical Parameters:

Tension (T): 10 KN

Weight Of Conductor Per Unit Length (W): 4 Kg/m

Wind Load (W): 2 KN/m

Ice Load (I): 1 KN/m

Assumptions:

The Transmission Line Is A Three-Phase System.

The Conductor Is Made Of Aluminum.

The Specific Gravity Of Aluminum Is 2.7.

ATMIYA UNIVERSITY

Faculty of Engineering and Technology

Department of Electrical Engineering

UG Semester – VII

Subject Code: - 18BTEECC802

Subject Name: - Power System Protection And Planning

Tutorial No. : – 3

Design Transmission Tower For Different Voltage Ratings.

Assumptions:

Terrain: Flat

Environmental Conditions: Normal

Conductor Type: ACSR (Aluminum Conductor Steel Reinforced)

Design Parameters:

Conductor Size:

220 KV: ACSR 336.4 MCM

400 KV: ACSR 477 MCM

765 KV: ACSR 795 MCM

Tower Height:

220 KV: 25 Meters

400 KV: 35 Meters

765 KV: 45 Meters

Spacing Between Towers:

220 KV: 300 Meters

400 KV: 400 Meters

765 KV: 500 Meters

ATMIYA UNIVERSITY

Faculty of Engineering and Technology

Department of Electrical Engineering

UG Semester – VII

Subject Code: - 18BTEECC802

Subject Name: - Power System Protection And Planning

Tutorial No. : – 4

Calculate Size Of Distributor Based On Consideration Of Voltage Drop And Voltage Regulation.

Given Data:

Load Demand (P): 1000 KW

Power Factor (Pf): 0.8 (Lagging)

Voltage At The Sending End (Vs): 11 KV

Voltage At The Receiving End (Vr): 10.5 KV

Length Of The Transmission Line (L): 10 Km

Resistance Of The Transmission Line (R): 0.5 Ohms/Km

Reactance Of The Transmission Line (X): 1.0 Ohms/Km

Permissible Voltage Drop (ΔV): 5% Of The Sending End Voltage

ATMIYA UNIVERSITY

Faculty of Engineering and Technology

Department of Electrical Engineering

UG Semester – VII

Subject Code: - 18BTEECC802

Subject Name: - Power System Protection And Planning

Tutorial No. : – 5

Calculate Tower Footing Resistance For Different Voltage Ratings.

We Have A Transmission Line Tower With The Following Parameters:

Tower Voltage Ratings: 220 KV, 400 KV, 765 KV

Soil Resistivity (P): 150 Ohm*m

ATMIYA UNIVERSITY

Faculty of Engineering and Technology

Department of Electrical Engineering

UG Semester – VII

Subject Code: - 18BTEECC802

Subject Name: - Power System Protection And Planning

Tutorial No. : – 6

Calculate Arrester Rated Voltage, Discharge Current And Voltage For Given Systems.

Let's Consider A Transmission Line With The Following Parameters:

System Voltage (Vs): 230 KV

Surge Impedance (Zs): 400 Ohms

Lightning Overvoltage (Vl): 2.5 Pu (Per Unit)

ATMIYA UNIVERSITY

Faculty of Engineering & Technology

Question BANK

Program: **M. Tech. Electrical Engineering**	Semester: **II**
Course: **21MEEPCC201 – Advanced Power Electronics**	

1. What Is The Primary Function Of AC To AC Voltage Converters?
2. Name One Application Where AC To AC Voltage Converters Are Commonly Used.
3. Define Three-Phase AC Regulators And Provide An Example Of Their Use.
4. Explain The Concept Of Phase Angle Control In The Context Of TRIAC-Based Single-Phase AC Regulators.
5. How Does A TRIAC-Based Single-Phase AC Regulator Control The Output Voltage?
6. What Is The Significance Of Phase Angle Control In Power Electronics?
7. Briefly Describe The Working Principle Of AC To AC Voltage Converters.
8. Give An Example Of A Practical Scenario Where Three-Phase AC Regulators Are Advantageous.
9. How Does Phase Angle Control Contribute To The Regulation Of Output Voltage In TRIAC-Based Systems?
10. Name A Device Commonly Used For Phase Angle Control In AC Regulators And Briefly Explain Its Operation.
11. Explain The Fundamental Concept Of AC To AC Voltage Converters And Their Significance In Power Electronics.
12. Compare And Contrast Single-Phase And Three-Phase AC Regulators, Highlighting Their Applications And Advantages.
13. Discuss The Operating Principles Of A Three-Phase AC Regulator, Emphasizing Its Role In Controlling Alternating Current.
14. Describe The Key Components And Working Principles Involved In Phase Angle Control In TRIAC-Based Single-Phase AC Regulators.
15. Illustrate The Application Scenarios Where AC To AC Voltage Converters Are Preferred Over Other Types Of Power Converters.
16. Elaborate On The Challenges And Limitations Associated With Three-Phase AC Regulators And Potential Solutions To Address Them.
17. How Does Phase Angle Control Impact The Output Waveform In TRIAC-Based Single-Phase AC Regulators? Explain With Relevant Diagrams.
18. Explain The Fundamental Operation Of AC To AC Voltage Converters And Discuss The Key Components Involved In Their Design.
19. Compare And Contrast Single-Phase And Three-Phase AC Regulators, Highlighting Their Respective Advantages And Applications.

Atmiya University

20. Give The Concept Of Phase Angle Control In TRIAC-Based Single-Phase AC Regulators, Discussing Its Significance In Controlling Output Voltage And Current.
21. What Is The Primary Function Of A Cycloconverter?
22. Briefly Explain The Operation Of A Three-Phase To Single-Phase Cycloconverter.
23. In A Three-Phase To Three-Phase Cycloconverter, What Is The Significance Of The Control Circuit?
24. Differentiate Between Three-Phase To Single-Phase And Three-Phase To Three-Phase Cycloconverters.
25. What Role Does The Control Circuit Play In Regulating The Output Of A Three-Phase To Three-Phase Cycloconverter?
26. Explain The Basic Concept Of Cycloconverters And Their Applications.
27. Compare And Contrast Three-Phase To Single-Phase Cycloconverters With Three-Phase To Three-Phase Cycloconverters. Highlight Their Advantages And Limitations.
28. Discuss The Key Components And Operation Of The Control Circuit In Three-Phase To Three-Phase Cycloconverters. How Does The Control Circuit Contribute To The Overall Performance Of The System?

Atmiya University